NASA Technical Memorandum 4789

Flight Wing Surface Pressure and Boundary-Layer Data Report from the F-111 Smooth Variable-Camber Supercritical Mission Adaptive Wing

Sheryll Goecke Powers and Lannie D. Webb
Dryden Flight Research Center
Edwards, California

National Aeronautics and
Space Administration

Office of Management

Scientific and Technical
Information Program

1997

CONTENTS

Page

ABSTRACT 1

INTRODUCTION 1

NOMENCLATURE 2

DESCRIPTION OF EXPERIMENT 4

INSTRUMENTATION 5
- Wing-Pressure Orifices 5
- Boundary-Layer Rake 5
- Flight Deflection Measurement System 5
- Measurements 6
- Accuracy 6

ANALYSIS TECHNIQUES 6
- Pressure Data 6
- Flight Detection Measurement System 7
- Test Points 7

RESULTS AND DISCUSSION 7
- Span Effects on Pressure Distribution 8
- Mach Number Effects 8
- Camber and Angle-of-Attack Effects 8
- Camber and Angle-of-Attack Effects on Normal Force Coefficient 9
- Wing-Tip Twist Effects 9

CONCLUDING REMARKS 10

APPENDIX A: Maw Airfoil Coordinates for a Wing Sweep of 26° at Span Stations 0.93, 0.76, 0.59, and 0.40 24

APPENDIX B: General Listing of Available Wing Pressure and Boundary-Layer Data 45

APPENDIX C: Wing Pressure Coefficients for Nominal Dynamic Pressure of 300 lb/ft^2 and Mach Number of 0.60 52

APPENDIX D: Wing Pressure Coefficients for Nominal Dynamic Pressure of 300 lb/ft^2 and Mach Number of 0.70 140

APPENDIX E: Wing Pressure Coefficients for Nominal Dynamic Pressure of 300 lb/ft^2 and Mach Number of 0.80 203

APPENDIX F: Wing Pressure Coefficients for Nominal Dynamic Pressure of 300 lb/ft^2 and Mach Number of 0.85 300

APPENDIX G: Wing Pressure Coefficients for Nominal Dynamic Pressure of 300 lb/ft^2 and Mach Number of 0.90 381

APPENDIX H: Wing Pressure Coefficients for Dynamic Pressures From 300 to 800 lb/ft^2 and Mach Numbers From 0.61 to 1.41 456

APPENDIX I: Wing Pressure Coefficients for Dynamic Pressures From 80 to 300 lb/ft^2 and Mach Numbers From 0.28 to 0.59 571

APPENDIX J: Wing Pressure Coefficients for Dynamic Pressure From 250 to 800 lb/ft^2 and Mach Numbers From 0.60 to 0.90 607

APPENDIX K: Boundary-Layer Data 779

REFERENCES 849

TABLES

A-1. Full-scale wing-splash coordinates ($\delta_{LE/TE} = 0/2$, $\eta = 0.93$, $c = 9.2276$ ft) 24

A-2. Full-scale wing-splash coordinates ($\delta_{LE/TE} = 0/2$, $\eta = 0.76$, $c = 9.9413$ ft) 29

A-3. Full-scale wing-splash coordinates ($\delta_{LE/TE} = 0/2$, $\eta = 0.59$, $c = 10.8549$ ft) 31

A-4. Full-scale wing-splash coordinates ($\delta_{LE/TE} = 5/10$, $\eta = 0.76$, $c = 9.8570$ ft) 35

A-5. Design coordinates ($\delta_{LE/TE} = 0/2$, $\eta = 0.93$, $c = 9.1426$ ft) 41

A-6. Design coordinates ($\delta_{LE/TE} = 0/2$, $\eta = 0.76$, $c = 9.9827$ ft) 42

A-7. Design coordinates ($\delta_{LE/TE} = 0/2$, $\eta = 0.59$, $c = 10.8227$ ft) 43

A-8. Design coordinates ($\delta_{LE/TE} = 0/2$, $\eta = 0.40$, $c = 11.8004$ ft) 44

B. Nominal values for MINF, ALPT and QINF, with appendix letters 45

C-1. Summary of Data 52

C-2. Listing of Data 55

D-1. Summary of Data 140

D-2. Listing of Data 142

E-1. Summary of Data 203

E-2. Listing of Data 206

F-1. Summary of Data 300

F-2. Listing of Data 303

G-1. Summary of Data 381

G-2. Listing of Data 384

H-1. Summary of Data 456

H-2. Listing of Data 460

I-1. Summary of Data 571

I-2. Listing of Data 573
J-1. Summary of Data 607
J-2. Listing of Data 612
K-1. Summary of Data 779
K-2. Listing of Data 794

FIGURES

1. AFTI/F-111 MAW airplane in flight. Chordwise dark areas on the right wing indicate the four semispan locations of pressure orifices (refs. 11, 12, and 27) 11
2. The MAW smooth, variable-camber flap shape (refs. 11, 12, and 27) 11
3. Wing-splash template preparation on the AFTI/F-111 MAW airplane (ref. 16) 12
4. Wing planform and airfoil shapes at design cruise condition (ref. 11 and 16) 12
5. Semispan locations of surface-pressure orifices, boundary-layer rake, pressure instrumentation, and wingtip accelerometers for the right wing (ref. 12) 13
6. Boundary-layer rake (refs. 12 and 27) 13
7. FDMS target locations on the lower surface of the left wing (ref. 12) 14
8. Time history of typical windup turn maneuver used to obtain wing pressure, FDMS, and boundary-layer data; $M_\infty \approx 0.85$, $q_\infty \approx 300$ lb/ft^2, and $\delta_{LE/TE} = 0/2$ (ref. 12) 14
9. Steady chordwise pressure distributions at four semispan stations for $M_\infty \approx 0.85$, $q_\infty \approx 300$ lb/ft^2, and $\delta_{LE/TE} = 0/2$. No separation at $\alpha_T = 8°$ (ref. 12) 15
10. Steady chordwise pressure distributions at four semispan stations for $M_\infty \approx 0.85$, $q_\infty \approx 300$ lb/ft^2, and $\delta_{LE/TE} = 5/10$ (ref. 12) 16
11. Steady chordwise pressure distributions for large and small ranges of Mach number; $\eta = 0.76$, $q_\infty \approx 300$ lb/ft^2, and $\alpha_T = 8°$ (ref. 11) 17
12. Chordwise pressure distributions and velocity profiles for different cambers ($M_\infty \approx 0.80$, $\eta = 0.76$, and $q_\infty \approx 300$ lb/ft^2) (ref. 27) 18
13. Section normal-force coefficient as a function of α_T for different camber deflections at $M_\infty = 0.80$, $\eta = 0.76$, and $q_\infty \approx 300$ lb/ft^2 (ref. 27) 21
14. Comparison of FDMS measured wingtip delta twist with two pressure profiles for $M_\infty \approx 0.85$ and $q_\infty \approx 300$ and 600 lb/ft^2 (ref. 12) 22

ABSTRACT

Flight tests were conducted using the advanced fighter technology integration F-111 (AFTI/F-111) aircraft modified with a variable-sweep supercritical mission adaptive wing (MAW). The MAW leading- and trailing-edge variable-camber surfaces were deflected in flight to provide a near-ideal wing camber shape for the flight condition. The MAW features smooth, flexible upper surfaces and fully enclosed lower surfaces, which distinguishes it from conventional flaps that have discontinuous surfaces and exposed or semi-exposed mechanisms. Upper and lower surface wing pressure distributions were measured along four streamwise rows on the right wing for cruise, maneuvering, and landing configurations. Boundary-layer measurements were obtained near the trailing edge for one of the rows. Cruise and maneuvering wing leading-edge sweeps were 26° for Mach numbers less than 1 and 45° or 58° for Mach numbers greater than 1. The landing wing sweep was 9° or 16°. Mach numbers ranged from 0.27 to 1.41, angles of attack from 2° to 13°, and Reynolds number per unit foot from 1.4×10^6 to 6.5×10^6. Leading-edge cambers ranged from 0° to 20° down, and trailing-edge cambers ranged from 1° up to 19° down. Wing deflection data for a Mach number of 0.85 are shown for three cambers. Wing pressure and boundary-layer data are given. Selected data comparisons are shown. Measured wing coordinates are given for three streamwise semispan locations for cruise camber and one spanwise location for maneuver camber.

INTRODUCTION

The wing for a tactical fighter airplane is typically designed for a few optimum or near-optimum flight conditions such as a specific Mach number, altitude and load-factor combination, or 1-*g* cruise. However, the airplane must operate over a wide range of flight conditions. To investigate advanced wing designs, the National Aeronautics and Space Administration (NASA) and the United States Air Force (USAF) conducted a series of flight tests on an F-111A airplane. The first flight test was the Transonic Aircraft Technology (TACT) program (refs. 1 and 2), which combined a supercritical airfoil (ref. 3) with planform and twist changes to improve transonic cruise and maneuver performance relative to the conventional F-111 wing (ref. 4). The second flight test, which was the final research program conducted on the advanced fighter technology integration (AFTI)/F-111, was the mission adaptive wing (MAW) concept.

The MAW concept had a supercritical wing configuration that allowed smooth camber changes throughout the flight envelope to provide additional aerodynamic performance at all flight conditions. Previous supercritical wing designs tended toward a fixed-geometry shape, which was a compromise for specific mission requirements. The MAW design goals were to minimize penalties for off-design flight conditions through the combination of smooth skin variable camber and variable sweep (ref. 5). On airplanes such as the F-16 and F-18 aircraft, the variable camber is achieved through discrete flap positions. Better performance can be achieved with smooth variable camber. Design studies (refs. 6 and 7) to develop a smooth, variable-camber supercritical wing resulted in the MAW. The MAW consists of leading- and trailing-edge variable-camber surfaces that can be deflected in flight to provide a near-ideal wing camber shape for any flight condition. These variable-camber surfaces feature smooth, flexible upper surfaces and fully enclosed lower surfaces, distinguishing them from conventional flaps that have discontinuous surfaces and exposed or semi-exposed mechanisms. The camber shape is controlled by either a manual or automatic flight control system (ref. 8).

The wing and aircraft were extensively instrumented to evaluate the aerodynamic performance of the MAW (refs. 9 and 10). Instrumentation for defining the wing characteristics included surface-pressures orifices, a boundary-layer rake, and a flight deflection measurement system (FDMS). The MAW was flown on the AFTI/F-111 in a joint NASA/USAF/Boeing Advanced Systems (Seattle, Washington) flight research program at the NASA Dryden Flight Research Center (DFRC).

Results from the MAW program were summarized at the symposium held at NASA DFRC in April 1989 (ref. 5). Aerodynamic characteristics and performance evaluations such as wing-pressure results, buffet results, and lift and drag have been discussed in separate subdiscipline reports (refs. 11–15). The data indicate that, compared to the basic F-111A and TACT designs, the AFTI/F-111 MAW aircraft significantly improved aerodynamic characteristics.

The primary goal of this paper is to document wing pressure and boundary-layer data obtained during the MAW flight program. The data are selected from stable or near-stable flight conditions for cruise, maneuvering, and landing configurations. The cruise and maneuvering data for Mach numbers less than 1 are at a wing leading-edge sweep of 26°. For Mach numbers greater than 1, the wing sweeps are 45° or 58°. The landing wing sweeps are 9° or 16°. The Reynolds number per unit foot (RNPU) is from 1.4×10^6 to 6.5×10^6. Mach numbers range from 0.27 to 1.41 for the wing surface-pressure data and from 0.48 to 0.95 for the boundary-layer data. Leading-edge cambers range from 0° to 20° down, and trailing-edge cambers range from 1° up to 19° down. Angles of attack varied from 2° to 13°, and dynamic pressures ranged from 80 to 800 lb/ft^2.

The wing-pressure distributions are from four chordwise rows, and the boundary-layer profiles are from near the trailing edge of one of the pressure rows. Plots of representative data near the design Mach number are shown and discussed. The wing-twist deflection data (three cambers at a Mach number of 0.85), which were presented in reference 12, are also included in this report. Computational fluid dynamics comparisons with MAW flight data are presented in references 11 and 16. Flight wing-pressure distributions are also compared with MAW wind-tunnel data and with TACT flight data in reference 11.

NOMENCLATURE

The values in brackets, [ ], which are based on a trapezoidal planform with an aspect ratio of 5.14 and a leading-edge sweepback angle of 26° scaled up, are from reference 17.

AFTI	advanced fighter technology integration
ALPT	wing reference angle of attack, $\alpha + \Delta\alpha$, deg
b	wing span, ft [56.55 ft]
Beta or BETA	aircraft angle of sideslip, deg
c	streamwise local chord for sweepback angle of 26°, ft
c_{av}	mean geometric chord, $\dfrac{\text{wing reference area, ft}^2}{\text{wing span, ft}}$ [11.0 ft]
c_{MAC}	mean aerodynamic chord, $(2/S)\int_0^{b/2} c^2 dy$ [11.2 ft]
c_n	section normal force coefficient, $\int_0^1 (\Delta C_p)\, d(x/c)$
C_p	pressure coefficient, $(p - p_\infty)/q_\infty$
$C_p{}^*$	critical pressure coefficient, $\left(\dfrac{2}{\gamma M_\infty^2}\right)\left[\left(\dfrac{2 + (\gamma - 1)M_\infty^2}{\gamma + 1}\right)^{\gamma/(\gamma-1)} - 1\right]$

$C_{p_{L.S.}}$	pressure coefficient on wing lower surface
$C_{p_{T.E.}}$	pressure coefficient on wing upper surface at $x/c = 0.96$
$C_{p_{U.S.}}$	pressure coefficient on wing upper surface
CN	section normal force coefficient, $\int_0^1 (\Delta C_p) d(x/c)$
$CNWP$	wing normal force coefficient calculated using CN values
CP	pressure coefficient, $(p - p_\infty)/q_\infty$
DFRC	Dryden Flight Research Center
FDMS	flight deflection measurement system
H	altitude, ft
$L.S.$	lower wing surface
LOC	chord location
M_∞	free-stream Mach number
MAW	mission adaptive wing
MINF	free-stream Mach number
$MTOP$	local Mach number for boundary-layer rake at $Y = 5$ in.
NASA	National Aeronautics and Space Administration
p	local wing surface static pressure, lb/ft^2
p_∞	free-stream static pressure, lb/ft^2
PCM	pulse code modulation
$PSUR$	local surface static pressure for boundary-layer rake at $x/c = 0.96$ for $\eta = 0.76$, lb/ft^2
q_∞	free-stream dynamic pressure, lb/ft^2
QINF	free-stream dynamic pressure, lb/ft^2
RNPU	Reynolds number per unit foot, ft^{-1}
S	wing reference area, ft^2 [622.0 ft^2]
TACT	Transonic Aircraft Technology
THETA	momentum thickness, $\int_0^{\delta, b} \frac{\rho U}{\rho_e U_e}\left(1 - \frac{U}{U_e}\right) dy$, in.
$TINF$	free-stream temperature, °F
U	chordwise component of local velocity, ft/sec
U_e	chordwise component of local velocity at $Y = 5$ in. and $x/c = 0.96$ for $\eta = 0.76$, ft/sec
U.S.	upper wing surface
USAF	United States Air Force
UTOP	chordwise component of local velocity at $Y = 5$ in. and $x/c = 0.96$ for $\eta = 0.76$, ft/sec
W	spanwise component of local flow velocity, positive outboard direction, ft/sec
x	local streamwise coordinate (from wing leading edge) for sweepback angle of 26°, ft

x/c	fraction of local streamwise chord (wing)
Y	perpendicular distance above upper wing surface, in.
y	spanwise coordinate, ft
z	vertical component, ft
z/c	nondimensional vertical component
α	indicated angle of attack corrected to wing reference plane, deg
$\alpha'_{n_{wt}}$	dynamic response of normal acceleration at wingtip, g
α_T	wing reference angle of attack, $\alpha + \Delta\alpha$, deg
β	aircraft angle of sideslip, deg
γ	ratio of specific heats (1.4 for this study)
$\Delta\alpha$	angle-of-attack correction for pitch and upwash effects, deg
δ, b	boundary-layer thickness, in.
$\delta_{LE/TE}$	leading- and trailing-edge camber deflection, down is positive, deg
$\delta_{LE/I/M/O}$	leading-edge camber deflection/(inboard/midspan/outboard trailing-edge flap deflections), down is positive, deg
η	orifice row semispan locations, $2y/b$
θ	local wing-twist angle, deg
ρ	air density, slug/ft^3
ρ_c	air density at edge of boundary layer, slug/ft^3

DESCRIPTION OF EXPERIMENT

Figures 1 and 2 show the AFTI/F-111 MAW airplane and camber shape of the wing. The airplane was initially an F-111A airplane that had its wings replaced for the TACT/F-111 program (ref. 1). The TACT wing, except for the wing box, was subsequently replaced with the MAW. Modifications (ref. 18) were made to the TACT wing planform to accommodate the installation of the smooth skin leading- and trailing-edge variable-camber systems. Figure 2 shows the variable-camber leading- and trailing-edge surfaces of the MAW, specifically, the flex panels for the upper surfaces and the fixed-geometry (nonflexing) surfaces for the lower surfaces. (Note that the positive direction is down.)

Three wing-splash templates were made to obtain the constructed wing geometry at semispan locations (η) of 0.93, 0.76, and 0.59 (which correspond to pressure orifice rows) for a leading- and trailing-edge camber ($\delta_{LE/TE}$) of 0/2. One wing splash was made at $\eta = 0.76$ for $\delta_{LE/TE} = 5/10$. Figure 3 shows a template fitted on a streamwise airfoil section of the MAW. A discussion of the template construction technique and the method used to obtain the wing coordinates from the template is found in reference 16. Appendix A lists the wing coordinates from the templates and the wing design coordinates from 1/12 scale wind-tunnel model. The design coordinates are from reference 17. Figure 4 shows airfoil shapes of the MAW model for a wing sweep of 26° and $\delta_{LE/TE} = 0/2$ (refs. 11 and 16). Tables A-1 through A-3 list the as-built coordinates determined from the wing splashes for $\delta_{LE/TE} = 0/2$ at $\eta = 0.93$, 0.76, and 0.59. Table A-4 lists the as-built coordinates for $\delta_{LE/TE} = 5/10$ at $\eta = 0.76$. The final MAW wing design coordinates (ref. 17), which were for a 1-g cruise condition at a leading-edge wing sweepback of 26° and $\delta_{LE/TE} = 0/2$, are listed in tables A-5 through A-8. The as-built coordinates for $\delta_{LE/TE} = 0/2$ and $\eta = 0.76$ are compared with the corresponding design coordinates in reference 16. This comparison indicates significant differences on the upper surface for x/c of 0.50 to 0.70, where x/c is the ratio of chordwise distance from leading edge

to chord. The maximum disagreement, at $x/c = 0.61$, corresponds to a 0.24-in. difference between the design and full-scale measurements. This comparison required a rotation of the design airfoil to account for the local twist angle of $\theta = 5.279°$. This rotation was accomplished by using the two-dimensional direction-cosine transformation of Euler angles: x rotated $= x \cos\theta + z \sin\theta$, and z rotated $= z \cos\theta - x \sin\theta$.

INSTRUMENTATION

Wing-Pressure Orifices

For this study, the pressure instrumentation was located on the right wing of the AFTI/F-111 airplane (fig. 5). A detailed discussion of the static pressure instrumentation is found in reference 19. There were 152 flush-surface static pressure orifices located on the upper and lower surfaces in four chordwise rows aligned with the free-stream airflow at a leading-edge sweepback angle of 26°. Figure 5 shows the number of upper and lower orifices at each semispan station. Nine of the 10 pressure transducer boxes were located inside the flexible leading- and trailing-edge flap surfaces, a fact which required connecting the leading- and trailing-edge surfaces with a flexible fluoro-silicon tubing (0.07 in. inside diameter). The orifices located on the surface of the wing box were connected by stainless-steel tubing (0.12 in. inside diameter). In most cases, the length of the pressure lines from the orifices to the transducers was limited to less than 5 ft, thus minimizing pressure lag effects. Individual differential pressure transducers (± 3 lb/in^2) mounted in the 10 boxes were used to measure the differential pressure between the wing-surface orifices and the reference pressure. A temperature-controlled variable-capacitance absolute pressure (0 to 2200 lb/ft^2) transducer (labeled reference transducer in figure 5) measured the reference pressure.

Boundary-Layer Rake

The 36-probe flow-direction boundary-layer rake was installed on the upper-wing surface at $\eta = 0.76$ (see figs. 5 and 6). The leading edge of the center probes was at $x/c \cong 0.96$, where x is the streamwise coordinate and c is the streamwise local chord for a wing sweep of 26°. Three impact pressures were measured at each probe height. For 3 flights, 31 upper surface orifice transducers from rows $\eta = 0.76$ and 0.59 and 5 spare wing transducers were connected to the boundary-layer rake shown in figure 6. Local flow direction was calculated using the pressures from the two side probes (cut at 45°) and the calibration technique in reference 20. Because of transducer problems, the pressures at $Y = 0.03$ in. and 4.47 in. (see fig. 6) were not measured.

Flight Deflection Measurement System

The electro-optical FDMS used in this study (refs. 10 and 12) was an updated version of an earlier system (refs. 21 and 22). The MAW FDMS consisted of a control unit, a receiver, a target driver, and 13 infrared light-emitting-diode targets (fig. 7). The targets were mounted on points of structural interest on the lower surface of the left-hand wing. The receiver was mounted behind a window panel in the left side of the fuselage below the wing. From this receiver location, all targets could be viewed for all camber settings when the wing was swept to 26°.

The control unit commanded the target driver to momentarily energize each target in order. Before each target was illuminated, the control unit initiated a sequence within the receiver that involved clearing its linear diode array, scanning the array to sample the background light signature, and scanning again with the target on. This process was necessary to accomplish the automatic background light compensation. References 10 and 23 provide more comprehensive information on the FDMS.

Measurements

Free-stream flight parameters, Mach number (M_∞), static pressure (p_∞), dynamic pressure (q_∞), wing reference angle of attack (α_T), and sideslip angle (β) were measured and derived from sensors installed on the AFTI/F-111 airdata boom. Mach number data from a modified MA-1 type uncompensated pitot-static probe (ref. 24) were corrected for position error. Angle of attack and sideslip angle were measured using a flight-path accelerometer vane system (ref. 25). Angle of attack is referenced to the wing reference plane for consistency with the wind-tunnel data. Because the noseboom is canted 2.5° down relative to the vehicle body axis and the MAW is set to an angle 1° up relative to the vehicle body axis, a 3.5° correction was added to the indicated vane angle of attack to obtain the indicated angle of attack, α. This α was corrected for pitch and upwash effects (ref. 14) to obtain α_T. Corrections for boom bending were considered unnecessary because of the rigidity of the boom. This corrected angle of attack was used for the wing-pressure data analysis.

All the instrumented parameters were recorded digitally on an airborne pulse code modulation (PCM) system. The PCM system had a sampling rate of 20 to 800 samples/sec. Each of the wing surface and boundary-layer pressures were sampled at 20 samples/sec. The system sampling rate for each FDMS target was 12.5 samples/sec.

Accuracy

Based on the repeatability of checkpoints used in the airspeed calibration, the accuracy of the corrected values of M_∞ is estimated to be the same as that for the TACT program, ±0.005 (ref. 1). The corrected values of angle of attack and angle of sideslip have an estimated accuracy of ±0.25° (ref. 1). The uncertainty in the determination of C_p is a function of the uncertainties in q_∞, p_∞, and p. The uncertainty in p is a function of the individual differential pressure transducer and the absolute reference transducer. The transducer range for the individual differential pressure transducers was ±3 lb/in^2. The range for the absolute reference pressure transducer was 0–2200 lb/ft^2. For the data in this report, Mach number ranges from 0.27 to 1.41 and dynamic pressure ranges from 80 to 810 lb/ft^2. However, the majority of the data were obtained for Mach numbers of 0.60, 0.70, 0.80, 0.85 and 0.90 and a dynamic pressure near 300 lb/ft^2, which corresponds to a nominal altitude of 32,000 ft. The uncertainty in C_p was calculated for these latter conditions using the method of standard deviation outlined in reference 26. Estimated uncertainties in the parameters were ±4.8 lb/ft^2 for p, ±1.3 lb/ft^2 for p_∞, and ±0.005 for M_∞. Using these standard deviations resulted in a standard deviation of ±0.02 for C_p These uncertainties in C_p occurred for trim flight conditions and during wind-up turns where quasi-stable values of angle of attack, M_∞, and altitude are maintained. The standard deviation for data would be slightly less at dynamic pressures higher than 300 lb/ft^2 and slightly more at dynamic pressure lower than 300 lb/ft^2.

ANALYSIS TECHNIQUES

Each time segment for the pressure, boundary-layer and FDMS data is for one point in time; in other words, the data were not averaged for a time period. Thus the data for a given time, for example 9:34:25.500, represent a snapshot of conditions at that time.

Pressure Data

To minimize concerns about pressure and sampling lag, the data used for the surface and boundary-layer pressures were chosen from stabilized and quasi-stabilized flight conditions. When selecting data for analysis, maximum deviations from the stabilized and quasi-stabilized flight conditions were 0.01 for M_∞ and 0.25° for α_T. For the boundary-layer data, the Mach number and velocity calculations used the assumptions that the local static pressure was constant through the boundary layer and that total temperature was constant through the boundary layer

and equal to the free-stream value. The local static pressure for the boundary-layer data, PSUR, was the surface static pressure at $x/c = 0.96$ (directly ahead of the rake).

Flight Detection Measurement System

The data used for the FDMS analysis were from left-hand turns so that the lighted targets were against a darkened background (dark compared to the sky). This contrast provided an optimum working environment for the optical measurement system. Most of the data were obtained for stabilized or quasi-stabilized conditions.

Test Points

Flight data presented in this paper are for Mach numbers from 0.27 to 1.41 for the wing surface-pressure data and from 0.48 to 0.95 for the boundary-layer data. The wing-twist deflection data are for a Mach number of 0.85. Leading-edge cambers range from 0° to 20° down, trailing-edge cambers range from 1° up to 19° down, and angles of attack range from 2° to 13°. Free-stream dynamic pressures range from 100 lb/ft^2 to 800 lb/ft^2. The majority of the data were at 300 lb/ft^2 or 600 lb/ft^2. All the boundary-layer and FDMS data and most of the wing surface-pressure data are for a wing sweep of 26°. There are also wing surface-pressure data for wing sweeps 9°, 16°, 45° and 58°. Flight RNPU ranged from 1.4×10^6 to 6.5×10^6. Data for both the wing pressure and boundary-layer were selected for analysis, in most cases, for angles of sideslip near 0°. Appendices B through K contain the data from the wing pressure and boundary-layer studies in table format. An overview of the available wing pressure and boundary-layer data is given in Appendix B where the wing camber and the nominal flight conditions for Mach number, dynamic pressure, and angle of attack are listed. Appendix B also serves as an index to the wing-pressure data in Appendix C through Appendix J. All the boundary-layer data are in Appendix K. The boundary-layer data are limited to a maximum trailing-edge down camber of 7° because the flow was separating at the trailing edge for cambers exceeding 7° down. The boundary-layer rake was not designed to measure separated flows.

To minimize concerns about pressure and system lag, wing pressure and boundary-layer data for the different angles of attack were obtained during slow controlled windup turns. The aircraft was stabilized at the desired Mach number and altitude before entering the windup turn. During an ideal slow windup turn, the aircraft was stabilized for a few seconds or longer at each desired Mach number and angle of attack combination. Because of thrust limitations, it was not possible to hold altitude and Mach number constant at the higher angles of attack (>8°) or flap settings. To correlate the FDMS and pressure data, the FDMS system data were obtained during the pressure maneuvers.

Figure 8 illustrates the slow windup turn maneuver and the response of one pressure transducer and the dynamic response of a wing-tip accelerometer. During the initial portion of this particular maneuver, the pilot was adjusting altitude to achieve the desired conditions later in the maneuver. The initial part of the maneuver was unsteady in nature but developed into a steady turn culminating at around 80 sec at the maximum aim angle of attack and dynamic pressure values, and with the Mach number held constant. The wing pressure, boundary-layer, and FDMS data were gathered using this type of windup turn. Soon after reaching the desired conditions, the onset of separation was indicated by the traces for the wing-tip accelerometer and the trailing-edge pressure orifice at $x/c = 0.96$ and $\eta = 0.93$, and the maneuver was terminated.

RESULTS AND DISCUSSION

As can be seen in Appendices B through K, an extensive database was obtained. The purpose of this report is to document the available data, so only a few results are presented in graphical form. The results presented in this section were previously presented in references 11, 12, or 27.

Span Effects on Pressure Distribution

In figure 9 (ref. 12), the chordwise C_p distributions as a function of x/c are shown at the four semispan stations for $M_\infty = 0.85$, $q_\infty \approx 300$ lb/ft^2, $\delta_{LE/TE} = 0/2$ (baseline camber configuration), and $\alpha_T = 8°$ and 10°. These two angles of attack were selected to show the effects of trailing-edge flow conditions on the pressure profiles. The critical pressure coefficient ($C_p{}^*$), the pressure coefficient corresponding to when the local Mach number equals 1, is also shown. The $\alpha_T = 8°$ data have good pressure recovery at the trailing edge, and the midspan profiles are typical of supercritical airfoils (ref. 7) at or near the wing design conditions. All the upper surface-pressure profiles have a strong negative pressure peak at the leading edge; however, for the midspan rows ($\eta = 0.59$ and 0.76) for $\alpha_T = 8°$, the peak is followed by nearly constant C_p plateaus. For $\alpha_T = 8°$, the C_p profiles shock down from near $x/c \cong 0.40$ at $\eta = 0.93$ to $x/c \cong 0.70$ at $\eta = 0.40$. Following the aft shocks, the C_p values indicate a region of recompression that continues to the trailing edge. At the trailing edge, the pressures show good recovery for all the semispan stations. The C_p profiles for $\alpha_T = 10°$ also show strong leading-edge negative pressure peaks. The midspan C_p plateaus disappear with the forward movement of the aft shock consequent to the separation of the boundary layer at the trailing edge. The shading on the trailing edge of the wing represents an approximate region of separated flow determined by analysis of the chordwise C_p profiles for $\alpha_T = 10°$.

Figure 10 (ref. 12) illustrates the C_p profiles for $\delta_{LE/TE} = 5/10$ and the same Mach number and angles of attack as the C_p profiles in figure 5. The critical pressure coefficient is also shown. The leading-edge camber of 5° produces a rounded leading-edge C_p profile. The midspan C_p profiles are semiflat followed by aft shock recompression near the trailing-edge flap line ($x/c \cong 0.70$). The wing-tip row ($\eta = 0.93$) is similar except for the large negative pressure area aft of the trailing-edge flap line, resulting in a large secondary velocity peak. As shown in figure 9, the aft shock moves toward the leading edge as α_T was increased to 10°. The larger trailing-edge deflection angle and angle of attack, both 10°, combine to increase the approximate region of separated flow shown, which is indicated by the shaded area.

Mach Number Effects

Figure 11 (ref. 11) compares the upper- and lower-surface C_p distributions at $\eta = 0.76$, $\alpha_T = 8°$ and $\delta_{LE/TE} = 0/2$ for large and small changes in Mach number. Figure 11(a) illustrates the development and rearward movement of the expected shock in the upper surface C_p distributions with increasing Mach number ($M_\infty = 0.60$, 0.80, 0.85, to 0.90). For $M_\infty = 0.85$, the flattop supercritical pressure profile has developed. The lower surface C_p distributions show small changes with increasing Mach number. Figure 11(b) compares the C_p distribution for small changes in Mach number. This comparison illustrates the sensitivity of the C_p distributions to Mach number near the wing design cruise Mach number of 0.85. The flight data for the wing design cruise condition of $M_\infty = 0.85$, $\alpha_T = 5.6°$ and an altitude of 35,000 ft ($q_\infty \approx 250$ lb/ft^2) are found in Appendix J. The four sets of data shown in figure 11(b) are all from the same flight test maneuver, during which the target Mach number was 0.85. The actual flight Mach numbers were $M_\infty = 0.844$, 0.852, 0.855 to 0.861. The critical pressure coefficient for $M_\infty = 0.85$ is also shown. This excellent agreement in the pressure distributions forward of $x/c = 0.5$ indicates that the respective angles of attack have been matched to identical values. This fact means that the shock movement in the upper surface C_p distributions, rearward with each small increase in M_∞, is caused by the small variation in Mach number (ref. 28). As expected, the separation between the shock locations is relatively proportional to the difference between the M_∞ values. This sensitivity can be shown for differences in M_∞ as small as 0.003 for this maneuver.

Camber and Angle-of-Attack Effects

Figure 12 (ref. 27) shows the boundary-layer velocity profiles near the trailing edge and their associated pressure distributions for $\eta = 0.76$. The critical pressure coefficient is also shown with the pressure distribution data. These

data are for four cambers at $M_\infty = 0.80$ and angles of attack between 6° and 12°. The velocity profiles for $\alpha_T = 6°$ and $\delta_{LE/TE} = 0/2$, 5/2, and 10/2 are in good agreement (fig. 12(a)). The profile for $\delta_{LE/TE} = 0/2$ shows larger losses; thus, the momentum thickness and associated momentum loss are larger. The pressure distributions in figure 12(b), except for $\delta_{LE/TE} = 5/6$, exhibit characteristics similar to the profiles discussed in figures 9–11. The pressure distributions for $\delta_{LE/TE} = 5/6$ and 10/2 show the most aft shock location. The pressure distribution for $\delta_{LE/TE} = 5/6$ has a secondary velocity peak near $x/c \cong 0.65$. All the cambers show good trailing-edge recovery.

Figures 12(c) and 12(d) show the data for $\alpha_T = 8°$. The velocity profile for $\delta_{LE/TE} = 0/2$ is similar to the $\alpha_T = 6°$ profile in figure 12(a). The remaining profiles show larger losses than for $\alpha_T = 6°$. The velocity profile for $\delta_{LE/TE} = 5/6$ indicates that flow separation is imminent. In figure 12(c), the pressure plateaus for all the distributions are more fully developed then for the $\alpha_T = 6°$ case, and the aft shocks have moved rearward. The two trailing-edge cambers, $\delta_{TE} = 2°$ and 6°, illustrate the effect on the movement of the aft normal shock with trailing-edge deflection. For all four cambers, however, the trailing-edge pressure recovery indicates no separation (fig. 12(d)).

Figures 12(e) and 12(f) present only C_p data for $\alpha_T = 10°$ and 12° because the velocity profiles showed that separated flow existed near the trailing edge for all cambers. The pressure plateaus begin to weaken for the $\alpha_T = 10°$ data (fig. 12(e)) and lose their well-defined shape for the $\alpha_T = 12°$ data (fig. 12(f)). The pressure distributions also indicate that separated flow exists at the trailing edge. For $\alpha_T = 12°$, the slope in the C_p data indicates that separated flow could exist from $x/c \cong 0.7$ to the trailing edge (fig. 12(f)).

Camber and Angle-of-Attack Effects on Normal Force Coefficient

Figure 13 (ref. 27) shows sample section normal-force coefficients, c_n, at a Mach number of 0.80 for a range of angle of attack at $\eta = 0.76$ and for several $\delta_{LE/TE}$ values. Figure 13(a) compares the c_n characteristics for the three leading-edge surface deflections of $\delta_{LE/TE} = 0/2$, 5/2, and 10/2. Curves for the data at $\delta_{LE/TE} = 0/2$ and $\delta_{LE/TE} = 5/2$ are almost identical for the higher angles of attack. The $\delta_{LE/TE} = 10/2$ c_n levels for $\alpha_T > 8°$ are slightly lower than for $\delta_{LE/TE} = 0/2$ and $\delta_{LE/TE} = 5/2$. For $\alpha_T = 10°$, the c_n for $\delta_{LE/TE} = 10/2$ is approximately 7 percent lower. In general, the data for these conditions show that, with increasing angle of attack, lift decreases as the leading-edge camber deflects to 10°.

Figure 13(b) compares the c_n characteristics for the trailing-edge surface deflections of $\delta_{LE/TE} = 10/10$, 10/18, and 5/15. The c_n characteristics for cambers of $\delta_{LE/TE} = 0/2$ and 10/2 are shown as reference values for comparison with figure 13(a). (Note the change in c_n scale between figure 13(a) and 13(b).) As expected for a given angle of attack, c_n increases with increasing trailing-edge surface deflection. The camber $\delta_{LE/TE} = 5/15$ data (dashed line) provide some data for medium and large trailing-edge deflections (ref. 29). Figures 13(a) and 13(b) indicate the benefits of judiciously selecting leading- and trailing-edge camber deflections. The variation in total aircraft drag caused by the change in camber is discussed in references 30 and 31.

Wing-Tip Twist Effects

The incremental change in wing-tip twist caused by load (wing-tip delta twist) was calculated as the difference between the changes in deflections of the forward and aft wing-tip targets. This wing-tip delta twist is the incremental twist caused by load, not the total twist. Figure 14(a) (ref. 12) shows the wing-tip delta twist, in degrees, as a function of free-stream dynamic pressure for three camber settings at a Mach number of 0.85. The trailing-edge uptwist is negative. The close agreement between the data for $\delta_{LE/TE} = 0/2$ and $\delta_{LE/TE} = 10/2$ shows that the effect of leading-edge camber on wing twist is insignificant compared to the effect of trailing-edge camber. The

FLEXSTAB predictions reported by Nelson in reference 32 show the same trend. Only one data point was available for $\delta_{LE/TE} = 5/10$, $q_\infty \approx 600$ lb/ft^2. The vertical spread in the groups of measured wing-tip twists is caused by the variation in aircraft angle of attack. For a given dynamic pressure and Mach number, an increase in angle of attack causes a corresponding increase in load factor, which in turn directly affects the wing-tip delta twist. Thus, an increase in aircraft angle of attack causes more negative wing-tip twist, which is also referred to as washout. The resulting local angle of attack that the wing-tip experiences is therefore less than the aircraft angle of attack for a positive normal acceleration maneuver.

Figures 14(b) and 14(c) compares wing surface-pressure profiles at two span locations ($\eta = 0.93$ and 0.76) at $M_\infty = 0.85$, $\alpha_T = 8°$, $\delta_{LE/TE} = 0/2$, and $q_\infty \approx 300$ and 600 lb/ft^2. The wing-tip delta twist is only 0.5° for $\delta_{LE/TE} = 0/2$, a fact that suggests that large effects would not be anticipated for the two dynamic pressures investigated. In figure 17, the wing-twist effects, if any, are minimal at the inboard row location, and the outboard row shows only a small difference in the twist at the wing-tip for the two dynamic pressures.

CONCLUDING REMARKS

This report presented selected results from the wing-surface and boundary-layer pressures and the FDMS for the AFTI/F-111 MAW aircraft flight program, primarily for conditions near the wing design Mach number. The pressure data represent a very small portion of the data available from the MAW program. Extensive tables listing wing-pressure and boundary-layer data are included in this report for cruise, maneuvering, and landing wing cambers; from Mach 0.27 to Mach 1.41; angles of attack from 2° to 13°; and dynamic pressures from 80 to 800 lb/ft^2. Leading-edge cambers ranged from 0° to 20° down and trailing-edge cambers ranged from 1° up to 19° down. The wing-pressure orifices were aligned with the free-stream flow for a wing sweep of 26°. Wing-pressure data were also obtained at wing sweeps of 9°, 16°, 45°, and 56°. For these wing sweeps, the wing-pressure orifices were not aligned with the free-stream flow. The data provide a large research base for further analysis on smooth variable-camber airfoils. Measured wing coordinates are also given for three streamwise semispan locations for the cruise camber and one spanwise location for a maneuver camber. Results indicate

- The pressure profiles had a distribution typical of a supercritical airfoil for the $\delta_{LE/TE} = 0/2$ and $\delta_{LE/TE} = 5/10$ cambers investigated in this paper. The midspan pressure profiles for both cambers illustrate the nearly constant upper surface-pressure coefficient plateaus expected for supercritical wings. The wing-tip twist measurements provide insight into how dynamic pressures for positive normal accelerations affect the wing-tip pressure profiles.
- The movement of the shock location on the upper surface of the wing chord is shown for large and small changes in Mach number. These shock locations are very sensitive to small changes in Mach number near a free-stream Mach number of 0.85.
- The section normal-force coefficients for Mach 0.80 show that as angle of attack increases, an increase in the leading-edge deflection produces a slight decrease in lift, but an increase in the trailing-edge flap deflection results in an increase in lift.
- The boundary-layer velocity profile data revealed that the flow near the trailing edge for a Mach 0.80 and dynamic pressure of 300 lb/ft^2 separated for 10° and higher angles of attack. The wing-pressure data supported these results.

Dryden Flight Research Center
National Aeronautics and Space Administration
Edwards, California, April 29, 1996

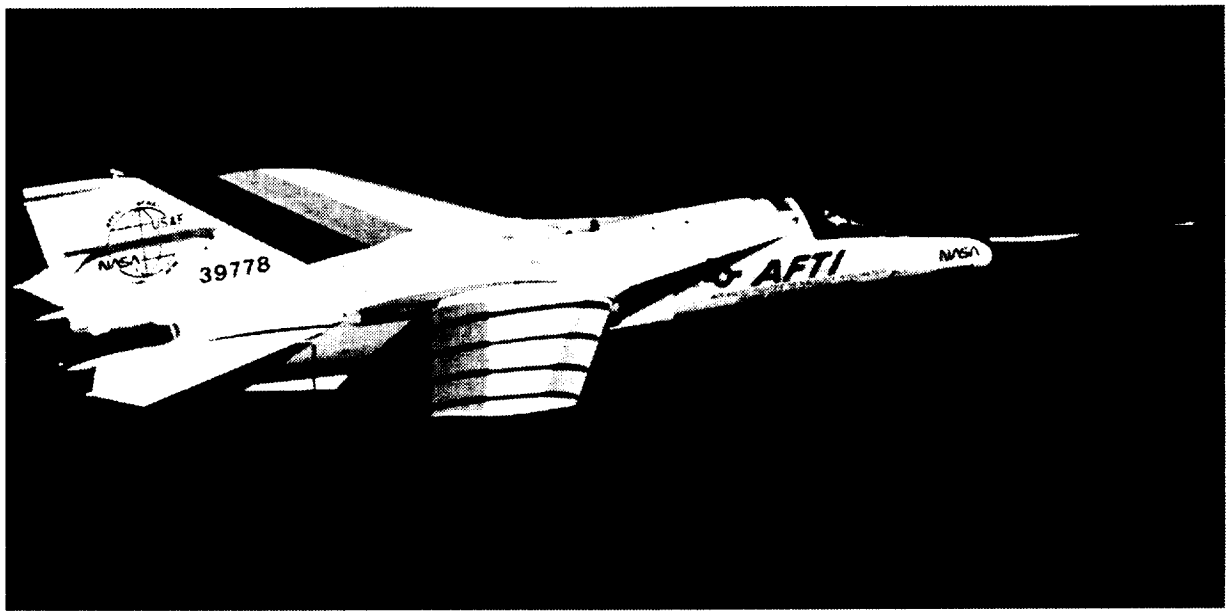

EC85 33205-017

Figure 1. AFTI/F-111 MAW airplane in flight. Chordwise dark areas on the right wing indicate the four semispan locations of pressure orifices (refs. 11, 12, and 27).

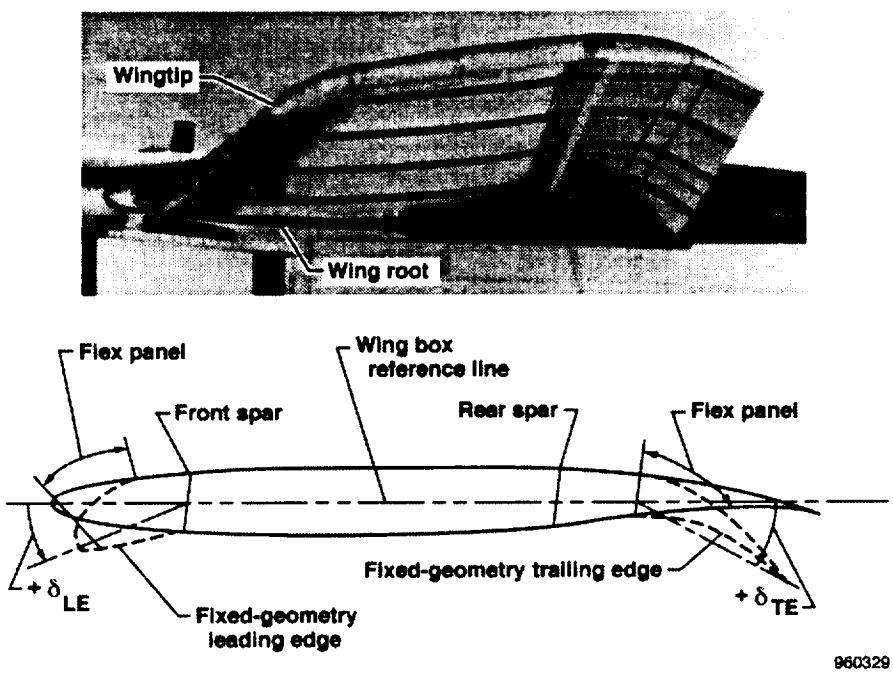

Figure 2. The MAW smooth, variable-camber flap shape (refs. 11, 12, and 27).

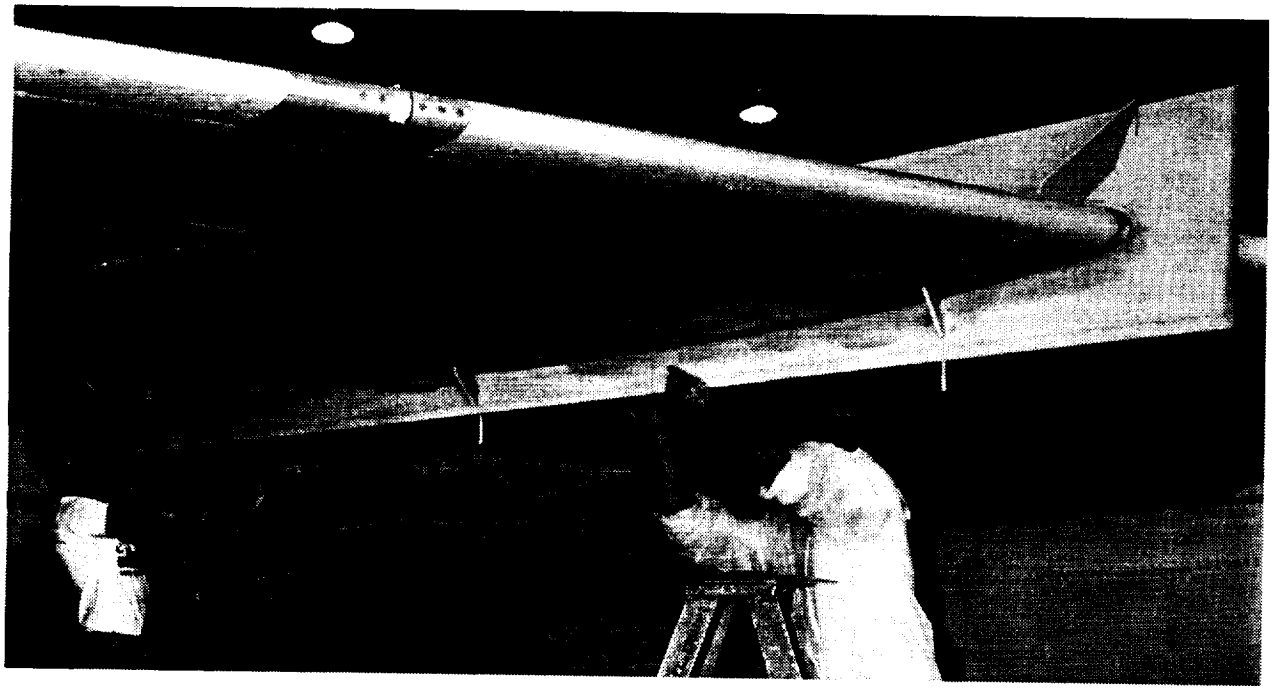

E89 0208-004

Figure 3. Wing-splash template preparation on the AFTI/F-111 MAW airplane (ref. 16).

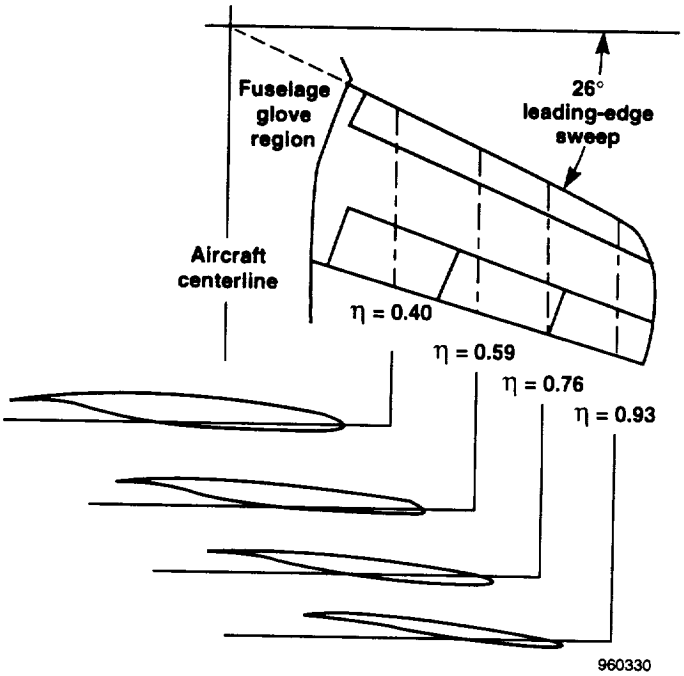

Figure 4. Wing planform and airfoil shapes at design cruise condition (ref. 11 and 16).

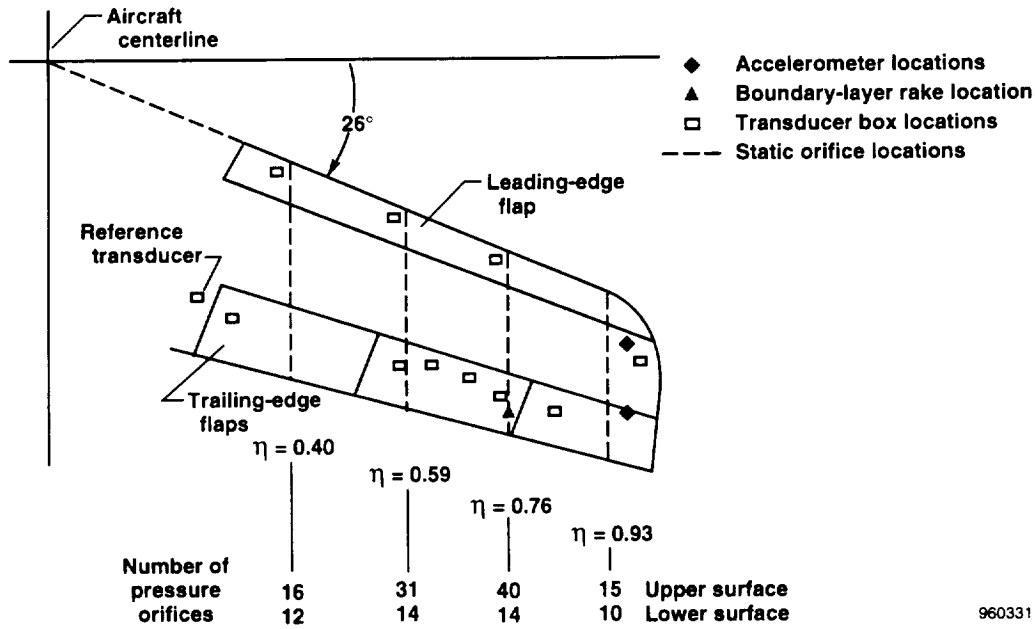

Figure 5. Semispan locations of surface-pressure orifices, boundary-layer rake, pressure instrumentation, and wingtip accelerometers for the right wing (ref. 12).

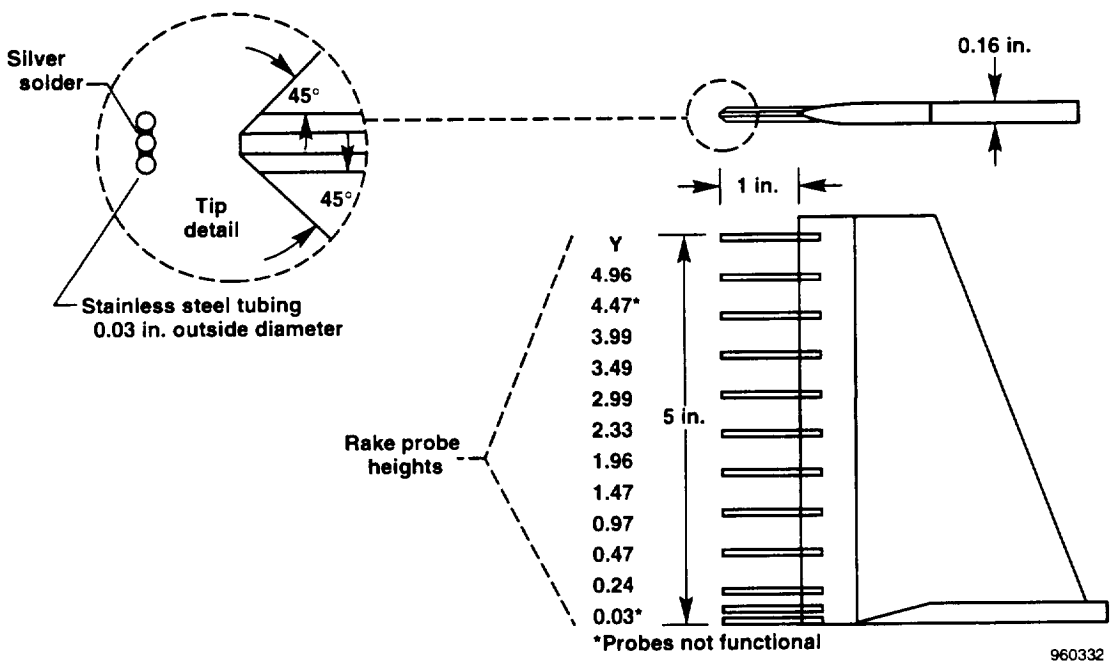

Figure 6. Boundary-layer rake (refs. 12 and 27).

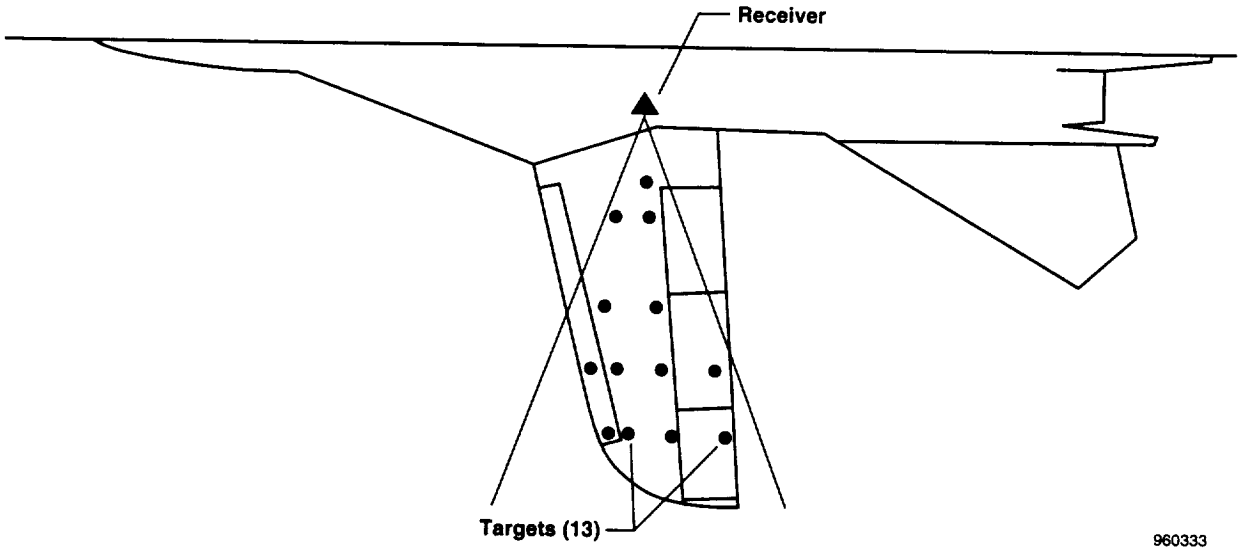

Figure 7. FDMS target locations on the lower surface of the left wing (ref. 12).

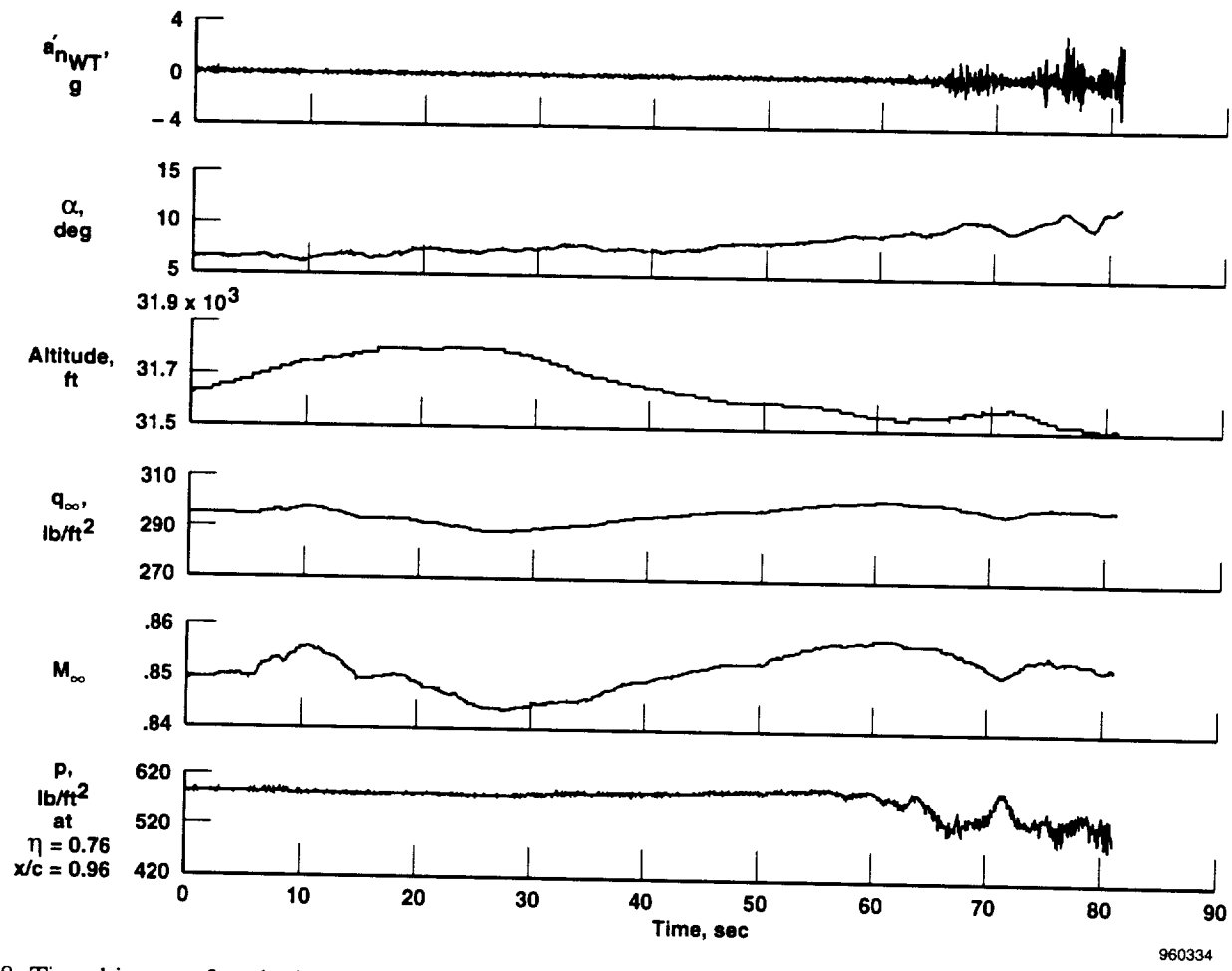

Figure 8. Time history of typical windup turn maneuver used to obtain wing pressure, FDMS, and boundary-layer data; $M_\infty \approx 0.85$, $q_\infty \approx 300$ lb/ft^2, and $\delta_{LE/TE} = 0/2$ (ref. 12).

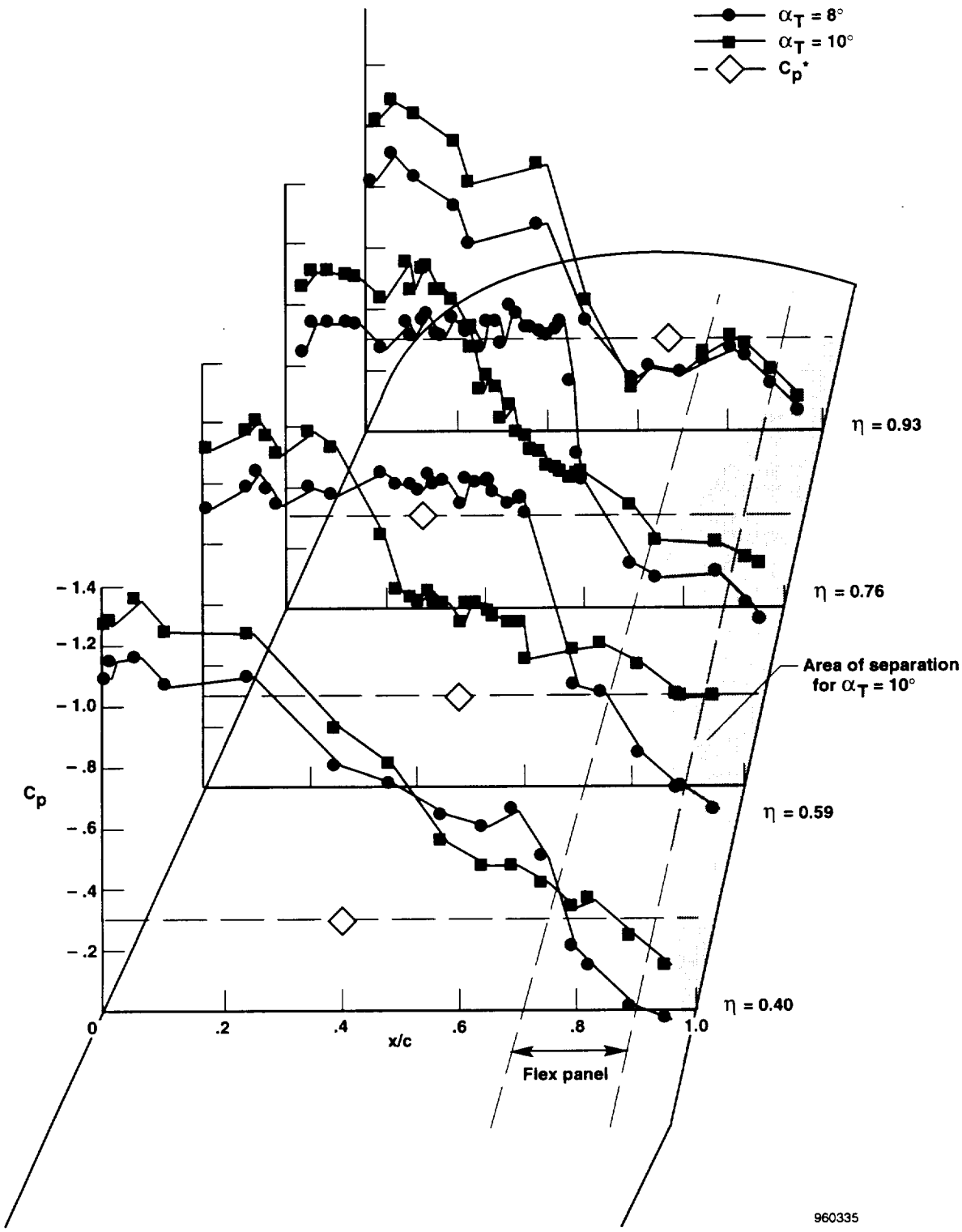

Figure 9. Steady chordwise pressure distributions at four semispan stations for $M_\infty \approx 0.85$, $q_\infty \approx 300$ lb/ft^2, and $\delta_{LE/TE} = 0/2$. No separation at $\alpha_T = 8°$ (ref. 12).

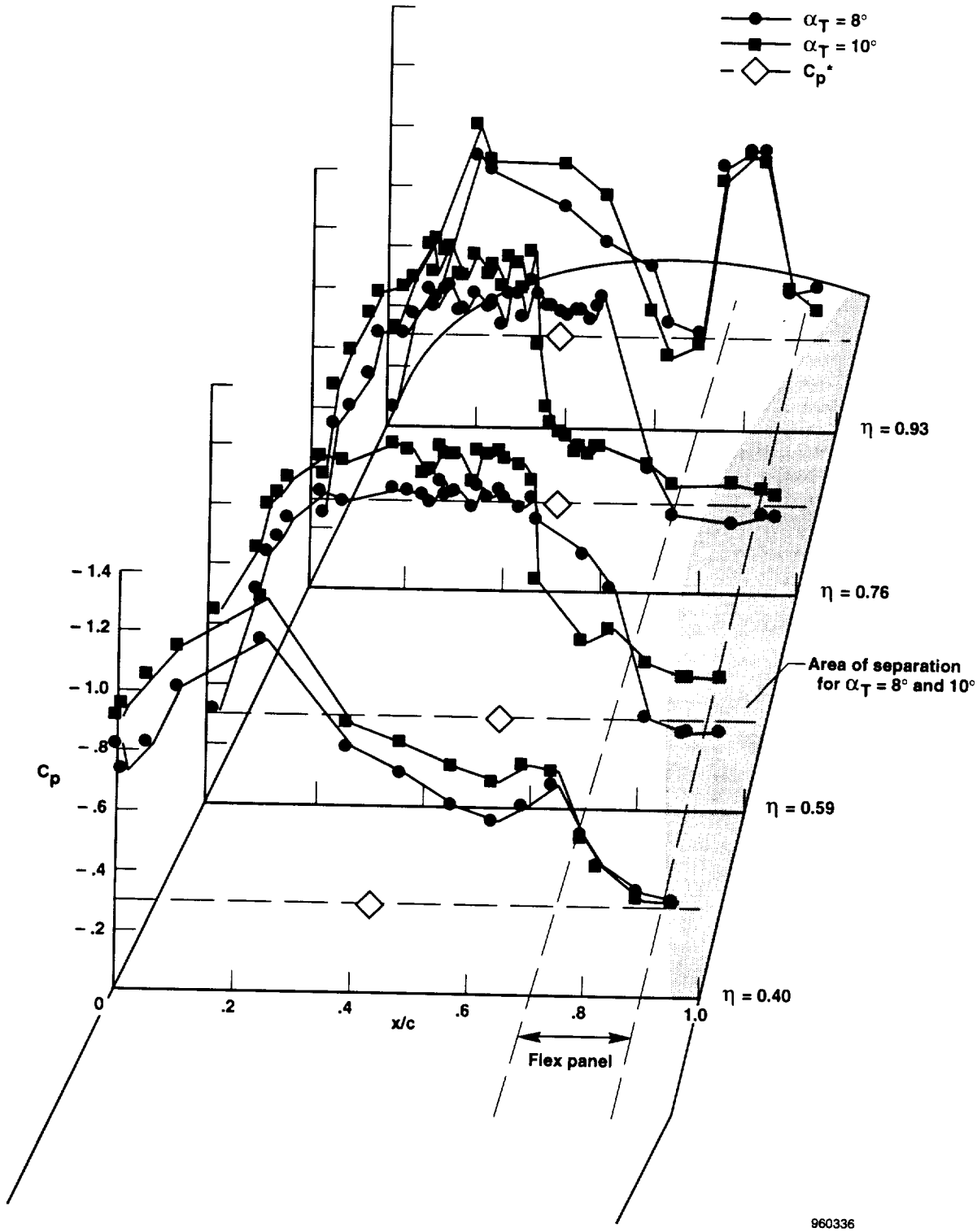

Figure 10. Steady chordwise pressure distributions at four semispan stations for $M_\infty \approx 0.85$, $q_\infty \approx 300$ lb/ft^2, and $\delta_{LE/TE} = 5/10$ (ref. 12).

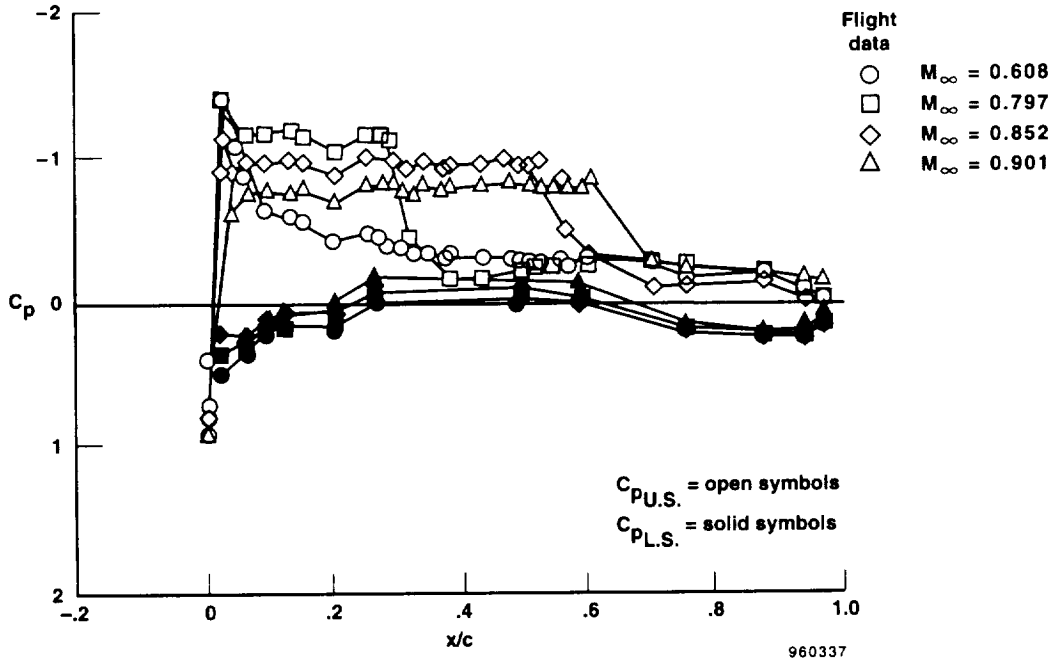

(a) Large Mach number range.

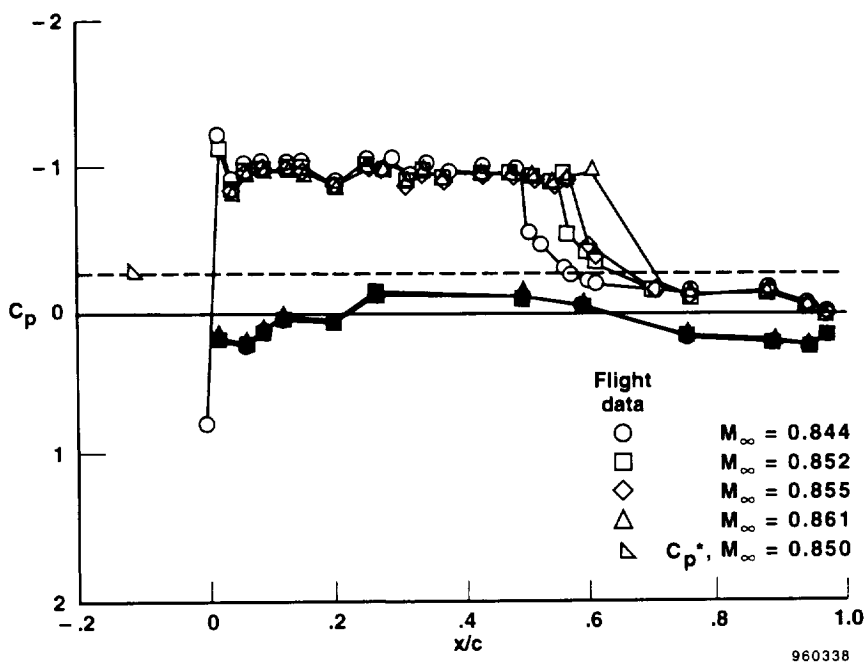

(b) Small Mach number range.

Figure 11. Steady chordwise pressure distributions for large and small ranges of Mach number; $\eta = 0.76$, $q_\infty \approx 300$ lb/ft^2, and $\alpha_T = 8°$ (ref. 11).

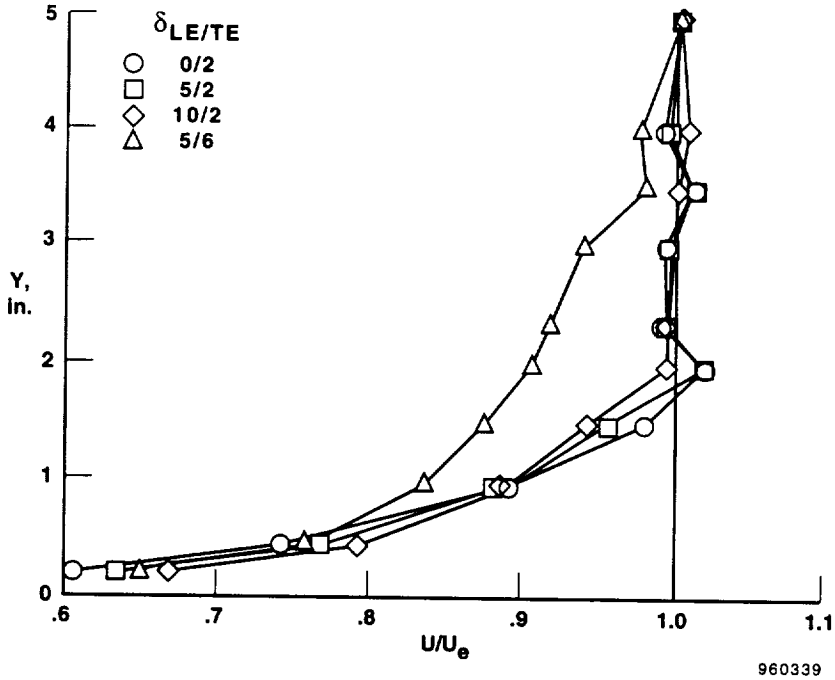

(a) Velocity profiles, $\alpha_T = 6°$.

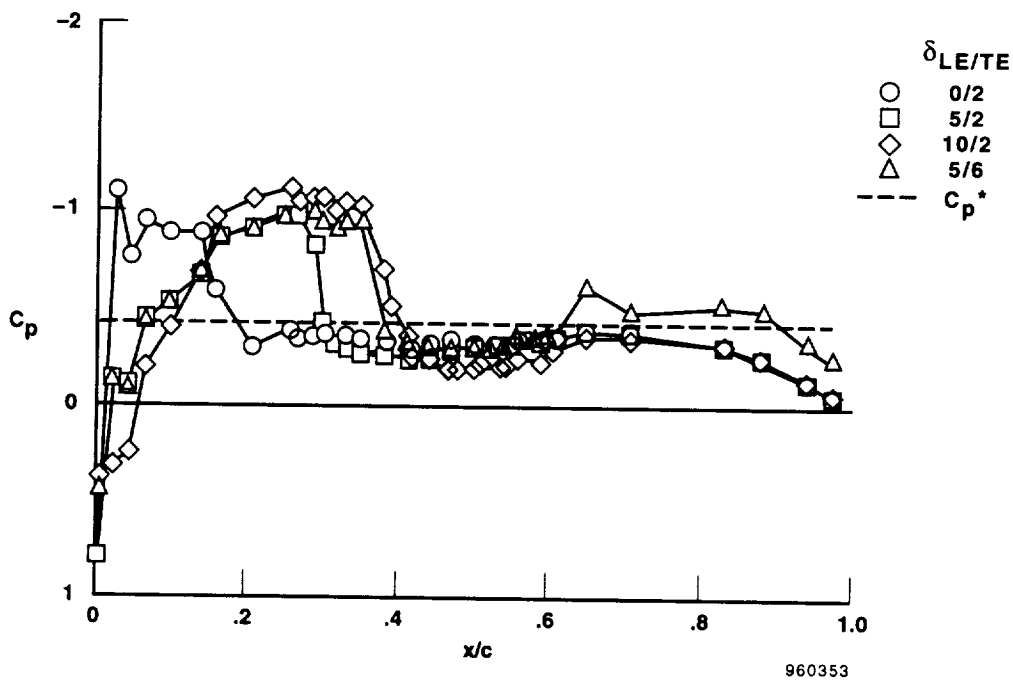

(b) Chordwise pressure distributions, $\alpha_T = 6°$.

Figure 12. Chordwise pressure distributions and velocity profiles for different cambers ($M_\infty \approx 0.80$, $\eta = 0.76$, and $q_\infty \approx 300$ lb/ft^2) (ref. 27).

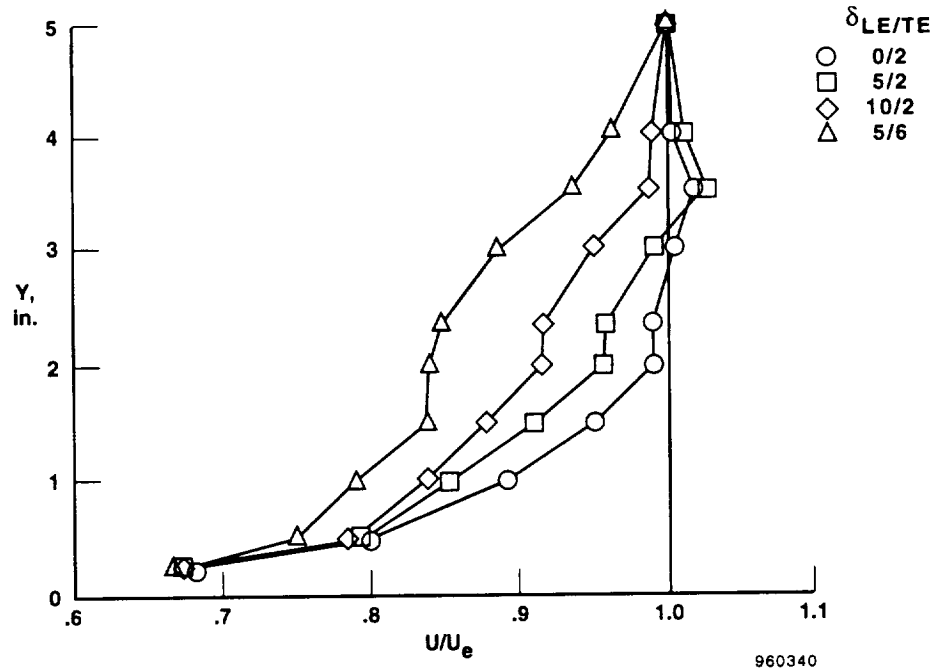

(c) Velocity profiles, $\alpha_T = 8°$.

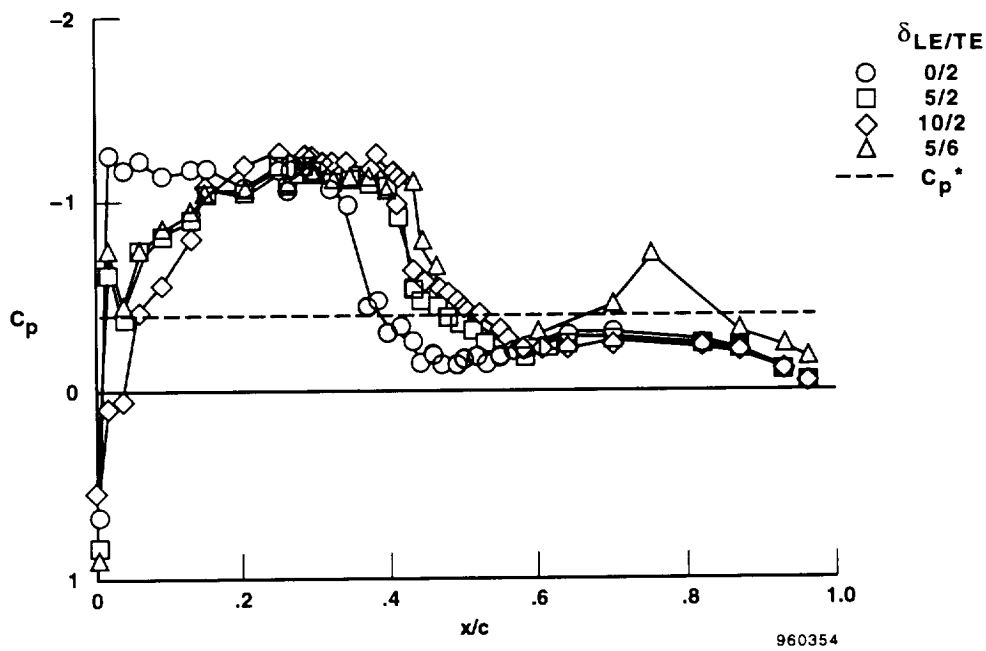

(d) Chordwise pressure distributions, $\alpha_T = 8°$.

Figure 12. Continued.

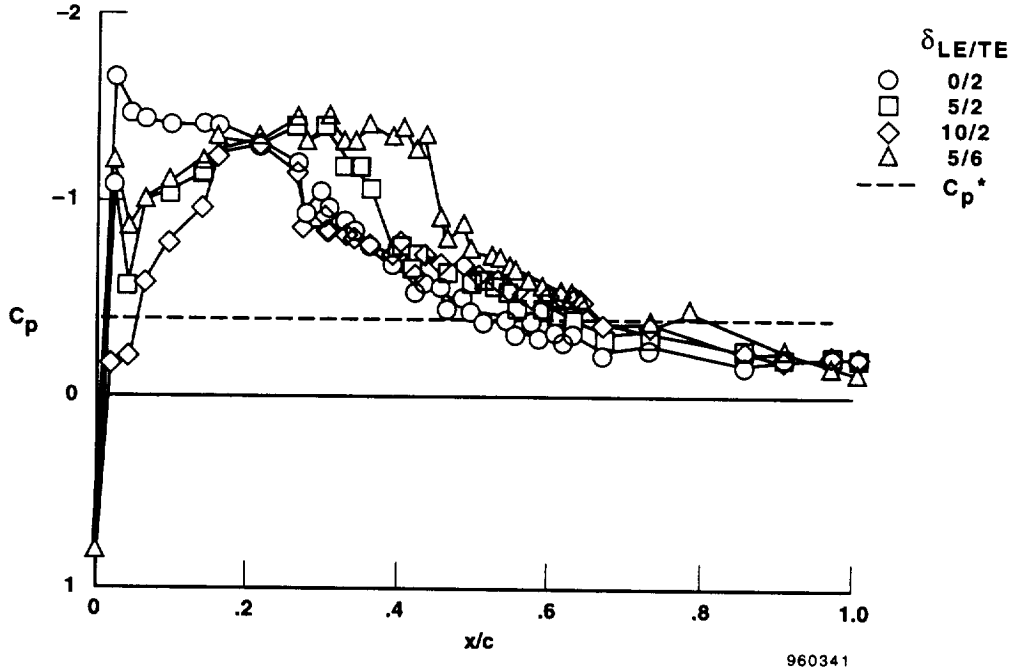

(e) Chordwise pressure distributions, $\alpha_T = 10°$.

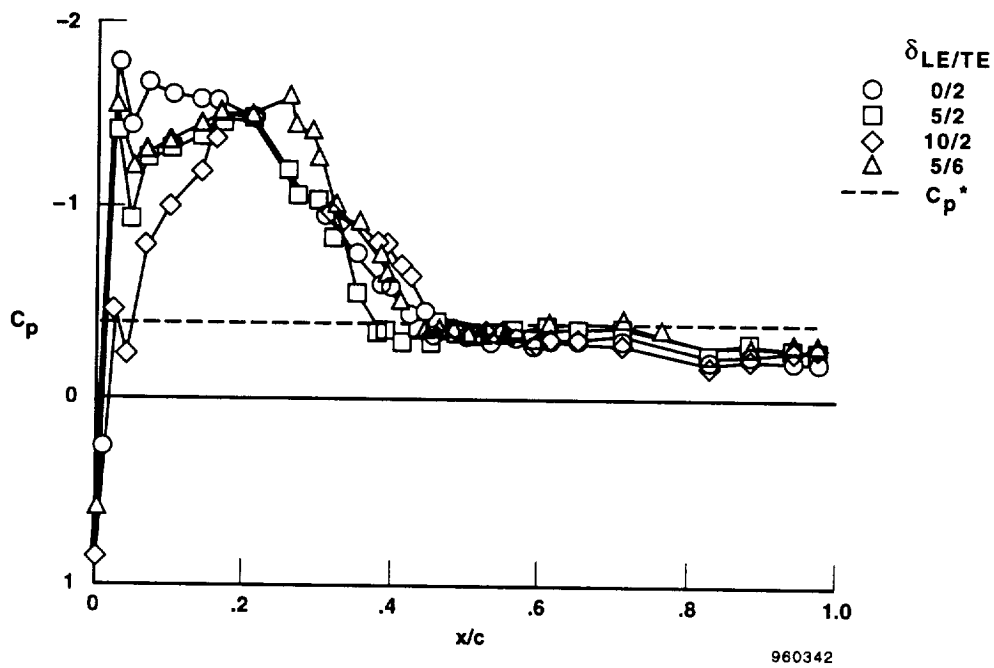

(f) Chordwise pressure distributions, $\alpha_T = 12°$.

Figure 12. Concluded.

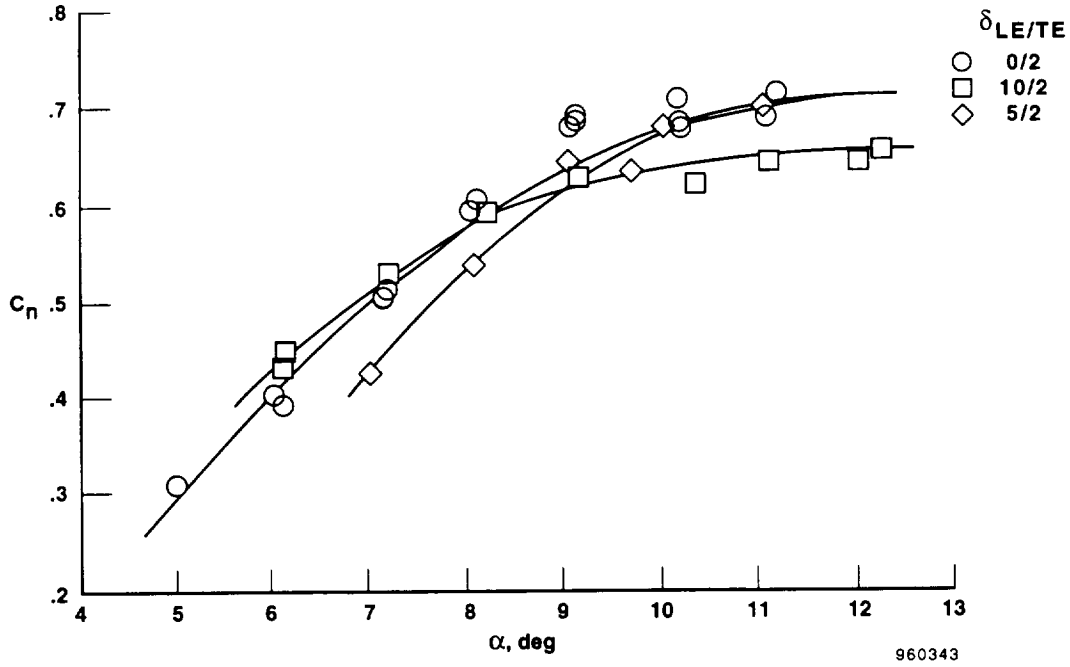

(a) Effects of leading-edge camber deflections.

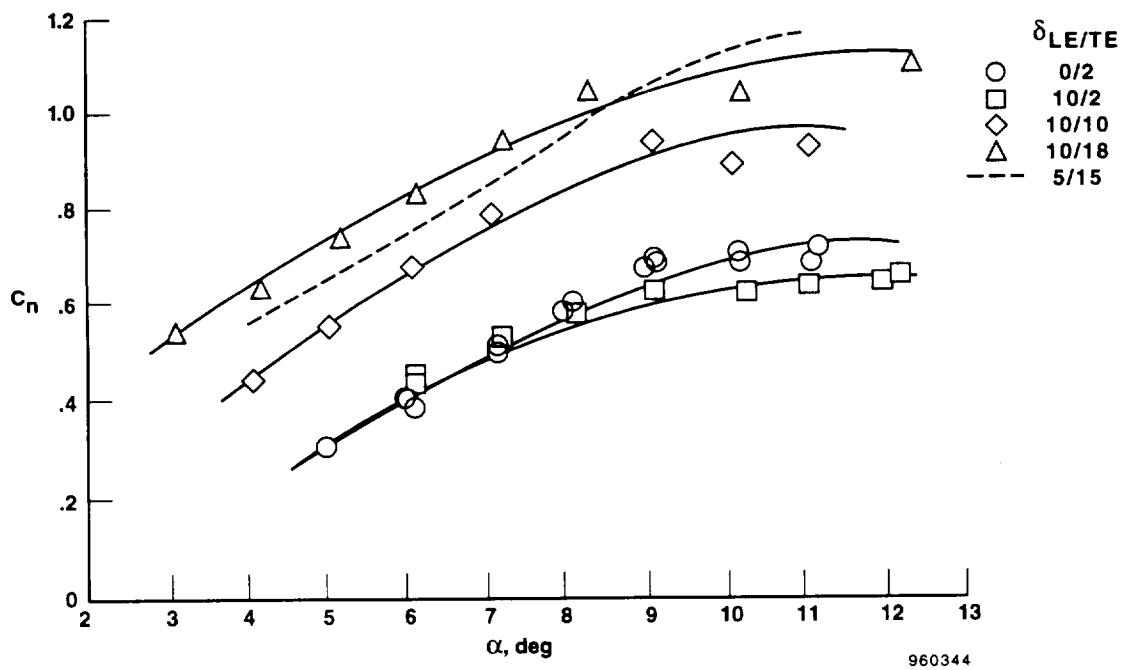

(b) Effects of trailing-edge camber deflections.

Figure 13. Section normal-force coefficient as a function of α_T for different camber deflections at $M_\infty = 0.80$, $\eta = 0.76$, and $q_\infty \approx 300$ lb/ft^2 (ref. 27).

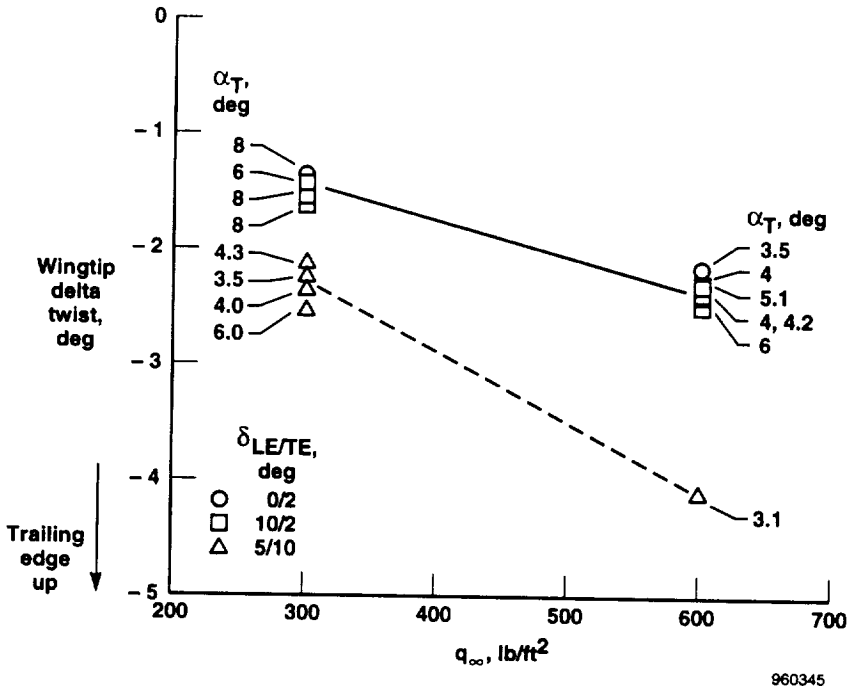

(a) FDMS wing-tip delta twist as a function of dynamic pressure for three cambers.

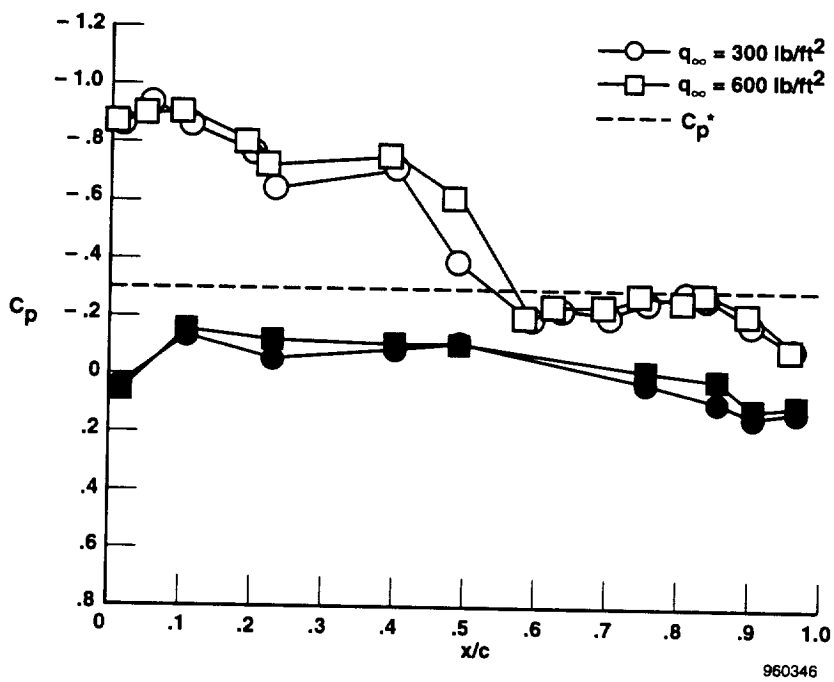

(b) $\delta_{LE/TE} = 0/2$, $\eta = 0.93$, $\alpha_T = 8°$.

Figure 14. Comparison of FDMS measured wingtip delta twist with two pressure profiles for $M_\infty \approx 0.85$ and $q_\infty \approx 300$ and 600 lb/ft^2 (ref. 12).

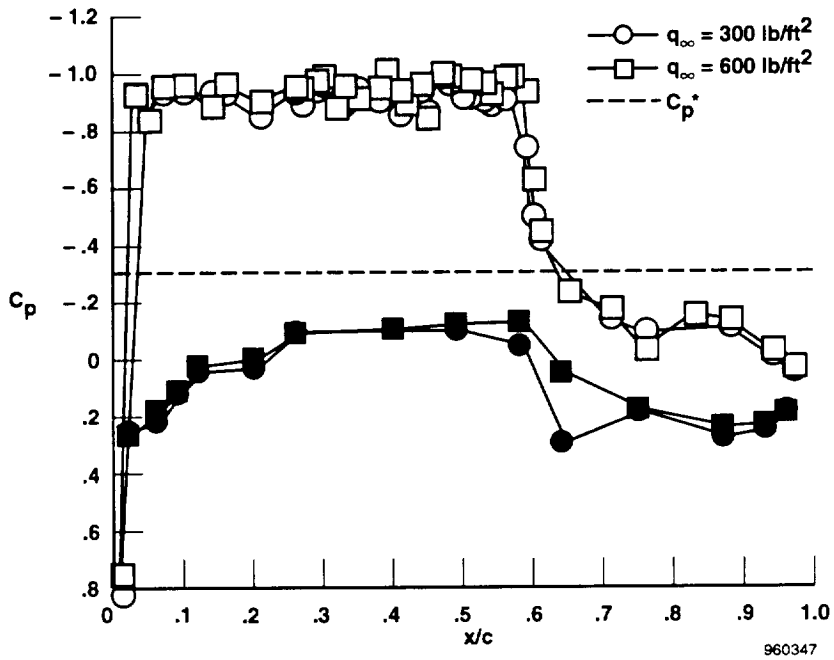

(c) $\delta_{LE/TE} = 0/2$, $\eta = 0.76$, $\alpha_T = 8°$.

Figure 14. Concluded.

APPENDIX A

Maw Airfoil Coordinates for a Wing Sweep of 26° at Span Stations 0.93, 0.76, 0.59, and 0.40.

Table A-1. Full-scale wing-splash coordinates ($\delta_{LE/TE} = 0/2$, $\eta = 0.93$, $c = 9.2276$ ft).

U.S.	U.S.	L.S.	L.S.
x/c	*z/c*	*x/c*	*z/c*
0.0000E-00	0.2646E-03	0.0000E-00	0.9031E-05
0.3432E-04	0.7487E-03	0.6322E-04	-0.7884E-03
0.2953E-03	0.1616E-02	0.2068E-03	-0.1342E-02
0.5473E-03	0.2110E-02	0.3648E-03	-0.1739E-02
0.8281E-03	0.2539E-02	0.7071E-03	-0.2366E-02
0.1598E-02	0.3425E-02	0.1086E-02	-0.2905E-02
0.2593E-02	0.4228E-02	0.1852E-02	-0.3663E-02
0.3248E-02	0.4675E-02	0.2521E-02	-0.4104E-02
0.4258E-02	0.5299E-02	0.3759E-02	-0.4773E-02
0.5294E-02	0.5879E-02	0.5408E-02	-0.5518E-02
0.6246E-02	0.6359E-02	0.7115E-02	-0.6171E-02
0.7485E-02	0.6922E-02	0.8438E-02	-0.6606E-02
0.9648E-02	0.7787E-02	0.1090E-01	-0.7293E-02
0.1159E-01	0.8479E-02	0.1353E-01	-0.7888E-02
0.1408E-01	0.9148E-02	0.1643E-01	-0.8447E-02
0.1660E-01	0.9823E-02	0.1913E-01	-0.8879E-02
0.1954E-01	0.1051E-01	0.2138E-01	-0.9178E-02
0.2250E-01	0.1124E-01	0.2331E-01	-0.9407E-02
0.2579E-01	0.1189E-01	0.2624E-01	-0.9678E-02
0.2950E-01	0.1254E-01	0.2870E-01	-0.9870E-02
0.3251E-01	0.1298E-01	0.3182E-01	-0.1006E-01
0.3557E-01	0.1345E-01	0.3617E-01	-0.1039E-01
0.3893E-01	0.1395E-01	0.3907E-01	-0.1078E-01
0.4193E-01	0.1436E-01	0.4221E-01	-0.1117E-01
0.4533E-01	0.1481E-01	0.4533E-01	-0.1167E-01
0.4746E-01	0.1508E-01	0.4877E-01	-0.1207E-01
0.5177E-01	0.1561E-01	0.5206E-01	-0.1243E-01
0.5710E-01	0.1624E-01	0.5568E-01	-0.1287E-01
0.6326E-01	0.1692E-01	0.5913E-01	-0.1321E-01
0.6905E-01	0.1752E-01	0.6235E-01	-0.1350E-01
0.7523E-01	0.1814E-01	0.6476E-01	-0.1377E-01

Table A-1. Continued.

U.S.	U.S.	L.S.	L.S.
x/c	*z/c*	*x/c*	*z/c*
0.8118E-01	0.1870E-01	0.6769E-01	-0.1410E-01
0.8598E-01	0.1915E-01	0.7106E-01	-0.1444E-01
0.9238E-01	0.1972E-01	0.7481E-01	-0.1481E-01
0.9986E-01	0.2036E-01	0.7855E-01	-0.1516E-01
0.1090E+00	0.2109E-01	0.8491E-01	-0.1570E-01
0.1204E+00	0.2195E-01	0.8808E-01	-0.1596E-01
0.1295E+00	0.2265E-01	0.9129E-01	-0.1621E-01
0.1417E+00	0.2347E-01	0.9583E-01	-0.1655E-01
0.1527E+00	0.2412E-01	0.9919E-01	-0.1676E-01
0.1619E+00	0.2464E-01	0.1034E+00	-0.1701E-01
0.1707E+00	0.2511E-01	0.1074E+00	-0.1723E-01
0.1815E+00	0.2562E-01	0.1114E+00	-0.1743E-01
0.1912E+00	0.2606E-01	0.1159E+00	-0.1765E-01
0.2023E+00	0.2657E-01	0.1205E+00	-0.1785E-01
0.2151E+00	0.2714E-01	0.1237E+00	-0.1798E-01
0.2268E+00	0.2767E-01	0.1277E+00	-0.1812E-01
0.2379E+00	0.2813E-01	0.1306E+00	-0.1822E-01
0.2505E+00	0.2843E-01	0.1356E+00	-0.1837E-01
0.2620E+00	0.2879E-01	0.1395E+00	-0.1849E-01
0.2737E+00	0.2919E-01	0.1436E+00	-0.1860E-01
0.2877E+00	0.2959E-01	0.1482E+00	-0.1870E-01
0.3012E+00	0.2990E-01	0.1525E+00	-0.1877E-01
0.3167E+00	0.3025E-01	0.1562E+00	-0.1880E-01
0.3265E+00	0.3047E-01	0.1604E+00	-0.1885E-01
0.3370E+00	0.3069E-01	0.1651E+00	-0.1895E-01
0.3494E+00	0.3093E-01	0.1706E+00	-0.1906E-01
0.3620E+00	0.3113E-01	0.1792E+00	-0.1924E-01
0.3745E+00	0.3134E-01	0.1874E+00	-0.1942E-01
0.3887E+00	0.3156E-01	0.1969E+00	-0.1968E-01
0.4016E+00	0.3171E-01	0.2044E+00	-0.1981E-01
0.4165E+00	0.3186E-01	0.2143E+00	-0.1988E-01
0.4282E+00	0.3199E-01	0.2237E+00	-0.1996E-01
0.4385E+00	0.3208E-01	0.2331E+00	-0.2005E-01
0.4479E+00	0.3217E-01	0.2437E+00	-0.2007E-01
0.4607E+00	0.3225E-01	0.2553E+00	-0.2009E-01
0.4732E+00	0.3233E-01	0.2631E+00	-0.2007E-01

Table A-1. Continued.

U.S.	U.S.	L.S.	L.S.
x/c	*z/c*	*x/c*	*z/c*
0.4859E+00	0.3239E-01	0.2715E+00	-0.2008E-01
0.4916E+00	0.3242E-01	0.2800E+00	-0.2010E-01
0.5105E+00	0.3246E-01	0.2912E+00	-0.2012E-01
0.5218E+00	0.3248E-01	0.3038E+00	-0.2015E-01
0.5315E+00	0.3251E-01	0.3168E+00	-0.2017E-01
0.5399E+00	0.3256E-01	0.3299E+00	-0.2019E-01
0.5533E+00	0.3263E-01	0.3396E+00	-0.2021E-01
0.5686E+00	0.3273E-01	0.3535E+00	-0.2018E-01
0.5857E+00	0.3281E-01	0.3642E+00	-0.2017E-01
0.5993E+00	0.3276E-01	0.3754E+00	-0.2018E-01
0.6178E+00	0.3271E-01	0.3878E+00	-0.2017E-01
0.6310E+00	0.3265E-01	0.3993E+00	-0.2016E-01
0.6337E+00	0.3263E-01	0.4107E+00	-0.2016E-01
0.6401E+00	0.3259E-01	0.4215E+00	-0.2015E-01
0.6490E+00	0.3249E-01	0.4272E+00	-0.2015E-01
0.6559E+00	0.3236E-01	0.4396E+00	-0.2014E-01
0.6659E+00	0.3212E-01	0.4545E+00	-0.2013E-01
0.6768E+00	0.3183E-01	0.4666E+00	-0.2010E-01
0.6884E+00	0.3152E-01	0.4793E+00	-0.2003E-01
0.7012E+00	0.3121E-01	0.4866E+00	-0.1998E-01
0.7140E+00	0.3084E-01	0.4918E+00	-0.1994E-01
0.7227E+00	0.3056E-01	0.5099E+00	-0.1974E-01
0.7350E+00	0.3013E-01	0.5220E+00	-0.1957E-01
0.7487E+00	0.2958E-01	0.5352E+00	-0.1935E-01
0.7574E+00	0.2920E-01	0.5489E+00	-0.1911E-01
0.7673E+00	0.2873E-01	0.5673E+00	-0.1877E-01
0.7759E+00	0.2828E-01	0.5859E+00	-0.1834E-01
0.7838E+00	0.2783E-01	0.6018E+00	-0.1793E-01
0.7908E+00	0.2743E-01	0.6160E+00	-0.1759E-01
0.7968E+00	0.2707E-01	0.6279E+00	-0.1721E-01
0.8014E+00	0.2676E-01	0.6334E+00	-0.1706E-01
0.8090E+00	0.2628E-01	0.6485E+00	-0.1670E-01
0.8178E+00	0.2567E-01	0.6603E+00	-0.1613E-01
0.8247E+00	0.2517E-01	0.6730E+00	-0.1537E-01
0.8309E+00	0.2470E-01	0.6881E+00	-0.1466E-01
0.8364E+00	0.2427E-01	0.7003E+00	-0.1363E-01

Table A-1. Continued.

U.S.	U.S.	L.S.	L.S.
x/c	*z/c*	*x/c*	*z/c*
0.8414E+00	0.2386E-01	0.7127E+00	-0.1282E-01
0.8464E+00	0.2343E-01	0.7231E+00	-0.1219E-01
0.8521E+00	0.2293E-01	0.7354E+00	-0.1134E-01
0.8576E+00	0.2242E-01	0.7485E+00	-0.1051E-01
0.8628E+00	0.2191E-01	0.7596E+00	-0.9766E-02
0.8686E+00	0.2133E-01	0.7703E+00	-0.9128E-02
0.8741E+00	0.2071E-01	0.7789E+00	-0.8438E-02
0.8800E+00	0.2008E-01	0.7890E+00	-0.7682E-02
0.8864E+00	0.1933E-01	0.8009E+00	-0.6807E-02
0.8924E+00	0.1860E-01	0.8106E+00	-0.6114E-02
0.8986E+00	0.1780E-01	0.8217E+00	-0.5299E-02
0.9030E+00	0.1721E-01	0.8335E+00	-0.4442E-02
0.9084E+00	0.1649E-01	0.8404E+00	-0.4024E-02
0.9134E+00	0.1579E-01	0.8451E+00	-0.3781E-02
0.9184E+00	0.1510E-01	0.8487E+00	-0.3499E-02
0.9246E+00	0.1419E-01	0.8544E+00	-0.2679E-02
0.9301E+00	0.1334E-01	0.8595E+00	-0.2248E-02
0.9348E+00	0.1262E-01	0.8659E+00	-0.2038E-02
0.9408E+00	0.1168E-01	0.8734E+00	-0.1916E-02
0.9450E+00	0.1103E-01	0.8808E+00	-0.1843E-02
0.9490E+00	0.1040E-01	0.8867E+00	-0.1822E-02
0.9535E+00	0.9675E-02	0.8936E+00	-0.1868E-02
0.9574E+00	0.9051E-02	0.8986E+00	-0.2000E-02
0.9613E+00	0.8411E-02	0.9034E+00	-0.1785E-02
0.9664E+00	0.7586E-02	0.9108E+00	-0.1702E-02
0.9714E+00	0.6739E-02	0.9182E+00	-0.1518E-02
0.9753E+00	0.6108E-02	0.9235E+00	-0.1426E-02
0.9790E+00	0.5493E-02	0.9300E+00	-0.1335E-02
0.9821E+00	0.4987E-02	0.9361E+00	-0.1275E-02
0.9852E+00	0.4487E-02	0.9414E+00	-0.1259E-02
0.9894E+00	0.3810E-02	0.9471E+00	-0.1284E-02
0.9921E+00	0.3395E-02	0.9535E+00	-0.1373E-02
0.9948E+00	0.2998E-02	0.9586E+00	-0.1421E-02
0.9961E+00	0.2821E-02	0.9637E+00	-0.1524E-02
0.9975E+00	0.2610E-02	0.9674E+00	-0.1625E-02
0.1000E+01	0.1227E-02	0.9718E+00	-0.1748E-02

Table A-1. Concluded.

U.S.	U.S.	L.S.	L.S.
x/c	*z/c*	*x/c*	*z/c*
		0.9759E+00	-0.1888E-02
		0.9808E+00	-0.2078E-02
		0.9855E+00	-0.2270E-02
		0.9896E+00	-0.2444E-02
		0.9922E+00	-0.2604E-02
		0.9942E+00	-0.2689E-02
		0.9961E+00	-0.2803E-02
		0.9974E+00	-0.2846E-02
		0.9992E+00	-0.1514E-02
		0.9995E+00	-0.3630E-03
		0.9997E+00	0.2763E-03
		0.1000E+01	0.1100E-02

Table A-2. Full-scale wing-splash coordinates ($\delta_{LE/TE} = 0/2$, $\eta = 0.76$, $c = 9.9413$ ft).

U.S.	U.S.	L.S.	L.S.
x/c	*z/c*	*x/c*	*z/c*
0.0000E+00	0.0000E+00	0.0000E+00	0.0000E+00
0.2019E-02	0.2853E-02	0.2019E-02	-0.2977E-02
0.4039E-02	0.5361E-02	0.4039E-02	-0.5368E-02
0.6071E-02	0.6884E-02	0.6058E-02	-0.6643E-02
0.8078E-02	0.8065E-02	0.8092E-02	-0.7512E-02
0.1012E-01	0.9086E-02	0.1010E-01	-0.8187E-02
0.1515E-01	0.1108E-01	0.1515E-01	-0.9588E-02
0.2021E-01	0.1264E-01	0.2018E-01	-0.1068E-01
0.3031E-01	0.1501E-01	0.3035E-01	-0.1223E-01
0.4041E-01	0.1696E-01	0.4041E-01	-0.1290E-01
0.6062E-01	0.2007E-01	0.6062E-01	-0.1495E-01
0.8083E-01	0.2238E-01	0.8082E-01	-0.1679E-01
0.1010E+00	0.2432E-01	0.1010E+00	-0.1849E-01
0.1212E+00	0.2600E-01	0.1212E+00	-0.2012E-01
0.1414E+00	0.2752E-01	0.1414E+00	-0.2159E-01
0.1616E+00	0.2891E-01	0.1616E+00	-0.2285E-01
0.1818E+00	0.3015E-01	0.1818E+00	-0.2392E-01
0.2020E+00	0.3128E-01	0.2020E+00	-0.2456E-01
0.2222E+00	0.3223E-01	0.2222E+00	-0.2520E-01
0.2424E+00	0.3287E-01	0.2424E+00	-0.2584E-01
0.2626E+00	0.3348E-01	0.2626E+00	-0.2641E-01
0.2829E+00	0.3402E-01	0.2828E+00	-0.2671E-01
0.3031E+00	0.3447E-01	0.3030E+00	-0.2697E-01
0.3232E+00	0.3484E-01	0.3232E+00	-0.2718E-01
0.3434E+00	0.3513E-01	0.3434E+00	-0.2715E-01
0.3636E+00	0.3532E-01	0.3636E+00	-0.2707E-01
0.3839E+00	0.3552E-01	0.3839E+00	-0.2701E-01
0.4041E+00	0.3569E-01	0.4040E+00	-0.2693E-01
0.4242E+00	0.3582E-01	0.4242E+00	-0.2675E-01
0.4444E+00	0.3588E-01	0.4444E+00	-0.2651E-01
0.4646E+00	0.3594E-01	0.4646E+00	-0.2624E-01
0.4849E+00	0.3594E-01	0.4849E+00	-0.2586E-01
0.5253E+00	0.3491E-01	0.5253E+00	-0.2450E-01
0.5446E+00	0.3485E-01	0.5455E+00	-0.2370E-01
0.5455E+00	0.3485E-01	0.5656E+00	-0.2288E-01

Table A-2. Concluded.

U.S.	U.S.	L.S.	L.S.
x/c	*z/c*	*x/c*	*z/c*
0.5657E+00	0.3474E-01	0.5859E+00	-0.2187E-01
0.6061E+00	0.3444E-01	0.6061E+00	-0.2063E-01
0.6263E+00	0.3416E-01	0.6263E+00	-0.1907E-01
0.6465E+00	0.3397E-01	0.6465E+00	-0.1708E-01
0.6667E+00	0.3370E-01	0.6667E+00	-0.1504E-01
0.6877E+00	0.3298E-01	0.6877E+00	-0.1284E-01
0.7071E+00	0.3223E-01	0.7071E+00	-0.1072E-01
0.7273E+00	0.3145E-01	0.7273E+00	-0.8346E-02
0.7475E+00	0.3054E-01	0.7475E+00	-0.6090E-02
0.7677E+00	0.2947E-01	0.7677E+00	-0.4011E-02
0.7879E+00	0.2820E-01	0.7879E+00	-0.2174E-02
0.8081E+00	0.2671E-01	0.8081E+00	-0.6614E-03
0.8283E+00	0.2510E-01	0.8283E+00	0.5901E-03
0.8485E+00	0.2337E-01	0.8485E+00	0.1547E-02
0.8687E+00	0.2141E-01	0.8687E+00	0.2518E-02
0.8889E+00	0.1918E-01	0.8889E+00	0.2568E-02
0.9091E+00	0.1662E-01	0.9091E+00	0.2623E-02
0.9192E+00	0.1524E-01	0.9192E+00	0.1733E-02
0.9293E+00	0.1389E-01	0.9293E+00	0.1387E-02
0.9394E+00	0.1242E-01	0.9394E+00	0.1100E-02
0.9495E+00	0.1083E-01	0.9495E+00	0.8022E-03
0.9596E+00	0.9002E-02	0.9596E+00	0.2892E-03
0.9697E+00	0.7450E-02	0.9697E+00	-0.3160E-03
0.9798E+00	0.5842E-02	0.9798E+00	-0.9087E-03
0.9899E+00	0.4231E-02	0.9899E+00	-0.1443E-02
0.1000E+01	0.2643E-02	0.1000E+01	-0.1974E-02

Table A-3. Full-scale wing-splash coordinates ($\delta_{LE/TE} = 0/2$, $\eta = 0.59$, $c = 10.8549$ ft).

U.S.	U.S.	L.S.	L.S.
x/c	z/c	x/c	z/c
0.0000E+00	0.6326E-03	0.0000E-00	0.4606E-05
0.1919E-04	0.8736E-03	0.1459E-04	-0.5765E-03
0.9136E-04	0.1513E-02	0.6372E-04	-0.1217E-02
0.1750E-03	0.2027E-02	0.1382E-03	-0.1821E-02
0.2948E-03	0.2566E-02	0.2656E-03	-0.2521E-02
0.5405E-03	0.3341E-02	0.4468E-03	-0.3174E-02
0.8759E-03	0.4163E-02	0.7071E-03	-0.3841E-02
0.1330E-02	0.4984E-02	0.9397E-03	-0.4324E-02
0.1692E-02	0.5553E-02	0.1375E-02	-0.5073E-02
0.2208E-02	0.6254E-02	0.1730E-02	-0.5605E-02
0.3359E-02	0.7494E-02	0.2554E-02	-0.6666E-02
0.3878E-02	0.7942E-02	0.2831E-02	-0.6952E-02
0.4324E-02	0.8301E-02	0.3232E-02	-0.7325E-02
0.5160E-02	0.8940E-02	0.3593E-02	-0.7603E-02
0.5850E-02	0.9423E-02	0.4028E-02	-0.7875E-02
0.6926E-02	0.1016E-01	0.4645E-02	-0.8339E-02
0.7881E-02	0.1076E-01	0.5741E-02	-0.9067E-02
0.8618E-02	0.1119E-01	0.6639E-02	-0.9609E-02
0.9441E-02	0.1161E-01	0.7690E-02	-0.1016E-01
0.1051E-01	0.1212E-01	0.8935E-02	-0.1074E-01
0.1148E-01	0.1256E-01	0.1025E-01	-0.1131E-01
0.1258E-01	0.1304E-01	0.1168E-01	-0.1185E-01
0.1379E-01	0.1356E-01	0.1307E-01	-0.1231E-01
0.1511E-01	0.1406E-01	0.1461E-01	-0.1277E-01
0.1665E-01	0.1460E-01	0.1695E-01	-0.1342E-01
0.1843E-01	0.1521E-01	0.1930E-01	-0.1399E-01
0.2053E-01	0.1589E-01	0.2192E-01	-0.1453E-01
0.2212E-01	0.1637E-01	0.2565E-01	-0.1519E-01
0.2394E-01	0.1691E-01	0.2888E-01	-0.1530E-01
0.2641E-01	0.1759E-01	0.3218E-01	-0.1574E-01
0.2834E-01	0.1811E-01	0.3604E-01	-0.1622E-01
0.3036E-01	0.1862E-01	0.4030E-01	-0.1691E-01
0.3295E-01	0.1924E-01	0.4350E-01	-0.1742E-01
0.3570E-01	0.1985E-01	0.4890E-01	-0.1813E-01
0.3839E-01	0.2042E-01	0.5347E-01	-0.1870E-01
0.4128E-01	0.2099E-01	0.5907E-01	-0.1941E-01
0.4389E-01	0.2147E-01	0.6754E-01	-0.2051E-01
0.4728E-01	0.2205E-01	0.7552E-01	-0.2153E-01

Table A-3. Continued.

U.S.	U.S.	L.S.	L.S.
x/c	*z/c*	*x/c*	*z/c*
0.5185E-01	0.2279E-01	0.8327E-01	-0.2245E-01
0.5555E-01	0.2335E-01	0.8996E-01	-0.2315E-01
0.5920E-01	0.2386E-01	0.9900E-01	-0.2403E-01
0.6309E-01	0.2439E-01	0.1074E+00	-0.2492E-01
0.6683E-01	0.2487E-01	0.1144E+00	-0.2570E-01
0.7191E-01	0.2549E-01	0.1209E+00	-0.2638E-01
0.7621E-01	0.2598E-01	0.1287E+00	-0.2717E-01
0.8102E-01	0.2654E-01	0.1375E+00	-0.2805E-01
0.8468E-01	0.2694E-01	0.1469E+00	-0.2871E-01
0.8853E-01	0.2735E-01	0.1563E+00	-0.2926E-01
0.9224E-01	0.2774E-01	0.1631E+00	-0.2957E-01
0.9628E-01	0.2816E-01	0.1719E+00	-0.2980E-01
0.1042E+00	0.2897E-01	0.1797E+00	-0.2980E-01
0.1087E+00	0.2941E-01	0.1895E+00	-0.3039E-01
0.1154E+00	0.3005E-01	0.1987E+00	-0.3085E-01
0.1213E+00	0.3062E-01	0.2084E+00	-0.3135E-01
0.1284E+00	0.3130E-01	0.2190E+00	-0.3179E-01
0.1364E+00	0.3207E-01	0.2285E+00	-0.3210E-01
0.1444E+00	0.3275E-01	0.2406E+00	-0.3250E-01
0.1521E+00	0.3336E-01	0.2510E+00	-0.3282E-01
0.1603E+00	0.3402E-01	0.2602E+00	-0.3301E-01
0.1690E+00	0.3468E-01	0.2643E+00	-0.3309E-01
0.1780E+00	0.3531E-01	0.2721E+00	-0.3322E-01
0.1880E+00	0.3594E-01	0.2797E+00	-0.3335E-01
0.1983E+00	0.3659E-01	0.2901E+00	-0.3352E-01
0.2080E+00	0.3706E-01	0.3022E+00	-0.3369E-01
0.2193E+00	0.3760E-01	0.3116E+00	-0.3382E-01
0.2282E+00	0.3803E-01	0.3211E+00	-0.3392E-01
0.2403E+00	0.3853E-01	0.3305E+00	-0.3399E-01
0.2488E+00	0.3879E-01	0.3419E+00	-0.3404E-01
0.2563E+00	0.3900E-01	0.3520E+00	-0.3403E-01
0.2675E+00	0.3930E-01	0.3641E+00	-0.3397E-01
0.2821E+00	0.3968E-01	0.3763E+00	-0.3388E-01
0.2939E+00	0.3998E-01	0.3910E+00	-0.3377E-01
0.3061E+00	0.4023E-01	0.4046E+00	-0.3364E-01
0.3176E+00	0.4044E-01	0.4171E+00	-0.3350E-01
0.3292E+00	0.4056E-01	0.4299E+00	-0.3331E-01
0.3384E+00	0.4073E-01	0.4430E+00	-0.3309E-01

Table A-3. Continued.

U.S.	U.S.	L.S.	L.S.
x/c	*z/c*	*x/c*	*z/c*
0.3481E+00	0.4084E-01	0.4551E+00	-0.3291E-01
0.3575E+00	0.4094E-01	0.4682E+00	-0.3265E-01
0.3678E+00	0.4106E-01	0.4800E+00	-0.3232E-01
0.3780E+00	0.4117E-01	0.4864E+00	-0.3214E-01
0.3900E+00	0.4121E-01	0.4910E+00	-0.3201E-01
0.4038E+00	0.4124E-01	0.5066E+00	-0.3151E-01
0.4165E+00	0.4124E-01	0.5161E+00	-0.3119E-01
0.4290E+00	0.4121E-01	0.5253E+00	-0.3085E-01
0.4417E+00	0.4119E-01	0.5345E+00	-0.3047E-01
0.4521E+00	0.4117E-01	0.5379E+00	-0.3031E-01
0.4598E+00	0.4112E-01	0.5384E+00	-0.3029E-01
0.4699E+00	0.4108E-01	0.5485E+00	-0.2988E-01
0.4816E+00	0.4096E-01	0.5616E+00	-0.2932E-01
0.4917E+00	0.4086E-01	0.5769E+00	-0.2855E-01
0.5059E+00	0.4069E-01	0.5921E+00	-0.2757E-01
0.5164E+00	0.4056E-01	0.6149E+00	-0.2560E-01
0.5272E+00	0.4040E-01	0.6262E+00	-0.2450E-01
0.5370E+00	0.4029E-01	0.6372E+00	-0.2342E-01
0.5372E+00	0.4029E-01	0.6463E+00	-0.2256E-01
0.5409E+00	0.4025E-01	0.6569E+00	-0.2124E-01
0.5499E+00	0.4012E-01	0.6678E+00	-0.1996E-01
0.5618E+00	0.3994E-01	0.6789E+00	-0.1828E-01
0.5724E+00	0.3979E-01	0.6898E+00	-0.1659E-01
0.5833E+00	0.3963E-01	0.7030E+00	-0.1432E-01
0.5942E+00	0.3947E-01	0.7131E+00	-0.1264E-01
0.6089E+00	0.3936E-01	0.7235E+00	-0.1084E-01
0.6246E+00	0.3914E-01	0.7327E+00	-0.9399E-02
0.6350E+00	0.3896E-01	0.7426E+00	-0.7831E-02
0.6454E+00	0.3877E-01	0.7546E+00	-0.5836E-02
0.6573E+00	0.3861E-01	0.7674E+00	-0.3945E-02
0.6706E+00	0.3818E-01	0.7788E+00	-0.2470E-02
0.6848E+00	0.3755E-01	0.7902E+00	-0.1047E-02
0.6980E+00	0.3684E-01	0.7989E+00	-0.8291E-04
0.7116E+00	0.3610E-01	0.8069E+00	0.7155E-03
0.7225E+00	0.3557E-01	0.8184E+00	0.1694E-02
0.7341E+00	0.3497E-01	0.8290E+00	0.2474E-02
0.7441E+00	0.3442E-01	0.8377E+00	0.2950E-02
0.7554E+00	0.3370E-01	0.8473E+00	0.3357E-02

Table A-3. Concluded.

U.S.	U.S.	L.S.	L.S.
x/c	*z/c*	*x/c*	*z/c*
0.7672E+00	0.3289E-01	0.8538E+00	0.3548E-02
0.7796E+00	0.3195E-01	0.8631E+00	0.4168E-02
0.7923E+00	0.3089E-01	0.8719E+00	0.4047E-02
0.8020E+00	0.3001E-01	0.8810E+00	0.3772E-02
0.8140E+00	0.2887E-01	0.8910E+00	0.3337E-02
0.8235E+00	0.2795E-01	0.9009E+00	0.2952E-02
0.8349E+00	0.2678E-01	0.9053E+00	0.2882E-02
0.8443E+00	0.2575E-01	0.9126E+00	0.2528E-02
0.8534E+00	0.2470E-01	0.9208E+00	0.2106E-02
0.8612E+00	0.2373E-01	0.9282E+00	0.1735E-02
0.8696E+00	0.2265E-01	0.9362E+00	0.1274E-02
0.8789E+00	0.2138E-01	0.9427E+00	0.8752E-03
0.8872E+00	0.2020E-01	0.9531E+00	0.1835E-03
0.8939E+00	0.1920E-01	0.9606E+00	-0.3900E-03
0.9021E+00	0.1794E-01	0.9693E+00	-0.1084E-02
0.9092E+00	0.1684E-01	0.9777E+00	-0.1563E-02
0.9179E+00	0.1549E-01	0.9844E+00	-0.1925E-02
0.9238E+00	0.1457E-01	0.9900E+00	-0.2226E-02
0.9310E+00	0.1335E-01	0.9931E+00	-0.2384E-02
0.9373E+00	0.1223E-01	0.9957E+00	-0.2533E-02
0.9434E+00	0.1117E-01	0.9973E+00	-0.2640E-02
0.9494E+00	0.1013E-01	0.9980E+00	-0.2655E-02
0.9556E+00	0.9066E-02	0.9996E+00	-0.1731E-02
0.9619E+00	0.8071E-02	0.9998E+00	-0.1157E-02
0.9667E+00	0.7321E-02	0.9999E+00	-0.2917E-03
0.9727E+00	0.6391E-02	0.1000E+01	0.3393E-03
0.9785E+00	0.5461E-02		
0.9831E+00	0.4677E-02		
0.9873E+00	0.3883E-02		
0.9916E+00	0.3085E-02		
0.9949E+00	0.2499E-02		
0.9974E+00	0.2125E-02		
0.9987E+00	0.1910E-02		
0.1000E+01	0.9842E-03		

Table A-4. Full-scale wing-splash coordinates ($\delta_{LE/TE} = 5/10$, $\eta = 0.76$, $c = 9.8570$ ft).

U.S.	U.S.	L.S.	L.S.
x/c	*z/c*	*x/c*	*z/c*
0.0000E-00	0.6746E-03	0.0000E-00	-0.4227E-05
0.1293E-03	0.1403E-02	0.2114E-04	-0.5631E-03
0.3213E-03	0.2130E-02	0.1936E-03	-0.1441E-02
0.5470E-03	0.2666E-02	0.3804E-03	-0.2054E-02
0.9587E-03	0.3604E-02	0.6594E-03	-0.2787E-02
0.1370E-02	0.4377E-02	0.9891E-03	-0.3421E-02
0.1721E-02	0.4922E-02	0.1245E-02	-0.3861E-02
0.2743E-02	0.6193E-02	0.1517E-02	-0.4275E-02
0.3673E-02	0.7080E-02	0.1885E-02	-0.4715E-02
0.4046E-02	0.7419E-02	0.3068E-02	-0.5816E-02
0.4581E-02	0.7877E-02	0.3694E-02	-0.6232E-02
0.5524E-02	0.8665E-02	0.4414E-02	-0.6621E-02
0.6815E-02	0.9647E-02	0.5505E-02	-0.7114E-02
0.7735E-02	0.1032E-01	0.6970E-02	-0.7639E-02
0.8626E-02	0.1093E-01	0.8511E-02	-0.8008E-02
0.1018E-01	0.1190E-01	0.1004E-01	-0.8258E-02
0.1170E-01	0.1277E-01	0.1233E-01	-0.8592E-02
0.1303E-01	0.1349E-01	0.1453E-01	-0.8830E-02
0.1508E-01	0.1456E-01	0.1694E-01	-0.9009E-02
0.1733E-01	0.1566E-01	0.1975E-01	-0.9132E-02
0.1904E-01	0.1647E-01	0.2300E-01	-0.9175E-02
0.2051E-01	0.1713E-01	0.2559E-01	-0.9152E-02
0.2236E-01	0.1793E-01	0.2818E-01	-0.9120E-02
0.2480E-01	0.1892E-01	0.3027E-01	-0.9062E-02
0.2693E-01	0.1979E-01	0.3264E-01	-0.8862E-02
0.2953E-01	0.2084E-01	0.3384E-01	-0.8558E-02
0.3230E-01	0.2192E-01	0.3498E-01	-0.8354E-02
0.3427E-01	0.2266E-01	0.3616E-01	-0.8203E-02
0.3614E-01	0.2335E-01	0.3751E-01	-0.8093E-02
0.3892E-01	0.2436E-01	0.3864E-01	-0.8001E-02
0.4164E-01	0.2533E-01	0.3976E-01	-0.7983E-02
0.4564E-01	0.2670E-01	0.4105E-01	-0.8036E-02
0.4800E-01	0.2747E-01	0.4273E-01	-0.8057E-02
0.5136E-01	0.2854E-01	0.4407E-01	-0.8054E-02
0.5503E-01	0.2966E-01	0.4504E-01	-0.8051E-02

Table A-4. Continued.

U.S.	U.S.	L.S.	L.S.
x/c	*z/c*	*x/c*	*z/c*
0.5922E-01	0.3090E-01	0.4611E-01	-0.8044E-02
0.6302E-01	0.3197E-01	0.4741E-01	-0.8049E-02
0.6658E-01	0.3294E-01	0.4914E-01	-0.8052E-02
0.7136E-01	0.3422E-01	0.5086E-01	-0.8070E-02
0.7514E-01	0.3520E-01	0.5353E-01	-0.8075E-02
0.7960E-01	0.3630E-01	0.5545E-01	-0.8083E-02
0.8587E-01	0.3777E-01	0.5751E-01	-0.8104E-02
0.9081E-01	0.3891E-01	0.5977E-01	-0.8125E-02
0.9658E-01	0.4019E-01	0.6259E-01	-0.8119E-02
0.1008E+00	0.4111E-01	0.6415E-01	-0.8108E-02
0.1051E+00	0.4200E-01	0.6792E-01	-0.8082E-02
0.1118E+00	0.4335E-01	0.7184E-01	-0.8048E-02
0.1167E+00	0.4431E-01	0.7714E-01	-0.7961E-02
0.1226E+00	0.4539E-01	0.8357E-01	-0.7828E-02
0.1288E+00	0.4648E-01	0.8811E-01	-0.7730E-02
0.1352E+00	0.4753E-01	0.9508E-01	-0.7562E-02
0.1431E+00	0.4874E-01	0.1022E+00	-0.7392E-02
0.1499E+00	0.4966E-01	0.1100E+00	-0.7228E-02
0.1579E+00	0.5060E-01	0.1187E+00	-0.7058E-02
0.1650E+00	0.5134E-01	0.1267E+00	-0.6905E-02
0.1739E+00	0.5224E-01	0.1329E+00	-0.6761E-02
0.1830E+00	0.5310E-01	0.1412E+00	-0.6564E-02
0.1914E+00	0.5381E-01	0.1512E+00	-0.6247E-02
0.2002E+00	0.5457E-01	0.1589E+00	-0.6003E-02
0.2100E+00	0.5537E-01	0.1684E+00	-0.5672E-02
0.2200E+00	0.5606E-01	0.1768E+00	-0.5383E-02
0.2307E+00	0.5677E-01	0.1854E+00	-0.5040E-02
0.2401E+00	0.5740E-01	0.1961E+00	-0.4533E-02
0.2502E+00	0.5805E-01	0.2019E+00	-0.3984E-02
0.2615E+00	0.5874E-01	0.2120E+00	-0.3940E-02
0.2751E+00	0.5958E-01	0.2215E+00	-0.3986E-02
0.2863E+00	0.6021E-01	0.2326E+00	-0.3990E-02
0.2980E+00	0.6086E-01	0.2442E+00	-0.3943E-02
0.3075E+00	0.6138E-01	0.2566E+00	-0.3923E-02
0.3176E+00	0.6187E-01	0.2691E+00	-0.3756E-02
0.3292E+00	0.6241E-01	0.2854E+00	-0.3439E-02

Table A-4. Continued.

U.S.	U.S.	L.S.	L.S.
x/c	*z/c*	*x/c*	*z/c*
0.3414E+00	0.6297E-01	0.3006E+00	-0.3171E-02
0.3526E+00	0.6345E-01	0.3141E+00	-0.2921E-02
0.3635E+00	0.6393E-01	0.3277E+00	-0.2508E-02
0.3756E+00	0.6444E-01	0.3421E+00	-0.2004E-02
0.3877E+00	0.6494E-01	0.3567E+00	-0.1474E-02
0.3966E+00	0.6530E-01	0.3715E+00	-0.9494E-03
0.4064E+00	0.6569E-01	0.3862E+00	-0.4472E-03
0.4209E+00	0.6626E-01	0.4019E+00	0.1336E-03
0.4347E+00	0.6673E-01	0.4175E+00	0.7626E-03
0.4482E+00	0.6720E-01	0.4333E+00	0.1453E-02
0.4635E+00	0.6771E-01	0.4482E+00	0.2122E-02
0.4766E+00	0.6817E-01	0.4576E+00	0.2551E-02
0.4862E+00	0.6845E-01	0.4709E+00	0.3191E-02
0.4930E+00	0.6865E-01	0.4825E+00	0.3800E-02
0.5091E+00	0.6917E-01	0.4891E+00	0.4160E-02
0.5126E+00	0.6922E-01	0.4932E+00	0.4389E-02
0.5222E+00	0.6949E-01	0.5078E+00	0.5268E-02
0.5294E+00	0.6967E-01	0.5209E+00	0.6151E-02
0.5403E+00	0.6994E-01	0.5329E+00	0.7003E-02
0.5516E+00	0.7022E-01	0.5439E+00	0.7770E-02
0.5656E+00	0.7052E-01	0.5543E+00	0.8487E-02
0.5799E+00	0.7082E-01	0.5645E+00	0.9221E-02
0.5841E+00	0.7090E-01	0.5719E+00	0.9787E-02
0.5881E+00	0.7099E-01	0.5843E+00	0.1078E-01
0.5881E+00	0.7099E-01	0.5902E+00	0.1129E-01
0.5909E+00	0.7105E-01	0.5903E+00	0.1129E-01
0.5911E+00	0.7105E-01	0.5925E+00	0.1149E-01
0.5953E+00	0.7113E-01	0.6025E+00	0.1241E-01
0.6009E+00	0.7124E-01	0.6140E+00	0.1355E-01
0.6073E+00	0.7137E-01	0.6245E+00	0.1469E-01
0.6122E+00	0.7142E-01	0.6325E+00	0.1570E-01
0.6158E+00	0.7147E-01	0.6422E+00	0.1696E-01
0.6235E+00	0.7158E-01	0.6536E+00	0.1857E-01
0.6334E+00	0.7173E-01	0.6585E+00	0.1928E-01
0.6415E+00	0.7187E-01	0.6634E+00	0.1997E-01
0.6503E+00	0.7208E-01	0.6667E+00	0.2042E-01

Table A-4. Continued.

U.S.	U.S.	L.S.	L.S.
x/c	*z/c*	*x/c*	*z/c*
0.6584E+00	0.7222E-01	0.6718E+00	0.2098E-01
0.6655E+00	0.7228E-01	0.6775E+00	0.2156E-01
0.6721E+00	0.7228E-01	0.6833E+00	0.2217E-01
0.6767E+00	0.7226E-01	0.6888E+00	0.2266E-01
0.6825E+00	0.7221E-01	0.6942E+00	0.2302E-01
0.6872E+00	0.7216E-01	0.6965E+00	0.2313E-01
0.6931E+00	0.7210E-01	0.6986E+00	0.2317E-01
0.6987E+00	0.7204E-01	0.7004E+00	0.2322E-01
0.7048E+00	0.7195E-01	0.7028E+00	0.2332E-01
0.7109E+00	0.7192E-01	0.7043E+00	0.2341E-01
0.7160E+00	0.7186E-01	0.7057E+00	0.2356E-01
0.7203E+00	0.7177E-01	0.7075E+00	0.2395E-01
0.7263E+00	0.7167E-01	0.7115E+00	0.2477E-01
0.7339E+00	0.7144E-01	0.7149E+00	0.2502E-01
0.7407E+00	0.7115E-01	0.7235E+00	0.2552E-01
0.7497E+00	0.7067E-01	0.7281E+00	0.2579E-01
0.7571E+00	0.7017E-01	0.7326E+00	0.2604E-01
0.7647E+00	0.6954E-01	0.7369E+00	0.2628E-01
0.7710E+00	0.6894E-01	0.7421E+00	0.2661E-01
0.7786E+00	0.6812E-01	0.7473E+00	0.2688E-01
0.7878E+00	0.6698E-01	0.7513E+00	0.2709E-01
0.7929E+00	0.6628E-01	0.7573E+00	0.2740E-01
0.7972E+00	0.6566E-01	0.7624E+00	0.2765E-01
0.8017E+00	0.6498E-01	0.7685E+00	0.2795E-01
0.8055E+00	0.6437E-01	0.7731E+00	0.2813E-01
0.8100E+00	0.6361E-01	0.7794E+00	0.2840E-01
0.8135E+00	0.6298E-01	0.7839E+00	0.2854E-01
0.8174E+00	0.6229E-01	0.7890E+00	0.2869E-01
0.8205E+00	0.6175E-01	0.7946E+00	0.2882E-01
0.8230E+00	0.6131E-01	0.7983E+00	0.2891E-01
0.8261E+00	0.6071E-01	0.8028E+00	0.2898E-01
0.8290E+00	0.6016E-01	0.8072E+00	0.2905E-01
0.8313E+00	0.5971E-01	0.8117E+00	0.2910E-01
0.8344E+00	0.5909E-01	0.8162E+00	0.2914E-01
0.8376E+00	0.5842E-01	0.8215E+00	0.2917E-01
0.8438E+00	0.5707E-01	0.8261E+00	0.2919E-01

Table A-4. Continued.

U.S.	U.S.	L.S.	L.S.
x/c	*z/c*	*x/c*	*z/c*
0.8478E+00	0.5616E-01	0.8303E+00	0.2918E-01
0.8513E+00	0.5536E-01	0.8357E+00	0.2915E-01
0.8547E+00	0.5453E-01	0.8396E+00	0.2912E-01
0.8580E+00	0.5370E-01	0.8437E+00	0.2907E-01
0.8615E+00	0.5280E-01	0.8477E+00	0.2898E-01
0.8650E+00	0.5188E-01	0.8512E+00	0.2888E-01
0.8681E+00	0.5103E-01	0.8529E+00	0.2884E-01
0.8709E+00	0.5025E-01	0.8545E+00	0.2885E-01
0.8753E+00	0.4898E-01	0.8566E+00	0.2882E-01
0.8790E+00	0.4789E-01	0.8584E+00	0.2881E-01
0.8822E+00	0.4691E-01	0.8592E+00	0.2882E-01
0.8864E+00	0.4557E-01	0.8606E+00	0.2884E-01
0.8896E+00	0.4455E-01	0.8614E+00	0.2884E-01
0.8928E+00	0.4347E-01	0.8621E+00	0.2884E-01
0.8972E+00	0.4195E-01	0.8646E+00	0.2871E-01
0.9009E+00	0.4064E-01	0.8660E+00	0.2850E-01
0.9049E+00	0.3918E-01	0.8680E+00	0.2816E-01
0.9081E+00	0.3801E-01	0.8702E+00	0.2779E-01
0.9111E+00	0.3688E-01	0.8720E+00	0.2754E-01
0.9139E+00	0.3583E-01	0.8745E+00	0.2723E-01
0.9162E+00	0.3495E-01	0.8769E+00	0.2683E-01
0.9186E+00	0.3401E-01	0.8793E+00	0.2645E-01
0.9218E+00	0.3282E-01	0.8826E+00	0.2593E-01
0.9237E+00	0.3207E-01	0.8859E+00	0.2537E-01
0.9259E+00	0.3126E-01	0.8886E+00	0.2490E-01
0.9284E+00	0.3030E-01	0.8917E+00	0.2436E-01
0.9309E+00	0.2933E-01	0.8945E+00	0.2384E-01
0.9339E+00	0.2813E-01	0.8971E+00	0.2336E-01
0.9365E+00	0.2709E-01	0.8998E+00	0.2292E-01
0.9396E+00	0.2587E-01	0.9006E+00	0.2286E-01
0.9425E+00	0.2466E-01	0.9015E+00	0.2279E-01
0.9449E+00	0.2372E-01	0.9030E+00	0.2268E-01
0.9477E+00	0.2255E-01	0.9048E+00	0.2251E-01
0.9502E+00	0.2155E-01	0.9073E+00	0.2188E-01
0.9534E+00	0.2026E-01	0.9102E+00	0.2112E-01
0.9565E+00	0.1890E-01	0.9141E+00	0.2012E-01

Table A-4. Concluded.

U.S.	U.S.	L.S.	L.S.
x/c	*z/c*	*x/c*	*z/c*
0.9588E+00	0.1780E-01	0.9177E+00	0.1916E-01
0.9616E+00	0.1655E-01	0.9213E+00	0.1823E-01
0.9641E+00	0.1568E-01	0.9247E+00	0.1727E-01
0.9666E+00	0.1483E-01	0.9298E+00	0.1593E-01
0.9690E+00	0.1393E-01	0.9348E+00	0.1465E-01
0.9714E+00	0.1296E-01	0.9401E+00	0.1322E-01
0.9733E+00	0.1218E-01	0.9451E+00	0.1185E-01
0.9753E+00	0.1140E-01	0.9496E+00	0.1060E-01
0.9776E+00	0.1047E-01	0.9544E+00	0.9302E-02
0.9793E+00	0.9770E-02	0.9583E+00	0.8425E-02
0.9821E+00	0.8625E-02	0.9626E+00	0.7276E-02
0.9841E+00	0.7824E-02	0.9669E+00	0.5937E-02
0.9868E+00	0.6734E-02	0.9714E+00	0.4613E-02
0.9888E+00	0.5948E-02	0.9751E+00	0.3554E-02
0.9907E+00	0.5160E-02	0.9795E+00	0.2332E-02
0.9927E+00	0.4395E-02	0.9834E+00	0.1233E-02
0.9942E+00	0.3781E-02	0.9873E+00	0.1818E-03
0.9960E+00	0.3109E-02	0.9905E+00	-0.7245E-03
0.9981E+00	0.2327E-02	0.9931E+00	-0.1465E-02
		0.9943E+00	-0.1829E-02
		0.9960E+00	-0.2324E-02
		0.9971E+00	-0.2627E-02
		0.9993E+00	-0.7347E-03
		0.9997E+00	0.1099E-04
		0.1000E+01	0.9038E-03

Table A-5. Design coordinates ($\delta_{LE/TE} = 0/2$, $\eta = 0.93$, $c = 9.1426$ ft).

	U.S.	L.S.		U.S.	L.S.
x/c	z/c	z/c	x/c	z/c	z/c
0.0000	-0.0215	-0.0215	0.2175	0.0297	-0.0167
0.0001	-0.0209	-0.0221	0.2417	0.0335	-0.0147
0.0002	-0.0202	-0.0228	0.2827	0.0396	-0.0108
0.0003	-0.0199	-0.0230	0.3199	0.0447	-0.0068
0.0005	-0.0197	-0.0232	0.3665	0.0509	-0.0014
0.0007	-0.0193	-0.0236	0.4131	0.0568	0.0043
0.0009	-0.0189	-0.0239	0.4596	0.0625	0.0103
0.0012	-0.0185	-0.0242	0.5062	0.0681	0.0167
0.0016	-0.0181	-0.0245	0.5527	0.0735	0.0234
0.0023	-0.0174	-0.0249	0.5993	0.0787	0.0309
0.0034	-0.0165	-0.0256	0.6365	0.0828	0.0370
0.0046	-0.0156	-0.0261	0.6971	0.0889	0.0470
0.0057	-0.0149	-0.0266	0.6971	0.0889	0.0470
0.0069	-0.0142	-0.0269	0.7375	0.0925	0.0541
0.0092	-0.0130	-0.0274	0.7779	0.0955	0.0616
0.0115	-0.0120	-0.0278	0.8183	0.0977	0.0692
0.0137	-0.0111	-0.0281	0.8384	0.0985	0.0730
0.0183	-0.0095	-0.0284	0.8587	0.0990	0.0765
0.0229	-0.0081	-0.0285	0.8788	0.0992	0.0797
0.0298	-0.0062	-0.0285	0.8990	0.0991	0.0826
0.0298	-0.0062	-0.0285	0.9293	0.0985	0.0861
0.0366	-0.0044	-0.0284	0.9495	0.0978	0.0879
0.0458	-0.0022	-0.0280	0.9697	0.0968	0.0892
0.0572	0.0005	-0.0276	0.9798	0.0962	0.0897
0.0687	0.0029	-0.0270	0.9899	0.0956	0.0902
0.0801	0.0053	-0.0264	1.0000	0.0949	0.0906
0.0916	0.0076	-0.0257			
0.1145	0.0119	-0.0242			
0.1374	0.0161	-0.0227			
0.1603	0.0201	-0.0210			
0.1832	0.0240	-0.0193			

Table A-6. Design coordinates ($\delta_{LE/TE} = 0/2$, $\eta = 0.76$, $c = 9.9827$ ft).

	U.S.	L.S.		U.S.	L.S.
x/c	*z/c*	*z/c*	*x/c*	*z/c*	*z/c*
0.0000	-0.0135	-0.0135	0.2214	0.0395	-0.0197
0.0001	-0.0124	-0.0146	0.2679	0.0457	-0.0167
0.0002	-0.0119	-0.0151	0.3072	0.0504	-0.0136
0.0004	-0.0112	-0.0157	0.3563	0.0559	-0.0091
0.0006	-0.0107	-0.0161	0.3563	0.0559	-0.0091
0.0008	-0.0103	-0.0165	0.4054	0.0610	-0.0042
0.0011	-0.0098	-0.0169	0.4545	0.0658	0.0011
0.0015	-0.0093	-0.0173	0.5036	0.0704	0.0069
0.0021	-0.0085	-0.0179	0.5527	0.0747	0.0133
0.0031	-0.0074	-0.0187	0.6018	0.0787	0.0205
0.0042	-0.0065	-0.0195	0.6322	0.0811	0.0259
0.0052	-0.0056	-0.0201	0.6710	0.0839	0.0335
0.0052	-0.0056	-0.0201	0.7009	0.0858	0.0400
0.0063	-0.0049	-0.0206	0.7408	0.0879	0.0486
0.0084	-0.0037	-0.0214	0.7807	0.0892	0.0563
0.0105	-0.0026	-0.0220	0.8205	0.0899	0.0632
0.0126	-0.0017	-0.0225	0.8405	0.0898	0.0662
0.0168	0.0000	-0.0231	0.8604	0.0896	0.0689
0.0210	0.0014	-0.0236	0.8804	0.0891	0.0713
0.0273	0.0033	-0.0240	0.9003	0.0883	0.0732
0.0336	0.0051	-0.0243	0.9302	0.0867	0.0753
0.0419	0.0073	-0.0245	0.9502	0.0853	0.0761
0.0524	0.0098	-0.0247	0.9701	0.0837	0.0765
0.0629	0.0122	-0.0247	0.9801	0.0828	0.0766
0.0734	0.0145	-0.0247	0.9900	0.0819	0.0767
0.0839	0.0166	-0.0246	1.0000	0.0809	0.0769
0.1049	0.0206	-0.0242			
0.1258	0.0244	-0.0237			
0.1468	0.0279	-0.0230			
0.1678	0.0314	-0.0222			
0.1992	0.0363	-0.0209			

Table A-7. Design coordinates ($\delta_{LE/TE} = 0/2$, $\eta = 0.59$, $c = 10.8227$ ft).

	U.S.	L.S.		U.S.	L.S.
x/c	z/c	z/c	x/c	z/c	z/c
0.0000	-0.0072	-0.0072	0.2145	0.0463	-0.0231
0.0001	-0.0059	-0.0085	0.2555	0.0512	-0.0214
0.0001	-0.0059	-0.0085	0.2965	0.0555	-0.0191
0.0002	-0.0053	-0.0091	0.3477	0.0604	-0.0154
0.0004	-0.0046	-0.0098	0.3989	0.0648	-0.0112
0.0008	-0.0035	-0.0108	0.4502	0.0688	-0.0065
0.0010	-0.0029	-0.0114	0.5014	0.0724	-0.0012
0.0013	-0.0023	-0.0119	0.5527	0.0758	0.0048
0.0019	-0.0014	-0.0127	0.6039	0.0788	0.0118
0.0029	-0.0002	-0.0137	0.6367	0.0805	0.0175
0.0039	0.0009	-0.0146	0.6745	0.0822	0.0250
0.0048	0.0017	-0.0152	0.7041	0.0832	0.0320
0.0058	0.0025	-0.0158	0.7435	0.0840	0.0417
0.0077	0.0039	-0.0168	0.7830	0.0841	0.0506
0.0097	0.0050	-0.0175	0.8224	0.0834	0.0578
0.0116	0.0060	-0.0181	0.8619	0.0818	0.0628
0.0155	0.0078	-0.0191	0.8816	0.0807	0.0644
0.0193	0.0093	-0.0198	0.8816	0.0807	0.0644
0.0251	0.0113	-0.0206	0.9014	0.0794	0.0655
0.0309	0.0131	-0.0211	0.9310	0.0769	0.0662
0.0387	0.0153	-0.0217	0.9507	0.0751	0.0663
0.0484	0.0178	-0.0223	0.9704	0.0730	0.0662
0.0580	0.0201	-0.0228	0.9803	0.0719	0.0661
0.0677	0.0222	-0.0231	0.9901	0.0708	0.0660
0.0774	0.0242	-0.0235	1.0000	0.0696	0.0658
0.0774	0.0242	-0.0235			
0.0967	0.0279	-0.0239			
0.1160	0.0314	-0.0242			
0.1354	0.0346	-0.0243			
0.1547	0.0377	-0.0242			
0.1837	0.0421	-0.0239			

Table A-8. Design coordinates ($\delta_{LE/TE} = 0/2$, $\eta = 0.40$, $c = 11.8004$ ft).

	U.S.	L.S.		U.S.	L.S.
x/c	z/c	z/c	x/c	z/c	z/c
0.0000	-0.0014	-0.0014	0.2005	0.0521	-0.0265
0.0001	0.0001	-0.0028	0.2219	0.0545	-0.0262
0.0002	0.0007	-0.0034	0.2432	0.0567	-0.0257
0.0004	0.0016	-0.0042	0.2859	0.0607	-0.0242
0.0007	0.0029	-0.0054	0.3392	0.0650	-0.0214
0.0012	0.0043	-0.0067	0.3926	0.0687	-0.0179
0.0018	0.0053	-0.0076	0.4459	0.0719	-0.0140
0.0027	0.0067	-0.0088	0.4993	0.0745	-0.0092
0.0036	0.0079	-0.0097	0.5526	0.0769	-0.0036
0.0044	0.0088	-0.0106	0.6060	0.0788	0.0032
0.0053	0.0096	-0.0113	0.6412	0.0798	0.0091
0.0071	0.0109	-0.0126	0.6412	0.0798	0.0091
0.0089	0.0121	-0.0136	0.6779	0.0807	0.0162
0.0106	0.0131	-0.0144	0.7072	0.0811	0.0227
0.0142	0.0148	-0.0157	0.7463	0.0812	0.0317
0.0177	0.0163	-0.0167	0.7658	0.0810	0.0362
0.0231	0.0183	-0.0179	0.7853	0.0806	0.0404
0.0284	0.0200	-0.0189	0.8048	0.0799	0.0443
0.0284	0.0200	-0.0189	0.8243	0.0789	0.0478
0.0355	0.0221	-0.0200	0.8439	0.0777	0.0509
0.0443	0.0246	-0.0212	0.8634	0.0762	0.0534
0.0532	0.0269	-0.0222	0.8829	0.0744	0.0553
0.0621	0.0290	-0.0230	0.9024	0.0724	0.0566
0.0710	0.0309	-0.0237	0.9317	0.0688	0.0575
0.0887	0.0345	-0.0246	0.9512	0.0661	0.0573
0.1064	0.0379	-0.0253	0.9707	0.0632	0.0567
0.1242	0.0410	-0.0257	0.9805	0.0617	0.0562
0.1419	0.0439	-0.0260	0.9902	0.0602	0.0557
0.1685	0.0479	-0.0264	1.0000	0.0587	0.0552
0.1873	0.0503	-0.0265			

APPENDIX B

General Listing of Available Wing Pressure and Boundary-Layer Data

Table B provides nominal values for MINF, ALPT and QINF. Camber is either $\delta_{LE/TE}$ or $\delta_{LE/I/M/O}$. Appendices indicate where to find the wing pressure coefficient data and the boundary-layer data. The boundary-layer data, which are all in Appendix K, are in brackets, e.g., [6,7]. Refer to Nomenclature for definitions.

The following example indicates how to use this table. For example, find the wing pressure coefficient data listing for a Camber of 5/10 at nominal conditions of MINF = 0.90, ALPT = 4° and QINF = 300 lb/ft^2. This table is sorted by trailing-edge camber starting at 0° and decreasing to 19° down. Trailing-edge up camber (–1°) is at the end of this table. For the given nominal conditions, the desired data is found in Appendix G. Table G-1 is a summary of the data listed in Table G-2. From Table G-1, the data for MINF = 0.898, ALPT = 4.04° and QINF = 299.5 lb/ft^2 are found in Table G-2 for Flight 211 at Time 11-25-20-500.

Table B. Nominal values for MINF, ALPT and QINF, with appendix letters.

Camber	MINF	ALPT, deg	QINF, lb/ft2	Appendices
2/0	1.41	7	800	H
3/0	1.24	8	650	H
5/0	0.85	11	300	J
10/0	0.60-0.61	2,6,8,12	300-310	C
10/0	0.80-0.81	3,6,8	310	E
2/1	1.19-1.24	5,6,7	570-650	H
1/1	1.41	6	800	H
10/1	0.61	3	310	C
0/2	0.50	4,6,7,8	290-300	I
0/2	0.59-0.61	6,7,8,10,12,13	280-310	C,H,J
[0/2]	[0.60-0.61]	[6,7,8,9,10]	[300-310]	[K]
0/2	0.65	5	340	H
0/2	0.69-0.71	6,7,8,9,10,11,12,13	290-310	D
0/2	0.70	5	400	H
0/2	0.75	4	460	H
[0/2]	[0.76]	[3]	[440-460]	[K]
0/2	0.79-0.81	4,5,6,7,8,9,10,12	280-310	E
[0/2]	[0.79-0.82]	[3,6,7,8,9,10]	[300-320]	[K]
[0/2]	[0.80-0.81]	[4,5,6,7,8,9,10]	[450-470]	[K]
[0/2]	[0.78-0.79]	[3,4]	[490-520]	[K]
0/2	0.80-0.81	4,5,6,7,8,9,10	590-620	J
0/2	0.80	4	530	H
[0/2]	[0.78-0.79]	[4,6,9]	[570-590]	[K]

Table B. Continued.

Camber	MINF	ALPT, deg	QINF, lb/ft2	Appendices
[0/2]	[0.79-0.82]	[3,4,5,6,7,8,9]	[600-640]	[K]
[0/2]	[0.83-0.84]	[8,9]	[340-350]	[K]
0/2	0.84-0.86	5,6,7,8,9,10,11,12	250-310	F,J
[0/2]	[0.84-0.86]	[5,6,7,8,9]	[290-310]	[K]
0/2	0.85-0.86	4,5,6,7,8,9,10	600-610	H,J
0/2	0.88-0.91	5,6,7,8,9,10,12	290-340	G,H
[0/2]	[0.89-0.90]	[6,7,8]	[300]	[K]
0/2	0.88-0.91	4,5,7,8	600-670	H,J
0/2	0.92-0.93	6,8,9	330-340	G,H
[0/2]	[0.90]	[7]	[320]	[K]
0/2	0.94-0.96	6,7,8,9,10	300-340	H
[0/2]	[0.95]	[6,7]	[300]	[K]
0/2	0.94	5	380	H
0/2	0.97-0.99	8	340-350	H
0/2	1.00-1.05	7,8,9	350-410	H
0/2	1.10-1.20	6,7,9	460-590	H
0/2	1.21-1.30	3,4,5,6,7,8,9,11	570-660	H
0/2	1.39-1.41	2,4,5,8,9	790-840	H
1/2	1.22-1.24	4,6	610-650	H
1/2	1.40	4	790	H
2/2	0.60	7	280	C
3/2	0.61	7	280	C
3/2	0.81	9	310	J
4/2	0.61	7	280	C
5/2	0.59-0.61	6,7,8,10,12	280	C
[5/2]	[0.60-0.61]	[7,8,9,10]	[300-320]	[K]
5/2	0.70-0.72	6,7,8,9,10,11,12	290-310	D
5/2	0.79-0.81	5,6,7,8,10	290-310	E
[5/2]	[0.80-0.82]	[6,7,8,9,10]	[290-310]	[K]
[5/2]	[0.80-0.81]	[4,5,6,7,8,9,10]	[450-480]	[K]
5/2	0.85-0.86	4,5,6,7,8,9,10,11,12	280-310	F,J
[5/2]	[0.84-0.85]	[6,7,8,9]	[300]	[K]
5/2	0.90-0.91	6,7,8,9,10,12	300-310	G
[5/2]	[0.90]	[6,7]	[300]	[K]
5/2	0.95	6,7	300	H
6/2	0.61	7	290	C
7/2	0.61	7	290	C
8/2	0.61	7	290	C
9/2	0.61	7	280	C

Table B. Continued.

Camber	MINF	ALPT, deg	QINF, lb/ft2	Appendices
10/2	0.50-0.51	3,6,8	300	I
10/2	0.61	7,8	280-310	C
10/2	0.79-0.81	4,5,6,7,8,10,12	290-310	E
[10/2]	[0.79-0.81]	[6,7,8]	[300-320]	[K]
10/2	0.79-0.81	4,5,6, 8,9	580-610	J
10/2	0.84-0.86	5,6,7,8,9,11,12	290-300	F
10/2	0.84-0.86	4,5,6,7,8,9,10	580-600	J
10/2	0.89-0.91	6,7,8,9,10,11,12	290-310	G
10/2	0.89-0.91	4,6,7,8,9	590-630	J
11/2	0.61	7	280	C
12/2	0.61	7	280	C
13/2	0.61	7	280	C
14/2	0.60	7	280	C
15/2	0.60	7	280	C
16/2	0.60	7	280	C
17/2	0.60	7	280	C
18/2	0.60	7	270	C
19/2	0.59-0.60	8	270	C
0/3	0.71	4	320	J
[0/3]	[0.72-0.73]	[3]	[430-440]	[K]
[0/3/2/2]	[0.75]	[3]	[450]	[K]
[0/3/4/4]	[0.79]	[4]	[520]	[K]
[0/3]	[0.78-0.82]	[4]	[510-570]	[K]
[0/3]	[0.80-0.82]	[4,5,6]	[600-640]	[K]
0/3	0.90	4	600	J
0/3	1.22	3	620	H
0/3	1.41	2,4,5	790-800	H
1/3	0.70	3	300	J
[1/3]	[0.75-0.76]	[4]	[450-470]	[K]
1/3	1.24	4,5	640-650	H
5/3	0.86	10	310	J
10/3	0.60-0.61	2,8,12	300	C
1/4	0.70-0.72	5,6	300-330	J
[1/4]	[0.73]	[5]	[440-450]	[K]
[1/4/3/3]	[0.77]	[5]	[480]	[K]
[1/4/5/5]	[0.75]	[5]	[450]	[K]
1/4	0.80	5	300	J

Table B. Continued.

Camber	MINF	ALPT, deg	QINF, lb/ft2	Appendices
[1/4]	[0.80-0.81]	[5]	[300-310]	[K]
[1/4]	[0.78-0.81]	[6,7]	[500-560]	[K]
[1/4]	[0.80-0.82]	[5,6,7]	[610-640]	[K]
[2/4]	[0.49-0.50]	[5]	[150-160]	[K]
[2/4/4/5]	[0.50]	[5]	[160]	[K]
2/4	0.70	5	290-300	J
5/4	0.86	9	310	J
10/4	0.60	3	300	C
10/4	0.80-0.81	3,6,8	300-310	E
1/5	0.81	6	300	J
[1/5]	[0.81]	[6]	[310]	[K]
[1/5/4/4]	[0.80]	[6]	[550]	[K]
[2/5]	[0.48]	[6]	[150]	[K]
2/5	0.73	7	330	J
[2/5]	[0.77-0.79]	[7]	[490-520]	[K]
[2/5]	[0.77-0.80]	[5,7]	[560-600]	[K]
[2/5/4/5]	[0.78-0.79]	[7]	[500-520]	[K]
[2/5/5/-1]	[0.79]	[7]	[520]	[K]
2/5	0.81	7	300	J
3/5	0.61	7	300	J
[3/5]	[0.58]	[6]	[240-250]	[K]
[3/5/5/6]	[0.60]	[6]	[250]	[K]
[2/6]	[0.80-0.84]	[7,8]	[310-350]	[K]
3/6	0.79-0.81	6,7,8	310-350	J
[3/6]	[0.81-0.84]	[8,9]	[320-350]	[K]
[3/6]	[0.78]	[8]	[500-510]	[K]
5/6	0.59-0.60	5,8,10	280-310	C
5/6	0.69-0.72	5,7,8,9,11	300-330	D
5/6	0.80-0.81	5,6,7,8,9,10	280-310	E
[5/6]	[0.79-0.80]	[5,6,7,8]	[290-300]	[K]
5/6	0.80	7	610	J
[5/6]	[0.80-0.81]	[4]	[600-610]	[K]
5/6	0.84-0.86	4,5,7,8,11,12	280-310	F
5/6	0.89-0.91	5,6,7,8,9,12	270-300	G
10/6	0.59-0.61	2,8,12	290-310	C
10/6	0.80	3,6	300	E

Table B. Continued.

Camber	MINF	ALPT, deg	QINF, lb/ft2	Appendices
3/7	0.81	8	310	J
4/7	0.63	8	330	J
4/7	0.73	9	330	J
[4/7]	[0.73-0.77]	[9]	[440-490]	[K]
[4/7]	[0.80-0.81]	[9]	[310-320]	[K]
5/7	0.62	7	310	J
5/7	0.86	9	310	J
10/7	0.60	3	300	C
10/7	0.81	8	310	E
5/8	0.78-0.79	9,11	310-320	J
5/9	0.86	8	310	J
6/9	0.64	10	340	J
6/9	0.70	11	310	J
10/9	0.59-0.61	2,8,12	290-310	C
10/9	0.80-0.81	3,8	300-310	E
15/9	0.50	4	260	I
0/10	0.51	12	130	I
0/10	0.81	6,8	300	E
0/10	0.89-0.91	5,6,7,8,9,10	280-300	G
5/10	0.51	11	120	I
5/10	0.60-0.61	3,8,10	300-330	C
5/10	0.69-0.70	4,6,7,8,9,10,11	280-320	D
5/10	0.70-0.71	7,8	580-600	J
5/10	0.79-0.80	3,4,5,7,8,9,10	280-300	E
5/10	0.79-0.81	3,4,5,6,7,8	580-620	J
5/10	0.81	5,6	790-810	J
5/10	0.85-0.86	4,5,6,7,8,10	290-310	F,J
5/10	0.85-0.86	3,7,8	580-610	J
5/10	0.89-0.91	4,5,6,7,8,9,10	290-330	G
5/10	0.89-0.90	3,7,8	580-650	J
7/10	0.67	12	280	J
10/10	0.50-0.51	3,4,8	300-310	I
10/10	0.61	3,8,10,12	290-310	C
10/10	0.69-0.70	7,8,11	280-290	D
10/10	0.79-0.81	4,6,7,8,9,10	280-320	E
10/10	0.85	4	300	F

Table B. Continued.

Camber	MINF	ALPT, deg	QINF, lb/ft2	Appendices
10/10	0.90	5,6,8,10	300-320	G
10/10	0.90	4	390	G
15/10	0.48-0.52	4,5	250-280	I
15/10	0.59	3	310	I
0/11	0.79-0.82	4,5,7	290-310	E
0/11	0.91	4	300	G
5/11	0.60	4,5,7	300	C
5/11	0.70-0.71	2,4,6	600-610	J
5/11	0.80	8	300	E
5/11	0.80	3	790	J
5/11	0.85	5	290	F
5/11	0.86	4,5	600	J
5/11	0.89-0.90	5,10	300-310	G
5/11	0.90	4	600	J
6/11	0.78	13	310	J
10/11	0.50	4	300	I
10/11	0.60	4	300	C
10/11	0.79-0.80	5,6,8	300	E
8/12	0.60-0.61	11	290-300	J
8/12	0.64	11	330	J
10/12	0.59-0.61	2,8,12	290-300	C
10/12	0.80	3,10	300	E
8/13	0.60	11	290	J
9/13	0.58	11	270	J
10/13	0.60	3	300	C
10/13	0.80-0.81	3,6,8	300-310	E
5/14	0.80	12	260	E
9/14	0.61	12	300	J
5/15	0.69-0.71	3,4,5,8,9,10	280-310	D,J
5/15	0.78-0.80	4,5,6,7,8,9	220-270	E
10/15	0.59-0.61	2,8,12	290-310	C
10/15	0.79	3	300	E
10/15	0.85	4	260	F
10/15	0.90	4	300	G

Table B. Concluded.

Camber	MINF	ALPT, deg	QINF, lb/ft2	Appendices
5/16	0.69-0.71	4,5,6,7,11,12	280-300	D
10/16	0.50	10	120	I
10/16	0.60-0.61	3,8	300-310	C
10/17	0.61	13	300	J
20/17	0.27-0.29	8,9,10	100-110	I
20/17	0.34-0.37	5,6	140-160	I
10/18	0.60	2,8,12,13	290-300	C
10/18	0.80	12	300	E
20/18	0.28-0.32	7,8,9,10,12	80-120	I
20/18	0.41	4	190	I
20/18	0.60	3	300	C
10/19	0.61	3,6	300-310	C
10/19	0.81	3,8	310	E
3/-1	1.40	9	790	H
4/-1	0.81	10	310	J
4/-1	1.20	8	570	H
5/-1	0.70-0.71	2,6,7,8	580-610	J
5/-1	0.80	11	310	J
5/-1	0.79	8	570-580	J
5/-1	0.85	12,13	310	J
5/-1	1.24	9	660	H
5/-1	1.37-1.39	9,10	750-780	H
6/-1	0.80	13	310	J
7/-1	0.63	11	390	J
7/-1	0.79	13	320	J
7/-1	1.23	10	650	H
9/-1	1.23	10	650	H
12/-1	1.22	11	640	H

APPENDIX C

Wing Pressure Coefficients for Nominal Dynamic Pressure of 300 lb/ft^2 and Mach Number of 0.60.

Leading-edge wing sweep is 26°. Table C-1 contains a summary of the data listing in table C-2. The asterisks (*) in table C-2 indicate invalid values. Camber is $\delta_{LE/TE}$. Refer to Nomenclature for definitions.

Table C-1. Summary data.

Flight	Time	MINF	Camber	ALPT	BETA	QINF	RNPU	CNWP
213	8-33-17-000	0.603	0/2	6.01	0.31	296.9	3.0E+06	0.2618
213	8-33-44-500	0.598	0/2	9.99	0.80	288.1	3.0E+06	0.2881
200	8-32-28-000	0.593	5/2	6.06	-0.24	293.0	3.0E+06	0.2680
200	8-32-37-500	0.597	5/2	6.96	-0.33	295.9	3.0E+06	0.2998
200	8-32-48-000	0.605	5/2	8.02	-0.10	304.3	3.1E+06	0.3360
200	8-33-10-500	0.610	5/2	12.02	0.45	319.0	3.2E+06	0.4931
216	8-49-8-000	0.600	5/2	6.34	0.80	302.6	3.1E+06	0.2473
216	8-49-55-500	0.601	5/2	7.05	-0.10	302.8	3.1E+06	0.2768
216	8-50-12-000	0.600	5/2	7.98	0.37	300.2	3.1E+06	0.3120
216	8-50-29-500	0.606	5/2	10.08	0.43	309.1	3.1E+06	0.3242
213	8-19-36-500	0.598	5/10	3.48	0.14	298.8	3.1E+06	0.3733
213	8-20-2-500	0.608	5/10	8.27	-0.04	307.1	3.1E+06	0.4979
213	8-20-18-500	0.611	5/10	10.02	0.11	329.1	3.3E+06	0.4791
213	8-19-48-500	0.598	5/11	3.90	-0.65	298.3	3.1E+06	0.3951
213	8-19-52-000	0.601	5/11	5.02	-0.59	300.7	3.1E+06	0.3888
213	8-19-57-000	0.603	5/11	7.07	-0.36	302.6	3.1E+06	0.4444
213	8-26-19-500	0.613	10/2	8.00	-0.15	308.5	3.1E+06	0.3682
213	8-28-35-500	0.598	10/11	3.99	-0.53	297.3	3.1E+06	0.4172
213	8-29-21-000	0.607	10/10	7.99	-0.10	289.4	2.9E+06	0.5101
213	8-29-59-500	0.605	10/10	10.22	0.05	310.3	3.2E+06	0.6331
222	9-37-53-000	0.608	10/10	12.14	-0.24	307.4	3.1E+06	0.5239
216	8-52-13-500	0.602	5/6	5.01	0.51	304.2	3.1E+06	0.2997
216	8-52-45-500	0.588	5/6	8.00	0.37	281.1	2.9E+06	0.3856
216	8-54-28-000	0.596	5/6	10.05	0.19	296.6	3.1E+06	0.3976
216	8-56-43-500	0.599	20/18	3.04	0.86	299.5	3.1E+06	0.2664
216	9-29-0-000	0.604	10/18	2.07	-0.04	304.8	3.1E+06	0.3364
216	9-29-6-500	0.607	10/19	3.01	-0.36	306.2	3.1E+06	0.3786
216	9-29-12-000	0.606	10/19	6.05	-0.21	303.4	3.1E+06	0.4802
216	9-29-15-000	0.603	10/18	7.91	-0.24	299.7	3.1E+06	0.5327
216	9-29-18-500	0.600	10/18	11.70	-0.12	295.4	3.0E+06	0.7044

Table C-1. Continued.

Flight	Time	MINF	Camber	ALPT	BETA	QINF	RNPU	CNWP
216	9-30-24-500	0.605	10/15	2.06	-0.01	305.2	3.1E+06	0.3346
216	9-30-42-000	0.608	10/16	8.12	-0.30	305.8	3.1E+06	0.5323
216	9-30-47-500	0.591	10/15	12.30	-0.07	288.2	3.0E+06	0.7297
216	9-31-32-000	0.603	10/12	2.09	0.69	303.3	3.1E+06	0.2984
216	9-31-43-000	0.607	10/12	8.09	-0.41	304.8	3.1E+06	0.5067
216	9-31-47-500	0.594	10/12	12.00	-0.27	290.5	3.0E+06	0.7488
216	9-32-35-000	0.606	10/9	1.99	0.25	306.3	3.1E+06	0.3043
216	9-32-47-000	0.603	10/9	7.92	-0.41	300.2	3.1E+06	0.4942
216	9-32-51-500	0.590	10/9	11.92	-0.27	286.9	3.0E+06	0.7017
216	9-33-28-000	0.599	10/6	2.03	0.02	299.5	3.1E+06	0.3061
216	9-33-39-500	0.610	10/6	8.24	-0.10	309.6	3.1E+06	0.4955
216	9-34-22-000	0.605	10/3	2.08	-0.27	304.8	3.1E+06	0.3029
216	9-34-33-000	0.601	10/3	8.18	0.19	300.9	3.1E+06	0.4915
216	9-34-37-000	0.604	10/3	12.05	0.02	304.6	3.1E+06	0.7376
216	9-35-21-000	0.596	10/0	2.00	0.17	295.2	3.0E+06	0.2870
216	9-35-37-500	0.606	10/0	8.16	0.22	305.5	3.1E+06	0.4777
216	9-35-42-500	0.601	10/0	11.92	-0.04	300.9	3.1E+06	0.7079
198	13-6-58-500	0.600	0/2	7.01	0.60	276.3	2.8E+06	0.2999
198	13-7-40-000	0.604	2/2	6.99	0.63	279.9	2.9E+06	0.3048
198	13-7-42-000	0.605	3/2	7.05	0.60	280.6	2.9E+06	0.3033
198	13-7-45-500	0.605	4/2	6.99	0.55	280.6	2.9E+06	0.3034
198	13-7-48-500	0.606	5/2	7.03	0.60	282.0	2.9E+06	0.3168
198	13-7-52-500	0.610	6/2	6.93	0.52	285.2	2.9E+06	0.3034
198	13-7-55-500	0.611	7/2	7.00	0.52	286.6	2.9E+06	0.3070
198	13-7-59-000	0.610	8/2	6.99	0.63	285.5	2.9E+06	0.3136
198	13-8-1-000	0.609	9/2	7.03	0.60	284.8	2.9E+06	0.3253
198	13-8-4-000	0.608	10/2	7.11	0.63	284.1	2.9E+06	0.3151
198	13-8-8-000	0.608	11/2	7.19	0.71	283.9	2.9E+06	0.3258
198	13-8-11-500	0.607	12/2	7.23	0.63	283.6	2.9E+06	0.3378
198	13-8-14-500	0.606	13/2	7.27	0.60	282.3	2.9E+06	0.3375
198	13-8-17-500	0.604	14/2	7.34	0.71	280.9	2.9E+06	0.3362
198	13-8-21-000	0.602	15/2	7.35	0.63	278.6	2.8E+06	0.3416
198	13-8-24-000	0.600	16/2	7.35	0.57	276.7	2.8E+06	0.3363
198	13-8-27-000	0.598	17/2	7.48	0.50	275.4	2.8E+06	0.3505
198	13-8-30-500	0.597	18/2	7.48	0.50	274.2	2.8E+06	0.3529
198	13-8-33-000	0.595	19/2	7.55	0.57	272.9	2.8E+06	0.3394
198	13-8-36-500	0.593	19/2	7.55	0.55	271.3	2.8E+06	0.3568

Table C-1. Concluded.

Flight	Time	MINF	Camber	ALPT	BETA	QINF	RNPU	CNWP
216	8-52-1-000	0.604	5/6	4.99	0.37	306.2	3.1E+06	0.2850
216	8-52-52-000	0.601	5/6	7.92	0.17	292.7	3.0E+06	0.3783
216	8-54-30-000	0.600	5/6	9.99	-0.10	300.2	3.1E+06	0.4014
216	8-56-49-500	0.601	20/18	2.98	0.89	302.0	3.1E+06	0.2761
216	8-56-59-500	0.598	20/18	3.04	0.74	299.1	3.1E+06	0.2625
216	9-29-19-500	0.596	10/18	13.33	-0.41	291.8	3.0E+06	0.7196
216	9-30-29-500	0.603	10/15	2.04	0.14	303.3	3.1E+06	0.3392
216	9-30-33-500	0.604	10/16	2.93	-0.15	304.0	3.1E+06	0.3619
216	9-30-42-500	0.607	10/15	8.23	-0.50	304.3	3.1E+06	0.5364
216	9-31-36-000	0.603	10/13	2.92	-0.36	302.3	3.1E+06	0.3297
216	9-32-40-000	0.607	10/10	3.26	-0.30	307.4	3.1E+06	0.3315
216	9-33-31-000	0.600	10/7	3.01	-0.56	300.2	3.1E+06	0.3222
216	9-33-47-000	0.587	10/6	12.01	0.19	286.4	3.0E+06	0.7221
216	9-34-25-500	0.602	10/4	3.05	-0.67	301.9	3.1E+06	0.3308
216	9-35-22-500	0.599	10/0	2.03	0.22	298.2	3.1E+06	0.2836
216	9-35-30-000	0.609	10/1	3.11	-0.01	309.6	3.1E+06	0.3061
216	9-35-34-000	0.610	10/0	6.06	-0.67	310.6	3.1E+06	0.4158
198	13-8-42-000	0.590	19/2	7.63	0.60	268.4	2.8E+06	0.3751

Table C-2. Listing of data.

Flight 213, Wing sweep = 26°, Time = 8-33-17-000, MINF = 0.603, Camber = 0/2, ALPT = 6.01, BETA = 0.31, QINF = 296.9, RNPU = 3.0E+06, CNWP = 0.2618

η = 0.93		0.76		0.59		0.40	
			Upper Surface				
x/c	CP	*x/c*	CP	*x/c*	CP	*x/c*	CP
0.020	-0.498	0.000	0.656	0.000	0.341**	0.010	-1.796
0.060	-0.349	0.020	-0.982	0.020	-1.141	0.020	-1.099
0.110	-0.300	0.040	-0.560	0.060	-0.217**	0.060	-0.841
0.200	-0.252	0.060	-0.599	0.090	-0.566	0.110	-0.660
0.230	-0.291	0.090	-0.443	0.110	-0.542	0.140	-0.608
0.400	-0.220	0.130	-0.437	0.130	-3.929**	0.190	-3.929**
0.490	-0.191	0.150	-0.424	0.150	-0.490	0.250	-0.455
0.590	-0.231	0.200	-0.393	0.210	-0.499	0.400	-0.389
0.630	-0.227	0.250	-0.373	0.250	-0.427	0.490	-0.325
0.700	-0.223	0.260	-0.352	0.340	-0.401	0.580	-0.315
0.750	-0.235	0.280	-0.358	0.370	-0.381	0.650	-0.366
0.810	-0.217	0.290	-0.350	0.400	-0.337	0.700	-0.329
0.840	-0.228	0.310	-0.332	0.410	-2.675**	0.750	-0.332
0.900	-0.146	0.320	-0.339	0.430	-0.365	0.800	-0.323
0.960	-0.055	0.340	-0.320	0.440	-0.345	0.830	-0.291
		0.350	-0.174**	0.460	-0.346	0.900	-0.203
		0.370	-0.309	0.490	-0.335	0.960	-0.036
		0.380	-0.337	0.500	-0.342		
		0.400	-0.259	0.520	-0.338		
		0.410	-0.314	0.540	-0.324		
		0.430	-0.291	0.550	-0.309		
		0.440	-0.273	0.580	-0.320		
		0.460	-0.284	0.600	-0.314		
		0.470	-0.310	0.610	-0.318		
		0.490	-0.293	0.650	-0.514		
		0.500	-0.296	0.700	-0.343		
		0.520	-0.284	0.750	-0.346		
		0.530	-0.281	0.820	-0.304		
		0.550	-0.306	0.890	-0.152		
		0.560	-0.301	0.900	-0.134		
		0.580	-0.275	0.960	0.000		
		0.590	-0.306				
		0.600	-0.294				
		0.640	-0.315				
		0.700	-0.306				
		0.750	-0.044**				
		0.820	-0.263				
		0.870	-0.231				
		0.930	-0.113				
		0.960	-0.061				
			Lower Surface				
0.020	-0.034	0.020	0.138	0.020	0.257	0.020	0.562
0.110	-0.107	0.060	0.090	0.060	0.157	0.060	-0.032
0.230	-0.014	0.090	0.037	0.090	0.098	0.110	0.112
0.400	-0.062	0.120	-0.028	0.120	-0.110	0.250	-0.120
0.490	-0.046	0.200	-0.031	0.200	-0.032	0.400	-0.125
0.630	2.492**	0.260	-0.093	0.250	-0.088	0.490	-0.148
0.750	-0.007	0.400	-0.085	0.400	-0.105	0.580	-0.169
0.850	0.041	0.490	-0.104	0.490	-0.060	0.650	-0.091
0.900	0.131	0.580	-0.121	0.580	-0.142	0.750	0.112
0.960	0.109	0.640	0.017	0.650	-0.056	0.830	0.230
		0.750	0.131	0.750	0.149	0.900	0.266
		0.870	0.192	0.890	0.246	0.960	0.215
		0.930	0.174	0.930	0.194		
		0.960	0.130	0.960	0.258		
CN =	0.203		0.333		0.361		0.397

Table C-2. Continued.

Flight 213, Wing sweep = 26°, Time = 8-33-44-500, MINF = 0.598, Camber = 0/2, ALPT = 9.99, BETA = 0.80, QINF = 288.1, RNPU = 3.0E+06, CNWP = 0.2881

η = 0.93		0.76		0.59		0.40	
			Upper Surface				
x/c	CP	*x/c*	CP	*x/c*	CP	*x/c*	CP
0.020	-2.175	0.000	-0.207	0.000	-0.169**	0.010	-2.941
0.060	-0.702	0.020	-2.787	0.020	-2.815	0.020	-2.935
0.110	-0.578	0.040	-0.934	0.060	-0.911**	0.060	-1.566
0.200	-0.430	0.060	-1.194	0.090	-1.150	0.110	-0.885
0.230	-0.434	0.090	-0.734	0.110	-0.925	0.140	-0.718
0.400	-0.316	0.130	-0.710	0.130	-3.999**	0.190	-3.999**
0.490	-0.266	0.150	-0.658	0.150	-0.713	0.250	-0.565
0.590	-0.291	0.200	-0.610	0.210	-0.688	0.400	-0.469
0.630	-0.291	0.250	-0.543	0.250	-0.580	0.490	-0.398
0.700	-0.270	0.260	-0.493	0.340	-0.519	0.580	-0.338
0.750	-0.276	0.280	-0.504	0.370	-0.471	0.650	-0.337
0.810	-0.260	0.290	-0.486	0.400	-0.382	0.700	-0.319
0.840	-0.278	0.310	-0.456	0.410	-2.707**	0.750	-0.308
0.900	-0.209	0.320	-0.459	0.430	-0.435	0.800	-0.299
0.960	-0.104	0.340	-0.453	0.440	-0.401	0.830	-0.224
		0.350	-0.215**	0.460	-0.406	0.900	-0.162
		0.370	-0.429	0.490	-0.365	0.960	-0.110
		0.380	-0.438	0.500	-0.382		
		0.400	-0.373	0.520	-0.399		
		0.410	-0.398	0.540	-0.364		
		0.430	-0.377	0.550	-0.350		
		0.440	-0.346	0.580	-0.347		
		0.460	-0.360	0.600	-0.336		
		0.470	-0.360	0.610	-0.323		
		0.490	-0.353	0.650	-0.515		
		0.500	-0.354	0.700	-0.311		
		0.520	-0.338	0.750	-0.322		
		0.530	-0.329	0.820	-0.224		
		0.550	-0.362	0.890	-0.095		
		0.560	-0.336	0.900	-0.091		
		0.580	-0.312	0.960	0.008		
		0.590	-0.342				
		0.600	-0.325				
		0.640	-0.309				
		0.700	-0.307				
		0.750	-0.026**				
		0.820	-0.233				
		0.870	-0.181				
		0.930	-0.089				
		0.960	-0.055				
			Lower Surface				
0.020	0.401	0.020	0.588	0.020	0.657	0.020	0.783
0.110	0.088	0.060	0.405	0.060	0.455	0.060	-0.013
0.230	0.111	0.090	0.312	0.090	0.367	0.110	0.408
0.400	-0.013	0.120	0.226	0.120	0.138	0.250	0.073
0.490	0.003	0.200	0.161	0.200	0.176	0.400	0.019
0.630	2.617**	0.260	0.074	0.250	0.096	0.490	-0.025
0.750	0.001	0.400	0.026	0.400	0.024	0.580	-0.071
0.850	0.030	0.490	-0.027	0.490	-0.050	0.650	-0.020
0.900	0.121	0.580	-0.050	0.580	-0.058	0.750	0.160
0.960	0.084	0.640	0.068	0.650	-0.050	0.830	0.248
		0.750	0.154	0.750	0.181	0.900	0.254
		0.870	0.198	0.890	0.251	0.960	0.174
		0.930	0.172	0.930	0.196		
		0.960	0.126	0.960	0.165		
CN =	0.370		0.565		0.549		0.633

Table C-2. Continued.

Flight 200, Wing sweep = 26°, Time = 8-32-28-000, MINF = 0.593, Camber = 5/2, ALPT = 6.06, BETA = -0.24, QINF = 293.0, RNPU = 3.0E+06, CNWP = 0.2680

η = 0.93		0.76		0.59		0.40	
			Upper Surface				
x/c	CP	x/c	CP	x/c	CP	x/c	CP
0.020	0.069	0.000	0.778	0.000	0.967**	0.010	-0.765
0.060	-0.144	0.020	-0.328	0.020	-0.313	0.020	-0.521**
0.110	-0.289	0.040	-0.227	0.060	0.653**	0.060	-0.718**
0.200	-0.286	0.060	-0.452	0.090	-0.546	0.110	-0.802
0.230	-0.277	0.090	-0.457	0.110	-0.717	0.140	-0.734
0.400	-0.172	0.130	-0.536	0.130	-0.676	0.190	-4.056**
0.490	-0.151	0.150	-0.609	0.150	-0.633	0.250	-0.433
0.590	-0.183	0.200	-0.463	0.210	-0.535	0.400	-0.352
0.630	-0.191	0.250	-0.389	0.250	-0.360	0.490	-0.311
0.700	-0.160	0.260	-0.315	0.340	-0.333	0.580	-0.281
0.750	-0.207	0.280	-0.345	0.370	-0.350	0.650	-0.302
0.810	-0.185	0.290	-0.336	0.400	-0.329	0.700	-0.295
0.840	-0.173	0.310	-0.319	0.410	-0.308	0.750	-0.309
0.900	-0.113	0.320	-0.307	0.430	-0.311	0.800	-0.307
0.960	-0.021	0.340	-0.283	0.440	-0.291	0.830	-0.273
		0.350	-0.192**	0.460	-0.311	0.900	-0.169
		0.370	-0.278	0.490	-0.243	0.960	-0.009**
		0.380	-0.314	0.500	-0.291		
		0.400	-0.235	0.520	-0.246		
		0.410	-0.297	0.540	-0.280		
		0.430	-0.256	0.550	-0.273		
		0.440	-0.215	0.580	-0.261		
		0.460	-0.299	0.600	-0.285		
		0.470	-0.273	0.610	-0.254		
		0.490	-0.270	0.650	0.021**		
		0.500	-0.261	0.700	-0.301		
		0.520	-0.268	0.750	-0.345		
		0.530	-0.242	0.820	-0.092		
		0.550	-0.236	0.890	-0.147		
		0.560	-0.258	0.900	-0.092		
		0.580	-0.237	0.960	0.027		
		0.590	-0.283				
		0.600	-0.291				
		0.640	-0.264				
		0.700	-0.260				
		0.750	0.009**				
		0.820	-0.193				
		0.870	-0.195				
		0.930	-0.090				
		0.960	-0.031				
			Lower Surface				
0.020	-0.358	0.020	-0.212	0.020	-0.110	0.020	0.174
0.110	-0.108	0.060	0.003	0.060	0.105	0.060	0.018
0.230	0.001	0.090	-0.031	0.090	0.036	0.110	-0.025
0.400	-0.005	0.120	0.006**	0.120	-0.232	0.250	-0.074
0.490	-0.004	0.200	0.018	0.200	-0.046	0.400	-0.084
0.630	0.170**	0.260	-0.059	0.250	-0.017	0.490	-0.130
0.750	0.040	0.400	-0.062	0.400	-0.069	0.580	-0.154
0.850	0.097	0.490	-0.082	0.490	-0.018	0.650	-0.065
0.900	0.188	0.580	-0.088	0.580	-0.094	0.750	0.136
0.960	0.146	0.640	0.041	0.650	0.003	0.830	0.278
		0.750	0.185	0.750	-0.019**	0.900	0.328
		0.870	0.194	0.890	0.277	0.960	0.258
		0.930	0.207	0.930	0.224		
		0.960	0.163	0.960	0.799		
CN =	0.195		0.314		0.346		0.374

Table C-2. Continued.

Flight 200, Wing sweep = 26°, Time = 8-32-37-500, MINF = 0.597, Camber = 5/2, ALPT = 6.96, BETA = -0.33, QINF = 295.9, RNPU = 3.0E+06, CNWP = 0.2998

η = 0.93		0.76		0.59		0.40	
			Upper Surface				
x/c	CP	*x/c*	CP	*x/c*	CP	*x/c*	CP
0.020	-0.110	0.000	0.842	0.000	0.907**	0.010	-1.021
0.060	-0.265	0.020	-0.545	0.020	-0.528	0.020	-0.746**
0.110	-0.400	0.040	-0.396	0.060	0.528**	0.060	-0.910**
0.200	-0.343	0.060	-0.613	0.090	-0.676	0.110	-0.922
0.230	-0.330	0.090	-0.584	0.110	-0.856	0.140	-0.775
0.400	-0.202	0.130	-0.658	0.130	-0.798	0.190	-4.012**
0.490	-0.181	0.150	-0.710	0.150	-0.746	0.250	-0.480
0.590	-0.225	0.200	-0.534	0.210	-0.614	0.400	-0.386
0.630	-0.209	0.250	-0.459	0.250	-0.425	0.490	-0.345
0.700	-0.179	0.260	-0.369	0.340	-0.384	0.580	-0.308
0.750	-0.225	0.280	-0.403	0.370	-0.411	0.650	-0.314
0.810	-0.203	0.290	-0.385	0.400	-0.365	0.700	-0.311
0.840	-0.188	0.310	-0.370	0.410	-0.345	0.750	-0.315
0.900	-0.133	0.320	-0.349	0.430	-0.355	0.800	-0.313
0.960	-0.026	0.340	-0.330	0.440	-0.328	0.830	-0.264
		0.350	-0.188**	0.460	-0.351	0.900	-0.158
		0.370	-0.307	0.490	-0.272	0.960	-0.009**
		0.380	-0.357	0.500	-0.325		
		0.400	-0.275	0.520	-0.286		
		0.410	-0.321	0.540	-0.300		
		0.430	-0.297	0.550	-0.290		
		0.440	-0.234	0.580	-0.285		
		0.460	-0.312	0.600	-0.315		
		0.470	-0.292	0.610	-0.301		
		0.490	-0.300	0.650	0.012**		
		0.500	-0.290	0.700	-0.329		
		0.520	-0.306	0.750	-0.369		
		0.530	-0.270	0.820	-0.102		
		0.550	-0.298	0.890	-0.154		
		0.560	-0.296	0.900	-0.100		
		0.580	-0.264	0.960	0.022		
		0.590	-0.311				
		0.600	-0.322				
		0.640	-0.287				
		0.700	-0.281				
		0.750	0.000**				
		0.820	-0.215				
		0.870	-0.210				
		0.930	-0.102				
		0.960	-0.036				
			Lower Surface				
0.020	-0.256	0.020	-0.070	0.020	0.070	0.020	0.344
0.110	-0.066	0.060	0.086	0.060	0.176	0.060	0.090
0.230	0.031	0.090	0.041	0.090	0.102	0.110	0.049
0.400	0.002	0.120	0.034**	0.120	-0.178	0.250	-0.035
0.490	-0.005	0.200	0.053	0.200	-0.020	0.400	-0.055
0.630	0.174**	0.260	-0.024	0.250	0.019	0.490	-0.108
0.750	0.031	0.400	-0.048	0.400	-0.042	0.580	-0.141
0.850	0.094	0.490	-0.070	0.490	-0.012	0.650	-0.046
0.900	0.169	0.580	-0.076	0.580	-0.087	0.750	0.146
0.960	0.132	0.640	0.043	0.650	0.002	0.830	0.276
		0.750	0.183	0.750	-0.027**	0.900	0.322
		0.870	0.197	0.890	0.280	0.960	0.246
		0.930	0.215	0.930	0.221		
		0.960	0.156	0.960	0.767		
CN =	0.241		0.384		0.407		0.430

Table C-2 Continued.

Flight 200, Wing sweep = 26°, Time = 8-32-48-000, MINF = 0.605, Camber = 5/2, ALPT = 8.02, BETA = -0.10, QINF = 304.3, RNPU = 3.1E+06, CNWP = 0.3360

η = 0.93		0.76		0.59		0.40	
			Upper Surface				
x/c	CP	*x/c*	CP	*x/c*	CP	*x/c*	CP
0.020	-0.363	0.000	0.825	0.000	0.850**	0.010	-1.690
0.060	-0.394	0.020	-0.937	0.020	-0.880	0.020	-1.031**
0.110	-0.454	0.040	-0.625	0.060	0.247**	0.060	-1.109**
0.200	-0.392	0.060	-0.807	0.090	-0.850	0.110	-1.087
0.230	-0.299	0.090	-0.752	0.110	-1.015	0.140	-0.906
0.400	-0.230	0.130	-0.811	0.130	-0.959	0.190	-3.898**
0.490	-0.209	0.150	-0.844	0.150	-0.847	0.250	-0.533
0.590	-0.247	0.200	-0.659	0.210	-0.713	0.400	-0.414
0.630	-0.231	0.250	-0.530	0.250	-0.496	0.490	-0.356
0.700	-0.193	0.260	-0.437	0.340	-0.430	0.580	-0.317
0.750	-0.243	0.280	-0.466	0.370	-0.443	0.650	-0.326
0.810	-0.216	0.290	-0.445	0.400	-0.410	0.700	-0.310
0.840	-0.209	0.310	-0.419	0.410	-0.386	0.750	-0.303
0.900	-0.151	0.320	-0.406	0.430	-0.394	0.800	-0.287
0.960	-0.054	0.340	-0.378	0.440	-0.357	0.830	-0.245
		0.350	-0.191**	0.460	-0.376	0.900	-0.115
		0.370	-0.364	0.490	-0.291	0.960	-0.006**
		0.380	-0.398	0.500	-0.355		
		0.400	-0.308	0.520	-0.309		
		0.410	-0.374	0.540	-0.329		
		0.430	-0.332	0.550	-0.317		
		0.440	-0.282	0.580	-0.326		
		0.460	-0.350	0.600	-0.339		
		0.470	-0.332	0.610	-0.316		
		0.490	-0.328	0.650	0.015**		
		0.500	-0.311	0.700	-0.372		
		0.520	-0.325	0.750	-0.374		
		0.530	-0.295	0.820	-0.102		
		0.550	-0.322	0.890	-0.151		
		0.560	-0.309	0.900	-0.097		
		0.580	-0.286	0.960	0.021		
		0.590	-0.321				
		0.600	-0.334				
		0.640	-0.306				
		0.700	-0.299				
		0.750	0.003**				
		0.820	-0.221				
		0.870	-0.215				
		0.930	-0.111				
		0.960	-0.039				
			Lower Surface				
0.020	-0.111	0.020	0.132	0.020	0.234	0.020	0.532
0.110	-0.009	0.060	0.194	0.060	0.284	0.060	0.153
0.230	0.067	0.090	0.123	0.090	0.194	0.110	0.130
0.400	0.045	0.120	0.123**	0.120	-0.094	0.250	0.027
0.490	0.035	0.200	0.077	0.200	0.017	0.400	-0.022
0.630	0.172**	0.260	0.023	0.250	0.072	0.490	-0.069
0.750	0.030	0.400	-0.014	0.400	-0.013	0.580	-0.104
0.850	0.077	0.490	-0.043	0.490	-0.002	0.650	-0.031
0.900	0.168	0.580	-0.056	0.580	-0.060	0.750	0.163
0.960	0.127	0.640	0.056	0.650	0.005	0.830	0.287
		0.750	0.189	0.750	-0.023**	0.900	0.334
		0.870	0.208	0.890	0.290	0.960	0.248
		0.930	0.212	0.930	0.232		
		0.960	0.162	0.960	0.729		
CN =	0.292		0.473		0.480		0.495

Table C-2. Continued.

Flight 200, Wing sweep = 26°, Time = 8-33-10-500, MINF = 0.610, Camber = 5/2, ALPT = 12.02, BETA = 0.45, QINF = 319.0, RNPU = 3.2E+06, CNWP = 0.4931

η = 0.93		0.76		0.59		0.40	
			Upper Surface				
x/c	CP	*x/c*	CP	*x/c*	CP	*x/c*	CP
0.020	-2.155	0.000	0.088	0.000	0.313**	0.010	-2.677
0.060	-0.932	0.020	-2.630	0.020	-2.403	0.020	-2.629**
0.110	-0.857	0.040	-1.764	0.060	-0.738**	0.060	-2.405**
0.200	-0.637	0.060	-2.071	0.090	-2.202	0.110	-1.120
0.230	-0.572	0.090	-1.113	0.110	-1.501	0.140	-0.988
0.400	-0.359	0.130	-1.199	0.130	-1.117	0.190	-3.842**
0.490	-0.301	0.150	-1.183	0.150	-1.004	0.250	-0.617
0.590	-0.338	0.200	-0.923	0.210	-0.880	0.400	-0.445
0.630	-0.341	0.250	-0.700	0.250	-0.628	0.490	-0.370
0.700	-0.292	0.260	-0.600	0.340	-0.527	0.580	-0.333
0.750	-0.321	0.280	-0.616	0.370	-0.495	0.650	-0.292
0.810	-0.318	0.290	-0.583	0.400	-0.458	0.700	-0.306
0.840	-0.316	0.310	-0.550	0.410	-0.438	0.750	-0.301
0.900	-0.248	0.320	-0.550	0.430	-0.437	0.800	-0.389
0.960	-0.149	0.340	-0.499	0.440	-0.389	0.830	-0.203
		0.350	-0.193**	0.460	-0.412	0.900	-0.219
		0.370	-0.468	0.490	-0.347	0.960	-0.225**
		0.380	-0.509	0.500	-0.377		
		0.400	-0.418	0.520	-0.331		
		0.410	-0.460	0.540	-0.330		
		0.430	-0.416	0.550	-0.328		
		0.440	-0.367	0.580	-0.318		
		0.460	-0.431	0.600	-0.326		
		0.470	-0.436	0.610	-0.305		
		0.490	-0.397	0.650	0.019**		
		0.500	-0.380	0.700	-0.307		
		0.520	-0.388	0.750	-0.337		
		0.530	-0.353	0.820	-0.061		
		0.550	-0.367	0.890	-0.086		
		0.560	-0.362	0.900	-0.046		
		0.580	-0.333	0.960	0.032		
		0.590	-0.381				
		0.600	-0.369				
		0.640	-0.326				
		0.700	-0.314				
		0.750	0.009**				
		0.820	-0.223				
		0.870	-0.203				
		0.930	-0.093				
		0.960	-0.031				
			Lower Surface				
0.020	0.344	0.020	0.628	0.020	0.649	0.020	0.790
0.110	0.172	0.060	0.476	0.060	0.553	0.060	0.352
0.230	0.186	0.090	0.375	0.090	0.439	0.110	0.362
0.400	0.084	0.120	0.326**	0.120	0.152	0.250	0.198
0.490	0.049	0.200	0.185	0.200	0.126	0.400	0.118
0.630	1.816**	0.260	0.180	0.250	0.236	0.490	0.038
0.750	0.030	0.400	0.095	0.400	0.108	0.580	-0.015
0.850	0.060	0.490	0.047	0.490	0.021	0.650	0.022
0.900	0.141	0.580	0.010	0.580	0.007	0.750	0.192
0.960	0.091	0.640	0.109	0.650	0.020	0.830	0.278
		0.750	0.213	0.750	-0.006**	0.900	0.311
		0.870	0.208	0.890	0.282	0.960	0.171
		0.930	0.208	0.930	0.217		
		0.960	0.160	0.960	0.629		
CN =	0.506		0.741		0.712		0.623

Table C-2. Continued.

Flight 216, Wing sweep = 26°, Time = 8-49-8-000, MINF = 0.600, Camber = 5/2, ALPT = 6.34, BETA = 0.80, QINF = 302.6, RNPU = 3.1E+06, CNWP = 0.2473

η = 0.93		0.76		0.59		0.40	
			Upper Surface				
x/c	CP	x/c	CP	x/c	CP	x/c	CP
0.020	-0.016	0.000	0.802	0.000	0.676**	0.010	-1.015
0.060	-0.255	0.020	-0.228	0.020	-0.457	0.020	-0.715
0.110	-0.409	0.040	-0.282	0.060	-0.376**	0.060	-0.865
0.200	-0.356	0.060	-0.519	0.090	-0.678	0.110	-0.897
0.230	-0.336	0.090	-0.541	0.110	-0.734	0.140	-0.750
0.400	-0.230	0.130	-0.652	0.130	-3.974**	0.190	-3.974**
0.490	-0.202	0.150	-0.638	0.150	-0.633	0.250	-0.507
0.590	-0.224	0.200	-0.537	0.210	-0.587	0.400	-0.415
0.630	-0.227	0.250	-0.406	0.250	-0.483	0.490	-0.333
0.700	-0.249	0.260	-0.411	0.340	-0.431	0.580	-0.307
0.750	-0.228	0.280	-0.398	0.370	-0.413	0.650	-0.372
0.810	-0.187	0.290	-0.381	0.400	-0.345	0.700	-0.331
0.840	-0.224	0.310	-0.363	0.410	0.487**	0.750	-0.333
0.900	-0.153	0.320	-0.381	0.430	-0.380	0.800	-0.281
0.960	-0.032	0.340	-0.359	0.440	-0.368	0.830	-0.281
		0.350	-0.132**	0.460	-0.355	0.900	-0.186
		0.370	-0.346	0.490	-0.344	0.960	-0.021
		0.380	-0.354	0.500	-0.346		
		0.400	-0.330	0.520	-0.359		
		0.410	-0.321	0.540	-0.343		
		0.430	-0.298	0.550	-0.318		
		0.440	-0.298	0.580	-0.309		
		0.460	-0.292	0.600	-0.328		
		0.470	-0.320	0.610	-0.330		
		0.490	-0.313	0.650	-0.420		
		0.500	-0.306	0.700	-0.340		
		0.520	-0.295	0.750	-0.309		
		0.530	-0.296	0.820	-0.301		
		0.550	-0.323	0.890	-0.150		
		0.560	-0.322	0.900	-0.125		
		0.580	-0.274	0.960	0.001		
		0.590	-0.317				
		0.600	-0.291				
		0.640	-0.323				
		0.700	-0.303				
		0.750	-0.056**				
		0.820	-0.270				
		0.870	-0.230				
		0.930	-0.114				
		0.960	-0.052				
			Lower Surface				
0.020	-0.322	0.020	-0.137	0.020	0.012	0.020	0.253
0.110	-0.103	0.060	0.036	0.060	0.098	0.060	-0.009
0.230	0.005	0.090	0.018	0.090	0.063	0.110	0.112
0.400	-0.038	0.120	-0.005	0.120	0.000	0.250	-0.089
0.490	-0.030	0.200	0.002	0.200	0.038	0.400	-0.107
0.630	1.900**	0.260	-0.012	0.250	-0.057	0.490	-0.116
0.750	0.001	0.400	-0.053	0.400	-0.081	0.580	-0.163
0.850	0.029	0.490	-0.080	0.490	-0.058	0.650	-0.070
0.900	0.122	0.580	-0.108	0.580	-0.138	0.750	0.133
0.960	0.108	0.640	0.028	0.650	-0.050	0.830	0.232
		0.750	0.134	0.750	-0.015	0.900	0.278
		0.870	0.201	0.890	0.264	0.960	0.222
		0.930	0.175	0.930	0.209		
		0.960	0.128	0.960	0.216		
CN =	0.224		0.360		0.374		0.428

Table C-2. Continued.

Flight 216, Wing sweep = 26°, Time = 8-49-55-500, MINF = 0.601, Camber = 5/2, ALPT = 7.05, BETA = -0.10, QINF = 302.8, RNPU = 3.1E+06, CNWP = 0.2768

η = 0.93		0.76		0.59		0.40	
			Upper Surface				
x/c	CP	*x/c*	CP	*x/c*	CP	*x/c*	CP
0.020	-0.152	0.000	0.813	0.000	0.687**	0.010	-1.306
0.060	-0.303	0.020	-0.455	0.020	-0.656	0.020	-0.871
0.110	-0.459	0.040	-0.417	0.060	-0.455**	0.060	-0.991
0.200	-0.395	0.060	-0.643	0.090	-0.782	0.110	-0.966
0.230	-0.375	0.090	-0.628	0.110	-0.825	0.140	-0.813
0.400	-0.239	0.130	-0.718	0.130	-3.960**	0.190	-3.960**
0.490	-0.203	0.150	-0.716	0.150	-0.693	0.250	-0.536
0.590	-0.237	0.200	-0.601	0.210	-0.644	0.400	-0.437
0.630	-0.240	0.250	-0.446	0.250	-0.521	0.490	-0.344
0.700	-0.262	0.260	-0.447	0.340	-0.447	0.580	-0.319
0.750	-0.249	0.280	-0.417	0.370	-0.446	0.650	-0.373
0.810	-0.203	0.290	-0.409	0.400	-0.383	0.700	-0.333
0.840	-0.240	0.310	-0.393	0.410	0.500**	0.750	-0.327
0.900	-0.165	0.320	-0.413	0.430	-0.397	0.800	-0.275
0.960	-0.048	0.340	-0.388	0.440	-0.390	0.830	-0.274
		0.350	-0.134**	0.460	-0.373	0.900	-0.170
		0.370	-0.373	0.490	-0.353	0.960	-0.015
		0.380	-0.383	0.500	-0.352		
		0.400	-0.342	0.520	-0.378		
		0.410	-0.345	0.540	-0.344		
		0.430	-0.311	0.550	-0.346		
		0.440	-0.303	0.580	-0.328		
		0.460	-0.317	0.600	-0.347		
		0.470	-0.347	0.610	-0.345		
		0.490	-0.330	0.650	-0.463		
		0.500	-0.329	0.700	-0.374		
		0.520	-0.304	0.750	-0.322		
		0.530	-0.311	0.820	-0.316		
		0.550	-0.333	0.890	-0.152		
		0.560	-0.324	0.900	-0.127		
		0.580	-0.295	0.960	0.000		
		0.590	-0.337				
		0.600	-0.307				
		0.640	-0.338				
		0.700	-0.319				
		0.750	-0.047**				
		0.820	-0.279				
		0.870	-0.239				
		0.930	-0.115				
		0.960	-0.054				
			Lower Surface				
0.020	-0.199	0.020	-0.010	0.020	0.119	0.020	0.367
0.110	-0.065	0.060	0.101	0.060	0.161	0.060	-0.011
0.230	0.025	0.090	0.068	0.090	0.118	0.110	0.140
0.400	-0.025	0.120	0.036	0.120	0.057	0.250	-0.052
0.490	-0.010	0.200	0.030	0.200	0.063	0.400	-0.073
0.630	1.911**	0.260	0.008	0.250	-0.022	0.490	-0.088
0.750	-0.001	0.400	-0.029	0.400	-0.063	0.580	-0.135
0.850	0.027	0.490	-0.059	0.490	-0.057	0.650	-0.046
0.900	0.120	0.580	-0.091	0.580	-0.118	0.750	0.145
0.960	0.098	0.640	0.037	0.650	-0.052	0.830	0.238
		0.750	0.140	0.750	-0.017	0.900	0.282
		0.870	0.209	0.890	0.276	0.960	0.223
		0.930	0.176	0.930	0.218		
		0.960	0.133	0.960	0.222		
CN =	0.257		0.413		0.423		0.473

Table C-2. Continued.

Flight 216, Wing sweep = 26°, Time = 8-50-12-000, MINF = 0.600, Camber = 5/2, ALPT = 7.98, BETA = 0.37, QINF = 300.2, RNPU = 3.1E+06, CNWP = 0.3120

η = 0.93		0.76		0.59		0.40	
			Upper Surface				
x/c	CP	*x/c*	CP	*x/c*	CP	*x/c*	CP
0.020	-0.380	0.000	0.749	0.000	0.528**	0.010	-1.947
0.060	-0.460	0.020	-0.770	0.020	-1.016	0.020	-1.091
0.110	-0.557	0.040	-0.642	0.060	-0.650**	0.060	-1.212
0.200	-0.459	0.060	-0.823	0.090	-0.949	0.110	-1.106
0.230	-0.400	0.090	-0.784	0.110	-0.983	0.140	-0.922
0.400	-0.283	0.130	-0.865	0.130	-3.969**	0.190	-3.969**
0.490	-0.242	0.150	-0.835	0.150	-0.812	0.250	-0.600
0.590	-0.270	0.200	-0.695	0.210	-0.727	0.400	-0.459
0.630	-0.269	0.250	-0.517	0.250	-0.594	0.490	-0.370
0.700	-0.269	0.260	-0.523	0.340	-0.500	0.580	-0.337
0.750	-0.266	0.280	-0.495	0.370	-0.493	0.650	-0.376
0.810	-0.223	0.290	-0.460	0.400	-0.442	0.700	-0.339
0.840	-0.269	0.310	-0.446	0.410	0.528**	0.750	-0.334
0.900	-0.193	0.320	-0.469	0.430	-0.449	0.800	-0.268
0.960	-0.080	0.340	-0.436	0.440	-0.428	0.830	-0.248
		0.350	-0.145**	0.460	-0.408	0.900	-0.157
		0.370	-0.421	0.490	-0.405	0.960	-0.027
		0.380	-0.412	0.500	-0.387		
		0.400	-0.393	0.520	-0.402		
		0.410	-0.387	0.540	-0.378		
		0.430	-0.347	0.550	-0.363		
		0.440	-0.352	0.580	-0.353		
		0.460	-0.359	0.600	-0.358		
		0.470	-0.361	0.610	-0.351		
		0.490	-0.365	0.650	-0.471		
		0.500	-0.358	0.700	-0.378		
		0.520	-0.334	0.750	-0.340		
		0.530	-0.343	0.820	-0.322		
		0.550	-0.353	0.890	-0.161		
		0.560	-0.353	0.900	-0.132		
		0.580	-0.322	0.960	0.006		
		0.590	-0.361				
		0.600	-0.328				
		0.640	-0.361				
		0.700	-0.344				
		0.750	-0.056**				
		0.820	-0.296				
		0.870	-0.252				
		0.930	-0.132				
		0.960	-0.070				
			Lower Surface				
0.020	-0.037	0.020	0.150	0.020	0.285	0.020	0.490
0.110	-0.023	0.060	0.188	0.060	0.250	0.060	-0.015
0.230	0.055	0.090	0.154	0.090	0.183	0.110	0.208
0.400	-0.022	0.120	0.098	0.120	0.119	0.250	-0.017
0.490	-0.029	0.200	0.051	0.200	0.079	0.400	-0.049
0.630	1.952**	0.260	0.061	0.250	0.017	0.490	-0.063
0.750	-0.013	0.400	-0.011	0.400	-0.038	0.580	-0.106
0.850	0.012	0.490	-0.044	0.490	-0.057	0.650	-0.051
0.900	0.100	0.580	-0.084	0.580	-0.102	0.750	0.142
0.960	0.087	0.640	0.037	0.650	-0.028	0.830	0.250
		0.750	0.138	0.750	-0.007	0.900	0.274
		0.870	0.197	0.890	0.282	0.960	0.206
		0.930	0.167	0.930	0.223		
		0.960	0.116	0.960	0.192		
CN =	0.302		0.491		0.492		0.533

Table C-2. Continued.

Flight 216, Wing sweep = 26°, Time = 8-50-29-500, MINF = 0.606, Camber = 5/2, ALPT = 10.08, BETA = 0.43, QINF = 309.1, RNPU = 3.1E+06, CNWP = 0.3242

η = 0.93		0.76		0.59		0.40	
Upper Surface							
x/c	CP	x/c	CP	x/c	CP	x/c	CP
0.020	-0.857	0.000	0.423	0.000	0.298**	0.010	-2.275
0.060	-0.725	0.020	-1.750	0.020	-2.201	0.020	-2.331
0.110	-0.697	0.040	-0.323	0.060	-0.995**	0.060	-1.378
0.200	-0.577	0.060	-1.227	0.090	-1.233	0.110	-1.223
0.230	-0.524	0.090	-1.074	0.110	-1.258	0.140	-0.995
0.400	-0.333	0.130	-1.128	0.130	-3.888**	0.190	-3.888**
0.490	-0.284	0.150	-1.032	0.150	-0.962	0.250	-0.574
0.590	-0.303	0.200	-0.845	0.210	-0.855	0.400	-0.485
0.630	-0.310	0.250	-0.615	0.250	-0.675	0.490	-0.374
0.700	-0.319	0.260	-0.604	0.340	-0.565	0.580	-0.305
0.750	-0.301	0.280	-0.576	0.370	-0.533	0.650	-0.343
0.810	-0.264	0.290	-0.551	0.400	-0.450	0.700	-0.307
0.840	-0.311	0.310	-0.516	0.410	0.480**	0.750	-0.302
0.900	-0.235	0.320	-0.541	0.430	-0.486	0.800	-0.258
0.960	-0.111	0.340	-0.500	0.440	-0.463	0.830	-0.215
		0.350	-0.149**	0.460	-0.439	0.900	-0.148
		0.370	-0.472	0.490	-0.415	0.960	-0.098
		0.380	-0.486	0.500	-0.399		
		0.400	-0.445	0.520	-0.417		
		0.410	-0.432	0.540	-0.412		
		0.430	-0.399	0.550	-0.372		
		0.440	-0.395	0.580	-0.354		
		0.460	-0.396	0.600	-0.386		
		0.470	-0.410	0.610	-0.372		
		0.490	-0.397	0.650	-0.488		
		0.500	-0.389	0.700	-0.376		
		0.520	-0.362	0.750	-0.333		
		0.530	-0.373	0.820	-0.295		
		0.550	-0.396	0.890	-0.141		
		0.560	-0.389	0.900	-0.111		
		0.580	-0.342	0.960	0.008		
		0.590	-0.380				
		0.600	-0.330				
		0.640	-0.377				
		0.700	-0.355				
		0.750	-0.035**				
		0.820	-0.302				
		0.870	-0.247				
		0.930	-0.127				
		0.960	-0.060				
Lower Surface							
0.020	0.212	0.020	0.436	0.020	0.483	0.020	0.683
0.110	0.074	0.060	0.343	0.060	0.393	0.060	0.008
0.230	0.124	0.090	0.277	0.090	0.322	0.110	0.323
0.400	0.012	0.120	0.195	0.120	0.232	0.250	0.082
0.490	0.023	0.200	0.121	0.200	0.151	0.400	0.024
0.630	1.862**	0.260	0.131	0.250	0.110	0.490	-0.003
0.750	-0.001	0.400	0.048	0.400	0.029	0.580	-0.065
0.850	0.008	0.490	0.009	0.490	-0.034	0.650	-0.013
0.900	0.104	0.580	-0.045	0.580	-0.069	0.750	0.169
0.960	0.074	0.640	0.073	0.650	-0.047	0.830	0.238
		0.750	0.164	0.750	-0.012	0.900	0.277
		0.870	0.214	0.890	0.275	0.960	0.182
		0.930	0.191	0.930	0.218		
		0.960	0.135	0.960	0.193		
CN =	0.413		0.624		0.586		0.630

Table C-2. Continued.

Flight 213, Wing sweep = 26°, Time = 8-19-36-500, MINF = 0.598, Camber = 5/10, ALPT = 3.48, BETA = 0.14, QINF = 298.8, RNPU = 3.1E+06, CNWP = 0.3733

η = 0.93		0.76		0.59		0.40	
			Upper Surface				
x/c	CP	*x/c*	CP	*x/c*	CP	*x/c*	CP
0.020	0.248	0.000	0.534	0.000	0.554**	0.010	-0.297
0.060	-0.062	0.020	0.110	0.020	0.026	0.020	-0.278
0.110	-0.235	0.040	0.024	0.060	-0.090**	0.060	-0.523
0.200	-0.293	0.060	-0.244	0.090	-0.429	0.110	-0.635
0.230	-0.305	0.090	-0.331	0.110	-0.508	0.140	-0.600
0.400	-0.257	0.130	-0.453	0.130	-3.993**	0.190	-3.993**
0.490	-0.257	0.150	-0.503	0.150	-0.515	0.250	-0.412
0.590	-0.356	0.200	-0.436	0.210	-0.475	0.400	-0.389
0.630	-0.390	0.250	-0.369	0.250	-0.406	0.490	-0.349
0.700	-0.504	0.260	-0.358	0.340	-0.404	0.580	-0.399
0.750	-0.693	0.280	-0.369	0.370	-0.417	0.650	-0.517
0.810	-0.640	0.290	-0.360	0.400	-0.384	0.700	-0.505
0.840	-0.672	0.310	-0.348	0.410	-2.747**	0.750	-0.641
0.900	-0.276	0.320	-0.355	0.430	-0.413	0.800	-0.728
0.960	-0.093	0.340	-0.353	0.440	-0.396	0.830	-0.705
		0.350	-0.170**	0.460	-0.404	0.900	-0.198
		0.370	-0.345	0.490	-0.377	0.960	-0.117
		0.380	-0.373	0.500	-0.422		
		0.400	-0.317	0.520	-0.431		
		0.410	-0.363	0.540	-0.425		
		0.430	-0.354	0.550	-0.415		
		0.440	-0.340	0.580	-0.419		
		0.460	-0.350	0.600	-0.448		
		0.470	-0.378	0.610	-0.479		
		0.490	-0.375	0.650	-0.698		
		0.500	-0.386	0.700	-0.592		
		0.520	-0.375	0.750	-0.647		
		0.530	-0.389	0.820	-0.717		
		0.550	-0.419	0.890	-0.187		
		0.560	-0.421	0.900	-0.173		
		0.580	-0.400	0.960	-0.091		
		0.590	-0.451				
		0.600	-0.455				
		0.640	-0.585				
		0.700	-0.642				
		0.750	-0.040**				
		0.820	-0.550				
		0.870	-0.439				
		0.930	-0.294				
		0.960	-0.212				
			Lower Surface				
0.020	-0.508	0.020	-0.444	0.020	-0.345	0.020	-0.149
0.110	-0.153	0.060	-0.105	0.060	-0.055	0.060	0.008
0.230	-0.031	0.090	-0.087	0.090	-0.050	0.110	-0.082
0.400	0.008	0.120	-0.054	0.120	-0.155	0.250	-0.139
0.490	0.054	0.200	-0.024	0.200	-0.025	0.400	-0.099
0.630	1.362**	0.260	-0.027	0.250	-0.069	0.490	-0.078
0.750	0.168	0.400	-0.003	0.400	-0.035	0.580	-0.037
0.850	0.212	0.490	0.017	0.490	-0.049	0.650	0.103
0.900	0.303	0.580	0.054	0.580	0.023	0.750	0.318
0.960	0.194	0.640	0.257	0.650	-0.055	0.830	0.396
		0.750	0.311	0.750	0.344	0.900	0.452
		0.870	0.388	0.890	0.440	0.960	0.307
		0.930	0.322	0.930	0.359		
		0.960	0.220	0.960	0.336		
CN =	0.380		0.504		0.501		0.498

Table C-2. Continued.

Flight 213, Wing sweep = 26°, Time = 8-20-2-500, MINF = 0.608, Camber = 5/10, ALPT = 8.27, BETA = -0.04, QINF = 307.1, RNPU = 3.1E+06, CNWP = 0.4979

η = 0.93		0.76		0.59		0.40	
			Upper Surface				
x/c	CP	x/c	CP	x/c	CP	x/c	CP
0.020	-0.592	0.000	0.609	0.000	0.317**	0.010	-2.050
0.060	-0.584	0.020	-1.162	0.020	-1.447	0.020	-1.966
0.110	-0.657	0.040	-0.007	0.060	-0.682**	0.060	-1.526
0.200	-0.559	0.060	-1.054	0.090	-1.135	0.110	-1.244
0.230	-0.541	0.090	-0.977	0.110	-1.186	0.140	-1.043
0.400	-0.385	0.130	-1.033	0.130	-3.868**	0.190	-3.868**
0.490	-0.363	0.150	-1.014	0.150	-0.956	0.250	-0.670
0.590	-0.459	0.200	-0.839	0.210	-0.870	0.400	-0.531
0.630	-0.500	0.250	-0.661	0.250	-0.698	0.490	-0.474
0.700	-0.618	0.260	-0.630	0.340	-0.628	0.580	-0.476
0.750	-0.831	0.280	-0.620	0.370	-0.598	0.650	-0.592
0.810	-0.784	0.290	-0.586	0.400	-0.538	0.700	-0.562
0.840	-0.826	0.310	-0.565	0.410	-2.656**	0.750	-0.632
0.900	-0.371	0.320	-0.573	0.430	-0.591	0.800	-0.582
0.960	-0.191	0.340	-0.555	0.440	-0.566	0.830	-0.579
		0.350	-0.193**	0.460	-0.553	0.900	-0.218
		0.370	-0.530	0.490	-0.506	0.960	-0.117
		0.380	-0.560	0.500	-0.549		
		0.400	-0.499	0.520	-0.547		
		0.410	-0.525	0.540	-0.542		
		0.430	-0.503	0.550	-0.541		
		0.440	-0.484	0.580	-0.534		
		0.460	-0.493	0.600	-0.555		
		0.470	-0.526	0.610	-0.566		
		0.490	-0.502	0.650	-0.822		
		0.500	-0.517	0.700	-0.667		
		0.520	-0.479	0.750	-0.704		
		0.530	-0.500	0.820	-0.682		
		0.550	-0.514	0.890	-0.173		
		0.560	-0.540	0.900	-0.165		
		0.580	-0.508	0.960	-0.112		
		0.590	-0.554				
		0.600	-0.551				
		0.640	-0.672				
		0.700	-0.719				
		0.750	-0.019**				
		0.820	-0.604				
		0.870	-0.453				
		0.930	-0.242				
		0.960	-0.187				
			Lower Surface				
0.020	0.099	0.020	0.340	0.020	0.408	0.020	0.590
0.110	0.058	0.060	0.288	0.060	0.351	0.060	0.039
0.230	0.140	0.090	0.238	0.090	0.292	0.110	0.271
0.400	0.071	0.120	0.192	0.120	0.149	0.250	0.077
0.490	0.094	0.200	0.139	0.200	0.155	0.400	0.041
0.630	1.342**	0.260	0.128	0.250	0.134	0.490	0.049
0.750	0.156	0.400	0.108	0.400	0.098	0.580	0.043
0.850	0.176	0.490	0.106	0.490	-0.003	0.650	0.178
0.900	0.263	0.580	0.113	0.580	0.110	0.750	0.368
0.960	0.136	0.640	0.295	0.650	-0.044	0.830	0.447
		0.750	0.323	0.750	0.366	0.900	0.499
		0.870	0.404	0.890	0.470	0.960	0.338
		0.930	0.319	0.930	0.376		
		0.960	0.220	0.960	0.333		
CN =	0.618		0.815		0.804		0.834

Table C-2. Continued.

Flight 213, Wing sweep = 26°, Time = 8-20-18-500, MINF = 0.611, Camber = 5/10, ALPT = 10.02, BETA = 0.11, QINF = 329.1, RNPU = 3.3E+06, CNWP = 0.4791

η = 0.93		0.76		0.59		0.40	
			Upper Surface				
x/c	CP	*x/c*	CP	*x/c*	CP	*x/c*	CP
0.020	-0.977	0.000	0.261	0.000	0.110**	0.010	-2.344
0.060	-0.836	0.020	-2.137	0.020	-2.255	0.020	-2.396
0.110	-0.826	0.040	-1.103	0.060	-1.181**	0.060	-2.207
0.200	-0.671	0.060	-1.390	0.090	-1.251	0.110	-1.268
0.230	-0.672	0.090	-1.247	0.110	-1.323	0.140	-1.102
0.400	-0.451	0.130	-1.303	0.130	-3.827**	0.190	-3.827**
0.490	-0.398	0.150	-1.187	0.150	-1.074	0.250	-0.685
0.590	-0.512	0.200	-0.967	0.210	-0.980	0.400	-0.561
0.630	-0.561	0.250	-0.749	0.250	-0.769	0.490	-0.506
0.700	-0.678	0.260	-0.712	0.340	-0.664	0.580	-0.502
0.750	-0.885	0.280	-0.704	0.370	-0.648	0.650	-0.540
0.810	-0.848	0.290	-0.656	0.400	-0.592	0.700	-0.521
0.840	-0.920	0.310	-0.638	0.410	-2.696**	0.750	-0.562
0.900	-0.408	0.320	-0.638	0.430	-0.617	0.800	-0.532
0.960	-0.248	0.340	-0.621	0.440	-0.592	0.830	-0.448
		0.350	-0.206**	0.460	-0.579	0.900	-0.260
		0.370	-0.580	0.490	-0.544	0.960	-0.209
		0.380	-0.614	0.500	-0.572		
		0.400	-0.551	0.520	-0.562		
		0.410	-0.570	0.540	-0.562		
		0.430	-0.547	0.550	-0.541		
		0.440	-0.526	0.580	-0.544		
		0.460	-0.540	0.600	-0.579		
		0.470	-0.544	0.610	-0.572		
		0.490	-0.541	0.650	-0.841		
		0.500	-0.544	0.700	-0.658		
		0.520	-0.535	0.750	-0.687		
		0.530	-0.536	0.820	-0.622		
		0.550	-0.569	0.890	-0.176		
		0.560	-0.571	0.900	-0.165		
		0.580	-0.535	0.960	-0.116		
		0.590	-0.581				
		0.600	-0.568				
		0.640	-0.687				
		0.700	-0.736				
		0.750	-0.010**				
		0.820	-0.588				
		0.870	-0.425				
		0.930	-0.211				
		0.960	-0.190				
			Lower Surface				
0.020	0.287	0.020	0.581	0.020	0.548	0.020	0.707
0.110	0.120	0.060	0.399	0.060	0.441	0.060	0.015
0.230	0.190	0.090	0.333	0.090	0.375	0.110	0.400
0.400	0.084	0.120	0.257	0.120	0.239	0.250	0.140
0.490	0.102	0.200	0.187	0.200	0.190	0.400	0.102
0.630	1.036**	0.260	0.193	0.250	0.190	0.490	0.084
0.750	0.146	0.400	0.143	0.400	0.132	0.580	0.089
0.850	0.161	0.490	0.127	0.490	-0.050	0.650	0.194
0.900	0.246	0.580	0.130	0.580	0.127	0.750	0.383
0.960	0.107	0.640	0.300	0.650	-0.030	0.830	0.450
		0.750	0.327	0.750	0.386	0.900	0.495
		0.870	0.403	0.890	0.469	0.960	0.311
		0.930	0.306	0.930	0.372		
		0.960	0.206	0.960	0.299		
CN =	0.716		0.945		0.859		0.922

Table C-2. Continued.

Flight 213, Wing sweep = 26°, Time = 8-19-48-500, MINF = 0.598, Camber = 5/11, ALPT = 3.90, BETA = -0.65, QINF = 298.3, RNPU = 3.1E+06, CNWP = 0.3951

η = 0.93		0.76		0.59		0.40	
			Upper Surface				
x/c	CP	x/c	CP	x/c	CP	x/c	CP
0.020	0.200	0.000	0.575	0.000	0.567**	0.010	-0.433
0.060	-0.085	0.020	0.058	0.020	-0.049	0.020	-0.351
0.110	-0.280	0.040	-0.036	0.060	-0.084**	0.060	-0.596
0.200	-0.313	0.060	-0.286	0.090	-0.466	0.110	-0.671
0.230	-0.315	0.090	-0.384	0.110	-0.555	0.140	-0.646
0.400	-0.264	0.130	-0.496	0.130	-3.994**	0.190	-3.994**
0.490	-0.281	0.150	-0.542	0.150	-0.541	0.250	-0.457
0.590	-0.370	0.200	-0.454	0.210	-0.498	0.400	-0.413
0.630	-0.393	0.250	-0.404	0.250	-0.424	0.490	-0.377
0.700	-0.514	0.260	-0.388	0.340	-0.415	0.580	-0.409
0.750	-0.731	0.280	-0.382	0.370	-0.435	0.650	-0.523
0.810	-0.679	0.290	-0.387	0.400	-0.394	0.700	-0.500
0.840	-0.712	0.310	-0.376	0.410	-2.747**	0.750	-0.644
0.900	-0.286	0.320	-0.387	0.430	-0.424	0.800	-0.717
0.960	-0.110	0.340	-0.362	0.440	-0.422	0.830	-0.725
		0.350	-0.185**	0.460	-0.410	0.900	-0.207
		0.370	-0.373	0.490	-0.386	0.960	-0.127
		0.380	-0.401	0.500	-0.442		
		0.400	-0.334	0.520	-0.458		
		0.410	-0.382	0.540	-0.434		
		0.430	-0.361	0.550	-0.423		
		0.440	-0.359	0.580	-0.432		
		0.460	-0.371	0.600	-0.469		
		0.470	-0.407	0.610	-0.489		
		0.490	-0.401	0.650	-0.721		
		0.500	-0.406	0.700	-0.620		
		0.520	-0.416	0.750	-0.680		
		0.530	-0.406	0.820	-0.749		
		0.550	-0.456	0.890	-0.201		
		0.560	-0.435	0.900	-0.173		
		0.580	-0.424	0.960	-0.128		
		0.590	-0.470				
		0.600	-0.460				
		0.640	-0.594				
		0.700	-0.667				
		0.750	-0.045**				
		0.820	-0.545				
		0.870	-0.496				
		0.930	-0.308				
		0.960	-0.214				
			Lower Surface				
0.020	-0.481	0.020	-0.391	0.020	-0.262	0.020	-0.075
0.110	-0.143	0.060	-0.088	0.060	-0.024	0.060	0.014
0.230	-0.025	0.090	-0.073	0.090	-0.029	0.110	-0.061
0.400	0.010	0.120	-0.041	0.120	-0.147	0.250	-0.125
0.490	0.056	0.200	-0.012	0.200	-0.014	0.400	-0.094
0.630	1.370**	0.260	-0.011	0.250	-0.050	0.490	-0.072
0.750	0.167	0.400	0.014	0.400	-0.019	0.580	-0.022
0.850	0.218	0.490	0.030	0.490	-0.044	0.650	0.098
0.900	0.295	0.580	0.053	0.580	0.021	0.750	0.324
0.960	0.177	0.640	0.252	0.650	-0.065	0.830	0.392
		0.750	0.302	0.750	0.343	0.900	0.447
		0.870	0.379	0.890	0.443	0.960	0.313
		0.930	0.302	0.930	0.354		
		0.960	0.226	0.960	0.347		
CN =	0.400		0.531		0.529		0.529

Table C-2. Continued.

Flight 213, Wing sweep = 26°, Time = 8-19-52-000, MINF = 0.601, Camber = 5/11, ALPT = 5.02, BETA = -0.59, QINF = 300.7, RNPU = 3.1E+06, CNWP = 0.3888

η = 0.93		0.76		0.59		0.40	
			Upper Surface				
x/c	CP	*x/c*	CP	*x/c*	CP	*x/c*	CP
0.020	0.050	0.000	0.755	0.000	0.574**	0.010	-0.776
0.060	-0.165	0.020	-0.184	0.020	-0.331	0.020	-0.558
0.110	-0.363	0.040	-0.207	0.060	-0.275**	0.060	-0.761
0.200	-0.382	0.060	-0.465	0.090	-0.614	0.110	-0.838
0.230	-0.368	0.090	-0.509	0.110	-0.694	0.140	-0.747
0.400	-0.288	0.130	-0.617	0.130	-3.959**	0.190	-3.959**
0.490	-0.265	0.150	-0.648	0.150	-0.628	0.250	-0.511
0.590	-0.383	0.200	-0.554	0.210	-0.601	0.400	-0.440
0.630	-0.421	0.250	-0.459	0.250	-0.496	0.490	-0.403
0.700	-0.540	0.260	-0.442	0.340	-0.482	0.580	-0.429
0.750	-0.738	0.280	-0.444	0.370	-0.460	0.650	-0.545
0.810	-0.669	0.290	-0.435	0.400	-0.424	0.700	-0.534
0.840	-0.725	0.310	-0.416	0.410	-2.721**	0.750	-0.664
0.900	-0.293	0.320	-0.427	0.430	-0.461	0.800	-0.721
0.960	-0.119	0.340	-0.417	0.440	-0.457	0.830	-0.701
		0.350	-0.181**	0.460	-0.455	0.900	-0.188
		0.370	-0.406	0.490	-0.418	0.960	-0.124
		0.380	-0.435	0.500	-0.467		
		0.400	-0.382	0.520	-0.470		
		0.410	-0.416	0.540	-0.468		
		0.430	-0.400	0.550	-0.452		
		0.440	-0.387	0.580	-0.425		
		0.460	-0.409	0.600	-0.496		
		0.470	-0.386	0.610	-0.507		
		0.490	-0.423	0.650	-0.726		
		0.500	-0.428	0.700	-0.626		
		0.520	-0.417	0.750	-0.678		
		0.530	-0.427	0.820	-0.725		
		0.550	-0.471	0.890	-0.181		
		0.560	-0.471	0.900	-0.174		
		0.580	-0.442	0.960	-0.116		
		0.590	-0.492				
		0.600	-0.487				
		0.640	-0.622				
		0.700	-0.684				
		0.750	-0.041**				
		0.820	-0.594				
		0.870	-0.445				
		0.930	-0.272				
		0.960	-0.202				
			Lower Surface				
0.020	-0.279	0.020	-0.160	0.020	-0.070	0.020	0.154
0.110	-0.090	0.060	0.025	0.060	0.099	0.060	0.017
0.230	0.016	0.090	0.012	0.090	0.061	0.110	0.038
0.400	0.029	0.120	0.021	0.120	-0.059	0.250	-0.063
0.490	0.089	0.200	0.018	0.200	0.024	0.400	-0.053
0.630	1.363**	0.260	0.022	0.250	-0.002	0.490	-0.038
0.750	0.165	0.400	0.029	0.400	0.009	0.580	-0.008
0.850	0.201	0.490	0.041	0.490	-0.043	0.650	0.123
0.900	0.289	0.580	0.071	0.580	0.047	0.750	0.335
0.960	0.177	0.640	0.265	0.650	-0.060	0.830	0.411
		0.750	0.310	0.750	0.351	0.900	0.461
		0.870	0.413	0.890	0.454	0.960	0.308
		0.930	0.322	0.930	0.366		
		0.960	0.221	0.960	0.331		
CN =	0.447		0.606		0.594		0.606

Table C-2. Continued.

Flight 213, Wing sweep = 26°, Time = 8-19-57-000, MINF = 0.603, Camber = 5/11, ALPT = 7.07, BETA = -0.36, QINF = 302.6, RNPU = 3.1E+06, CNWP = 0.4444

η = 0.93		0.76		0.59		0.40	
			Upper Surface				
x/c	CP	x/c	CP	x/c	CP	x/c	CP
0.020	-0.324	0.000	0.764	0.000	0.473**	0.010	-1.727
0.060	-0.417	0.020	-0.758	0.020	-0.929	0.020	-1.064
0.110	-0.533	0.040	-0.220	0.060	-0.513**	0.060	-1.164
0.200	-0.497	0.060	-0.794	0.090	-0.934	0.110	-1.102
0.230	-0.486	0.090	-0.798	0.110	-0.989	0.140	-0.932
0.400	-0.368	0.130	-0.891	0.130	-3.927**	0.190	-3.927**
0.490	-0.372	0.150	-0.886	0.150	-0.858	0.250	-0.640
0.590	-0.438	0.200	-0.726	0.210	-0.769	0.400	-0.527
0.630	-0.465	0.250	-0.599	0.250	-0.637	0.490	-0.477
0.700	-0.604	0.260	-0.546	0.340	-0.562	0.580	-0.491
0.750	-0.811	0.280	-0.558	0.370	-0.574	0.650	-0.581
0.810	-0.764	0.290	-0.546	0.400	-0.524	0.700	-0.579
0.840	-0.794	0.310	-0.526	0.410	-2.697**	0.750	-0.674
0.900	-0.351	0.320	-0.517	0.430	-0.541	0.800	-0.668
0.960	-0.181	0.340	-0.515	0.440	-0.514	0.830	-0.689
		0.350	-0.185**	0.460	-0.536	0.900	-0.233
		0.370	-0.498	0.490	-0.490	0.960	-0.150
		0.380	-0.515	0.500	-0.540		
		0.400	-0.460	0.520	-0.529		
		0.410	-0.484	0.540	-0.511		
		0.430	-0.468	0.550	-0.515		
		0.440	-0.445	0.580	-0.519		
		0.460	-0.468	0.600	-0.531		
		0.470	-0.505	0.610	-0.577		
		0.490	-0.487	0.650	-0.808		
		0.500	-0.489	0.700	-0.670		
		0.520	-0.463	0.750	-0.714		
		0.530	-0.488	0.820	-0.725		
		0.550	-0.523	0.890	-0.204		
		0.560	-0.534	0.900	-0.191		
		0.580	-0.484	0.960	-0.129		
		0.590	-0.539				
		0.600	-0.540				
		0.640	-0.669				
		0.700	-0.705				
		0.750	-0.034**				
		0.820	-0.568				
		0.870	-0.468				
		0.930	-0.289				
		0.960	-0.237				
			Lower Surface				
0.020	-0.057	0.020	0.157	0.020	0.239	0.020	0.472
0.110	0.004	0.060	0.199	0.060	0.222	0.060	0.039
0.230	0.079	0.090	0.158	0.090	0.198	0.110	0.186
0.400	0.039	0.120	0.097	0.120	0.054	0.250	0.024
0.490	0.063	0.200	0.093	0.200	0.085	0.400	0.020
0.630	1.362**	0.260	0.079	0.250	0.064	0.490	0.021
0.750	0.145	0.400	0.062	0.400	0.046	0.580	0.029
0.850	0.187	0.490	0.081	0.490	-0.025	0.650	0.158
0.900	0.260	0.580	0.081	0.580	0.068	0.750	0.350
0.960	0.142	0.640	0.281	0.650	-0.059	0.830	0.424
		0.750	0.307	0.750	0.356	0.900	0.472
		0.870	0.395	0.890	0.462	0.960	0.314
		0.930	0.306	0.930	0.356		
		0.960	0.198	0.960	0.325		
CN =	0.552		0.733		0.725		0.760

Table C-2. Continued.

Flight 213, Wing sweep = 26°, Time = 8-26-19-500, MINF = 0.613, Camber = 10/2, ALPT = 8.00, BETA = -0.15, QINF = 308.5, RNPU = 3.1E+06, CNWP = 0.3682

η = 0.93		0.76		0.59		0.40	
			Upper Surface				
x/c	CP	*x/c*	CP	*x/c*	CP	*x/c*	CP
0.020	0.130	0.000	0.702	0.000	0.660**	0.010	-0.646
0.060	-0.358	0.020	-0.184	0.020	-0.256	0.020	-0.606
0.110	-0.619	0.040	-0.261	0.060	-0.370**	0.060	-1.231
0.200	-0.548	0.060	-0.721	0.090	-1.036	0.110	-1.449
0.230	-0.472	0.090	-0.886	0.110	-1.276	0.140	-1.081
0.400	-0.293	0.130	-1.151	0.130	-3.803**	0.190	-3.803**
0.490	-0.243	0.150	-1.177	0.150	-0.981	0.250	-0.608
0.590	-0.269	0.200	-0.852	0.210	-0.817	0.400	-0.444
0.630	-0.265	0.250	-0.587	0.250	-0.606	0.490	-0.361
0.700	-0.253	0.260	-0.532	0.340	-0.512	0.580	-0.338
0.750	-0.270	0.280	-0.534	0.370	-0.490	0.650	-0.366
0.810	-0.249	0.290	-0.500	0.400	-0.426	0.700	-0.331
0.840	-0.257	0.310	-0.475	0.410	-2.596**	0.750	-0.335
0.900	-0.191	0.320	-0.480	0.430	-0.447	0.800	-0.291
0.960	-0.082	0.340	-0.454	0.440	-0.427	0.830	-0.257
		0.350	-0.208**	0.460	-0.418	0.900	-0.155
		0.370	-0.423	0.490	-0.390	0.960	-0.044
		0.380	-0.443	0.500	-0.406		
		0.400	-0.382	0.520	-0.401		
		0.410	-0.406	0.540	-0.379		
		0.430	-0.376	0.550	-0.378		
		0.440	-0.356	0.580	-0.371		
		0.460	-0.372	0.600	-0.361		
		0.470	-0.374	0.610	-0.366		
		0.490	-0.361	0.650	-0.521		
		0.500	-0.364	0.700	-0.381		
		0.520	-0.351	0.750	-0.370		
		0.530	-0.341	0.820	-0.316		
		0.550	-0.359	0.890	-0.148		
		0.560	-0.356	0.900	-0.142		
		0.580	-0.317	0.960	-0.001		
		0.590	-0.353				
		0.600	-0.340				
		0.640	-0.355				
		0.700	-0.342				
		0.750	-0.040**				
		0.820	-0.284				
		0.870	-0.241				
		0.930	-0.124				
		0.960	-0.060				
			Lower Surface				
0.020	-0.257	0.020	-0.072	0.020	0.011	0.020	0.219
0.110	-0.014	0.060	0.136	0.060	0.195	0.060	-0.025
0.230	-0.008	0.090	0.112	0.090	0.172	0.110	0.153
0.400	0.001	0.120	0.128	0.120	0.067	0.250	0.018
0.490	-0.002	0.200	-0.017	0.200	-0.012	0.400	-0.037
0.630	2.376**	0.260	0.074	0.250	0.060	0.490	-0.079
0.750	-0.001	0.400	0.001	0.400	-0.018	0.580	-0.118
0.850	0.034	0.490	-0.031	0.490	-0.052	0.650	-0.053
0.900	0.119	0.580	-0.070	0.580	-0.088	0.750	0.146
0.960	0.090	0.640	0.059	0.650	-0.052	0.830	0.244
		0.750	0.148	0.750	0.178	0.900	0.280
		0.870	0.199	0.890	0.264	0.960	0.207
		0.930	0.180	0.930	0.214		
		0.960	0.138	0.960	0.265		
CN =	0.319		0.505		0.536		0.542

Table C-2. Continued.

Flight 213, Wing sweep = 26°, Time = 8-28-35-500, MINF = 0.598, Camber = 10/11, ALPT = 3.99, BETA = -0.53, QINF = 297.3, RNPU = 3.1E+06, CNWP = 0.4172

η = 0.93		0.76		0.59		0.40	
			Upper Surface				
x/c	CP	*x/c*	CP	*x/c*	CP	*x/c*	CP
0.020	0.465	0.000	-0.139	0.000	0.385**	0.010	0.135
0.060	-0.001	0.020	0.445	0.020	0.362	0.020	0.026
0.110	-0.339	0.040	0.218	0.060	0.002**	0.060	-0.556
0.200	-0.390	0.060	-0.192	0.090	-0.503	0.110	-0.905
0.230	-0.344	0.090	-0.430	0.110	-0.698	0.140	-0.738
0.400	-0.273	0.130	-0.646	0.130	-3.994**	0.190	-3.994**
0.490	-0.279	0.150	-0.752	0.150	-0.662	0.250	-0.480
0.590	-0.371	0.200	-0.591	0.210	-0.580	0.400	-0.421
0.630	-0.402	0.250	-0.444	0.250	-0.469	0.490	-0.388
0.700	-0.509	0.260	-0.431	0.340	-0.431	0.580	-0.400
0.750	-0.726	0.280	-0.410	0.370	-0.468	0.650	-0.540
0.810	-0.674	0.290	-0.401	0.400	-0.410	0.700	-0.502
0.840	-0.707	0.310	-0.401	0.410	-2.742**	0.750	-0.639
0.900	-0.277	0.320	-0.411	0.430	-0.447	0.800	-0.727
0.960	-0.089	0.340	-0.384	0.440	-0.414	0.830	-0.709
		0.350	-0.207**	0.460	-0.437	0.900	-0.208
		0.370	-0.389	0.490	-0.418	0.960	-0.121
		0.380	-0.417	0.500	-0.438		
		0.400	-0.347	0.520	-0.477		
		0.410	-0.403	0.540	-0.436		
		0.430	-0.368	0.550	-0.439		
		0.440	-0.373	0.580	-0.434		
		0.460	-0.385	0.600	-0.457		
		0.470	-0.388	0.610	-0.491		
		0.490	-0.392	0.650	-0.770		
		0.500	-0.419	0.700	-0.619		
		0.520	-0.402	0.750	-0.675		
		0.530	-0.419	0.820	-0.735		
		0.550	-0.458	0.890	-0.194		
		0.560	-0.457	0.900	-0.174		
		0.580	-0.411	0.960	-0.122		
		0.590	-0.485				
		0.600	-0.476				
		0.640	-0.593				
		0.700	-0.666				
		0.750	-0.053**				
		0.820	-0.528				
		0.870	-0.531				
		0.930	-0.313				
		0.960	-0.230				
			Lower Surface				
0.020	-1.169	0.020	-0.650	0.020	-0.513	0.020	-0.573
0.110	-0.130	0.060	-0.126	0.060	-0.050	0.060	0.013
0.230	-0.033	0.090	-0.074	0.090	-0.017	0.110	-0.143
0.400	0.025	0.120	0.002	0.120	-0.113	0.250	-0.096
0.490	0.060	0.200	-0.041	0.200	-0.055	0.400	-0.072
0.630	2.417**	0.260	0.010	0.250	-0.006	0.490	-0.058
0.750	0.160	0.400	0.010	0.400	-0.014	0.580	-0.023
0.850	0.203	0.490	0.041	0.490	-0.059	0.650	0.101
0.900	0.263	0.580	0.061	0.580	0.043	0.750	0.310
0.960	0.156	0.640	0.271	0.650	-0.051	0.830	0.393
		0.750	0.303	0.750	0.344	0.900	0.448
		0.870	0.376	0.890	0.451	0.960	0.314
		0.930	0.303	0.930	0.366		
		0.960	0.201	0.960	0.328		
CN =	0.403		0.545		0.558		0.536

Table C-2. Continued.

Flight 213, Wing sweep = 26°, Time = 8-29-21-000, MINF = 0.607, Camber = 10/10, ALPT = 7.99, BETA = -0.10, QINF = 289.4, RNPU = 2.9E+06, CNWP = 0.5101

η = 0.93		0.76		0.59		0.40	
			Upper Surface				
x/c	CP	*x/c*	CP	*x/c*	CP	*x/c*	CP
0.020	0.011	0.000	0.801	0.000	0.607**	0.010	-0.727
0.060	-0.458	0.020	-0.304	0.020	-0.426	0.020	-0.750
0.110	-0.734	0.040	-0.405	0.060	-0.495**	0.060	-1.372
0.200	-0.659	0.060	-0.875	0.090	-1.175	0.110	-1.556
0.230	-0.587	0.090	-1.049	0.110	-1.447	0.140	-1.231
0.400	-0.391	0.130	-1.367	0.130	-3.880**	0.190	-3.880**
0.490	-0.360	0.150	-1.383	0.150	-1.089	0.250	-0.681
0.590	-0.453	0.200	-0.991	0.210	-0.917	0.400	-0.534
0.630	-0.488	0.250	-0.701	0.250	-0.709	0.490	-0.472
0.700	-0.602	0.260	-0.653	0.340	-0.632	0.580	-0.496
0.750	-0.802	0.280	-0.644	0.370	-0.607	0.650	-0.573
0.810	-0.767	0.290	-0.617	0.400	-0.545	0.700	-0.572
0.840	-0.813	0.310	-0.586	0.410	-2.594**	0.750	-0.635
0.900	-0.365	0.320	-0.589	0.430	-0.579	0.800	-0.602
0.960	-0.187	0.340	-0.570	0.440	-0.556	0.830	-0.567
		0.350	-0.235**	0.460	-0.554	0.900	-0.217
		0.370	-0.537	0.490	-0.503	0.960	-0.120
		0.380	-0.574	0.500	-0.557		
		0.400	-0.497	0.520	-0.550		
		0.410	-0.530	0.540	-0.545		
		0.430	-0.511	0.550	-0.534		
		0.440	-0.486	0.580	-0.534		
		0.460	-0.511	0.600	-0.552		
		0.470	-0.510	0.610	-0.572		
		0.490	-0.504	0.650	-0.842		
		0.500	-0.516	0.700	-0.660		
		0.520	-0.497	0.750	-0.707		
		0.530	-0.504	0.820	-0.671		
		0.550	-0.539	0.890	-0.171		
		0.560	-0.541	0.900	-0.169		
		0.580	-0.503	0.960	-0.107		
		0.590	-0.555				
		0.600	-0.557				
		0.640	-0.662				
		0.700	-0.716				
		0.750	-0.022**				
		0.820	-0.612				
		0.870	-0.430				
		0.930	-0.227				
		0.960	-0.177				
			Lower Surface				
0.020	-0.114	0.020	0.069	0.020	0.130	0.020	0.350
0.110	0.058	0.060	0.242	0.060	0.291	0.060	0.043
0.230	0.057	0.090	0.198	0.090	0.258	0.110	0.212
0.400	0.082	0.120	0.198	0.120	0.123	0.250	0.095
0.490	0.098	0.200	0.051	0.200	0.043	0.400	0.053
0.630	2.706**	0.260	0.167	0.250	0.152	0.490	0.032
0.750	0.153	0.400	0.117	0.400	0.101	0.580	0.058
0.850	0.182	0.490	0.107	0.490	-0.009	0.650	0.176
0.900	0.266	0.580	0.110	0.580	0.100	0.750	0.373
0.960	0.140	0.640	0.288	0.650	-0.037	0.830	0.428
		0.750	0.325	0.750	0.375	0.900	0.498
		0.870	0.401	0.890	0.463	0.960	0.333
		0.930	0.329	0.930	0.367		
		0.960	0.216	0.960	0.344		
CN =	0.610		0.830		0.807		0.816

Table C-2. Continued.

Flight 213, Wing sweep = 26°, Time = 8-29-59-500, MINF = 0.605, Camber = 10/10, ALPT = 10.22, BETA = 0.05, QINF = 310.3, RNPU = 3.2E+06, CNWP = 0.6331

η = 0.93		0.76		0.59		0.40	
			Upper Surface				
x/c	CP	x/c	CP	x/c	CP	x/c	CP
0.020	-0.381	0.000	0.759	0.000	0.435**	0.010	-1.515
0.060	-0.758	0.020	-0.856	0.020	-0.966	0.020	-1.110
0.110	-0.967	0.040	0.013	0.060	-0.829**	0.060	-1.848
0.200	-0.766	0.060	-1.263	0.090	-1.658	0.110	-1.685
0.230	-0.690	0.090	-1.339	0.110	-1.607	0.140	-1.422
0.400	-0.470	0.130	-1.646	0.130	-3.906**	0.190	-3.906**
0.490	-0.418	0.150	-1.958	0.150	-1.902	0.250	-0.739
0.590	-0.505	0.200	-1.317	0.210	-1.142	0.400	-0.567
0.630	-0.557	0.250	-0.775	0.250	-0.783	0.490	-0.490
0.700	-0.681	0.260	-0.742	0.340	-0.688	0.580	-0.492
0.750	-0.874	0.280	-0.729	0.370	-0.656	0.650	-0.532
0.810	-0.822	0.290	-0.701	0.400	-0.591	0.700	-0.522
0.840	-0.904	0.310	-0.661	0.410	-2.707**	0.750	-0.567
0.900	-0.386	0.320	-0.655	0.430	-0.609	0.800	-0.584
0.960	-0.245	0.340	-0.645	0.440	-0.601	0.830	-0.440
		0.350	-0.248**	0.460	-0.595	0.900	-0.288
		0.370	-0.597	0.490	-0.525	0.960	-0.251
		0.380	-0.642	0.500	-0.569		
		0.400	-0.562	0.520	-0.579		
		0.410	-0.581	0.540	-0.570		
		0.430	-0.556	0.550	-0.537		
		0.440	-0.525	0.580	-0.559		
		0.460	-0.549	0.600	-0.559		
		0.470	-0.563	0.610	-0.566		
		0.490	-0.546	0.650	-0.831		
		0.500	-0.550	0.700	-0.633		
		0.520	-0.529	0.750	-0.677		
		0.530	-0.537	0.820	-0.598		
		0.550	-0.568	0.890	-0.159		
		0.560	-0.569	0.900	-0.149		
		0.580	-0.534	0.960	-0.091		
		0.590	-0.576				
		0.600	-0.569				
		0.640	-0.674				
		0.700	-0.720				
		0.750	-0.002**				
		0.820	-0.535				
		0.870	-0.440				
		0.930	-0.252				
		0.960	-0.201				
			Lower Surface				
0.020	0.075	0.020	0.363	0.020	0.394	0.020	0.566
0.110	0.121	0.060	0.370	0.060	0.437	0.060	0.044
0.230	0.100	0.090	0.318	0.090	0.357	0.110	0.356
0.400	0.086	0.120	0.315	0.120	0.215	0.250	0.164
0.490	0.130	0.200	0.080	0.200	0.078	0.400	0.110
0.630	2.237**	0.260	0.230	0.250	0.217	0.490	0.097
0.750	0.141	0.400	0.167	0.400	0.160	0.580	0.100
0.850	0.172	0.490	0.146	0.490	0.010	0.650	0.203
0.900	0.246	0.580	0.132	0.580	0.143	0.750	0.375
0.960	0.110	0.640	0.315	0.650	-0.017	0.830	0.440
		0.750	0.325	0.750	0.375	0.900	0.496
		0.870	0.419	0.890	0.464	0.960	0.311
		0.930	0.321	0.930	0.367		
		0.960	0.216	0.960	0.349		
CN =	0.718		0.954		0.950		0.917

Table C-2. Continued.

Flight 222, Wing sweep = 26°, Time = 9-37-53-000, MINF = 0.608, Camber = 10/10, ALPT = 12.14, BETA = -0.24, QINF = 307.4, RNPU = 3.1E+06, CNWP = 0.5239

η = 0.93		0.76		0.59		0.40	
			Upper Surface				
x/c	CP	*x/c*	CP	*x/c*	CP	*x/c*	CP
0.020	-0.854	0.000	0.503	0.000	5.963**	0.010	-1.728
0.060	-1.045	0.020	-1.340	0.020	-1.406	0.020	-1.868
0.110	-1.138	0.040	-1.154	0.060	-1.322**	0.060	-1.908
0.200	-0.867	0.060	-1.573	0.090	-1.964	0.110	-1.658
0.230	-0.696	0.090	-1.793	0.110	-2.101	0.140	-1.296
0.400	-0.489	0.130	-1.572	0.130	-2.084	0.190	-3.868**
0.490	-0.435	0.150	-1.958	0.150	-1.579	0.250	-0.714
0.590	-0.554	0.200	-1.494	0.210	-1.442	0.400	-0.527
0.630	-0.595	0.250	-0.809	0.250	-0.891	0.490	-0.444
0.700	-0.720	0.260	-0.751	0.340	-0.691	0.580	-0.400
0.750	-0.900	0.280	-0.731	0.370	-0.635	0.650	-0.483
0.810	-0.867	0.290	-0.697	0.400	-0.563	0.700	-0.472
0.840	-0.930	0.310	-0.671	0.410	0.577**	0.750	-0.483
0.900	-0.370	0.320	-0.673	0.430	-0.596	0.800	-0.530
0.960	-0.281	0.340	-0.659	0.440	-0.568	0.830	-0.395
		0.350	-0.277**	0.460	-0.550	0.900	-0.396
		0.370	-0.598	0.490	-0.495	0.960	-0.345
		0.380	-0.642	0.500	-0.543		
		0.400	-0.463	0.520	-0.547		
		0.410	-0.595	0.540	-0.530		
		0.430	-0.568	0.550	-0.478		
		0.440	-0.534	0.580	-0.458		
		0.460	-0.561	0.600	-0.530		
		0.470	-0.570	0.610	-0.514		
		0.490	-0.542	0.650	4.626**		
		0.500	-0.555	0.700	-0.567		
		0.520	-0.537	0.750	-0.567		
		0.530	-0.531	0.820	-0.485		
		0.550	-0.568	0.890	-0.207		
		0.560	-0.587	0.900	-0.182		
		0.580	-0.541	0.960	-0.118		
		0.590	-0.603				
		0.600	-0.565				
		0.640	-0.641				
		0.700	-0.690				
		0.750	-0.012**				
		0.820	-0.524				
		0.870	-0.414				
		0.930	-0.195				
		0.960	-0.169				
			Lower Surface				
0.020	0.313	0.020	0.501	0.020	0.569	0.020	0.688
0.110	0.211	0.060	0.469	0.060	0.530	0.060	4.357**
0.230	0.127	0.090	0.394	0.090	0.738**	0.110	0.493
0.400	0.117	0.120	0.395	0.120	0.386	0.250	0.236
0.490	0.151	0.200	0.128	0.200	0.137	0.400	0.186
0.630	1.479**	0.260	0.307	0.250	0.294	0.490	0.147
0.750	0.135	0.400	0.202	0.400	0.180	0.580	0.121
0.850	0.167	0.490	0.167	0.490	0.029	0.650	0.238
0.900	0.248	0.580	0.167	0.580	0.177	0.750	0.379
0.960	0.095	0.640	0.323	0.650	-0.023	0.830	0.483
		0.750	0.331	0.750	0.122	0.900	0.506
		0.870	0.419	0.890	0.469	0.960	0.299
		0.930	0.315	0.930	0.375		
		0.960	0.201	0.960	0.492**		
CN =	0.795		1.044		0.947		0.977

Table C-2. Continued.

Flight 216, Wing sweep = 26°, Time = 8-52-13-500, MINF = 0.602, Camber = 5/6, ALPT = 5.01, BETA = 0.51, QINF = 304.2, RNPU = 3.1E+06, CNWP = 0.2997

η = 0.93		0.76		0.59		0.40	
			Upper Surface				
x/c	CP	*x/c*	CP	*x/c*	CP	*x/c*	CP
0.020	0.117	0.000	0.727	0.000	0.723**	0.010	-0.657
0.060	-0.157	0.020	-0.035	0.020	-0.220	0.020	-0.493
0.110	-0.316	0.040	-0.132	0.060	-0.320**	0.060	-0.693
0.200	-0.331	0.060	-0.386	0.090	-0.564	0.110	-0.773
0.230	-0.330	0.090	-0.461	0.110	-0.636	0.140	-0.671
0.400	-0.250	0.130	-0.555	0.130	-3.944**	0.190	-3.944**
0.490	-0.228	0.150	-0.580	0.150	-0.565	0.250	-0.495
0.590	-0.290	0.200	-0.495	0.210	-0.542	0.400	-0.417
0.630	-0.313	0.250	-0.394	0.250	-0.457	0.490	-0.350
0.700	-0.396	0.260	-0.406	0.340	-0.435	0.580	-0.369
0.750	-0.474	0.280	-0.390	0.370	-0.434	0.650	-0.462
0.810	-0.396	0.290	-0.396	0.400	-0.364	0.700	-0.418
0.840	-0.442	0.310	-0.363	0.410	0.494**	0.750	-0.494
0.900	-0.233	0.320	-0.386	0.430	-0.414	0.800	-0.496
0.960	-0.071	0.340	-0.382	0.440	-0.393	0.830	-0.522
		0.350	-0.145**	0.460	-0.390	0.900	-0.242
		0.370	-0.379	0.490	-0.386	0.960	-0.021
		0.380	-0.374	0.500	-0.390		
		0.400	-0.348	0.520	-0.417		
		0.410	-0.350	0.540	-0.412		
		0.430	-0.319	0.550	-0.391		
		0.440	-0.331	0.580	-0.385		
		0.460	-0.351	0.600	-0.416		
		0.470	-0.365	0.610	-0.424		
		0.490	-0.358	0.650	-0.559		
		0.500	-0.356	0.700	-0.488		
		0.520	-0.339	0.750	-0.488		
		0.530	-0.355	0.820	-0.546		
		0.550	-0.396	0.890	-0.225		
		0.560	-0.383	0.900	-0.189		
		0.580	-0.354	0.960	-0.010		
		0.590	-0.406				
		0.600	-0.387				
		0.640	-0.474				
		0.700	-0.499				
		0.750	-0.036**				
		0.820	-0.501				
		0.870	-0.389				
		0.930	-0.174				
		0.960	-0.097				
			Lower Surface				
0.020	-0.354	0.020	-0.258	0.020	-0.149	0.020	0.093
0.110	-0.112	0.060	0.003	0.060	0.030	0.060	0.014
0.230	0.005	0.090	-0.014	0.090	0.019	0.110	0.025
0.400	-0.004	0.120	-0.018	0.120	-0.045	0.250	-0.104
0.490	0.023	0.200	0.004	0.200	0.028	0.400	-0.091
0.630	1.898**	0.260	-0.006	0.250	-0.048	0.490	-0.091
0.750	0.092	0.400	-0.008	0.400	-0.057	0.580	-0.080
0.850	0.124	0.490	-0.015	0.490	-0.046	0.650	0.016
0.900	0.221	0.580	-0.027	0.580	-0.043	0.750	0.244
0.960	0.155	0.640	0.148	0.650	-0.055	0.830	0.333
		0.750	0.224	0.750	-0.006	0.900	0.374
		0.870	0.323	0.890	0.385	0.960	0.282
		0.930	0.265	0.930	0.315		
		0.960	0.197	0.960	0.293		
CN =	0.317		0.464		0.442		0.487

Table C-2. Continued.

Flight 216, Wing sweep = 26°, Time = 8-52-45-500, MINF = 0.588, Camber = 5/6, ALPT = 8.00, BETA = 0.37, QINF = 281.1, RNPU = 2.9E+06, CNWP = 0.3856

η = 0.93		0.76		0.59		0.40	
			Upper Surface				
x/c	CP	*x/c*	CP	*x/c*	CP	*x/c*	CP
0.020	-0.472	0.000	0.685	0.000	0.497**	0.010	-2.058
0.060	-0.527	0.020	-0.935	0.020	-1.185	0.020	-1.165
0.110	-0.538	0.040	-0.734	0.060	-0.708**	0.060	-1.295
0.200	-0.519	0.060	-0.917	0.090	-1.025	0.110	-1.158
0.230	-0.482	0.090	-0.866	0.110	-1.068	0.140	-0.979
0.400	-0.338	0.130	-0.949	0.130	-4.133**	0.190	-4.133**
0.490	-0.316	0.150	-0.908	0.150	-0.868	0.250	-0.642
0.590	-0.371	0.200	-0.764	0.210	-0.792	0.400	-0.513
0.630	-0.395	0.250	-0.589	0.250	-0.652	0.490	-0.421
0.700	-0.468	0.260	-0.572	0.340	-0.570	0.580	-0.404
0.750	-0.530	0.280	-0.567	0.370	-0.566	0.650	-0.487
0.810	-0.477	0.290	-0.539	0.400	-0.491	0.700	-0.461
0.840	-0.536	0.310	-0.510	0.410	0.670**	0.750	-0.491
0.900	-0.330	0.320	-0.537	0.430	-0.515	0.800	-0.435
0.960	-0.163	0.340	-0.508	0.440	-0.501	0.830	-0.449
		0.350	-0.161**	0.460	-0.486	0.900	-0.191
		0.370	-0.487	0.490	-0.453	0.960	-0.062
		0.380	-0.504	0.500	-0.479		
		0.400	-0.469	0.520	-0.493		
		0.410	-0.462	0.540	-0.476		
		0.430	-0.431	0.550	-0.461		
		0.440	-0.450	0.580	-0.463		
		0.460	-0.441	0.600	-0.482		
		0.470	-0.458	0.610	-0.489		
		0.490	-0.455	0.650	-0.628		
		0.500	-0.448	0.700	-0.535		
		0.520	-0.428	0.750	-0.531		
		0.530	-0.440	0.820	-0.555		
		0.550	-0.464	0.890	-0.209		
		0.560	-0.494	0.900	-0.170		
		0.580	-0.434	0.960	-0.017		
		0.590	-0.484				
		0.600	-0.453				
		0.640	-0.539				
		0.700	-0.554				
		0.750	-0.046**				
		0.820	-0.541				
		0.870	-0.415				
		0.930	-0.195				
		0.960	-0.120				
			Lower Surface				
0.020	0.047	0.020	0.204	0.020	0.334	0.020	0.541
0.110	0.020	0.060	0.241	0.060	0.298	0.060	0.029
0.230	0.096	0.090	0.191	0.090	0.235	0.110	0.267
0.400	0.025	0.120	0.134	0.120	0.152	0.250	0.026
0.490	0.050	0.200	0.095	0.200	0.129	0.400	0.008
0.630	2.190**	0.260	0.103	0.250	0.071	0.490	0.009
0.750	0.072	0.400	0.049	0.400	0.030	0.580	-0.020
0.850	0.090	0.490	0.029	0.490	-0.044	0.650	0.078
0.900	0.183	0.580	0.020	0.580	0.006	0.750	0.267
0.960	0.110	0.640	0.177	0.650	-0.031	0.830	0.351
		0.750	0.235	0.750	0.037	0.900	0.395
		0.870	0.314	0.890	0.388	0.960	0.277
		0.930	0.253	0.930	0.307		
		0.960	0.180	0.960	0.266		
CN =	0.466		0.682		0.637		0.685

Table C-2. Continued.

Flight 216, Wing sweep = 26°, Time = 8-54-28-000, MINF = 0.596, Camber = 5/6, ALPT = 10.05, BETA = 0.19, QINF = 296.6, RNPU = 3.1E+06, CNWP = 0.3976

η = 0.93		0.76		0.59		0.40	
			Upper Surface				
x/c	CP	*x/c*	CP	*x/c*	CP	*x/c*	CP
0.020	-0.971	0.000	0.291	0.000	0.283**	0.010	-2.425
0.060	-0.800	0.020	-2.080	0.020	-2.364	0.020	-2.442
0.110	-0.781	0.040	-0.025	0.060	-0.939**	0.060	-1.428
0.200	-0.640	0.060	-1.322	0.090	-1.319	0.110	-1.244
0.230	-0.574	0.090	-1.155	0.110	-1.332	0.140	-1.040
0.400	-0.391	0.130	-1.198	0.130	-4.015**	0.190	-4.015**
0.490	-0.342	0.150	-1.107	0.150	-1.026	0.250	-0.647
0.590	-0.413	0.200	-0.910	0.210	-0.930	0.400	-0.511
0.630	-0.443	0.250	-0.680	0.250	-0.733	0.490	-0.425
0.700	-0.514	0.260	-0.669	0.340	-0.630	0.580	-0.394
0.750	-0.589	0.280	-0.647	0.370	-0.592	0.650	-0.440
0.810	-0.543	0.290	-0.603	0.400	-0.515	0.700	-0.416
0.840	-0.608	0.310	-0.574	0.410	0.536**	0.750	-0.426
0.900	-0.385	0.320	-0.594	0.430	-0.548	0.800	-0.395
0.960	-0.194	0.340	-0.567	0.440	-0.526	0.830	-0.320
		0.350	-0.153**	0.460	-0.502	0.900	-0.213
		0.370	-0.537	0.490	-0.443	0.960	-0.150
		0.380	-0.553	0.500	-0.489		
		0.400	-0.501	0.520	-0.503		
		0.410	-0.507	0.540	-0.474		
		0.430	-0.470	0.550	-0.469		
		0.440	-0.463	0.580	-0.442		
		0.460	-0.470	0.600	-0.473		
		0.470	-0.488	0.610	-0.473		
		0.490	-0.475	0.650	-0.657		
		0.500	-0.476	0.700	-0.505		
		0.520	-0.453	0.750	-0.505		
		0.530	-0.457	0.820	-0.482		
		0.550	-0.491	0.890	-0.126		
		0.560	-0.492	0.900	-0.097		
		0.580	-0.447	0.960	-0.005		
		0.590	-0.489				
		0.600	-0.467				
		0.640	-0.546				
		0.700	-0.563				
		0.750	-0.012**				
		0.820	-0.527				
		0.870	-0.377				
		0.930	-0.179				
		0.960	-0.108				
			Lower Surface				
0.020	0.293	0.020	0.487	0.020	0.545	0.020	0.710
0.110	0.117	0.060	0.374	0.060	0.434	0.060	0.044
0.230	0.168	0.090	0.321	0.090	0.362	0.110	0.387
0.400	0.070	0.120	0.247	0.120	0.266	0.250	0.123
0.490	0.075	0.200	0.170	0.200	0.188	0.400	0.076
0.630	1.976**	0.260	0.180	0.250	0.165	0.490	0.048
0.750	0.084	0.400	0.116	0.400	0.095	0.580	0.033
0.850	0.093	0.490	0.083	0.490	-0.021	0.650	0.113
0.900	0.183	0.580	0.058	0.580	0.052	0.750	0.280
0.960	0.107	0.640	0.210	0.650	-0.016	0.830	0.360
		0.750	0.246	0.750	0.038	0.900	0.400
		0.870	0.329	0.890	0.403	0.960	0.246
		0.930	0.268	0.930	0.315		
		0.960	0.187	0.960	0.228		
CN =	0.583		0.803		0.724		0.774

Table C-2. Continued.

Flight 216, Wing sweep = 26°, Time = 8-56-43-500, MINF = 0.599, Camber = 20/18, ALPT = 3.04, BETA = 0.86, QINF = 299.5, RNPU = 3.1E+06, CNWP = 0.2664

η = 0.93		0.76		0.59		0.40	
			Upper Surface				
x/c	CP	*x/c*	CP	*x/c*	CP	*x/c*	CP
0.020	0.758	0.000	-1.077	0.000	-0.197**	0.010	0.802
0.060	0.183	0.020	0.849	0.020	0.824	0.020	0.661
0.110	-0.292	0.040	0.630	0.060	0.168**	0.060	-0.166
0.200	-0.518	0.060	0.082	0.090	-0.448	0.110	-1.125
0.230	-0.434	0.090	-0.391	0.110	-0.868	0.140	-0.830
0.400	-0.298	0.130	-0.903	0.130	-3.983**	0.190	-3.983**
0.490	-0.282	0.150	-1.114	0.150	-0.766	0.250	-0.480
0.590	-0.390	0.200	-0.730	0.210	-0.617	0.400	-0.437
0.630	-0.447	0.250	-0.469	0.250	-0.496	0.490	-0.404
0.700	-0.653	0.260	-0.473	0.340	-0.478	0.580	-0.460
0.750	-0.742	0.280	-0.464	0.370	-0.479	0.650	-0.628
0.810	-0.688	0.290	-0.446	0.400	-0.420	0.700	-0.617
0.840	-0.752	0.310	-0.427	0.410	0.524**	0.750	-0.878
0.900	-0.258	0.320	-0.451	0.430	-0.472	0.800	-0.963
0.960	-0.249	0.340	-0.434	0.440	-0.468	0.830	-0.804
		0.350	-0.223**	0.460	-0.463	0.900	-0.387
		0.370	-0.428	0.490	-0.451	0.960	-0.425
		0.380	-0.446	0.500	-0.478		
		0.400	-0.404	0.520	-0.514		
		0.410	-0.423	0.540	-0.492		
		0.430	-0.399	0.550	-0.475		
		0.440	-0.401	0.580	-0.488		
		0.460	-0.420	0.600	-0.543		
		0.470	-0.436	0.610	-0.559		
		0.490	-0.445	0.650	-0.776		
		0.500	-0.445	0.700	-0.704		
		0.520	-0.451	0.750	-0.771		
		0.530	-0.452	0.820	-0.577		
		0.550	-0.491	0.890	-0.339		
		0.560	-0.500	0.900	-0.369		
		0.580	-0.466	0.960	-0.344		
		0.590	-0.525				
		0.600	-0.508				
		0.640	-0.682				
		0.700	-0.769				
		0.750	-0.123**				
		0.820	-0.658				
		0.870	-0.584				
		0.930	-0.327				
		0.960	-0.329				
			Lower Surface				
0.020	-0.221	0.020	-0.370	0.020	-0.469	0.020	-1.275
0.110	-0.173	0.060	-0.356	0.060	-0.510	0.060	0.008
0.230	-0.088	0.090	-0.390	0.090	-0.605	0.110	-0.193
0.400	-0.141	0.120	-0.360	0.120	-0.608	0.250	-0.040
0.490	-0.087	0.200	-0.082	0.200	-0.059	0.400	-0.018
0.630	1.951**	0.260	-0.255	0.250	-0.062	0.490	0.027
0.750	-0.013	0.400	-0.059	0.400	0.114	0.580	0.103
0.850	0.035	0.490	0.070	0.490	-0.056	0.650	0.286
0.900	0.116	0.580	0.170	0.580	0.183	0.750	0.489
0.960	0.114	0.640	0.291	0.650	-0.126	0.830	0.514
		0.750	0.326	0.750	0.002	0.900	0.562
		0.870	0.396	0.890	0.566	0.960	0.383
		0.930	0.365	0.930	0.458		
		0.960	0.253	0.960	0.327		
CN =	0.318		0.538		0.516		0.664

Table C-2. Continued.

Flight 216, Wing sweep = 26°, Time = 9-29-0-000, MINF = 0.604, Camber = 10/18, ALPT = 2.07, BETA = -0.04, QINF = 304.8, RNPU = 3.1E+06, CNWP = 0.3364

η = 0.93		0.76		0.59		0.40	
			Upper Surface				
x/c	CP	x/c	CP	x/c	CP	x/c	CP
0.020	0.577	0.000	-0.391	0.000	0.486**	0.010	0.392
0.060	0.073	0.020	0.615	0.020	0.539	0.020	0.224
0.110	-0.238	0.040	0.359	0.060	-0.092**	0.060	-0.303
0.200	-0.344	0.060	-0.022	0.090	-0.344	0.110	-0.677
0.230	-0.313	0.090	-0.270	0.110	-0.521	0.140	-0.601
0.400	-0.266	0.130	-0.504	0.130	-3.910**	0.190	-3.910**
0.490	-0.269	0.150	-0.600	0.150	-0.517	0.250	-0.413
0.590	-0.386	0.200	-0.479	0.210	-0.470	0.400	-0.404
0.630	-0.454	0.250	-0.357	0.250	-0.415	0.490	-0.384
0.700	-0.670	0.260	-0.373	0.340	-0.421	0.580	-0.438
0.750	-0.805	0.280	-0.357	0.370	-0.428	0.650	-0.623
0.810	-0.764	0.290	-0.361	0.400	-0.372	0.700	-0.602
0.840	-0.851	0.310	-0.349	0.410	0.519**	0.750	-0.866
0.900	-0.311	0.320	-0.374	0.430	-0.430	0.800	-0.976
0.960	-0.307	0.340	-0.369	0.440	-0.435	0.830	-0.830
		0.350	-0.168**	0.460	-0.424	0.900	-0.394
		0.370	-0.369	0.490	-0.424	0.960	-0.429
		0.380	-0.384	0.500	-0.447		
		0.400	-0.349	0.520	-0.485		
		0.410	-0.367	0.540	-0.466		
		0.430	-0.354	0.550	-0.451		
		0.440	-0.356	0.580	-0.458		
		0.460	-0.362	0.600	-0.517		
		0.470	-0.430	0.610	-0.531		
		0.490	-0.406	0.650	-0.704		
		0.500	-0.411	0.700	-0.688		
		0.520	-0.386	0.750	-0.750		
		0.530	-0.419	0.820	-0.567		
		0.550	-0.451	0.890	-0.376		
		0.560	-0.475	0.900	-0.390		
		0.580	-0.434	0.960	-0.382		
		0.590	-0.499				
		0.600	-0.475				
		0.640	-0.663				
		0.700	-0.755				
		0.750	-0.084**				
		0.820	-0.691				
		0.870	-0.458				
		0.930	-0.342				
		0.960	-0.341				
			Lower Surface				
0.020	-1.159	0.020	-0.920	0.020	-0.824	0.020	-1.013
0.110	-0.165	0.060	-0.302	0.060	-0.152	0.060	0.016
0.230	-0.037	0.090	-0.130	0.090	-0.086	0.110	-0.166
0.400	0.075	0.120	-0.042	0.120	-0.055	0.250	-0.119
0.490	0.138	0.200	-0.048	0.200	-0.014	0.400	-0.057
0.630	2.301**	0.260	0.045	0.250	-0.013	0.490	0.016
0.750	0.234	0.400	0.079	0.400	0.019	0.580	0.086
0.850	0.243	0.490	0.122	0.490	-0.058	0.650	0.289
0.900	0.315	0.580	0.186	0.580	0.156	0.750	0.471
0.960	0.174	0.640	0.349	0.650	-0.092	0.830	0.509
		0.750	0.382	0.750	0.006	0.900	0.575
		0.870	0.430	0.890	0.553	0.960	0.415
		0.930	0.370	0.930	0.465		
		0.960	0.242	0.960	0.334		
CN =	0.464		0.572		0.524		0.623

Table C-2. Continued.

Flight 216, Wing sweep = 26°, Time = 9-29-6-500, MINF = 0.607, Camber = 10/19, ALPT = 3.01, BETA = -0.36, QINF = 306.2, RNPU = 3.1E+06, CNWP = 0.3786

η = 0.93		0.76		0.59		0.40	
			Upper Surface				
x/c	CP	*x/c*	CP	*x/c*	CP	*x/c*	CP
0.020	0.538	0.000	-0.195	0.000	0.583**	0.010	0.298
0.060	0.037	0.020	0.530	0.020	0.446	0.020	0.121
0.110	-0.305	0.040	0.279	0.060	-0.233**	0.060	-0.414
0.200	-0.381	0.060	-0.117	0.090	-0.449	0.110	-0.797
0.230	-0.337	0.090	-0.359	0.110	-0.641	0.140	-0.675
0.400	-0.284	0.130	-0.594	0.130	-3.882**	0.190	-3.882**
0.490	-0.294	0.150	-0.690	0.150	-0.578	0.250	-0.455
0.590	-0.404	0.200	-0.549	0.210	-0.539	0.400	-0.433
0.630	-0.467	0.250	-0.407	0.250	-0.467	0.490	-0.399
0.700	-0.690	0.260	-0.415	0.340	-0.453	0.580	-0.446
0.750	-0.825	0.280	-0.413	0.370	-0.468	0.650	-0.629
0.810	-0.736	0.290	-0.405	0.400	-0.410	0.700	-0.614
0.840	-0.829	0.310	-0.387	0.410	0.528**	0.750	-0.873
0.900	-0.326	0.320	-0.414	0.430	-0.462	0.800	-0.958
0.960	-0.336	0.340	-0.403	0.440	-0.463	0.830	-0.834
		0.350	-0.172**	0.460	-0.455	0.900	-0.399
		0.370	-0.400	0.490	-0.449	0.960	-0.441
		0.380	-0.417	0.500	-0.471		
		0.400	-0.337	0.520	-0.505		
		0.410	-0.399	0.540	-0.493		
		0.430	-0.387	0.550	-0.468		
		0.440	-0.386	0.580	-0.480		
		0.460	-0.396	0.600	-0.540		
		0.470	-0.437	0.610	-0.558		
		0.490	-0.429	0.650	-0.703		
		0.500	-0.447	0.700	-0.706		
		0.520	-0.404	0.750	-0.772		
		0.530	-0.442	0.820	-0.595		
		0.550	-0.483	0.890	-0.407		
		0.560	-0.499	0.900	-0.398		
		0.580	-0.461	0.960	-0.401		
		0.590	-0.525				
		0.600	-0.506				
		0.640	-0.695				
		0.700	-0.791				
		0.750	-0.070**				
		0.820	-0.732				
		0.870	-0.424				
		0.930	-0.352				
		0.960	-0.351				
			Lower Surface				
0.020	-1.192	0.020	-0.690	0.020	-0.566	0.020	-0.714
0.110	-0.096	0.060	-0.135	0.060	-0.057	0.060	0.027
0.230	-0.019	0.090	-0.042	0.090	-0.016	0.110	-0.115
0.400	0.089	0.120	0.026	0.120	-0.010	0.250	-0.075
0.490	0.155	0.200	-0.026	0.200	0.010	0.400	-0.017
0.630	2.301**	0.260	0.077	0.250	0.015	0.490	0.034
0.750	0.258	0.400	0.101	0.400	0.049	0.580	0.106
0.850	0.260	0.490	0.136	0.490	-0.037	0.650	0.302
0.900	0.338	0.580	0.200	0.580	0.180	0.750	0.484
0.960	0.167	0.640	0.388	0.650	-0.081	0.830	0.534
		0.750	0.415	0.750	0.021	0.900	0.589
		0.870	0.483	0.890	0.576	0.960	0.424
		0.930	0.401	0.930	0.489		
		0.960	0.262	0.960	0.335		
CN =	0.508		0.650		0.586		0.679

Table C-2. Continued.

Flight 216, Wing sweep = 26°, Time = 9-29-12-000, MINF = 0.606, Camber = 10/19, ALPT = 6.05, BETA = -0.21, QINF = 303.4, RNPU = 3.1E+06, CNWP = 0.4802

η = 0.93		0.76		0.59		0.40	
			Upper Surface				
x/c	CP	*x/c*	CP	*x/c*	CP	*x/c*	CP
0.020	0.244	0.000	0.573	0.000	0.811**	0.010	-0.373
0.060	-0.270	0.020	0.094	0.020	-0.061	0.020	-0.395
0.110	-0.585	0.040	-0.137	0.060	-0.651**	0.060	-0.988
0.200	-0.549	0.060	-0.569	0.090	-0.904	0.110	-1.300
0.230	-0.515	0.090	-0.781	0.110	-1.126	0.140	-1.007
0.400	-0.383	0.130	-1.042	0.130	-3.895**	0.190	-3.895**
0.490	-0.368	0.150	-1.096	0.150	-0.924	0.250	-0.638
0.590	-0.479	0.200	-0.838	0.210	-0.811	0.400	-0.546
0.630	-0.547	0.250	-0.603	0.250	-0.643	0.490	-0.488
0.700	-0.766	0.260	-0.599	0.340	-0.584	0.580	-0.524
0.750	-0.848	0.280	-0.581	0.370	-0.597	0.650	-0.677
0.810	-0.833	0.290	-0.564	0.400	-0.493	0.700	-0.658
0.840	-0.931	0.310	-0.540	0.410	0.555**	0.750	-0.872
0.900	-0.425	0.320	-0.563	0.430	-0.562	0.800	-0.776
0.960	-0.440	0.340	-0.547	0.440	-0.557	0.830	-0.618
		0.350	-0.218**	0.460	-0.560	0.900	-0.403
		0.370	-0.533	0.490	-0.541	0.960	-0.453
		0.380	-0.553	0.500	-0.569		
		0.400	-0.321	0.520	-0.601		
		0.410	-0.512	0.540	-0.577		
		0.430	-0.491	0.550	-0.555		
		0.440	-0.494	0.580	-0.562		
		0.460	-0.509	0.600	-0.620		
		0.470	-0.528	0.610	-0.621		
		0.490	-0.522	0.650	-0.763		
		0.500	-0.529	0.700	-0.766		
		0.520	-0.507	0.750	-0.808		
		0.530	-0.522	0.820	-0.584		
		0.550	-0.551	0.890	-0.419		
		0.560	-0.562	0.900	-0.451		
		0.580	-0.536	0.960	-0.438		
		0.590	-0.596				
		0.600	-0.570				
		0.640	-0.748				
		0.700	-0.829				
		0.750	-0.027**				
		0.820	-0.742				
		0.870	-0.438				
		0.930	-0.373				
		0.960	-0.382				
			Lower Surface				
0.020	-0.281	0.020	-0.148	0.020	-0.070	0.020	0.012
0.110	0.023	0.060	0.150	0.060	0.177	0.060	0.046
0.230	0.034	0.090	0.133	0.090	0.167	0.110	0.126
0.400	0.098	0.120	0.157	0.120	0.141	0.250	0.036
0.490	0.143	0.200	0.025	0.200	0.051	0.400	0.048
0.630	2.345**	0.260	0.164	0.250	0.114	0.490	0.087
0.750	0.265	0.400	0.143	0.400	0.116	0.580	0.145
0.850	0.270	0.490	0.168	0.490	-0.007	0.650	0.312
0.900	0.352	0.580	0.210	0.580	0.211	0.750	0.506
0.960	0.140	0.640	0.411	0.650	-0.052	0.830	0.547
		0.750	0.427	0.750	0.025	0.900	0.602
		0.870	0.519	0.890	0.611	0.960	0.427
		0.930	0.420	0.930	0.487		
		0.960	0.269	0.960	0.319		
CN =	0.651		0.847		0.776		0.864

Table C-2. Continued.

Flight 216, Wing sweep = 26°, Time = 9-29-15-000, MINF = 0.603, Camber = 10/18, ALPT = 7.91, BETA = -0.24, QINF = 299.7, RNPU = 3.1E+06, CNWP = 0.5327

η = 0.93		0.76		0.59		0.40	
			Upper Surface				
x/c	CP	*x/c*	CP	*x/c*	CP	*x/c*	CP
0.020	-0.056	0.000	0.803	0.000	0.845**	0.010	-0.785
0.060	-0.505	0.020	-0.347	0.020	-0.517	0.020	-0.785
0.110	-0.756	0.040	-0.093	0.060	-0.932**	0.060	-1.408
0.200	-0.690	0.060	-0.917	0.090	-1.227	0.110	-1.560
0.230	-0.600	0.090	-1.095	0.110	-1.472	0.140	-1.238
0.400	-0.424	0.130	-1.409	0.130	-3.926**	0.190	-3.926**
0.490	-0.415	0.150	-1.403	0.150	-1.122	0.250	-0.706
0.590	-0.542	0.200	-1.026	0.210	-0.947	0.400	-0.598
0.630	-0.599	0.250	-0.732	0.250	-0.764	0.490	-0.538
0.700	-0.815	0.260	-0.711	0.340	-0.679	0.580	-0.573
0.750	-0.881	0.280	-0.688	0.370	-0.667	0.650	-0.715
0.810	-0.877	0.290	-0.661	0.400	-0.608	0.700	-0.696
0.840	-0.992	0.310	-0.627	0.410	0.579**	0.750	-0.852
0.900	-0.461	0.320	-0.649	0.430	-0.642	0.800	-0.755
0.960	-0.485	0.340	-0.624	0.440	-0.629	0.830	-0.666
		0.350	-0.216**	0.460	-0.613	0.900	-0.368
		0.370	-0.603	0.490	-0.592	0.960	-0.362
		0.380	-0.620	0.500	-0.610		
		0.400	-0.294	0.520	-0.611		
		0.410	-0.574	0.540	-0.628		
		0.430	-0.547	0.550	-0.604		
		0.440	-0.536	0.580	-0.591		
		0.460	-0.555	0.600	-0.650		
		0.470	-0.581	0.610	-0.665		
		0.490	-0.568	0.650	-0.817		
		0.500	-0.575	0.700	-0.781		
		0.520	-0.552	0.750	-0.820		
		0.530	-0.567	0.820	-0.577		
		0.550	-0.599	0.890	-0.429		
		0.560	-0.619	0.900	-0.420		
		0.580	-0.571	0.960	-0.430		
		0.590	-0.630				
		0.600	-0.600				
		0.640	-0.772				
		0.700	-0.852				
		0.750	-0.028**				
		0.820	-0.659				
		0.870	-0.346				
		0.930	-0.342				
		0.960	-0.344				
			Lower Surface				
0.020	0.001	0.020	0.162	0.020	0.209	0.020	0.378
0.110	0.095	0.060	0.293	0.060	0.316	0.060	0.063
0.230	0.084	0.090	0.259	0.090	0.294	0.110	0.266
0.400	0.119	0.120	0.220	0.120	0.243	0.250	0.120
0.490	0.168	0.200	0.078	0.200	0.110	0.400	0.117
0.630	2.391**	0.260	0.226	0.250	0.198	0.490	0.146
0.750	0.261	0.400	0.195	0.400	0.169	0.580	0.188
0.850	0.259	0.490	0.201	0.490	0.013	0.650	0.348
0.900	0.339	0.580	0.232	0.580	0.231	0.750	0.520
0.960	0.123	0.640	0.425	0.650	-0.043	0.830	0.568
		0.750	0.439	0.750	0.057	0.900	0.629
		0.870	0.515	0.890	0.606	0.960	0.438
		0.930	0.423	0.930	0.494		
		0.960	0.278	0.960	0.314		
CN =	0.746		0.959		0.894		0.994

Table C-2. Continued.

Flight 216, Wing sweep = 26°, Time = 9-29-18-500, MINF = 0.600, Camber = 10/18, ALPT = 11.70, BETA = -0.12, QINF = 295.4, RNPU = 3.0E+06, CNWP = 0.7044

η = 0.93		0.76		0.59		0.40	
			Upper Surface				
x/c	CP	*x/c*	CP	*x/c*	CP	*x/c*	CP
0.020	-0.900	0.000	0.368	0.000	0.485**	0.010	-2.016
0.060	-1.136	0.020	-1.491	0.020	-2.016	0.020	-2.055
0.110	-1.158	0.040	0.026	0.060	-1.415**	0.060	-2.055
0.200	-0.929	0.060	-1.647	0.090	-2.091	0.110	-1.748
0.230	-0.818	0.090	-1.907	0.110	-2.175	0.140	-1.401
0.400	-0.582	0.130	-1.614	0.130	-3.974**	0.190	-3.974**
0.490	-0.538	0.150	-2.001	0.150	-1.648	0.250	-0.806
0.590	-0.652	0.200	-1.627	0.210	-1.567	0.400	-0.645
0.630	-0.730	0.250	-0.895	0.250	-1.044	0.490	-0.520
0.700	-0.924	0.260	-0.840	0.340	-0.773	0.580	-0.548
0.750	-0.963	0.280	-0.812	0.370	-0.719	0.650	-0.558
0.810	-0.938	0.290	-0.773	0.400	-0.639	0.700	-0.548
0.840	-1.064	0.310	-0.719	0.410	0.597**	0.750	-0.575
0.900	-0.608	0.320	-0.749	0.430	-0.659	0.800	-0.588
0.960	-0.618	0.340	-0.725	0.440	-0.658	0.830	-0.493
		0.350	-0.240**	0.460	-0.636	0.900	-0.438
		0.370	-0.692	0.490	-0.624	0.960	-0.437
		0.380	-0.719	0.500	-0.623		
		0.400	-0.289	0.520	-0.652		
		0.410	-0.670	0.540	-0.624		
		0.430	-0.624	0.550	-0.622		
		0.440	-0.645	0.580	-0.634		
		0.460	-0.657	0.600	-0.661		
		0.470	-0.655	0.610	-0.635		
		0.490	-0.647	0.650	-0.826		
		0.500	-0.640	0.700	-0.739		
		0.520	-0.640	0.750	-0.778		
		0.530	-0.637	0.820	-0.671		
		0.550	-0.665	0.890	-0.414		
		0.560	-0.681	0.900	-0.399		
		0.580	-0.641	0.960	-0.332		
		0.590	-0.698				
		0.600	-0.665				
		0.640	-0.809				
		0.700	-0.892				
		0.750	0.003**				
		0.820	-0.638				
		0.870	-0.327				
		0.930	-0.294				
		0.960	-0.299				
			Lower Surface				
0.020	0.342	0.020	0.566	0.020	0.614	0.020	0.689
0.110	0.234	0.060	0.492	0.060	0.535	0.060	0.118
0.230	0.155	0.090	0.447	0.090	0.484	0.110	0.468
0.400	0.167	0.120	0.388	0.120	0.422	0.250	0.269
0.490	0.191	0.200	0.155	0.200	0.179	0.400	0.228
0.630	2.436**	0.260	0.349	0.250	0.329	0.490	0.243
0.750	0.252	0.400	0.279	0.400	0.251	0.580	0.265
0.850	0.238	0.490	0.269	0.490	0.067	0.650	0.392
0.900	0.306	0.580	0.285	0.580	0.288	0.750	0.577
0.960	0.094	0.640	0.446	0.650	-0.019	0.830	0.596
		0.750	0.449	0.750	0.068	0.900	0.649
		0.870	0.520	0.890	0.632	0.960	0.438
		0.930	0.424	0.930	0.525		
		0.960	0.288	0.960	0.324		
CN =	0.960		1.190		1.128		1.141

Table C-2. Continued.

Flight 216, Wing sweep = 26°, Time = 9-30-24-500, MINF = 0.605, Camber = 10/15, ALPT = 2.06, BETA = -0.01, QINF = 305.2, RNPU = 3.1E+06, CNWP = 0.3346

η = 0.93		0.76		0.59		0.40	
			Upper Surface				
x/c	CP	*x/c*	CP	*x/c*	CP	*x/c*	CP
0.020	0.589	0.000	-0.404	0.000	0.517**	0.010	0.382
0.060	0.101	0.020	0.587	0.020	0.530	0.020	0.214
0.110	-0.190	0.040	0.354	0.060	-0.169**	0.060	-0.297
0.200	-0.353	0.060	-0.016	0.090	-0.362	0.110	-0.684
0.230	-0.321	0.090	-0.287	0.110	-0.514	0.140	-0.595
0.400	-0.268	0.130	-0.512	0.130	-3.899**	0.190	-3.899**
0.490	-0.274	0.150	-0.608	0.150	-0.500	0.250	-0.421
0.590	-0.383	0.200	-0.481	0.210	-0.478	0.400	-0.413
0.630	-0.439	0.250	-0.353	0.250	-0.424	0.490	-0.383
0.700	-0.630	0.260	-0.368	0.340	-0.430	0.580	-0.446
0.750	-0.843	0.280	-0.374	0.370	-0.428	0.650	-0.607
0.810	-0.778	0.290	-0.374	0.400	-0.387	0.700	-0.610
0.840	-0.844	0.310	-0.357	0.410	0.524**	0.750	-0.873
0.900	-0.255	0.320	-0.378	0.430	-0.424	0.800	-0.984
0.960	-0.221	0.340	-0.374	0.440	-0.443	0.830	-0.838
		0.350	-0.176**	0.460	-0.432	0.900	-0.402
		0.370	-0.374	0.490	-0.425	0.960	-0.430
		0.380	-0.392	0.500	-0.455		
		0.400	-0.325	0.520	-0.476		
		0.410	-0.375	0.540	-0.467		
		0.430	-0.362	0.550	-0.459		
		0.440	-0.368	0.580	-0.466		
		0.460	-0.370	0.600	-0.525		
		0.470	-0.392	0.610	-0.539		
		0.490	-0.410	0.650	-0.716		
		0.500	-0.414	0.700	-0.695		
		0.520	-0.402	0.750	-0.758		
		0.530	-0.427	0.820	-0.587		
		0.550	-0.459	0.890	-0.353		
		0.560	-0.477	0.900	-0.372		
		0.580	-0.422	0.960	-0.342		
		0.590	-0.507				
		0.600	-0.488				
		0.640	-0.677				
		0.700	-0.769				
		0.750	-0.107**				
		0.820	-0.598				
		0.870	-0.351				
		0.930	-0.333				
		0.960	-0.357				
			Lower Surface				
0.020	-1.182	0.020	-0.935	0.020	-0.847	0.020	-1.021
0.110	-0.184	0.060	-0.317	0.060	-0.159	0.060	0.004
0.230	-0.057	0.090	-0.144	0.090	-0.095	0.110	-0.180
0.400	0.048	0.120	-0.050	0.120	-0.080	0.250	-0.121
0.490	0.089	0.200	-0.057	0.200	-0.036	0.400	-0.044
0.630	2.303**	0.260	0.029	0.250	-0.008	0.490	0.008
0.750	0.198	0.400	0.063	0.400	0.015	0.580	0.087
0.850	0.196	0.490	0.102	0.490	-0.074	0.650	0.297
0.900	0.282	0.580	0.162	0.580	0.147	0.750	0.462
0.960	0.157	0.640	0.325	0.650	-0.100	0.830	0.508
		0.750	0.308	0.750	-0.002	0.900	0.559
		0.870	0.339	0.890	0.547	0.960	0.412
		0.930	0.261	0.930	0.463		
		0.960	0.143	0.960	0.313		
CN =	0.421		0.527		0.519		0.623

Table C-2. Continued.

Flight 216, Wing sweep = 26°, Time = 9-30-42-000, MINF = 0.608, Camber = 10/16, ALPT = 8.12, BETA = -0.30, QINF = 305.8, RNPU = 3.1E+06, CNWP = 0.5323

η = 0.93		0.76		0.59		0.40	
			Upper Surface				
x/c	CP	x/c	CP	x/c	CP	x/c	CP
0.020	-0.074	0.000	0.803	0.000	0.852**	0.010	-0.835
0.060	-0.517	0.020	-0.382	0.020	-0.550	0.020	-0.815
0.110	-0.779	0.040	-0.130	0.060	-0.887**	0.060	-1.507
0.200	-0.693	0.060	-0.918	0.090	-1.248	0.110	-1.571
0.230	-0.620	0.090	-1.120	0.110	-1.473	0.140	-1.322
0.400	-0.434	0.130	-1.423	0.130	-3.866**	0.190	-3.866**
0.490	-0.414	0.150	-1.704	0.150	-1.211	0.250	-0.710
0.590	-0.524	0.200	-1.032	0.210	-0.942	0.400	-0.590
0.630	-0.587	0.250	-0.727	0.250	-0.767	0.490	-0.531
0.700	-0.784	0.260	-0.701	0.340	-0.684	0.580	-0.575
0.750	-1.001	0.280	-0.686	0.370	-0.673	0.650	-0.715
0.810	-0.961	0.290	-0.661	0.400	-0.600	0.700	-0.697
0.840	-1.066	0.310	-0.625	0.410	0.549**	0.750	-0.860
0.900	-0.434	0.320	-0.649	0.430	-0.648	0.800	-0.743
0.960	-0.452	0.340	-0.629	0.440	-0.641	0.830	-0.666
		0.350	-0.226**	0.460	-0.616	0.900	-0.373
		0.370	-0.595	0.490	-0.599	0.960	-0.359
		0.380	-0.616	0.500	-0.611		
		0.400	-0.303	0.520	-0.636		
		0.410	-0.570	0.540	-0.619		
		0.430	-0.546	0.550	-0.596		
		0.440	-0.541	0.580	-0.600		
		0.460	-0.554	0.600	-0.647		
		0.470	-0.574	0.610	-0.656		
		0.490	-0.557	0.650	-0.817		
		0.500	-0.567	0.700	-0.769		
		0.520	-0.529	0.750	-0.818		
		0.530	-0.564	0.820	-0.524		
		0.550	-0.591	0.890	-0.444		
		0.560	-0.598	0.900	-0.437		
		0.580	-0.564	0.960	-0.428		
		0.590	-0.622				
		0.600	-0.587				
		0.640	-0.757				
		0.700	-0.828				
		0.750	-0.035**				
		0.820	-0.536				
		0.870	-0.311				
		0.930	-0.343				
		0.960	-0.359				
			Lower Surface				
0.020	0.006	0.020	0.175	0.020	0.216	0.020	0.398
0.110	0.092	0.060	0.294	0.060	0.331	0.060	0.058
0.230	0.082	0.090	0.261	0.090	0.302	0.110	0.267
0.400	0.102	0.120	0.248	0.120	0.251	0.250	0.127
0.490	0.132	0.200	0.076	0.200	0.104	0.400	0.121
0.630	2.325**	0.260	0.228	0.250	0.197	0.490	0.150
0.750	0.218	0.400	0.195	0.400	0.176	0.580	0.190
0.850	0.219	0.490	0.197	0.490	0.016	0.650	0.351
0.900	0.296	0.580	0.227	0.580	0.236	0.750	0.534
0.960	0.100	0.640	0.408	0.650	-0.046	0.830	0.578
		0.750	0.378	0.750	0.052	0.900	0.630
		0.870	0.419	0.890	0.618	0.960	0.436
		0.930	0.322	0.930	0.509		
		0.960	0.179	0.960	0.347		
CN =	0.734		0.932		0.901		1.009

Table C-2. Continued.

Flight 216, Wing sweep = 26°, Time = 9-30-47-500, MINF = 0.591, Camber = 10/15, ALPT = 12.30, BETA = -0.07, QINF = 288.2, RNPU = 3.0E+06, CNWP = 0.7297

η = 0.93		0.76		0.59		0.40	
			Upper Surface				
x/c	CP	*x/c*	CP	*x/c*	CP	*x/c*	CP
0.020	-0.968	0.000	0.272	0.000	0.442**	0.010	-2.158
0.060	-1.203	0.020	-1.533	0.020	-2.179	0.020	-2.213
0.110	-1.288	0.040	0.026	0.060	-1.390**	0.060	-2.125
0.200	-0.959	0.060	-1.708	0.090	-2.174	0.110	-1.684
0.230	-0.814	0.090	-1.977	0.110	-2.276	0.140	-1.326
0.400	-0.577	0.130	-1.658	0.130	-4.092**	0.190	-4.092**
0.490	-0.537	0.150	-2.055	0.150	-1.685	0.250	-0.801
0.590	-0.656	0.200	-1.613	0.210	-1.553	0.400	-0.630
0.630	-0.716	0.250	-0.895	0.250	-1.007	0.490	-0.548
0.700	-0.894	0.260	-0.837	0.340	-0.750	0.580	-0.549
0.750	-1.072	0.280	-0.824	0.370	-0.716	0.650	-0.555
0.810	-1.047	0.290	-0.764	0.400	-0.643	0.700	-0.534
0.840	-1.179	0.310	-0.746	0.410	0.593**	0.750	-0.594
0.900	-0.531	0.320	-0.749	0.430	-0.649	0.800	-0.582
0.960	-0.546	0.340	-0.726	0.440	-0.647	0.830	-0.463
		0.350	-0.234**	0.460	-0.622	0.900	-0.463
		0.370	-0.687	0.490	-0.597	0.960	-0.435
		0.380	-0.718	0.500	-0.628		
		0.400	-0.312	0.520	-0.637		
		0.410	-0.661	0.540	-0.623		
		0.430	-0.647	0.550	-0.618		
		0.440	-0.615	0.580	-0.582		
		0.460	-0.653	0.600	-0.632		
		0.470	-0.648	0.610	-0.634		
		0.490	-0.650	0.650	-0.803		
		0.500	-0.627	0.700	-0.712		
		0.520	-0.604	0.750	-0.760		
		0.530	-0.620	0.820	-0.632		
		0.550	-0.657	0.890	-0.397		
		0.560	-0.676	0.900	-0.370		
		0.580	-0.641	0.960	-0.327		
		0.590	-0.683				
		0.600	-0.645				
		0.640	-0.783				
		0.700	-0.862				
		0.750	-0.016**				
		0.820	-0.525				
		0.870	-0.267				
		0.930	-0.263				
		0.960	-0.231				
			Lower Surface				
0.020	0.364	0.020	0.575	0.020	0.610	0.020	0.693
0.110	0.231	0.060	0.523	0.060	0.557	0.060	0.116
0.230	0.139	0.090	0.466	0.090	0.506	0.110	0.481
0.400	0.159	0.120	0.401	0.120	0.422	0.250	0.270
0.490	0.183	0.200	0.140	0.200	0.179	0.400	0.233
0.630	2.477**	0.260	0.357	0.250	0.340	0.490	0.238
0.750	0.210	0.400	0.285	0.400	0.273	0.580	0.262
0.850	0.200	0.490	0.272	0.490	0.057	0.650	0.405
0.900	0.273	0.580	0.265	0.580	0.298	0.750	0.587
0.960	0.056	0.640	0.433	0.650	-0.027	0.830	0.591
		0.750	0.395	0.750	0.095	0.900	0.661
		0.870	0.423	0.890	0.636	0.960	0.451
		0.930	0.355	0.930	0.526		
		0.960	0.218	0.960	0.344		
CN =	0.959		1.155		1.131		1.145

Table C-2. Continued.

Flight 216, Wing sweep = 26°, Time = 9-31-32-000, MINF = 0.603, Camber = 10/12, ALPT = 2.09, BETA = 0.69, QINF = 303.3, RNPU = 3.1E+06, CNWP = 0.2984

η = 0.93		0.76		0.59		0.40	
			Upper Surface				
x/c	CP	x/c	CP	x/c	CP	x/c	CP
0.020	0.594	0.000	-0.407	0.000	0.444**	0.010	0.405
0.060	0.083	0.020	0.609	0.020	0.549	0.020	0.250
0.110	-0.248	0.040	0.363	0.060	-0.070**	0.060	-0.314
0.200	-0.328	0.060	-0.017	0.090	-0.344	0.110	-0.670
0.230	-0.314	0.090	-0.272	0.110	-0.532	0.140	-0.613
0.400	-0.262	0.130	-0.495	0.130	-3.924**	0.190	-3.924**
0.490	-0.258	0.150	-0.605	0.150	-0.520	0.250	-0.424
0.590	-0.363	0.200	-0.479	0.210	-0.458	0.400	-0.394
0.630	-0.412	0.250	-0.356	0.250	-0.405	0.490	-0.386
0.700	-0.568	0.260	-0.378	0.340	-0.418	0.580	-0.439
0.750	-0.780	0.280	-0.368	0.370	-0.431	0.650	-0.625
0.810	-0.706	0.290	-0.368	0.400	-0.376	0.700	-0.604
0.840	-0.755	0.310	-0.353	0.410	0.527**	0.750	-0.872
0.900	-0.242	0.320	-0.362	0.430	-0.426	0.800	-0.977
0.960	-0.100	0.340	-0.366	0.440	-0.436	0.830	-0.798
		0.350	-0.178**	0.460	-0.424	0.900	-0.382
		0.370	-0.355	0.490	-0.406	0.960	-0.425
		0.380	-0.372	0.500	-0.449		
		0.400	-0.324	0.520	-0.480		
		0.410	-0.368	0.540	-0.450		
		0.430	-0.339	0.550	-0.450		
		0.440	-0.358	0.580	-0.452		
		0.460	-0.359	0.600	-0.517		
		0.470	-0.409	0.610	-0.530		
		0.490	-0.406	0.650	-0.676		
		0.500	-0.412	0.700	-0.678		
		0.520	-0.389	0.750	-0.752		
		0.530	-0.420	0.820	-0.608		
		0.550	-0.462	0.890	-0.328		
		0.560	-0.468	0.900	-0.343		
		0.580	-0.418	0.960	-0.313		
		0.590	-0.498				
		0.600	-0.477				
		0.640	-0.659				
		0.700	-0.753				
		0.750	-0.151**				
		0.820	-0.558				
		0.870	-0.300				
		0.930	-0.313				
		0.960	-0.294				
			Lower Surface				
0.020	-1.092	0.020	-0.958	0.020	-0.891	0.020	-1.040
0.110	-0.202	0.060	-0.342	0.060	-0.175	0.060	0.007
0.230	-0.058	0.090	-0.172	0.090	-0.096	0.110	-0.196
0.400	0.026	0.120	-0.058	0.120	-0.090	0.250	-0.122
0.490	0.078	0.200	-0.064	0.200	-0.030	0.400	-0.059
0.630	2.317**	0.260	0.029	0.250	-0.023	0.490	0.022
0.750	0.150	0.400	0.056	0.400	0.020	0.580	0.101
0.850	0.166	0.490	0.091	0.490	-0.082	0.650	0.285
0.900	0.243	0.580	0.144	0.580	0.148	0.750	0.464
0.960	0.157	0.640	0.315	0.650	-0.136	0.830	0.525
		0.750	0.252	0.750	-0.003	0.900	0.583
		0.870	0.231	0.890	0.547	0.960	0.408
		0.930	0.194	0.930	0.466		
		0.960	0.089	0.960	0.338		
CN =	0.376		0.482		0.503		0.619

Table C-2. Continued.

Flight 216, Wing sweep = 26°, Time = 9-31-43-000, MINF = 0.607, Camber = 10/12, ALPT = 8.09, BETA = -0.41, QINF = 304.8, RNPU = 3.1E+06, CNWP = 0.5067

η = 0.93		0.76		0.59		0.40	
			Upper Surface				
x/c	CP	*x/c*	CP	*x/c*	CP	*x/c*	CP
0.020	-0.081	0.000	0.793	0.000	0.849**	0.010	-0.816
0.060	-0.527	0.020	-0.381	0.020	-0.566	0.020	-0.816
0.110	-0.780	0.040	-0.097	0.060	-0.942**	0.060	-1.490
0.200	-0.694	0.060	-0.934	0.090	-1.240	0.110	-1.575
0.230	-0.611	0.090	-1.122	0.110	-1.485	0.140	-1.325
0.400	-0.419	0.130	-1.420	0.130	-3.877**	0.190	-3.877**
0.490	-0.396	0.150	-1.684	0.150	-1.238	0.250	-0.683
0.590	-0.490	0.200	-1.034	0.210	-0.952	0.400	-0.584
0.630	-0.546	0.250	-0.722	0.250	-0.761	0.490	-0.531
0.700	-0.704	0.260	-0.702	0.340	-0.685	0.580	-0.565
0.750	-0.938	0.280	-0.687	0.370	-0.681	0.650	-0.705
0.810	-0.878	0.290	-0.653	0.400	-0.593	0.700	-0.687
0.840	-0.977	0.310	-0.616	0.410	0.552**	0.750	-0.840
0.900	-0.347	0.320	-0.636	0.430	-0.648	0.800	-0.745
0.960	-0.284	0.340	-0.616	0.440	-0.635	0.830	-0.658
		0.350	-0.220**	0.460	-0.605	0.900	-0.364
		0.370	-0.588	0.490	-0.577	0.960	-0.342
		0.380	-0.603	0.500	-0.612		
		0.400	-0.305	0.520	-0.636		
		0.410	-0.564	0.540	-0.606		
		0.430	-0.534	0.550	-0.585		
		0.440	-0.530	0.580	-0.583		
		0.460	-0.549	0.600	-0.636		
		0.470	-0.568	0.610	-0.643		
		0.490	-0.546	0.650	-0.793		
		0.500	-0.557	0.700	-0.763		
		0.520	-0.530	0.750	-0.801		
		0.530	-0.546	0.820	-0.495		
		0.550	-0.556	0.890	-0.380		
		0.560	-0.598	0.900	-0.384		
		0.580	-0.544	0.960	-0.359		
		0.590	-0.605				
		0.600	-0.578				
		0.640	-0.723				
		0.700	-0.793				
		0.750	-0.094**				
		0.820	-0.395				
		0.870	-0.274				
		0.930	-0.292				
		0.960	-0.279				
			Lower Surface				
0.020	0.008	0.020	0.174	0.020	0.234	0.020	0.413
0.110	0.090	0.060	0.296	0.060	0.334	0.060	0.046
0.230	0.080	0.090	0.258	0.090	0.307	0.110	0.279
0.400	0.067	0.120	0.250	0.120	0.253	0.250	0.135
0.490	0.112	0.200	0.064	0.200	0.106	0.400	0.112
0.630	2.334**	0.260	0.227	0.250	0.206	0.490	0.138
0.750	0.160	0.400	0.186	0.400	0.159	0.580	0.202
0.850	0.165	0.490	0.184	0.490	-0.025	0.650	0.340
0.900	0.253	0.580	0.189	0.580	0.232	0.750	0.528
0.960	0.098	0.640	0.364	0.650	-0.101	0.830	0.567
		0.750	0.303	0.750	0.040	0.900	0.634
		0.870	0.332	0.890	0.601	0.960	0.439
		0.930	0.220	0.930	0.491		
		0.960	0.098	0.960	0.334		
CN =	0.670		0.867		0.874		0.997

Table C-2. Continued.

Flight 216, Wing sweep = 26°, Time = 9-31-47-500, MINF = 0.594, Camber = 10/12, ALPT = 12.00, BETA = -0.27, QINF = 290.5, RNPU = 3.0E+06, CNWP = 0.7488

η = 0.93		0.76		0.59		0.40	
			Upper Surface				
x/c	CP	*x/c*	CP	*x/c*	CP	*x/c*	CP
0.020	-0.918	0.000	0.341	0.000	0.438**	0.010	-2.062
0.060	-1.118	0.020	-1.528	0.020	-2.103	0.020	-2.123
0.110	-1.201	0.040	0.004	0.060	-1.370**	0.060	-2.101
0.200	-0.930	0.060	-1.670	0.090	-2.127	0.110	-1.688
0.230	-0.786	0.090	-1.933	0.110	-2.229	0.140	-1.326
0.400	-0.572	0.130	-1.638	0.130	-4.052**	0.190	-4.052**
0.490	-0.513	0.150	-2.031	0.150	-1.685	0.250	-0.802
0.590	-0.611	0.200	-1.566	0.210	-1.519	0.400	-0.617
0.630	-0.693	0.250	-0.871	0.250	-0.932	0.490	-0.512
0.700	-0.847	0.260	-0.803	0.340	-0.735	0.580	-0.505
0.750	-1.039	0.280	-0.792	0.370	-0.686	0.650	-0.558
0.810	-1.017	0.290	-0.765	0.400	-0.630	0.700	-0.537
0.840	-1.116	0.310	-0.723	0.410	0.596**	0.750	-0.559
0.900	-0.443	0.320	-0.761	0.430	-0.651	0.800	-0.577
0.960	-0.413	0.340	-0.721	0.440	-0.627	0.830	-0.457
		0.350	-0.229**	0.460	-0.613	0.900	-0.504
		0.370	-0.681	0.490	-0.607	0.960	-0.431
		0.380	-0.725	0.500	-0.596		
		0.400	-0.294	0.520	-0.622		
		0.410	-0.649	0.540	-0.618		
		0.430	-0.623	0.550	-0.593		
		0.440	-0.608	0.580	-0.602		
		0.460	-0.628	0.600	-0.634		
		0.470	-0.659	0.610	-0.629		
		0.490	-0.629	0.650	-0.817		
		0.500	-0.623	0.700	-0.702		
		0.520	-0.574	0.750	-0.788		
		0.530	-0.612	0.820	-0.668		
		0.550	-0.646	0.890	-0.387		
		0.560	-0.653	0.900	-0.379		
		0.580	-0.608	0.960	-0.331		
		0.590	-0.676				
		0.600	-0.617				
		0.640	-0.770				
		0.700	-0.843				
		0.750	-0.057**				
		0.820	-0.330				
		0.870	-0.216				
		0.930	-0.249				
		0.960	-0.297				
			Lower Surface				
0.020	0.343	0.020	0.564	0.020	0.582	0.020	0.695
0.110	0.223	0.060	0.489	0.060	0.546	0.060	0.108
0.230	0.146	0.090	0.434	0.090	0.488	0.110	0.485
0.400	0.120	0.120	0.361	0.120	0.418	0.250	0.269
0.490	0.133	0.200	0.128	0.200	0.171	0.400	0.231
0.630	2.465**	0.260	0.329	0.250	0.330	0.490	0.243
0.750	0.158	0.400	0.264	0.400	0.258	0.580	0.268
0.850	0.143	0.490	0.247	0.490	0.034	0.650	0.387
0.900	0.227	0.580	0.251	0.580	0.289	0.750	0.575
0.960	0.054	0.640	0.403	0.650	-0.060	0.830	0.594
		0.750	0.317	0.750	0.102	0.900	0.649
		0.870	0.313	0.890	0.631	0.960	0.440
		0.930	0.228	0.930	0.522		
		0.960	0.137	0.960	0.330		
CN =	0.886		1.076		1.111		1.131

Table C-2. Continued.

Flight 216, Wing sweep = 26°, Time = 9-32-35-000, MINF = 0.606, Camber = 10/9, ALPT = 1.99, BETA = 0.25, QINF = 306.3, RNPU = 3.1E+06, CNWP = 0.3043

η = 0.93		0.76		0.59		0.40	
			Upper Surface				
x/c	CP	*x/c*	CP	*x/c*	CP	*x/c*	CP
0.020	0.602	0.000	-0.425	0.000	0.480**	0.010	0.427
0.060	0.097	0.020	0.628	0.020	0.565	0.020	0.260
0.110	-0.206	0.040	0.379	0.060	-0.140**	0.060	-0.284
0.200	-0.334	0.060	0.005	0.090	-0.325	0.110	-0.657
0.230	-0.278	0.090	-0.255	0.110	-0.495	0.140	-0.584
0.400	-0.239	0.130	-0.480	0.130	-3.895**	0.190	-3.895**
0.490	-0.246	0.150	-0.581	0.150	-0.501	0.250	-0.401
0.590	-0.331	0.200	-0.463	0.210	-0.453	0.400	-0.392
0.630	-0.368	0.250	-0.346	0.250	-0.402	0.490	-0.367
0.700	-0.494	0.260	-0.355	0.340	-0.408	0.580	-0.429
0.750	-0.660	0.280	-0.350	0.370	-0.414	0.650	-0.613
0.810	-0.588	0.290	-0.350	0.400	-0.366	0.700	-0.582
0.840	-0.633	0.310	-0.335	0.410	0.514**	0.750	-0.851
0.900	-0.281	0.320	-0.358	0.430	-0.417	0.800	-0.968
0.960	-0.083	0.340	-0.350	0.440	-0.416	0.830	-0.803
		0.350	-0.165**	0.460	-0.414	0.900	-0.395
		0.370	-0.349	0.490	-0.440	0.960	-0.415
		0.380	-0.368	0.500	-0.420		
		0.400	-0.329	0.520	-0.461		
		0.410	-0.353	0.540	-0.454		
		0.430	-0.333	0.550	-0.440		
		0.440	-0.340	0.580	-0.442		
		0.460	-0.352	0.600	-0.506		
		0.470	-0.381	0.610	-0.519		
		0.490	-0.384	0.650	-0.692		
		0.500	-0.397	0.700	-0.677		
		0.520	-0.372	0.750	-0.739		
		0.530	-0.400	0.820	-0.568		
		0.550	-0.426	0.890	-0.315		
		0.560	-0.452	0.900	-0.339		
		0.580	-0.416	0.960	-0.297		
		0.590	-0.474				
		0.600	-0.457				
		0.640	-0.638				
		0.700	-0.729				
		0.750	-0.158**				
		0.820	-0.576				
		0.870	-0.284				
		0.930	-0.315				
		0.960	-0.339				
			Lower Surface				
0.020	-1.001	0.020	-0.977	0.020	-0.915	0.020	-1.097
0.110	-0.233	0.060	-0.381	0.060	-0.199	0.060	0.009
0.230	-0.059	0.090	-0.193	0.090	-0.098	0.110	-0.208
0.400	0.031	0.120	-0.080	0.120	-0.091	0.250	-0.122
0.490	0.065	0.200	-0.058	0.200	-0.037	0.400	-0.053
0.630	2.287**	0.260	0.020	0.250	-0.024	0.490	0.006
0.750	0.124	0.400	0.050	0.400	0.016	0.580	0.092
0.850	0.144	0.490	0.081	0.490	-0.104	0.650	0.295
0.900	0.223	0.580	0.137	0.580	0.152	0.750	0.470
0.960	0.158	0.640	0.282	0.650	-0.164	0.830	0.516
		0.750	0.207	0.750	0.007	0.900	0.575
		0.870	0.208	0.890	0.548	0.960	0.422
		0.930	0.187	0.930	0.467		
		0.960	0.094	0.960	0.313		
CN =	0.326		0.455		0.485		0.606

Table C-2. Continued.

Flight 216, Wing sweep = 26°, Time = 9-32-47-000, MINF = 0.603, Camber = 10/9, ALPT = 7.92, BETA = -0.41, QINF = 300.2, RNPU = 3.1E+06, CNWP = 0.4942

η = 0.93		0.76		0.59		0.40	
			Upper Surface				
x/c	CP	*x/c*	CP	*x/c*	CP	*x/c*	CP
0.020	-0.041	0.000	0.806	0.000	0.835**	0.010	-0.772
0.060	-0.504	0.020	-0.337	0.020	-0.493	0.020	-0.730
0.110	-0.764	0.040	-0.435	0.060	-0.908**	0.060	-1.373
0.200	-0.673	0.060	-0.893	0.090	-1.213	0.110	-1.546
0.230	-0.590	0.090	-1.094	0.110	-1.461	0.140	-1.218
0.400	-0.409	0.130	-1.389	0.130	-3.928**	0.190	-3.928**
0.490	-0.382	0.150	-1.389	0.150	-1.104	0.250	-0.699
0.590	-0.458	0.200	-1.016	0.210	-0.941	0.400	-0.585
0.630	-0.503	0.250	-0.714	0.250	-0.750	0.490	-0.527
0.700	-0.628	0.260	-0.698	0.340	-0.672	0.580	-0.559
0.750	-0.807	0.280	-0.669	0.370	-0.659	0.650	-0.702
0.810	-0.748	0.290	-0.643	0.400	-0.579	0.700	-0.694
0.840	-0.815	0.310	-0.606	0.410	0.569**	0.750	-0.852
0.900	-0.442	0.320	-0.621	0.430	-0.620	0.800	-0.748
0.960	-0.231	0.340	-0.605	0.440	-0.616	0.830	-0.629
		0.350	-0.219**	0.460	-0.593	0.900	-0.367
		0.370	-0.574	0.490	-0.577	0.960	-0.354
		0.380	-0.596	0.500	-0.590		
		0.400	-0.291	0.520	-0.619		
		0.410	-0.553	0.540	-0.594		
		0.430	-0.526	0.550	-0.575		
		0.440	-0.516	0.580	-0.563		
		0.460	-0.539	0.600	-0.628		
		0.470	-0.563	0.610	-0.632		
		0.490	-0.537	0.650	-0.757		
		0.500	-0.544	0.700	-0.741		
		0.520	-0.513	0.750	-0.794		
		0.530	-0.533	0.820	-0.513		
		0.550	-0.561	0.890	-0.352		
		0.560	-0.577	0.900	-0.354		
		0.580	-0.532	0.960	-0.339		
		0.590	-0.585				
		0.600	-0.564				
		0.640	-0.707				
		0.700	-0.779				
		0.750	-0.109**				
		0.820	-0.389				
		0.870	-0.299				
		0.930	-0.265				
		0.960	-0.286				
			Lower Surface				
0.020	-0.038	0.020	0.135	0.020	0.208	0.020	0.388
0.110	0.079	0.060	0.283	0.060	0.320	0.060	0.054
0.230	0.072	0.090	0.250	0.090	0.294	0.110	0.257
0.400	0.073	0.120	0.240	0.120	0.234	0.250	0.128
0.490	0.093	0.200	0.069	0.200	0.095	0.400	0.122
0.630	2.378**	0.260	0.217	0.250	0.196	0.490	0.148
0.750	0.114	0.400	0.171	0.400	0.174	0.580	0.189
0.850	0.123	0.490	0.165	0.490	-0.032	0.650	0.346
0.900	0.216	0.580	0.181	0.580	0.222	0.750	0.534
0.960	0.102	0.640	0.351	0.650	-0.108	0.830	0.575
		0.750	0.248	0.750	0.048	0.900	0.631
		0.870	0.271	0.890	0.604	0.960	0.440
		0.930	0.232	0.930	0.492		
		0.960	0.130	0.960	0.325		
CN =	0.616		0.833		0.853		0.983

Table C-2. Continued.

Flight 216, Wing sweep = 26°, Time = 9-32-51-500, MINF = 0.590, Camber = 10/9, ALPT = 11.92, BETA = -0.27, QINF = 286.9, RNPU = 3.0E+06, CNWP = 0.7017

η = 0.93		0.76		0.59		0.40	
			Upper Surface				
x/c	CP	*x/c*	CP	*x/c*	CP	*x/c*	CP
0.020	-0.919	0.000	0.345	0.000	0.445**	0.010	-2.035
0.060	-1.136	0.020	-1.561	0.020	-2.076	0.020	-2.097
0.110	-1.218	0.040	0.006	0.060	-1.392**	0.060	-2.118
0.200	-0.942	0.060	-1.704	0.090	-2.134	0.110	-1.743
0.230	-0.810	0.090	-1.961	0.110	-2.256	0.140	-1.356
0.400	-0.562	0.130	-1.672	0.130	-4.101**	0.190	-4.101**
0.490	-0.514	0.150	-2.070	0.150	-1.713	0.250	-0.840
0.590	-0.592	0.200	-1.569	0.210	-1.571	0.400	-0.646
0.630	-0.652	0.250	-0.867	0.250	-0.972	0.490	-0.551
0.700	-0.770	0.260	-0.826	0.340	-0.742	0.580	-0.568
0.750	-0.943	0.280	-0.807	0.370	-0.732	0.650	-0.632
0.810	-0.886	0.290	-0.770	0.400	-0.636	0.700	-0.600
0.840	-0.990	0.310	-0.736	0.410	0.604**	0.750	-0.678
0.900	-0.499	0.320	-0.759	0.430	-0.672	0.800	-0.664
0.960	-0.306	0.340	-0.729	0.440	-0.660	0.830	-0.476
		0.350	-0.251**	0.460	-0.640	0.900	-0.448
		0.370	-0.696	0.490	-0.612	0.960	-0.390
		0.380	-0.718	0.500	-0.627		
		0.400	-0.300	0.520	-0.661		
		0.410	-0.658	0.540	-0.640		
		0.430	-0.632	0.550	-0.608		
		0.440	-0.616	0.580	-0.605		
		0.460	-0.637	0.600	-0.655		
		0.470	-0.652	0.610	-0.637		
		0.490	-0.630	0.650	-0.793		
		0.500	-0.633	0.700	-0.728		
		0.520	-0.603	0.750	-0.780		
		0.530	-0.615	0.820	-0.603		
		0.550	-0.624	0.890	-0.355		
		0.560	-0.661	0.900	-0.354		
		0.580	-0.608	0.960	-0.305		
		0.590	-0.679				
		0.600	-0.628				
		0.640	-0.759				
		0.700	-0.822				
		0.750	-0.086**				
		0.820	-0.266				
		0.870	-0.175				
		0.930	-0.273				
		0.960	-0.230				
			Lower Surface				
0.020	0.338	0.020	0.554	0.020	0.590	0.020	0.697
0.110	0.219	0.060	0.500	0.060	0.539	0.060	0.096
0.230	0.130	0.090	0.444	0.090	0.488	0.110	0.498
0.400	0.127	0.120	0.378	0.120	0.409	0.250	0.272
0.490	0.128	0.200	0.127	0.200	0.152	0.400	0.228
0.630	2.497**	0.260	0.334	0.250	0.328	0.490	0.240
0.750	0.106	0.400	0.254	0.400	0.258	0.580	0.263
0.850	0.104	0.490	0.232	0.490	0.013	0.650	0.389
0.900	0.183	0.580	0.228	0.580	0.286	0.750	0.573
0.960	0.063	0.640	0.379	0.650	-0.097	0.830	0.601
		0.750	0.255	0.750	0.075	0.900	0.655
		0.870	0.265	0.890	0.625	0.960	0.444
		0.930	0.236	0.930	0.523		
		0.960	0.156	0.960	0.321		
CN =	0.844		1.057		1.103		1.166

Table C-2. Continued.

Flight 216, Wing sweep = 26°, Time = 9-33-28-000, MINF = 0.599, Camber = 10/6, ALPT = 2.03, BETA = 0.02, QINF = 299.5, RNPU = 3.1E+06, CNWP = 0.3061

η = 0.93		0.76		0.59		0.40	
			Upper Surface				
x/c	CP	x/c	CP	x/c	CP	x/c	CP
0.020	0.588	0.000	-0.393	0.000	0.460**	0.010	0.399
0.060	0.085	0.020	0.589	0.020	0.542	0.020	0.229
0.110	-0.229	0.040	0.356	0.060	-0.100**	0.060	-0.307
0.200	-0.324	0.060	-0.021	0.090	-0.323	0.110	-0.668
0.230	-0.299	0.090	-0.273	0.110	-0.529	0.140	-0.602
0.400	-0.233	0.130	-0.499	0.130	-3.978**	0.190	-3.978**
0.490	-0.233	0.150	-0.594	0.150	-0.525	0.250	-0.405
0.590	-0.288	0.200	-0.469	0.210	-0.468	0.400	-0.397
0.630	-0.311	0.250	-0.350	0.250	-0.400	0.490	-0.385
0.700	-0.395	0.260	-0.365	0.340	-0.398	0.580	-0.424
0.750	-0.480	0.280	-0.368	0.370	-0.419	0.650	-0.612
0.810	-0.417	0.290	-0.345	0.400	-0.363	0.700	-0.591
0.840	-0.457	0.310	-0.335	0.410	0.529**	0.750	-0.858
0.900	-0.255	0.320	-0.357	0.430	-0.407	0.800	-0.979
0.960	-0.080	0.340	-0.347	0.440	-0.435	0.830	-0.835
		0.350	-0.173**	0.460	-0.408	0.900	-0.381
		0.370	-0.360	0.490	-0.400	0.960	-0.404
		0.380	-0.362	0.500	-0.449		
		0.400	-0.332	0.520	-0.473		
		0.410	-0.350	0.540	-0.446		
		0.430	-0.336	0.550	-0.433		
		0.440	-0.337	0.580	-0.448		
		0.460	-0.343	0.600	-0.501		
		0.470	-0.378	0.610	-0.513		
		0.490	-0.377	0.650	-0.653		
		0.500	-0.385	0.700	-0.666		
		0.520	-0.345	0.750	-0.737		
		0.530	-0.390	0.820	-0.593		
		0.550	-0.422	0.890	-0.314		
		0.560	-0.439	0.900	-0.316		
		0.580	-0.401	0.960	-0.289		
		0.590	-0.467				
		0.600	-0.443				
		0.640	-0.618				
		0.700	-0.708				
		0.750	-0.172**				
		0.820	-0.623				
		0.870	-0.261				
		0.930	-0.281				
		0.960	-0.287				
			Lower Surface				
0.020	-1.154	0.020	-0.953	0.020	-0.760	0.020	-0.979
0.110	-0.187	0.060	-0.302	0.060	-0.141	0.060	0.014
0.230	-0.048	0.090	-0.140	0.090	-0.077	0.110	-0.188
0.400	0.014	0.120	-0.034	0.120	-0.072	0.250	-0.107
0.490	0.045	0.200	-0.062	0.200	-0.020	0.400	-0.049
0.630	2.343**	0.260	0.033	0.250	-0.013	0.490	0.018
0.750	0.081	0.400	0.052	0.400	0.020	0.580	0.098
0.850	0.098	0.490	0.079	0.490	-0.102	0.650	0.295
0.900	0.173	0.580	0.121	0.580	0.152	0.750	0.476
0.960	0.128	0.640	0.277	0.650	-0.167	0.830	0.519
		0.750	0.166	0.750	0.011	0.900	0.580
		0.870	0.143	0.890	0.557	0.960	0.424
		0.930	0.166	0.930	0.460		
		0.960	0.089	0.960	0.353		
CN =	0.275		0.450		0.495		0.620

Table C-2. Continued.

Flight 216, Wing sweep = 26°, Time = 9-33-39-500, MINF = 0.610, Camber = 10/6, ALPT = 8.24, BETA = -0.10, QINF = 309.6, RNPU = 3.1E+06, CNWP = 0.4955

η = 0.93		0.76		0.59		0.40	
			Upper Surface				
x/c	CP	*x/c*	CP	*x/c*	CP	*x/c*	CP
0.020	-0.093	0.000	0.807	0.000	0.803**	0.010	-0.836
0.060	-0.559	0.020	-0.443	0.020	-0.547	0.020	-0.816
0.110	-0.770	0.040	-0.013	0.060	-0.910**	0.060	-1.520
0.200	-0.708	0.060	-0.963	0.090	-1.259	0.110	-1.592
0.230	-0.614	0.090	-1.142	0.110	-1.492	0.140	-1.386
0.400	-0.411	0.130	-1.461	0.130	-3.844**	0.190	-3.844**
0.490	-0.381	0.150	-1.750	0.150	-1.305	0.250	-0.726
0.590	-0.436	0.200	-1.042	0.210	-0.951	0.400	-0.581
0.630	-0.465	0.250	-0.736	0.250	-0.769	0.490	-0.536
0.700	-0.547	0.260	-0.710	0.340	-0.687	0.580	-0.570
0.750	-0.654	0.280	-0.689	0.370	-0.676	0.650	-0.702
0.810	-0.600	0.290	-0.664	0.400	-0.597	0.700	-0.666
0.840	-0.661	0.310	-0.623	0.410	0.517**	0.750	-0.833
0.900	-0.435	0.320	-0.644	0.430	-0.637	0.800	-0.705
0.960	-0.244	0.340	-0.613	0.440	-0.610	0.830	-0.634
		0.350	-0.234**	0.460	-0.609	0.900	-0.380
		0.370	-0.592	0.490	-0.581	0.960	-0.350
		0.380	-0.615	0.500	-0.606		
		0.400	-0.332	0.520	-0.607		
		0.410	-0.568	0.540	-0.596		
		0.430	-0.539	0.550	-0.588		
		0.440	-0.531	0.580	-0.587		
		0.460	-0.528	0.600	-0.639		
		0.470	-0.559	0.610	-0.646		
		0.490	-0.546	0.650	-0.769		
		0.500	-0.551	0.700	-0.750		
		0.520	-0.527	0.750	-0.802		
		0.530	-0.544	0.820	-0.492		
		0.550	-0.578	0.890	-0.372		
		0.560	-0.596	0.900	-0.371		
		0.580	-0.536	0.960	-0.343		
		0.590	-0.600				
		0.600	-0.572				
		0.640	-0.715				
		0.700	-0.780				
		0.750	-0.144**				
		0.820	-0.504				
		0.870	-0.301				
		0.930	-0.325				
		0.960	-0.316				
			Lower Surface				
0.020	-0.005	0.020	0.182	0.020	0.233	0.020	0.406
0.110	0.070	0.060	0.286	0.060	0.329	0.060	0.049
0.230	0.070	0.090	0.253	0.090	0.301	0.110	0.262
0.400	0.053	0.120	0.237	0.120	0.241	0.250	0.127
0.490	0.054	0.200	0.064	0.200	0.085	0.400	0.119
0.630	2.271**	0.260	0.225	0.250	0.198	0.490	0.144
0.750	0.048	0.400	0.163	0.400	0.162	0.580	0.196
0.850	0.060	0.490	0.167	0.490	-0.045	0.650	0.343
0.900	0.147	0.580	0.165	0.580	0.222	0.750	0.534
0.960	0.064	0.640	0.334	0.650	-0.139	0.830	0.562
		0.750	0.208	0.750	0.040	0.900	0.629
		0.870	0.211	0.890	0.607	0.960	0.437
		0.930	0.201	0.930	0.499		
		0.960	0.102	0.960	0.335		
CN =	0.561		0.853		0.869		1.004

Table C-2. Continued.

Flight 216, Wing sweep = 26°, Time = 9-34-22-000, MINF = 0.605, Camber = 10/3, ALPT = 2.08, BETA = -0.27, QINF = 304.8, RNPU = 3.1E+06, CNWP = 0.3029

η = 0.93		0.76		0.59		0.40	
			Upper Surface				
x/c	CP	*x/c*	CP	*x/c*	CP	*x/c*	CP
0.020	0.576	0.000	-0.376	0.000	0.511**	0.010	0.393
0.060	0.101	0.020	0.588	0.020	0.531	0.020	0.215
0.110	-0.247	0.040	0.347	0.060	-0.139**	0.060	-0.332
0.200	-0.328	0.060	-0.046	0.090	-0.363	0.110	-0.705
0.230	-0.285	0.090	-0.279	0.110	-0.538	0.140	-0.610
0.400	-0.224	0.130	-0.513	0.130	-3.905**	0.190	-3.905**
0.490	-0.210	0.150	-0.601	0.150	-0.526	0.250	-0.415
0.590	-0.251	0.200	-0.482	0.210	-0.479	0.400	-0.399
0.630	-0.259	0.250	-0.354	0.250	-0.417	0.490	-0.374
0.700	-0.291	0.260	-0.362	0.340	-0.415	0.580	-0.437
0.750	-0.309	0.280	-0.357	0.370	-0.429	0.650	-0.612
0.810	-0.265	0.290	-0.357	0.400	-0.381	0.700	-0.591
0.840	-0.298	0.310	-0.339	0.410	0.525**	0.750	-0.868
0.900	-0.201	0.320	-0.357	0.430	-0.424	0.800	-0.985
0.960	-0.068	0.340	-0.351	0.440	-0.434	0.830	-0.857
		0.350	-0.171**	0.460	-0.417	0.900	-0.394
		0.370	-0.350	0.490	-0.411	0.960	-0.430
		0.380	-0.366	0.500	-0.437		
		0.400	-0.337	0.520	-0.461		
		0.410	-0.351	0.540	-0.455		
		0.430	-0.340	0.550	-0.448		
		0.440	-0.335	0.580	-0.415		
		0.460	-0.347	0.600	-0.503		
		0.470	-0.382	0.610	-0.514		
		0.490	-0.376	0.650	-0.693		
		0.500	-0.383	0.700	-0.671		
		0.520	-0.364	0.750	-0.745		
		0.530	-0.390	0.820	-0.597		
		0.550	-0.415	0.890	-0.326		
		0.560	-0.441	0.900	-0.341		
		0.580	-0.397	0.960	-0.315		
		0.590	-0.456				
		0.600	-0.417				
		0.640	-0.604				
		0.700	-0.692				
		0.750	-0.214**				
		0.820	-0.607				
		0.870	-0.435				
		0.930	-0.286				
		0.960	-0.281				
			Lower Surface				
0.020	-1.257	0.020	-0.926	0.020	-0.756	0.020	-0.965
0.110	-0.207	0.060	-0.329	0.060	-0.148	0.060	0.004
0.230	-0.057	0.090	-0.136	0.090	-0.090	0.110	-0.195
0.400	-0.022	0.120	-0.029	0.120	-0.080	0.250	-0.118
0.490	0.005	0.200	-0.057	0.200	-0.029	0.400	-0.059
0.630	2.307**	0.260	0.015	0.250	-0.022	0.490	0.000
0.750	0.013	0.400	0.030	0.400	0.010	0.580	0.087
0.850	0.033	0.490	0.057	0.490	-0.131	0.650	0.283
0.900	0.106	0.580	0.098	0.580	0.140	0.750	0.467
0.960	0.091	0.640	0.248	0.650	-0.206	0.830	0.517
		0.750	0.109	0.750	-0.002	0.900	0.566
		0.870	0.113	0.890	0.545	0.960	0.415
		0.930	0.139	0.930	0.468		
		0.960	0.060	0.960	0.313		
CN =	0.194		0.434		0.492		0.620

Table C-2. Continued.

Flight 216, Wing sweep = 26°, Time = 9-34-33-000, MINF = 0.601, Camber = 10/3, ALPT = 8.18, BETA = 0.19, QINF = 300.9, RNPU = 3.1E+06, CNWP = 0.4915

η = 0.93		0.76		0.59		0.40	
			Upper Surface				
x/c	CP	*x/c*	CP	*x/c*	CP	*x/c*	CP
0.020	-0.081	0.000	0.819	0.000	0.832**	0.010	-0.854
0.060	-0.532	0.020	-0.413	0.020	-0.581	0.020	-0.834
0.110	-0.786	0.040	-0.004	0.060	-0.962**	0.060	-1.496
0.200	-0.672	0.060	-0.954	0.090	-1.253	0.110	-1.603
0.230	-0.589	0.090	-1.127	0.110	-1.512	0.140	-1.305
0.400	-0.379	0.130	-1.439	0.130	-3.949**	0.190	-3.949**
0.490	-0.342	0.150	-1.589	0.150	-1.178	0.250	-0.713
0.590	-0.378	0.200	-1.038	0.210	-0.954	0.400	-0.578
0.630	-0.385	0.250	-0.713	0.250	-0.764	0.490	-0.522
0.700	-0.407	0.260	-0.698	0.340	-0.671	0.580	-0.559
0.750	-0.427	0.280	-0.677	0.370	-0.666	0.650	-0.681
0.810	-0.383	0.290	-0.643	0.400	-0.579	0.700	-0.662
0.840	-0.423	0.310	-0.609	0.410	0.538**	0.750	-0.793
0.900	-0.329	0.320	-0.630	0.430	-0.635	0.800	-0.671
0.960	-0.189	0.340	-0.605	0.440	-0.616	0.830	-0.583
		0.350	-0.225**	0.460	-0.593	0.900	-0.345
		0.370	-0.574	0.490	-0.562	0.960	-0.338
		0.380	-0.591	0.500	-0.590		
		0.400	-0.324	0.520	-0.618		
		0.410	-0.550	0.540	-0.609		
		0.430	-0.526	0.550	-0.589		
		0.440	-0.526	0.580	-0.581		
		0.460	-0.528	0.600	-0.627		
		0.470	-0.544	0.610	-0.632		
		0.490	-0.529	0.650	-0.761		
		0.500	-0.534	0.700	-0.747		
		0.520	-0.513	0.750	-0.793		
		0.530	-0.522	0.820	-0.501		
		0.550	-0.543	0.890	-0.345		
		0.560	-0.570	0.900	-0.370		
		0.580	-0.512	0.960	-0.336		
		0.590	-0.571				
		0.600	-0.549				
		0.640	-0.687				
		0.700	-0.757				
		0.750	-0.178**				
		0.820	-0.584				
		0.870	-0.285				
		0.930	-0.299				
		0.960	-0.298				
			Lower Surface				
0.020	0.001	0.020	0.196	0.020	0.245	0.020	0.424
0.110	0.078	0.060	0.296	0.060	0.344	0.060	0.057
0.230	0.070	0.090	0.260	0.090	0.311	0.110	0.276
0.400	0.046	0.120	0.246	0.120	0.249	0.250	0.136
0.490	0.039	0.200	0.068	0.200	0.093	0.400	0.128
0.630	2.343**	0.260	0.216	0.250	0.209	0.490	0.150
0.750	-0.003	0.400	0.162	0.400	0.168	0.580	0.183
0.850	0.007	0.490	0.134	0.490	-0.076	0.650	0.351
0.900	0.079	0.580	0.156	0.580	0.227	0.750	0.541
0.960	0.042	0.640	0.315	0.650	-0.180	0.830	0.581
		0.750	0.156	0.750	0.033	0.900	0.635
		0.870	0.173	0.890	0.594	0.960	0.444
		0.930	0.172	0.930	0.501		
		0.960	0.081	0.960	0.331		
CN =	0.469		0.824		0.854		0.992

Table C-2. Continued.

Flight 216, Wing sweep = 26°, Time = 9-34-37-000, MINF = 0.604, Camber = 10/3, ALPT = 12.05, BETA = 0.02, QINF = 304.6, RNPU = 3.1E+06, CNWP = 0.7376

η = 0.93		0.76		0.59		0.40	
			Upper Surface				
x/c	CP	*x/c*	CP	*x/c*	CP	*x/c*	CP
0.020	-0.937	0.000	0.340	0.000	0.417**	0.010	-2.036
0.060	-1.190	0.020	-1.479	0.020	-2.067	0.020	-2.129
0.110	-1.224	0.040	0.010	0.060	-1.374**	0.060	-1.991
0.200	-0.934	0.060	-1.660	0.090	-2.123	0.110	-1.844
0.230	-0.808	0.090	-1.950	0.110	-2.202	0.140	-1.603
0.400	-0.538	0.130	-1.598	0.130	-3.915**	0.190	-3.915**
0.490	-0.468	0.150	-1.973	0.150	-1.557	0.250	-0.786
0.590	-0.507	0.200	-1.633	0.210	-1.535	0.400	-0.645
0.630	-0.529	0.250	-1.076	0.250	-1.208	0.490	-0.556
0.700	-0.525	0.260	-0.961	0.340	-0.879	0.580	-0.555
0.750	-0.542	0.280	-0.889	0.370	-0.807	0.650	-0.604
0.810	-0.498	0.290	-0.795	0.400	-0.718	0.700	-0.595
0.840	-0.557	0.310	-0.737	0.410	0.518**	0.750	-0.662
0.900	-0.433	0.320	-0.755	0.430	-0.716	0.800	-0.669
0.960	-0.287	0.340	-0.723	0.440	-0.702	0.830	-0.494
		0.350	-0.247**	0.460	-0.672	0.900	-0.485
		0.370	-0.672	0.490	-0.624	0.960	-0.449
		0.380	-0.699	0.500	-0.646		
		0.400	-0.335	0.520	-0.682		
		0.410	-0.648	0.540	-0.639		
		0.430	-0.602	0.550	-0.610		
		0.440	-0.605	0.580	-0.631		
		0.460	-0.607	0.600	-0.650		
		0.470	-0.622	0.610	-0.635		
		0.490	-0.596	0.650	-0.768		
		0.500	-0.606	0.700	-0.702		
		0.520	-0.585	0.750	-0.751		
		0.530	-0.584	0.820	-0.668		
		0.550	-0.615	0.890	-0.371		
		0.560	-0.618	0.900	-0.342		
		0.580	-0.589	0.960	-0.300		
		0.590	-0.636				
		0.600	-0.591				
		0.640	-0.702				
		0.700	-0.765				
		0.750	-0.122**				
		0.820	-0.533				
		0.870	-0.235				
		0.930	-0.216				
		0.960	-0.215				
			Lower Surface				
0.020	0.344	0.020	0.585	0.020	0.607	0.020	0.697
0.110	0.221	0.060	0.513	0.060	0.551	0.060	0.081
0.230	0.117	0.090	0.455	0.090	0.501	0.110	0.480
0.400	0.085	0.120	0.394	0.120	0.410	0.250	0.270
0.490	0.097	0.200	0.128	0.200	0.141	0.400	0.231
0.630	2.301**	0.260	0.341	0.250	0.326	0.490	0.246
0.750	-0.004	0.400	0.241	0.400	0.258	0.580	0.263
0.850	-0.017	0.490	0.227	0.490	0.010	0.650	0.383
0.900	0.046	0.580	0.202	0.580	0.275	0.750	0.573
0.960	-0.003	0.640	0.340	0.650	-0.121	0.830	0.613
		0.750	0.181	0.750	0.075	0.900	0.664
		0.870	0.241	0.890	0.616	0.960	0.452
		0.930	0.199	0.930	0.506		
		0.960	0.105	0.960	0.324		
CN =	0.696		1.054		1.123		1.177

Table C-2. Continued.

Flight 216, Wing sweep = 26°, Time = 9-35-21-000, MINF = 0.596, Camber = 10/0, ALPT = 2.00, BETA = 0.17, QINF = 295.2, RNPU = 3.0E+06, CNWP = 0.2870

η = 0.93		0.76		0.59		0.40	
			Upper Surface				
x/c	CP	*x/c*	CP	*x/c*	CP	*x/c*	CP
0.020	0.597	0.000	-0.452	0.000	0.430**	0.010	0.432
0.060	0.090	0.020	0.621	0.020	0.559	0.020	0.269
0.110	-0.213	0.040	0.372	0.060	-0.157**	0.060	-0.263
0.200	-0.306	0.060	-0.021	0.090	-0.348	0.110	-0.633
0.230	-0.262	0.090	-0.249	0.110	-0.506	0.140	-0.581
0.400	-0.198	0.130	-0.476	0.130	-4.023**	0.190	-4.023**
0.490	-0.177	0.150	-0.573	0.150	-0.505	0.250	-0.398
0.590	-0.202	0.200	-0.451	0.210	-0.453	0.400	-0.389
0.630	-0.190	0.250	-0.332	0.250	-0.399	0.490	-0.363
0.700	-0.179	0.260	-0.344	0.340	-0.404	0.580	-0.424
0.750	-0.155	0.280	-0.330	0.370	-0.392	0.650	-0.606
0.810	-0.112	0.290	-0.330	0.400	-0.353	0.700	-0.584
0.840	-0.138	0.310	-0.319	0.410	0.551**	0.750	-0.864
0.900	-0.129	0.320	-0.342	0.430	-0.413	0.800	-0.987
0.960	-0.032	0.340	-0.333	0.440	-0.411	0.830	-0.835
		0.350	-0.161**	0.460	-0.407	0.900	-0.384
		0.370	-0.329	0.490	-0.399	0.960	-0.425
		0.380	-0.346	0.500	-0.428		
		0.400	-0.330	0.520	-0.455		
		0.410	-0.334	0.540	-0.440		
		0.430	-0.321	0.550	-0.430		
		0.440	-0.332	0.580	-0.434		
		0.460	-0.328	0.600	-0.500		
		0.470	-0.360	0.610	-0.508		
		0.490	-0.353	0.650	-0.661		
		0.500	-0.362	0.700	-0.661		
		0.520	-0.334	0.750	-0.744		
		0.530	-0.368	0.820	-0.617		
		0.550	-0.397	0.890	-0.330		
		0.560	-0.411	0.900	-0.341		
		0.580	-0.381	0.960	-0.320		
		0.590	-0.426				
		0.600	-0.410				
		0.640	-0.582				
		0.700	-0.671				
		0.750	-0.263**				
		0.820	-0.662				
		0.870	-0.606				
		0.930	-0.338				
		0.960	-0.337				
			Lower Surface				
0.020	-1.067	0.020	-1.007	0.020	-0.865	0.020	-1.087
0.110	-0.252	0.060	-0.375	0.060	-0.198	0.060	-0.002
0.230	-0.068	0.090	-0.205	0.090	-0.108	0.110	-0.206
0.400	-0.036	0.120	-0.079	0.120	-0.106	0.250	-0.124
0.490	-0.008	0.200	-0.068	0.200	-0.042	0.400	-0.058
0.630	2.391**	0.260	0.003	0.250	-0.028	0.490	0.003
0.750	-0.031	0.400	0.018	0.400	0.000	0.580	0.084
0.850	-0.013	0.490	0.038	0.490	-0.163	0.650	0.287
0.900	0.044	0.580	0.072	0.580	0.139	0.750	0.467
0.960	0.072	0.640	0.220	0.650	-0.246	0.830	0.511
		0.750	0.036	0.750	-0.004	0.900	0.567
		0.870	0.055	0.890	0.542	0.960	0.415
		0.930	0.090	0.930	0.459		
		0.960	0.023	0.960	0.322		
CN =	0.113		0.401		0.469		0.599

Table C-2. Continued.

Flight 216, Wing sweep = 26°, Time = 9-35-37-500, MINF = 0.606, Camber = 10/0, ALPT = 8.16, BETA = 0.22, QINF = 305.5, RNPU = 3.1E+06, CNWP = 0.4777

η = 0.93		0.76		0.59		0.40	
			Upper Surface				
x/c	CP	*x/c*	CP	*x/c*	CP	*x/c*	CP
0.020	-0.069	0.000	0.807	0.000	0.786**	0.010	-0.821
0.060	-0.526	0.020	-0.390	0.020	-0.545	0.020	-0.787
0.110	-0.772	0.040	-0.492	0.060	-0.883**	0.060	-1.494
0.200	-0.656	0.060	-0.960	0.090	-1.255	0.110	-1.599
0.230	-0.583	0.090	-1.122	0.110	-1.501	0.140	-1.332
0.400	-0.372	0.130	-1.419	0.130	-3.896**	0.190	-3.896**
0.490	-0.318	0.150	-1.669	0.150	-1.205	0.250	-0.723
0.590	-0.310	0.200	-1.017	0.210	-0.937	0.400	-0.576
0.630	-0.313	0.250	-0.723	0.250	-0.762	0.490	-0.530
0.700	-0.274	0.260	-0.701	0.340	-0.667	0.580	-0.561
0.750	-0.254	0.280	-0.679	0.370	-0.669	0.650	-0.682
0.810	-0.215	0.290	-0.645	0.400	-0.584	0.700	-0.673
0.840	-0.261	0.310	-0.608	0.410	0.523**	0.750	-0.809
0.900	-0.237	0.320	-0.628	0.430	-0.617	0.800	-0.688
0.960	-0.144	0.340	-0.588	0.440	-0.617	0.830	-0.622
		0.350	-0.217**	0.460	-0.585	0.900	-0.356
		0.370	-0.575	0.490	-0.574	0.960	-0.353
		0.380	-0.593	0.500	-0.601		
		0.400	-0.329	0.520	-0.613		
		0.410	-0.546	0.540	-0.592		
		0.430	-0.501	0.550	-0.575		
		0.440	-0.505	0.580	-0.575		
		0.460	-0.517	0.600	-0.612		
		0.470	-0.531	0.610	-0.643		
		0.490	-0.508	0.650	-0.774		
		0.500	-0.525	0.700	-0.753		
		0.520	-0.481	0.750	-0.809		
		0.530	-0.510	0.820	-0.514		
		0.550	-0.547	0.890	-0.388		
		0.560	-0.564	0.900	-0.375		
		0.580	-0.491	0.960	-0.365		
		0.590	-0.557				
		0.600	-0.537				
		0.640	-0.681				
		0.700	-0.759				
		0.750	-0.242**				
		0.820	-0.633				
		0.870	-0.434				
		0.930	-0.333				
		0.960	-0.339				
			Lower Surface				
0.020	-0.029	0.020	0.170	0.020	0.235	0.020	0.397
0.110	0.056	0.060	0.268	0.060	0.325	0.060	0.032
0.230	0.053	0.090	0.241	0.090	0.295	0.110	0.271
0.400	0.021	0.120	0.225	0.120	0.229	0.250	0.120
0.490	0.004	0.200	0.057	0.200	0.079	0.400	0.113
0.630	2.301**	0.260	0.199	0.250	0.185	0.490	0.138
0.750	-0.072	0.400	0.143	0.400	0.155	0.580	0.198
0.850	-0.060	0.490	0.140	0.490	-0.096	0.650	0.340
0.900	-0.004	0.580	0.126	0.580	0.225	0.750	0.532
0.960	0.013	0.640	0.297	0.650	-0.212	0.830	0.583
		0.750	0.076	0.750	0.029	0.900	0.628
		0.870	0.105	0.890	0.600	0.960	0.434
		0.930	0.114	0.930	0.491		
		0.960	0.031	0.960	0.341		
CN =	0.375		0.815		0.847		0.991

Table C-2. Continued.

Flight 216, Wing sweep = 26°, Time = 9-35-42-500, MINF = 0.601, Camber = 10/0, ALPT = 11.92, BETA = -0.04, QINF = 300.9, RNPU = 3.1E+06, CNWP = 0.7079

η = 0.93		0.76		0.59		0.40	
			Upper Surface				
x/c	CP	x/c	CP	x/c	CP	x/c	CP
0.020	-0.888	0.000	0.386	0.000	0.432**	0.010	-1.992
0.060	-1.113	0.020	-1.433	0.020	-2.000	0.020	-2.041
0.110	-1.193	0.040	-0.011	0.060	-1.332**	0.060	-2.040
0.200	-0.894	0.060	-1.661	0.090	-2.087	0.110	-1.760
0.230	-0.737	0.090	-1.908	0.110	-2.180	0.140	-1.420
0.400	-0.496	0.130	-1.614	0.130	-3.959**	0.190	-3.959**
0.490	-0.419	0.150	-2.008	0.150	-1.654	0.250	-0.835
0.590	-0.432	0.200	-1.601	0.210	-1.573	0.400	-0.622
0.630	-0.428	0.250	-0.898	0.250	-1.040	0.490	-0.518
0.700	-0.392	0.260	-0.815	0.340	-0.743	0.580	-0.520
0.750	-0.347	0.280	-0.789	0.370	-0.719	0.650	-0.572
0.810	-0.308	0.290	-0.737	0.400	-0.598	0.700	-0.552
0.840	-0.360	0.310	-0.699	0.410	0.527**	0.750	-0.613
0.900	-0.329	0.320	-0.713	0.430	-0.647	0.800	-0.591
0.960	-0.220	0.340	-0.688	0.440	-0.639	0.830	-0.438
		0.350	-0.259**	0.460	-0.619	0.900	-0.421
		0.370	-0.655	0.490	-0.589	0.960	-0.401
		0.380	-0.682	0.500	-0.609		
		0.400	-0.350	0.520	-0.634		
		0.410	-0.622	0.540	-0.617		
		0.430	-0.600	0.550	-0.594		
		0.440	-0.581	0.580	-0.580		
		0.460	-0.592	0.600	-0.633		
		0.470	-0.616	0.610	-0.627		
		0.490	-0.593	0.650	-0.793		
		0.500	-0.591	0.700	-0.726		
		0.520	-0.557	0.750	-0.783		
		0.530	-0.571	0.820	-0.674		
		0.550	-0.598	0.890	-0.367		
		0.560	-0.608	0.900	-0.358		
		0.580	-0.567	0.960	-0.311		
		0.590	-0.615				
		0.600	-0.585				
		0.640	-0.711				
		0.700	-0.782				
		0.750	-0.218**				
		0.820	-0.555				
		0.870	-0.347				
		0.930	-0.300				
		0.960	-0.313				
			Lower Surface				
0.020	0.322	0.020	0.556	0.020	0.597	0.020	0.695
0.110	0.201	0.060	0.498	0.060	0.546	0.060	0.071
0.230	0.107	0.090	0.440	0.090	0.486	0.110	0.495
0.400	0.075	0.120	0.373	0.120	0.395	0.250	0.272
0.490	0.057	0.200	0.100	0.200	0.125	0.400	0.233
0.630	2.332**	0.260	0.323	0.250	0.329	0.490	0.238
0.750	-0.057	0.400	0.236	0.400	0.245	0.580	0.255
0.850	-0.078	0.490	0.204	0.490	-0.044	0.650	0.392
0.900	-0.016	0.580	0.186	0.580	0.281	0.750	0.578
0.960	-0.022	0.640	0.322	0.650	-0.190	0.830	0.599
		0.750	0.108	0.750	0.036	0.900	0.652
		0.870	0.149	0.890	0.626	0.960	0.444
		0.930	0.147	0.930	0.515		
		0.960	0.063	0.960	0.353		
CN =	0.585		1.021		1.082		1.138

Table C-2. Continued.

Flight 198, Wing sweep = 26°, Time = 13-6-58-500, MINF = 0.600, Camber = 0/2, ALPT = 7.01, BETA = 0.60, QINF = 276.3, RNPU = 2.8E+06, CNWP = 0.2999

η = 0.93		0.76		0.59		0.40	
			Upper Surface				
x/c	CP	x/c	CP	x/c	CP	x/c	CP
0.020	-0.575	0.000	0.601	0.000	-7.991**	0.010	-2.228**
0.060	-0.376	0.020	-1.110**	0.020	-1.242**	0.020	-1.383**
0.110	-0.287	0.040	-0.721	0.060	-1.762**	0.060	-0.954
0.200	-0.284	0.060	-0.618	0.090	-0.616	0.110	-0.679
0.230	-0.282	0.090	-0.486	0.110	-0.574	0.140	2.071**
0.400	-0.190	0.130	-0.510	0.130	-0.605	0.190	-7.847**
0.490	-0.178	0.150	-0.444	0.150	-0.462	0.250	-0.478
0.590	-0.202	0.200	-0.404	0.210	-0.554	0.400	-0.362
0.630	-0.212	0.250	-0.368	0.250	-0.452	0.490	-0.322
0.700	-0.229	0.260	-0.364	0.340	-0.393	0.580	-0.309
0.750	-0.186	0.280	-0.359	0.370	-0.395	0.650	-0.370
0.810	-0.191	0.290	-0.359	0.400	-0.353	0.700	-0.324
0.840	-0.197	0.310	-0.326	0.410	-0.325	0.750	-0.318
0.900	-0.112	0.320	-0.331	0.430	-0.357	0.800	-0.247
0.960	-0.021	0.340	-0.334	0.440	-0.354	0.830	-0.274
		0.350	-0.103**	0.460	-0.330	0.900	-0.143
		0.370	-0.315	0.490	-0.276	0.960	0.012
		0.380	-0.289	0.500	-0.312		
		0.400	-0.256	0.520	-0.330		
		0.410	-0.284	0.540	-0.302		
		0.430	-0.274	0.550	-0.282		
		0.440	-0.270	0.580	-0.265		
		0.460	-0.278	0.600	-0.313		
		0.470	-0.322	0.610	-0.238		
		0.490	-0.268	0.650	-4.889**		
		0.500	-0.261	0.700	-0.315		
		0.520	-0.259	0.750	-0.260		
		0.530	-0.249	0.820	-0.284		
		0.550	-0.249	0.890	-0.121		
		0.560	-0.260	0.900	-0.103		
		0.580	-0.227	0.960	-0.026		
		0.590	-0.263				
		0.600	-0.255				
		0.640	-4.714**				
		0.700	-0.267				
		0.750	-0.241				
		0.820	-4.902**				
		0.870	-0.183				
		0.930	-0.076				
		0.960	-0.021				
			Lower Surface				
0.020	0.111	0.020	0.271	0.020	0.374	0.020	0.666
0.110	-0.031	0.060	0.211	0.060	0.263	0.060	1.589**
0.230	0.035	0.090	0.144	0.090	0.184	0.110	0.125
0.400	-0.031	0.120	0.053	0.120	0.039	0.250	-0.037
0.490	-0.047	0.200	0.070	0.200	0.091	0.400	-0.058
0.630	1.636**	0.260	-0.012	0.250	-0.023	0.490	-0.097
0.750	0.018	0.400	-4.921**	0.400	-0.047	0.580	-0.135
0.850	0.082	0.490	-0.055	0.490	0.002	0.650	-0.027
0.900	0.126	0.580	-0.025	0.580	-0.111	0.750	0.173
0.960	0.124	0.640	0.289	0.650	0.013	0.830	0.271
		0.750	0.125	0.750	0.242	0.900	0.335
		0.870	0.216	0.890	********	0.960	0.258
		0.930	0.183	0.930	0.228		
		0.960	0.118	0.960	-4.920**		
CN =	0.215		0.377		0.394		0.404

Table C-2. Continued.

Flight 198, Wing sweep = 26°, Time = 13-7-40-000, MINF = 0.604, Camber = 2/2, ALPT = 6.99, BETA = 0.63, QINF = 279.9, RNPU = 2.9E+06, CNWP = 0.3048

η = 0.93		0.76		0.59		0.40	
			Upper Surface				
x/c	CP	*x/c*	CP	*x/c*	CP	*x/c*	CP
0.020	-0.396	0.000	0.789	0.000	-7.884**	0.010	-1.948**
0.060	-0.329	0.020	-0.734**	0.020	-0.985**	0.020	-1.001**
0.110	-0.379	0.040	-0.585	0.060	-1.697**	0.060	-0.984
0.200	-0.319	0.060	-0.591	0.090	-0.662	0.110	-0.784
0.230	-0.356	0.090	-0.524	0.110	-0.662	0.140	2.060**
0.400	-0.205	0.130	-0.578	0.130	-0.711	0.190	-7.742**
0.490	-0.189	0.150	-0.542	0.150	-0.534	0.250	-0.454
0.590	-0.201	0.200	-0.461	0.210	-0.595	0.400	-0.370
0.630	-0.207	0.250	-0.374	0.250	-0.467	0.490	-0.341
0.700	-0.227	0.260	-0.386	0.340	-0.410	0.580	-0.303
0.750	-0.189	0.280	-0.381	0.370	-0.396	0.650	-0.371
0.810	-0.203	0.290	-0.371	0.400	-0.370	0.700	-0.306
0.840	-0.192	0.310	-0.351	0.410	-0.335	0.750	-0.311
0.900	-0.113	0.320	-0.338	0.430	-0.366	0.800	-0.257
0.960	-0.019	0.340	-0.357	0.440	-0.358	0.830	-0.278
		0.350	-0.100**	0.460	-0.335	0.900	-0.149
		0.370	-0.324	0.490	-0.334	0.960	-0.001
		0.380	-0.297	0.500	-0.315		
		0.400	-0.251	0.520	-0.324		
		0.410	-0.296	0.540	-0.310		
		0.430	-0.268	0.550	-0.290		
		0.440	-0.274	0.580	-0.259		
		0.460	-0.298	0.600	-0.319		
		0.470	-0.301	0.610	-0.233		
		0.490	-0.270	0.650	-4.823**		
		0.500	-0.255	0.700	-0.320		
		0.520	-0.253	0.750	-0.266		
		0.530	-0.251	0.820	-0.278		
		0.550	-0.263	0.890	-0.122		
		0.560	-0.274	0.900	-0.105		
		0.580	-0.229	0.960	-0.027		
		0.590	-0.252				
		0.600	-0.276				
		0.640	-4.650**				
		0.700	-0.269				
		0.750	-0.239				
		0.820	-4.836**				
		0.870	-0.178				
		0.930	-0.080				
		0.960	-0.018				
			Lower Surface				
0.020	0.019	0.020	0.135	0.020	0.263	0.020	0.544
0.110	-0.058	0.060	0.175	0.060	0.234	0.060	1.570**
0.230	-0.028	0.090	0.116	0.090	0.157	0.110	0.104
0.400	-0.032	0.120	0.054	0.120	0.023	0.250	-0.034
0.490	-0.036	0.200	0.010	0.200	0.070	0.400	-0.051
0.630	1.617**	0.260	0.006	0.250	-0.013	0.490	-0.093
0.750	0.024	0.400	-4.855**	0.400	-0.044	0.580	-0.120
0.850	0.084	0.490	-0.052	0.490	-0.011	0.650	-0.047
0.900	0.130	0.580	-0.022	0.580	-0.107	0.750	0.179
0.960	0.120	0.640	0.288	0.650	0.015	0.830	0.274
		0.750	0.126	0.750	0.233	0.900	0.337
		0.870	0.215	0.890	********	0.960	0.257
		0.930	0.195	0.930	0.236		
		0.960	0.115	0.960	-4.853**		
CN =	0.221		0.384		0.407		0.417

Table C-2. Continued.

Flight 198, Wing sweep = 26°, Time = 13-7-42-000, MINF = 0.605, Camber = 3/2, ALPT = 7.05, BETA = 0.60, QINF = 280.6, RNPU = 2.9E+06, CNWP = 0.3033

η = 0.93		0.76		0.59		0.40	
			Upper Surface				
x/c	CP	*x/c*	CP	*x/c*	CP	*x/c*	CP
0.020	-0.311	0.000	0.827	0.000	-7.864**	0.010	-1.875**
0.060	-0.328	0.020	-0.652**	0.020	-0.869**	0.020	-0.931**
0.110	-0.341	0.040	-0.534	0.060	-1.632**	0.060	-0.982
0.200	-0.346	0.060	-0.589	0.090	-0.671	0.110	-0.814
0.230	-0.315	0.090	-0.531	0.110	-0.689	0.140	2.042**
0.400	-0.205	0.130	-0.607	0.130	-0.764	0.190	-7.723**
0.490	-0.200	0.150	-0.566	0.150	-0.551	0.250	-0.498
0.590	-0.204	0.200	-0.483	0.210	-0.604	0.400	-0.369
0.630	-0.210	0.250	-0.380	0.250	-0.474	0.490	-0.325
0.700	-0.227	0.260	-0.385	0.340	-0.417	0.580	-0.313
0.750	-0.188	0.280	-0.379	0.370	-0.395	0.650	-0.386
0.810	-0.194	0.290	-0.380	0.400	-0.369	0.700	-0.327
0.840	-0.191	0.310	-0.354	0.410	-0.343	0.750	-0.318
0.900	-0.110	0.320	-0.347	0.430	-0.365	0.800	-0.256
0.960	-0.018	0.340	-0.349	0.440	-0.357	0.830	-0.277
		0.350	-0.094**	0.460	-0.334	0.900	-0.158
		0.370	-0.323	0.490	-0.333	0.960	0.006
		0.380	-0.301	0.500	-0.325		
		0.400	-0.250	0.520	-0.323		
		0.410	-0.295	0.540	-0.309		
		0.430	-0.280	0.550	-0.289		
		0.440	-0.276	0.580	-0.221		
		0.460	-0.297	0.600	-0.334		
		0.470	-0.300	0.610	-0.232		
		0.490	-0.274	0.650	-4.811**		
		0.500	-0.260	0.700	-0.308		
		0.520	-0.260	0.750	-0.269		
		0.530	-0.254	0.820	-0.277		
		0.550	-0.253	0.890	-0.125		
		0.560	-0.280	0.900	-0.104		
		0.580	-0.228	0.960	-0.023		
		0.590	-0.270				
		0.600	-0.280				
		0.640	-4.638**				
		0.700	-0.268				
		0.750	-0.238				
		0.820	-4.824**				
		0.870	-0.185				
		0.930	-0.080				
		0.960	-0.018				
			Lower Surface				
0.020	-0.022	0.020	0.086	0.020	0.205	0.020	0.498
0.110	-0.049	0.060	0.139	0.060	0.219	0.060	1.566**
0.230	0.013	0.090	0.097	0.090	0.146	0.110	0.104
0.400	-0.024	0.120	0.038	0.120	0.023	0.250	-0.034
0.490	-0.044	0.200	0.002	0.200	0.034	0.400	-0.051
0.630	1.613**	0.260	0.007	0.250	-0.005	0.490	-0.093
0.750	0.020	0.400	-4.842**	0.400	-0.044	0.580	-0.130
0.850	0.084	0.490	-0.051	0.490	-0.010	0.650	-0.047
0.900	0.126	0.580	-0.026	0.580	-0.107	0.750	0.178
0.960	0.125	0.640	0.284	0.650	0.015	0.830	0.269
		0.750	0.126	0.750	0.233	0.900	0.336
		0.870	0.200	0.890	********	0.960	0.259
		0.930	0.210	0.930	0.235		
		0.960	0.119	0.960	-4.841**		
CN =	0.220		0.380		0.408		0.429

Table C-2. Continued.

Flight 198, Wing sweep = 26°, Time = 13-7-45-500, MINF = 0.605, Camber = 4/2, ALPT = 6.99, BETA = 0.55, QINF = 280.6, RNPU = 2.9E+06, CNWP = 0.3034

η = 0.93		0.76		0.59		0.40	
			Upper Surface				
x/c	CP	*x/c*	CP	*x/c*	CP	*x/c*	CP
0.020	-0.158	0.000	0.863	0.000	-7.863**	0.010	-1.422**
0.060	-0.287	0.020	-0.467**	0.020	-0.687**	0.020	-0.850**
0.110	-0.352	0.040	-0.461	0.060	-1.657**	0.060	-0.980
0.200	-0.358	0.060	-0.538	0.090	-0.692	0.110	-0.865
0.230	-0.333	0.090	-0.539	0.110	-0.726	0.140	2.037**
0.400	-0.211	0.130	-0.630	0.130	-0.811	0.190	-7.721**
0.490	-0.191	0.150	-0.619	0.150	-0.584	0.250	-0.511
0.590	-0.207	0.200	-0.511	0.210	-0.612	0.400	-0.367
0.630	-0.209	0.250	-0.399	0.250	-0.480	0.490	-0.323
0.700	-0.225	0.260	-0.397	0.340	-0.415	0.580	-0.300
0.750	-0.187	0.280	-0.387	0.370	-0.401	0.650	-0.369
0.810	-0.192	0.290	-0.359	0.400	-0.367	0.700	-0.326
0.840	-0.190	0.310	-0.347	0.410	-0.333	0.750	-0.316
0.900	-0.109	0.320	-0.345	0.430	-0.364	0.800	-0.254
0.960	-0.017	0.340	-0.354	0.440	-0.367	0.830	-0.275
		0.350	-0.092**	0.460	-0.332	0.900	-0.157
		0.370	-0.326	0.490	-0.323	0.960	0.007
		0.380	-0.300	0.500	-0.323		
		0.400	-0.260	0.520	-0.321		
		0.410	-0.296	0.540	-0.322		
		0.430	-0.278	0.550	-0.287		
		0.440	-0.281	0.580	-0.275		
		0.460	-0.295	0.600	-0.317		
		0.470	-0.299	0.610	-0.245		
		0.490	-0.272	0.650	-4.809**		
		0.500	-0.264	0.700	-0.314		
		0.520	-0.267	0.750	-0.263		
		0.530	-0.256	0.820	-0.275		
		0.550	-0.260	0.890	-0.124		
		0.560	-0.258	0.900	-0.103		
		0.580	-0.233	0.960	-0.021		
		0.590	-0.268				
		0.600	-0.273				
		0.640	-4.637**				
		0.700	-0.271				
		0.750	-0.240				
		0.820	-4.822**				
		0.870	-0.176				
		0.930	-0.078				
		0.960	-0.016				
			Lower Surface				
0.020	-0.101	0.020	0.010	0.020	0.138	0.020	0.421
0.110	-0.055	0.060	0.121	0.060	0.193	0.060	1.568**
0.230	0.055	0.090	0.086	0.090	0.132	0.110	0.073
0.400	-0.030	0.120	0.040	0.120	0.006	0.250	-0.029
0.490	-0.042	0.200	0.058	0.200	0.046	0.400	-0.057
0.630	1.614**	0.260	0.016	0.250	-0.003	0.490	-0.095
0.750	0.018	0.400	-4.841**	0.400	-0.053	0.580	-0.128
0.850	0.085	0.490	-0.050	0.490	0.007	0.650	-0.030
0.900	0.131	0.580	-0.020	0.580	-0.113	0.750	0.170
0.960	0.122	0.640	0.286	0.650	0.017	0.830	0.271
		0.750	0.127	0.750	0.234	0.900	0.338
		0.870	0.227	0.890	********	0.960	0.258
		0.930	0.192	0.930	0.233		
		0.960	0.120	0.960	-4.840**		
CN =	0.227		0.385		0.412		0.431

Table C-2. Continued.

Flight 198, Wing sweep = 26°, Time = 13-7-48-500, MINF = 0.606, Camber = 5/2, ALPT = 7.03, BETA = 0.60, QINF = 282.0, RNPU = 2.9E+06, CNWP = 0.3168

η = 0.93		0.76		0.59		0.40	
			Upper Surface				
x/c	CP	*x/c*	CP	*x/c*	CP	*x/c*	CP
0.020	-0.065	0.000	0.868	0.000	-7.824**	0.010	-0.967**
0.060	-0.236	0.020	-0.342**	0.020	-0.559**	0.020	-0.812**
0.110	-0.386	0.040	-0.409	0.060	-1.622**	0.060	-0.997
0.200	-0.384	0.060	-0.551	0.090	-0.733	0.110	-0.955
0.230	-0.331	0.090	-0.564	0.110	-0.790	0.140	2.027**
0.400	-0.210	0.130	-0.689	0.130	-0.884	0.190	-7.683**
0.490	-0.197	0.150	-0.679	0.150	-0.634	0.250	-0.523
0.590	-0.201	0.200	-0.555	0.210	-0.649	0.400	-0.372
0.630	-0.211	0.250	-0.411	0.250	-0.493	0.490	-0.322
0.700	-0.228	0.260	-0.410	0.340	-0.430	0.580	-0.309
0.750	-0.190	0.280	-0.404	0.370	-0.416	0.650	-0.376
0.810	-0.191	0.290	-0.386	0.400	-0.388	0.700	-0.324
0.840	-0.197	0.310	-0.355	0.410	-0.347	0.750	-0.315
0.900	-0.113	0.320	-0.361	0.430	-0.378	0.800	-0.253
0.960	-0.016	0.340	-0.360	0.440	-0.365	0.830	-0.274
		0.350	-0.091**	0.460	-0.342	0.900	-0.156
		0.370	-0.335	0.490	-0.337	0.960	0.008
		0.380	-0.312	0.500	-0.331		
		0.400	-0.270	0.520	-0.337		
		0.410	-0.305	0.540	-0.321		
		0.430	-0.302	0.550	-0.299		
		0.440	-0.289	0.580	-0.255		
		0.460	-0.306	0.600	-0.315		
		0.470	-0.304	0.610	-0.244		
		0.490	-0.279	0.650	-4.785**		
		0.500	-0.285	0.700	-0.319		
		0.520	-0.241	0.750	-0.269		
		0.530	-0.258	0.820	-0.278		
		0.550	-0.268	0.890	-0.123		
		0.560	-0.277	0.900	-0.102		
		0.580	-0.232	0.960	-0.025		
		0.590	-0.257				
		0.600	-0.282				
		0.640	-4.614**				
		0.700	-0.273				
		0.750	-0.231				
		0.820	-4.799**				
		0.870	-0.186				
		0.930	-0.078				
		0.960	-0.016				
			Lower Surface				
0.020	-0.161	0.020	-0.034	0.020	0.105	0.020	0.413
0.110	-0.054	0.060	0.125	0.060	0.192	0.060	1.561**
0.230	0.051	0.090	0.080	0.090	0.131	0.110	0.062
0.400	-0.022	0.120	0.056	0.120	0.015	0.250	-0.025
0.490	-0.038	0.200	0.061	0.200	0.050	0.400	-0.049
0.630	1.607**	0.260	0.024	0.250	0.005	0.490	-0.090
0.750	0.010	0.400	-4.817**	0.400	-0.041	0.580	-0.128
0.850	0.085	0.490	-0.045	0.490	0.007	0.650	-0.030
0.900	0.134	0.580	-0.020	0.580	-0.108	0.750	0.169
0.960	0.126	0.640	0.295	0.650	0.017	0.830	0.279
		0.750	0.127	0.750	0.241	0.900	0.336
		0.870	0.226	0.890	********	0.960	0.257
		0.930	0.192	0.930	0.236		
		0.960	0.120	0.960	-4.816**		
CN =	0.228		0.401		0.431		0.448

Table C-2. Continued.

Flight 198, Wing sweep = 26°, Time = 13-7-52-500, MINF = 0.610, Camber = 6/2, ALPT = 6.93, BETA = 0.52, QINF = 285.2, RNPU = 2.9E+06, CNWP = 0.3034

η = 0.93		0.76		0.59		0.40	
			Upper Surface				
x/c	CP	*x/c*	CP	*x/c*	CP	*x/c*	CP
0.020	0.099	0.000	0.810	0.000	-7.737**	0.010	-0.846**
0.060	-0.225	0.020	-0.136**	0.020	-0.355**	0.020	-0.605**
0.110	-0.383	0.040	-0.286	0.060	-1.585**	0.060	-0.921
0.200	-0.408	0.060	-0.498	0.090	-0.715	0.110	-1.007
0.230	-0.348	0.090	-0.559	0.110	-0.801	0.140	2.003**
0.400	-0.209	0.130	-0.710	0.130	-0.939	0.190	-7.597**
0.490	-0.193	0.150	-0.723	0.150	-0.646	0.250	-0.504
0.590	-0.208	0.200	-0.573	0.210	-0.643	0.400	-0.369
0.630	-0.206	0.250	-0.421	0.250	-0.489	0.490	-0.329
0.700	-0.222	0.260	-0.414	0.340	-0.426	0.580	-0.307
0.750	-0.185	0.280	-0.401	0.370	-0.404	0.650	-0.373
0.810	-0.190	0.290	-0.392	0.400	-0.370	0.700	-0.321
0.840	-0.196	0.310	-0.355	0.410	-0.345	0.750	-0.320
0.900	-0.110	0.320	-0.358	0.430	-0.375	0.800	-0.259
0.960	-0.017	0.340	-0.357	0.440	-0.362	0.830	-0.282
		0.350	-0.102**	0.460	-0.340	0.900	-0.165
		0.370	-0.337	0.490	-0.303	0.960	0.006
		0.380	-0.310	0.500	-0.319		
		0.400	-0.257	0.520	-0.335		
		0.410	-0.303	0.540	-0.318		
		0.430	-0.287	0.550	-0.296		
		0.440	-0.277	0.580	-0.262		
		0.460	-0.304	0.600	-0.326		
		0.470	-0.295	0.610	-0.242		
		0.490	-0.277	0.650	-4.732**		
		0.500	-0.238	0.700	-0.325		
		0.520	-0.264	0.750	-0.267		
		0.530	-0.256	0.820	-0.267		
		0.550	-0.267	0.890	-0.127		
		0.560	-0.268	0.900	-0.105		
		0.580	-0.237	0.960	-0.022		
		0.590	-0.273				
		0.600	-0.280				
		0.640	-4.563**				
		0.700	-0.267				
		0.750	-0.241				
		0.820	-4.745**				
		0.870	-0.185				
		0.930	-0.070				
		0.960	-0.021				
			Lower Surface				
0.020	-0.209	0.020	-0.144	0.020	-0.013	0.020	0.226
0.110	-0.065	0.060	0.083	0.060	0.147	0.060	1.542**
0.230	0.029	0.090	0.056	0.090	0.102	0.110	0.081
0.400	-0.016	0.120	0.078	0.120	-0.004	0.250	-0.026
0.490	-0.039	0.200	0.041	0.200	0.034	0.400	-0.057
0.630	1.587**	0.260	0.030	0.250	0.004	0.490	-0.098
0.750	0.017	0.400	-4.763**	0.400	-0.042	0.580	-0.138
0.850	0.083	0.490	-0.050	0.490	0.005	0.650	-0.038
0.900	0.131	0.580	-0.021	0.580	-0.112	0.750	0.176
0.960	0.128	0.640	0.283	0.650	0.016	0.830	0.274
		0.750	0.129	0.750	0.241	0.900	0.337
		0.870	0.222	0.890	********	0.960	0.259
		0.930	0.196	0.930	0.232		
		0.960	0.117	0.960	-4.762**		
CN =	0.226		0.392		0.423		0.453

Table C-2. Continued.

Flight 198, Wing sweep = 26°, Time = 13-7-55-500, MINF = 0.611, Camber = 7/2, ALPT = 7.00, BETA = 0.52, QINF = 286.6, RNPU = 2.9E+06, CNWP = 0.3070

η = 0.93		0.76		0.59		0.40	
			Upper Surface				
x/c	CP	*x/c*	CP	*x/c*	CP	*x/c*	CP
0.020	0.165	0.000	0.767	0.000	-7.699**	0.010	-0.709**
0.060	-0.223	0.020	-0.033**	0.020	-0.270**	0.020	-0.513**
0.110	-0.405	0.040	-0.244	0.060	-1.544**	0.060	-0.982
0.200	-0.432	0.060	-0.479	0.090	-0.733	0.110	-1.085
0.230	-0.346	0.090	-0.592	0.110	-0.873	0.140	1.993**
0.400	-0.208	0.130	-0.774	0.130	-1.023	0.190	-7.560**
0.490	-0.195	0.150	-0.790	0.150	-0.660	0.250	-0.515
0.590	-0.207	0.200	-0.610	0.210	-0.674	0.400	-0.375
0.630	-0.205	0.250	-0.433	0.250	-0.494	0.490	-0.327
0.700	-0.229	0.260	-0.418	0.340	-0.424	0.580	-0.305
0.750	-0.188	0.280	-0.417	0.370	-0.419	0.650	-0.371
0.810	-0.197	0.290	-0.404	0.400	-0.398	0.700	-0.320
0.840	-0.187	0.310	-0.367	0.410	-0.351	0.750	-0.318
0.900	-0.112	0.320	-0.370	0.430	-0.373	0.800	-0.257
0.960	-0.017	0.340	-0.370	0.440	-0.371	0.830	-0.280
		0.350	-0.113**	0.460	-0.350	0.900	-0.154
		0.370	-0.342	0.490	-0.340	0.960	0.011
		0.380	-0.318	0.500	-0.327		
		0.400	-0.278	0.520	-0.333		
		0.410	-0.311	0.540	-0.316		
		0.430	-0.298	0.550	-0.295		
		0.440	-0.288	0.580	-0.270		
		0.460	-0.308	0.600	-0.324		
		0.470	-0.300	0.610	-0.241		
		0.490	-0.279	0.650	-4.709**		
		0.500	-0.276	0.700	-0.323		
		0.520	-0.270	0.750	-0.273		
		0.530	-0.262	0.820	-0.283		
		0.550	-0.265	0.890	-0.126		
		0.560	-0.260	0.900	-0.107		
		0.580	-0.236	0.960	-0.021		
		0.590	-0.276				
		0.600	-0.278				
		0.640	-4.540**				
		0.700	-0.277				
		0.750	-0.244				
		0.820	-4.722**				
		0.870	-0.188				
		0.930	-0.081				
		0.960	-0.020				
			Lower Surface				
0.020	-0.247	0.020	-0.179	0.020	-0.045	0.020	0.171
0.110	-0.054	0.060	0.091	0.060	0.132	0.060	1.534**
0.230	0.022	0.090	0.065	0.090	0.107	0.110	0.113
0.400	-0.015	0.120	0.070	0.120	0.014	0.250	-0.019
0.490	-0.034	0.200	0.033	0.200	0.027	0.400	-0.056
0.630	1.580**	0.260	0.045	0.250	0.012	0.490	-0.090
0.750	0.021	0.400	-4.740**	0.400	-0.042	0.580	-0.137
0.850	0.083	0.490	-0.042	0.490	0.006	0.650	-0.030
0.900	0.130	0.580	-0.021	0.580	-0.103	0.750	0.176
0.960	0.123	0.640	0.286	0.650	0.016	0.830	0.273
		0.750	0.133	0.750	0.240	0.900	0.336
		0.870	0.240	0.890	********	0.960	0.258
		0.930	0.195	0.930	0.239		
		0.960	0.121	0.960	-4.739**		
CN =	0.231		0.408		0.437		0.472

Table C-2. Continued.

Flight 198, Wing sweep = 26°, Time = 13-7-59-000, MINF = 0.610, Camber = 8/2, ALPT = 6.99, BETA = 0.63, QINF = 285.5, RNPU = 2.9E+06, CNWP = 0.3136

η = 0.93		0.76		0.59		0.40	
			Upper Surface				
x/c	CP	*x/c*	CP	*x/c*	CP	*x/c*	CP
0.020	0.265	0.000	0.650	0.000	-7.730**	0.010	-0.513**
0.060	-0.195	0.020	0.109**	0.020	-0.119**	0.020	-0.449**
0.110	-0.418	0.040	-0.170	0.060	-1.570**	0.060	-0.964
0.200	-0.441	0.060	-0.449	0.090	-0.747	0.110	-1.131
0.230	-0.407	0.090	-0.595	0.110	-0.905	0.140	2.001**
0.400	-0.217	0.130	-0.812	0.130	-1.090	0.190	-7.591**
0.490	-0.196	0.150	-0.835	0.150	-0.715	0.250	-0.518
0.590	-0.208	0.200	-0.636	0.210	-0.682	0.400	-0.376
0.630	-0.206	0.250	-0.435	0.250	-0.503	0.490	-0.329
0.700	-0.226	0.260	-0.420	0.340	-0.426	0.580	-0.307
0.750	-0.184	0.280	-0.419	0.370	-0.412	0.650	-0.372
0.810	-0.166	0.290	-0.411	0.400	-0.377	0.700	-0.321
0.840	-0.191	0.310	-0.368	0.410	-0.353	0.750	-0.320
0.900	-0.108	0.320	-0.372	0.430	-0.375	0.800	-0.251
0.960	-0.010	0.340	-0.371	0.440	-0.373	0.830	-0.281
		0.350	-0.102**	0.460	-0.345	0.900	-0.155
		0.370	-0.344	0.490	-0.334	0.960	0.015
		0.380	-0.319	0.500	-0.329		
		0.400	-0.268	0.520	-0.335		
		0.410	-0.309	0.540	-0.318		
		0.430	-0.299	0.550	-0.296		
		0.440	-0.306	0.580	-0.281		
		0.460	-0.304	0.600	-0.312		
		0.470	-0.301	0.610	-0.242		
		0.490	-0.281	0.650	-4.728**		
		0.500	-0.272	0.700	-0.321		
		0.520	-0.271	0.750	-0.271		
		0.530	-0.260	0.820	-0.285		
		0.550	-0.266	0.890	-0.123		
		0.560	-0.281	0.900	-0.102		
		0.580	-0.237	0.960	-0.033		
		0.590	-0.278				
		0.600	-0.290				
		0.640	-4.559**				
		0.700	-0.275				
		0.750	-0.241				
		0.820	-4.741**				
		0.870	-0.185				
		0.930	-0.078				
		0.960	-0.017				
			Lower Surface				
0.020	-0.278	0.020	-0.244	0.020	-0.112	0.020	0.071
0.110	-0.048	0.060	0.087	0.060	0.133	0.060	1.541**
0.230	0.018	0.090	0.059	0.090	0.102	0.110	0.081
0.400	-0.008	0.120	0.070	0.120	0.019	0.250	-0.012
0.490	-0.035	0.200	0.025	0.200	0.013	0.400	-0.049
0.630	1.586**	0.260	0.053	0.250	0.019	0.490	-0.090
0.750	0.020	0.400	-4.759**	0.400	-0.042	0.580	-0.138
0.850	0.087	0.490	-0.042	0.490	0.005	0.650	-0.031
0.900	0.131	0.580	-0.017	0.580	-0.104	0.750	0.176
0.960	0.128	0.640	0.287	0.650	0.023	0.830	0.274
		0.750	0.133	0.750	0.237	0.900	0.337
		0.870	0.222	0.890	********	0.960	0.259
		0.930	0.196	0.930	0.240		
		0.960	0.121	0.960	-4.758**		
CN =	0.238		0.408		0.443		0.476

Table C-2. Continued.

Flight 198, Wing sweep = 26°, Time = 13-8-1-000, MINF = 0.609, Camber = 9/2, ALPT = 7.03, BETA = 0.60, QINF = 284.8, RNPU = 2.9E+06, CNWP = 0.3253

η = 0.93		0.76		0.59		0.40	
			Upper Surface				
x/c	CP	x/c	CP	x/c	CP	x/c	CP
0.020	0.305	0.000	0.589	0.000	-7.750**	0.010	-0.427**
0.060	-0.188	0.020	0.128**	0.020	-0.044**	0.020	-0.385**
0.110	-0.433	0.040	-0.142	0.060	-1.516**	0.060	-0.968
0.200	-0.464	0.060	-0.419	0.090	-0.773	0.110	-1.198
0.230	-0.370	0.090	-0.616	0.110	-0.956	0.140	2.023**
0.400	-0.215	0.130	-0.850	0.130	-1.158	0.190	-7.611**
0.490	-0.202	0.150	-0.885	0.150	-0.745	0.250	-0.521
0.590	-0.210	0.200	-0.668	0.210	-0.705	0.400	-0.379
0.630	-0.216	0.250	-0.437	0.250	-0.514	0.490	-0.331
0.700	-0.229	0.260	-0.438	0.340	-0.437	0.580	-0.309
0.750	-0.191	0.280	-0.432	0.370	-0.423	0.650	-0.375
0.810	-0.192	0.290	-0.423	0.400	-0.388	0.700	-0.324
0.840	-0.198	0.310	-0.378	0.410	-0.355	0.750	-0.322
0.900	-0.112	0.320	-0.379	0.430	-0.394	0.800	-0.261
0.960	-0.019	0.340	-0.381	0.440	-0.375	0.830	-0.274
		0.350	-0.126**	0.460	-0.351	0.900	-0.148
		0.370	-0.350	0.490	-0.360	0.960	0.013
		0.380	-0.326	0.500	-0.331		
		0.400	-0.270	0.520	-0.337		
		0.410	-0.315	0.540	-0.335		
		0.430	-0.302	0.550	-0.299		
		0.440	-0.295	0.580	-0.292		
		0.460	-0.306	0.600	-0.328		
		0.470	-0.270	0.610	-0.245		
		0.490	-0.287	0.650	-4.741**		
		0.500	-0.280	0.700	-0.331		
		0.520	-0.282	0.750	-0.277		
		0.530	-0.266	0.820	-0.287		
		0.550	-0.269	0.890	-0.129		
		0.560	-0.290	0.900	-0.104		
		0.580	-0.246	0.960	-0.039		
		0.590	-0.280				
		0.600	-0.282				
		0.640	-4.571**				
		0.700	-0.277				
		0.750	-0.247				
		0.820	-4.754**				
		0.870	-0.191				
		0.930	-0.080				
		0.960	-0.019				
			Lower Surface				
0.020	-0.368	0.020	-0.265	0.020	-0.147	0.020	0.029
0.110	-0.043	0.060	0.085	0.060	0.131	0.060	1.542**
0.230	0.012	0.090	0.057	0.090	0.106	0.110	0.079
0.400	-0.006	0.120	0.099	0.120	0.021	0.250	-0.007
0.490	-0.033	0.200	0.020	0.200	0.011	0.400	-0.043
0.630	1.588**	0.260	0.059	0.250	0.025	0.490	-0.092
0.750	0.023	0.400	-4.773**	0.400	-0.033	0.580	-0.129
0.850	0.085	0.490	-0.036	0.490	0.004	0.650	-0.032
0.900	0.129	0.580	-0.015	0.580	-0.106	0.750	0.175
0.960	0.126	0.640	0.289	0.650	0.018	0.830	0.273
		0.750	0.131	0.750	0.240	0.900	0.336
		0.870	0.220	0.890	********	0.960	0.258
		0.930	0.194	0.930	0.238		
		0.960	0.116	0.960	-4.771**		
CN =	0.240		0.416		0.457		0.488

Table C-2. Continued.

Flight 198, Wing sweep = 26°, Time = 13-8-4-000, MINF = 0.608, Camber = 10/2, ALPT = 7.11, BETA = 0.63, QINF = 284.1, RNPU = 2.9E+06, CNWP = 0.3151

η = 0.93		0.76		0.59		0.40	
			Upper Surface				
x/c	CP	*x/c*	CP	*x/c*	CP	*x/c*	CP
0.020	0.370	0.000	0.481	0.000	-7.771**	0.010	-0.296**
0.060	-0.171	0.020	0.209**	0.020	0.048**	0.020	-0.299**
0.110	-0.448	0.040	-0.087	0.060	-1.521**	0.060	-0.973
0.200	-0.481	0.060	-0.422	0.090	-0.771	0.110	-1.223
0.230	-0.393	0.090	-0.638	0.110	-1.008	0.140	2.001**
0.400	-0.221	0.130	-0.902	0.130	-1.240	0.190	-7.631**
0.490	-0.201	0.150	-0.939	0.150	-0.758	0.250	-0.539
0.590	-0.213	0.200	-0.695	0.210	-0.719	0.400	-0.389
0.630	-0.219	0.250	-0.468	0.250	-0.525	0.490	-0.334
0.700	-0.231	0.260	-0.448	0.340	-0.448	0.580	-0.312
0.750	-0.193	0.280	-0.435	0.370	-0.426	0.650	-0.369
0.810	-0.203	0.290	-0.426	0.400	-0.390	0.700	-0.315
0.840	-0.208	0.310	-0.384	0.410	-0.358	0.750	-0.317
0.900	-0.114	0.320	-0.386	0.430	-0.396	0.800	-0.256
0.960	-0.021	0.340	-0.384	0.440	-0.378	0.830	-0.277
		0.350	-0.145**	0.460	-0.357	0.900	-0.150
		0.370	-0.357	0.490	-0.347	0.960	0.007
		0.380	-0.334	0.500	-0.344		
		0.400	-0.284	0.520	-0.340		
		0.410	-0.321	0.540	-0.338		
		0.430	-0.304	0.550	-0.301		
		0.440	-0.301	0.580	-0.276		
		0.460	-0.321	0.600	-0.331		
		0.470	-0.334	0.610	-0.247		
		0.490	-0.290	0.650	-4.755**		
		0.500	-0.282	0.700	-0.333		
		0.520	-0.293	0.750	-0.280		
		0.530	-0.272	0.820	-0.285		
		0.550	-0.271	0.890	-0.131		
		0.560	-0.266	0.900	-0.106		
		0.580	-0.242	0.960	-0.025		
		0.590	-0.283				
		0.600	-0.290				
		0.640	-4.584**				
		0.700	-0.280				
		0.750	-0.250				
		0.820	-4.768**				
		0.870	-0.190				
		0.930	-0.086				
		0.960	-0.028				
			Lower Surface				
0.020	-0.332	0.020	-0.300	0.020	-0.182	0.020	-0.047
0.110	-0.030	0.060	0.080	0.060	0.123	0.060	1.544**
0.230	0.010	0.090	0.062	0.090	0.110	0.110	0.099
0.400	-0.008	0.120	0.102	0.120	0.033	0.250	-0.005
0.490	-0.031	0.200	0.014	0.200	0.002	0.400	-0.045
0.630	1.590**	0.260	0.072	0.250	0.031	0.490	-0.095
0.750	0.021	0.400	-4.786**	0.400	-0.035	0.580	-0.132
0.850	0.084	0.490	-0.038	0.490	0.002	0.650	-0.034
0.900	0.128	0.580	-0.013	0.580	-0.100	0.750	0.173
0.960	0.120	0.640	0.288	0.650	0.020	0.830	0.272
		0.750	0.130	0.750	0.235	0.900	0.335
		0.870	0.248	0.890	********	0.960	0.250
		0.930	0.193	0.930	0.237		
		0.960	0.118	0.960	-4.785**		
CN =	0.246		0.429		0.463		0.497

Table C-2. Continued.

Flight 198, Wing sweep = 26°, Time = 13-8-8-000, MINF = 0.608, Camber = 11/2, ALPT = 7.19, BETA = 0.71, QINF = 283.9, RNPU = 2.9E+06, CNWP = 0.3258

η = 0.93		0.76		0.59		0.40	
			Upper Surface				
x/c	CP	*x/c*	CP	*x/c*	CP	*x/c*	CP
0.020	0.452	0.000	0.289	0.000	-7.779**	0.010	-0.131**
0.060	-0.153	0.020	0.310**	0.020	0.166**	0.020	-0.212**
0.110	-0.474	0.040	-0.021	0.060	-1.471**	0.060	-0.953
0.200	-0.511	0.060	-0.408	0.090	-0.835	0.110	-1.289
0.230	-0.415	0.090	-0.659	0.110	-1.077	0.140	2.013**
0.400	-0.231	0.130	-0.967	0.130	-1.344	0.190	-7.639**
0.490	-0.211	0.150	-1.017	0.150	-0.822	0.250	-0.541
0.590	-0.215	0.200	-0.732	0.210	-0.741	0.400	-0.391
0.630	-0.225	0.250	-0.484	0.250	-0.535	0.490	-0.336
0.700	-0.237	0.260	-0.457	0.340	-0.450	0.580	-0.325
0.750	-0.195	0.280	-0.446	0.370	-0.437	0.650	-0.371
0.810	-0.212	0.290	-0.438	0.400	-0.400	0.700	-0.317
0.840	-0.202	0.310	-0.393	0.410	-0.368	0.750	-0.319
0.900	-0.116	0.320	-0.393	0.430	-0.398	0.800	-0.258
0.960	-0.023	0.340	-0.394	0.440	-0.386	0.830	-0.279
		0.350	-0.147**	0.460	-0.359	0.900	-0.147
		0.370	-0.363	0.490	-0.349	0.960	0.005
		0.380	-0.341	0.500	-0.336		
		0.400	-0.298	0.520	-0.342		
		0.410	-0.327	0.540	-0.333		
		0.430	-0.307	0.550	-0.303		
		0.440	-0.306	0.580	-0.260		
		0.460	-0.323	0.600	-0.333		
		0.470	-0.288	0.610	-0.249		
		0.490	-0.296	0.650	-4.760**		
		0.500	-0.290	0.700	-0.343		
		0.520	-0.278	0.750	-0.278		
		0.530	-0.274	0.820	-0.287		
		0.550	-0.283	0.890	-0.129		
		0.560	-0.295	0.900	-0.102		
		0.580	-0.244	0.960	-0.019		
		0.590	-0.289				
		0.600	-0.287				
		0.640	-4.590**				
		0.700	-0.282				
		0.750	-0.248				
		0.820	-4.773**				
		0.870	-0.192				
		0.930	-0.084				
		0.960	-0.022				
			Lower Surface				
0.020	-0.402	0.020	-0.331	0.020	-0.217	0.020	-0.143
0.110	-0.011	0.060	0.070	0.060	0.114	0.060	1.544**
0.230	0.000	0.090	0.072	0.090	0.113	0.110	0.098
0.400	-0.002	0.120	0.120	0.120	0.054	0.250	0.004
0.490	-0.025	0.200	0.005	0.200	-0.007	0.400	-0.047
0.630	1.589**	0.260	0.086	0.250	0.045	0.490	-0.088
0.750	0.019	0.400	-4.791**	0.400	-0.027	0.580	-0.123
0.850	0.082	0.490	-0.036	0.490	0.000	0.650	-0.028
0.900	0.123	0.580	-0.011	0.580	-0.102	0.750	0.182
0.960	0.123	0.640	0.286	0.650	0.018	0.830	0.279
		0.750	0.128	0.750	0.241	0.900	0.334
		0.870	0.217	0.890	********	0.960	0.248
		0.930	0.191	0.930	0.236		
		0.960	0.116	0.960	-4.790**		
CN =	0.257		0.434		0.477		0.512

Table C-2. Continued.

Flight 198, Wing sweep = 26°, Time = 13-8-11-500, MINF = 0.607, Camber = 12/2, ALPT = 7.23, BETA = 0.63, QINF = 283.6, RNPU = 2.9E+06, CNWP = 0.3378

η = 0.93		0.76		0.59		0.40	
			Upper Surface				
x/c	CP	*x/c*	CP	*x/c*	CP	*x/c*	CP
0.020	0.492	0.000	0.107	0.000	-7.787**	0.010	0.034**
0.060	-0.145	0.020	0.432**	0.020	0.250**	0.020	-0.102**
0.110	-0.488	0.040	0.038	0.060	-1.500**	0.060	-0.911
0.200	-0.513	0.060	-0.378	0.090	-0.826	0.110	-1.291
0.230	-0.338	0.090	-0.670	0.110	-1.117	0.140	2.000**
0.400	-0.229	0.130	-1.018	0.130	-1.469	0.190	-7.647**
0.490	-0.209	0.150	-1.092	0.150	-0.851	0.250	-0.543
0.590	-0.225	0.200	-0.752	0.210	-0.764	0.400	-0.386
0.630	-0.223	0.250	-0.500	0.250	-0.545	0.490	-0.348
0.700	-0.231	0.260	-0.474	0.340	-0.452	0.580	-0.327
0.750	-0.201	0.280	-0.458	0.370	-0.439	0.650	-0.373
0.810	-0.198	0.290	-0.450	0.400	-0.402	0.700	-0.330
0.840	-0.204	0.310	-0.401	0.410	-0.370	0.750	-0.321
0.900	-0.110	0.320	-0.400	0.430	-0.401	0.800	-0.260
0.960	-0.032	0.340	-0.403	0.440	-0.399	0.830	-0.281
		0.350	-0.143**	0.460	-0.361	0.900	-0.144
		0.370	-0.372	0.490	-0.351	0.960	0.008
		0.380	-0.352	0.500	-0.348		
		0.400	-0.300	0.520	-0.344		
		0.410	-0.336	0.540	-0.342		
		0.430	-0.321	0.550	-0.305		
		0.440	-0.308	0.580	-0.271		
		0.460	-0.325	0.600	-0.335		
		0.470	-0.338	0.610	-0.266		
		0.490	-0.298	0.650	-4.766**		
		0.500	-0.298	0.700	-0.334		
		0.520	-0.289	0.750	-0.284		
		0.530	-0.280	0.820	-0.285		
		0.550	-0.285	0.890	-0.135		
		0.560	-0.290	0.900	-0.110		
		0.580	-0.253	0.960	-0.029		
		0.590	-0.291				
		0.600	-0.299				
		0.640	-4.595**				
		0.700	-0.288				
		0.750	-0.254				
		0.820	-4.779**				
		0.870	-0.194				
		0.930	-0.090				
		0.960	-0.024				
			Lower Surface				
0.020	-0.886	0.020	-0.354	0.020	-0.252	0.020	-0.233
0.110	-0.020	0.060	0.068	0.060	0.126	0.060	1.543**
0.230	-0.006	0.090	0.077	0.090	0.122	0.110	0.117
0.400	0.001	0.120	0.142	0.120	0.071	0.250	0.009
0.490	-0.038	0.200	0.003	0.200	-0.009	0.400	-0.041
0.630	1.589**	0.260	0.092	0.250	0.051	0.490	-0.082
0.750	0.017	0.400	-4.797**	0.400	-0.028	0.580	-0.125
0.850	0.076	0.490	-0.034	0.490	0.013	0.650	-0.030
0.900	0.110	0.580	-0.013	0.580	-0.097	0.750	0.175
0.960	0.117	0.640	0.284	0.650	0.020	0.830	0.269
		0.750	0.126	0.750	0.239	0.900	0.332
		0.870	0.216	0.890	********	0.960	0.247
		0.930	0.190	0.930	0.234		
		0.960	0.111	0.960	-4.796**		
CN =	0.245		0.443		0.488		0.517

Table C-2. Continued.

Flight 198, Wing sweep = 26°, Time = 13-8-14-500, MINF = 0.606, Camber = 13/2, ALPT = 7.27, BETA = 0.60, QINF = 282.3, RNPU = 2.9E+06, CNWP = 0.3375

η = 0.93		0.76		0.59		0.40	
			Upper Surface				
x/c	CP	*x/c*	CP	*x/c*	CP	*x/c*	CP
0.020	0.534	0.000	-0.037	0.000	-7.827**	0.010	0.122**
0.060	-0.118	0.020	0.474**	0.020	0.335**	0.020	-0.022**
0.110	-0.505	0.040	0.086	0.060	-1.442**	0.060	-0.940
0.200	-0.545	0.060	-0.349	0.090	-0.832	0.110	-1.300
0.230	-0.421	0.090	-0.676	0.110	-1.153	0.140	2.008**
0.400	-0.236	0.130	-1.060	0.130	-1.561	0.190	-7.686**
0.490	-0.212	0.150	-1.134	0.150	-0.866	0.250	-0.548
0.590	-0.220	0.200	-0.775	0.210	-0.759	0.400	-0.390
0.630	-0.222	0.250	-0.504	0.250	-0.550	0.490	-0.342
0.700	-0.238	0.260	-0.471	0.340	-0.456	0.580	-0.320
0.750	-0.196	0.280	-0.462	0.370	-0.443	0.650	-0.377
0.810	-0.201	0.290	-0.454	0.400	-0.368	0.700	-0.323
0.840	-0.207	0.310	-0.405	0.410	-0.374	0.750	-0.325
0.900	-0.118	0.320	-0.408	0.430	-0.405	0.800	-0.263
0.960	-0.027	0.340	-0.407	0.440	-0.381	0.830	-0.274
		0.350	-0.151**	0.460	-0.365	0.900	-0.147
		0.370	-0.372	0.490	-0.363	0.960	0.001
		0.380	-0.346	0.500	-0.342		
		0.400	-0.292	0.520	-0.348		
		0.410	-0.336	0.540	-0.331		
		0.430	-0.325	0.550	-0.309		
		0.440	-0.318	0.580	-0.284		
		0.460	-0.329	0.600	-0.338		
		0.470	-0.328	0.610	-0.239		
		0.490	-0.301	0.650	-4.791**		
		0.500	-0.290	0.700	-0.337		
		0.520	-0.292	0.750	-0.287		
		0.530	-0.283	0.820	-0.288		
		0.550	-0.288	0.890	-0.133		
		0.560	-0.294	0.900	-0.112		
		0.580	-0.256	0.960	-0.035		
		0.590	-0.290				
		0.600	-0.297				
		0.640	-4.620**				
		0.700	-0.291				
		0.750	-0.253				
		0.820	-4.804**				
		0.870	-0.197				
		0.930	-0.080				
		0.960	-0.026				
			Lower Surface				
0.020	-1.066	0.020	-0.416	0.020	-0.289	0.020	-0.317
0.110	-0.050	0.060	0.059	0.060	0.111	0.060	1.549**
0.230	-0.012	0.090	0.075	0.090	0.126	0.110	0.138
0.400	0.006	0.120	0.152	0.120	0.078	0.250	0.007
0.490	-0.029	0.200	-0.003	0.200	-0.011	0.400	-0.044
0.630	1.595**	0.260	0.090	0.250	0.050	0.490	-0.085
0.750	0.011	0.400	-4.823**	0.400	-0.030	0.580	-0.127
0.850	0.078	0.490	-0.028	0.490	-0.004	0.650	-0.032
0.900	0.117	0.580	-0.011	0.580	-0.099	0.750	0.179
0.960	0.111	0.640	0.291	0.650	0.018	0.830	0.268
		0.750	0.143	0.750	0.238	0.900	0.332
		0.870	0.215	0.890	********	0.960	0.252
		0.930	0.189	0.930	0.233		
		0.960	0.113	0.960	-4.821**		
CN =	0.251		0.449		0.488		0.521

Table C-2. Continued.

Flight 198, Wing sweep = 26°, Time = 13-8-17-500, MINF = 0.604, Camber = 14/2, ALPT = 7.34, BETA = 0.71, QINF = 280.9, RNPU = 2.9E+06, CNWP = 0.3362

η = 0.93		0.76		0.59		0.40	
			Upper Surface				
x/c	CP	*x/c*	CP	*x/c*	CP	*x/c*	CP
0.020	0.578	0.000	-0.154	0.000	-7.866**	0.010	0.190**
0.060	-0.109	0.020	0.559**	0.020	0.423**	0.020	0.041**
0.110	-0.507	0.040	0.129	0.060	-1.409**	0.060	-0.899
0.200	-0.561	0.060	-0.334	0.090	-0.847	0.110	-1.306
0.230	-0.443	0.090	-0.688	0.110	-1.188	0.140	2.018**
0.400	-0.238	0.130	-1.115	0.130	-1.711	0.190	-7.724**
0.490	-0.217	0.150	-1.208	0.150	-0.888	0.250	-0.551
0.590	-0.221	0.200	-0.803	0.210	-0.778	0.400	-0.392
0.630	-0.227	0.250	-0.493	0.250	-0.553	0.490	-0.344
0.700	-0.239	0.260	-0.488	0.340	-0.459	0.580	-0.333
0.750	-0.201	0.280	-0.474	0.370	-0.454	0.650	-0.388
0.810	-0.195	0.290	-0.466	0.400	-0.408	0.700	-0.325
0.840	-0.208	0.310	-0.411	0.410	-0.376	0.750	-0.319
0.900	-0.122	0.320	-0.415	0.430	-0.407	0.800	-0.257
0.960	-0.035	0.340	-0.417	0.440	-0.394	0.830	-0.276
		0.350	-0.164**	0.460	-0.367	0.900	-0.148
		0.370	-0.382	0.490	-0.365	0.960	-0.003
		0.380	-0.353	0.500	-0.374		
		0.400	-0.293	0.520	-0.359		
		0.410	-0.341	0.540	-0.333		
		0.430	-0.326	0.550	-0.311		
		0.440	-0.298	0.580	-0.267		
		0.460	-0.331	0.600	-0.340		
		0.470	-0.344	0.610	-0.256		
		0.490	-0.307	0.650	-4.815**		
		0.500	-0.297	0.700	-0.328		
		0.520	-0.294	0.750	-0.285		
		0.530	-0.281	0.820	-0.286		
		0.550	-0.290	0.890	-0.130		
		0.560	-0.309	0.900	-0.107		
		0.580	-0.258	0.960	-0.020		
		0.590	-0.296				
		0.600	-0.294				
		0.640	-4.643**				
		0.700	-0.285				
		0.750	-0.255				
		0.820	-4.828**				
		0.870	-0.194				
		0.930	-0.089				
		0.960	-0.027				
			Lower Surface				
0.020	-1.101	0.020	-0.418	0.020	-0.290	0.020	-0.384
0.110	-0.051	0.060	0.007	0.060	0.132	0.060	1.556**
0.230	-0.012	0.090	1.298	0.090	0.137	0.110	0.138
0.400	0.006	0.120	0.141	0.120	0.097	0.250	0.021
0.490	-0.014	0.200	-0.007	0.200	-0.019	0.400	-0.036
0.630	1.602**	0.260	0.106	0.250	0.065	0.490	-0.085
0.750	0.027	0.400	-4.847**	0.400	-0.025	0.580	-0.128
0.850	0.075	0.490	-0.024	0.490	-0.004	0.650	-0.017
0.900	0.106	0.580	-0.004	0.580	-0.100	0.750	0.175
0.960	0.103	0.640	0.292	0.650	0.022	0.830	0.269
		0.750	0.126	0.750	0.239	0.900	0.333
		0.870	0.216	0.890	********	0.960	0.253
		0.930	0.189	0.930	0.234		
		0.960	0.114	0.960	-4.845**		
CN =	0.261		0.475		0.496		0.528

Table C-2. Continued.

Flight 198, Wing sweep = 26°, Time = 13-8-21-000, MINF = 0.602, Camber = 15/2, ALPT = 7.35, BETA = 0.63, QINF = 278.6, RNPU = 2.8E+06, CNWP = 0.3416

η = 0.93		0.76		0.59		0.40	
			Upper Surface				
x/c	CP	x/c	CP	x/c	CP	x/c	CP
0.020	0.616	0.000	-0.317	0.000	-7.931**	0.010	0.320**
0.060	-0.070	0.020	0.584**	0.020	0.512**	0.020	0.120**
0.110	-0.524	0.040	0.203	0.060	-1.414**	0.060	-0.839
0.200	-0.580	0.060	-0.287	0.090	-0.828	0.110	-1.317
0.230	-0.487	0.090	-0.694	0.110	-1.211	0.140	2.014**
0.400	-0.240	0.130	-1.161	0.130	-1.762	0.190	-7.788**
0.490	-0.211	0.150	-1.275	0.150	-0.904	0.250	-0.555
0.590	-0.231	0.200	-0.821	0.210	-0.785	0.400	-0.388
0.630	-0.225	0.250	-0.511	0.250	-0.557	0.490	-0.347
0.700	-0.242	0.260	-0.492	0.340	-0.463	0.580	-0.313
0.750	-0.203	0.280	-0.478	0.370	-0.449	0.650	-0.382
0.810	-0.213	0.290	-0.445	0.400	-0.436	0.700	-0.328
0.840	-0.195	0.310	-0.415	0.410	-0.380	0.750	-0.322
0.900	-0.118	0.320	-0.419	0.430	-0.410	0.800	-0.259
0.960	-0.012	0.340	-0.413	0.440	-0.388	0.830	-0.278
		0.350	-0.144**	0.460	-0.370	0.900	-0.139
		0.370	-0.382	0.490	-0.345	0.960	0.005
		0.380	-0.352	0.500	-0.357		
		0.400	-0.308	0.520	-0.353		
		0.410	-0.325	0.540	-0.336		
		0.430	-0.329	0.550	-0.313		
		0.440	-0.320	0.580	-0.288		
		0.460	-0.319	0.600	-0.343		
		0.470	-0.347	0.610	-0.273		
		0.490	-0.306	0.650	-4.855**		
		0.500	-0.294	0.700	-0.323		
		0.520	-0.296	0.750	-0.272		
		0.530	-0.284	0.820	-0.288		
		0.550	-0.302	0.890	-0.131		
		0.560	-0.283	0.900	-0.109		
		0.580	-0.238	0.960	-0.032		
		0.590	-0.295				
		0.600	-0.297				
		0.640	-4.681**				
		0.700	-0.272				
		0.750	-0.253				
		0.820	-4.868**				
		0.870	-0.196				
		0.930	-0.094				
		0.960	-0.027				
			Lower Surface				
0.020	-1.229	0.020	-0.510	0.020	-0.293	0.020	-0.473
0.110	-0.081	0.060	-0.069	0.060	0.140	0.060	1.569**
0.230	-0.005	0.090	0.066	0.090	0.149	0.110	0.161
0.400	0.022	0.120	0.130	0.120	0.131	0.250	0.024
0.490	0.014	0.200	-0.011	0.200	-0.019	0.400	-0.037
0.630	1.615**	0.260	0.115	0.250	0.074	0.490	-0.079
0.750	0.027	0.400	-4.887**	0.400	-0.005	0.580	-0.109
0.850	0.086	0.490	-0.017	0.490	-0.004	0.650	-0.029
0.900	0.107	0.580	0.004	0.580	-0.093	0.750	0.176
0.960	0.103	0.640	0.301	0.650	0.022	0.830	0.271
		0.750	0.126	0.750	0.252	0.900	0.351
		0.870	0.207	0.890	********	0.960	0.249
		0.930	0.187	0.930	0.243		
		0.960	0.118	0.960	-4.886**		
CN =	0.269		0.448		0.510		0.534

Table C-2. Continued.

Flight 198, Wing sweep = 26°, Time = 13-8-24-000, MINF = 0.600, Camber = 16/2, ALPT = 7.35, BETA = 0.57, QINF = 276.7, RNPU = 2.8E+06, CNWP = 0.3363

η = 0.93		0.76		0.59		0.40	
			Upper Surface				
x/c	CP	x/c	CP	x/c	CP	x/c	CP
0.020	0.654	0.000	-0.425	0.000	-7.984**	0.010	0.375**
0.060	-0.051	0.020	0.651**	0.020	0.559**	0.020	0.166**
0.110	-0.528	0.040	0.236	0.060	-1.396**	0.060	-0.845
0.200	-0.584	0.060	-0.273	0.090	-0.827	0.110	-1.305
0.230	-0.450	0.090	-0.699	0.110	-1.245	0.140	2.028**
0.400	-0.242	0.130	-1.197	0.130	-1.829	0.190	-7.840**
0.490	-0.217	0.150	-1.332	0.150	-0.929	0.250	-0.559
0.590	-0.225	0.200	-0.839	0.210	-0.780	0.400	-0.399
0.630	-0.223	0.250	-0.515	0.250	-0.561	0.490	-0.339
0.700	-0.240	0.260	-0.496	0.340	-0.466	0.580	-0.321
0.750	-0.201	0.280	-0.472	0.370	-0.444	0.650	-0.385
0.810	-0.206	0.290	-0.464	0.400	-0.399	0.700	-0.330
0.840	-0.220	0.310	-0.418	0.410	-0.383	0.750	-0.316
0.900	-0.121	0.320	-0.422	0.430	-0.413	0.800	-0.254
0.960	-0.036	0.340	-0.416	0.440	-0.395	0.830	-0.270
		0.350	-0.167**	0.460	-0.370	0.900	-0.140
		0.370	-0.385	0.490	-0.363	0.960	0.005
		0.380	-0.354	0.500	-0.349		
		0.400	-0.310	0.520	-0.340		
		0.410	-0.343	0.540	-0.338		
		0.430	-0.332	0.550	-0.316		
		0.440	-0.306	0.580	-0.290		
		0.460	-0.321	0.600	-0.333		
		0.470	-0.335	0.610	-0.245		
		0.490	-0.308	0.650	-4.887**		
		0.500	-0.297	0.700	-0.337		
		0.520	-0.299	0.750	-0.286		
		0.530	-0.286	0.820	-0.286		
		0.550	-0.285	0.890	-0.113		
		0.560	-0.307	0.900	-0.110		
		0.580	-0.262	0.960	-0.029		
		0.590	-0.297				
		0.600	-0.309				
		0.640	-4.713**				
		0.700	-0.290				
		0.750	-0.255				
		0.820	-4.901**				
		0.870	-0.194				
		0.930	-0.087				
		0.960	-0.024				
			Lower Surface				
0.020	-1.049	0.020	-0.557	0.020	-0.329	0.020	-0.574
0.110	-0.169	0.060	-0.106	0.060	0.141	0.060	1.579**
0.230	-0.025	0.090	0.006	0.090	0.155	0.110	0.162
0.400	0.046	0.120	0.106	0.120	0.131	0.250	0.028
0.490	0.001	0.200	-0.019	0.200	-0.027	0.400	-0.037
0.630	1.626**	0.260	0.107	0.250	0.074	0.490	-0.079
0.750	0.023	0.400	-4.920**	0.400	-0.021	0.580	-0.120
0.850	0.071	0.490	-0.013	0.490	-0.005	0.650	-0.030
0.900	0.101	0.580	0.007	0.580	-0.094	0.750	0.177
0.960	0.099	0.640	0.306	0.650	0.022	0.830	0.273
		0.750	0.127	0.750	0.234	0.900	0.346
		0.870	0.193	0.890	********	0.960	0.244
		0.930	0.184	0.930	0.229		
		0.960	0.111	0.960	-4.918**		
CN =	0.251		0.448		0.505		0.533

Table C-2. Continued.

Flight 198, Wing sweep = 26°, Time = 13-8-27-000, MINF = 0.598, Camber = 17/2, ALPT = 7.48, BETA = 0.50, QINF = 275.4, RNPU = 2.8E+06, CNWP = 0.3505

η = 0.93		0.76		0.59		0.40	
			Upper Surface				
x/c	CP	*x/c*	CP	*x/c*	CP	*x/c*	CP
0.020	0.692	0.000	-0.506	0.000	-8.024**	0.010	0.423**
0.060	-0.031	0.020	0.696**	0.020	0.605**	0.020	0.213**
0.110	-0.531	0.040	0.269	0.060	-1.403**	0.060	-0.826
0.200	-0.602	0.060	-0.258	0.090	-0.842	0.110	-1.312
0.230	-0.514	0.090	-0.703	0.110	-1.270	0.140	2.044**
0.400	-0.243	0.130	-1.254	0.130	-1.904	0.190	-7.879**
0.490	-0.222	0.150	-1.401	0.150	-0.943	0.250	-0.562
0.590	-0.226	0.200	-0.867	0.210	-0.810	0.400	-0.401
0.630	-0.224	0.250	-0.518	0.250	-0.572	0.490	-0.341
0.700	-0.241	0.260	-0.506	0.340	-0.469	0.580	-0.317
0.750	-0.202	0.280	-0.484	0.370	-0.464	0.650	-0.378
0.810	-0.207	0.290	-0.476	0.400	-0.417	0.700	-0.332
0.840	-0.213	0.310	-0.423	0.410	-0.393	0.750	-0.318
0.900	-0.128	0.320	-0.424	0.430	-0.416	0.800	-0.255
0.960	-0.036	0.340	-0.410	0.440	-0.408	0.830	-0.272
		0.350	-0.168**	0.460	-0.375	0.900	-0.141
		0.370	-0.391	0.490	-0.357	0.960	-0.004
		0.380	-0.361	0.500	-0.351		
		0.400	-0.312	0.520	-0.357		
		0.410	-0.349	0.540	-0.340		
		0.430	-0.334	0.550	-0.318		
		0.440	-0.328	0.580	-0.273		
		0.460	-0.351	0.600	-0.334		
		0.470	-0.288	0.610	-0.262		
		0.490	-0.310	0.650	-4.912**		
		0.500	-0.304	0.700	-0.327		
		0.520	-0.317	0.750	-0.284		
		0.530	-0.288	0.820	-0.283		
		0.550	-0.277	0.890	-0.129		
		0.560	-0.302	0.900	-0.105		
		0.580	-0.256	0.960	-0.033		
		0.590	-0.289				
		0.600	-0.301				
		0.640	-4.736**				
		0.700	-0.287				
		0.750	-0.249				
		0.820	-4.925**				
		0.870	-0.195				
		0.930	-0.084				
		0.960	-0.024				
			Lower Surface				
0.020	-1.044	0.020	-0.619	0.020	-0.399	0.020	-0.647
0.110	-0.192	0.060	-0.139	0.060	0.113	0.060	1.586**
0.230	-0.034	0.090	-0.007	0.090	0.166	0.110	0.195
0.400	0.062	0.120	0.062	0.120	0.136	0.250	0.035
0.490	0.001	0.200	-0.024	0.200	-0.035	0.400	-0.030
0.630	1.633**	0.260	0.108	0.250	0.082	0.490	-0.080
0.750	0.027	0.400	-4.944**	0.400	-0.021	0.580	-0.120
0.850	0.079	0.490	-0.001	0.490	-0.005	0.650	-0.026
0.900	0.095	0.580	0.015	0.580	-0.087	0.750	0.172
0.960	0.095	0.640	0.311	0.650	0.022	0.830	0.274
		0.750	0.127	0.750	0.235	0.900	0.332
		0.870	0.199	0.890	********	0.960	0.245
		0.930	0.180	0.930	0.230		
		0.960	0.107	0.960	-4.943**		
CN =	0.257		0.450		0.511		0.540

Table C-2. Continued.

Flight 198, Wing sweep = 26°, Time = 13-8-30-500, MINF = 0.597, Camber = 18/2, ALPT = 7.48, BETA = 0.50, QINF = 274.2, RNPU = 2.8E+06, CNWP = 0.3529

η = 0.93		0.76		0.59		0.40	
			Upper Surface				
x/c	CP	*x/c*	CP	*x/c*	CP	*x/c*	CP
0.020	0.710	0.000	-0.678	0.000	-8.059**	0.010	0.492**
0.060	-0.003	0.020	0.740**	0.020	0.657**	0.020	0.304**
0.110	-0.547	0.040	0.300	0.060	-1.327**	0.060	-0.785
0.200	-0.627	0.060	-0.210	0.090	-0.825	0.110	-1.319
0.230	-0.477	0.090	-0.702	0.110	-1.297	0.140	2.044**
0.400	-0.254	0.130	-1.305	0.130	-1.967	0.190	-7.914**
0.490	-0.213	0.150	-1.498	0.150	-0.967	0.250	-0.567
0.590	-0.225	0.200	-0.885	0.210	-0.805	0.400	-0.404
0.630	-0.227	0.250	-0.536	0.250	-0.577	0.490	-0.344
0.700	-0.244	0.260	-0.517	0.340	-0.472	0.580	-0.321
0.750	-0.209	0.280	-0.498	0.370	-0.467	0.650	-0.382
0.810	-0.219	0.290	-0.480	0.400	-0.413	0.700	-0.324
0.840	-0.224	0.310	-0.434	0.410	-0.388	0.750	-0.313
0.900	-0.130	0.320	-0.433	0.430	-0.419	0.800	-0.254
0.960	-0.038	0.340	-0.430	0.440	-0.401	0.830	-0.265
		0.350	-0.176**	0.460	-0.372	0.900	-0.134
		0.370	-0.394	0.490	-0.320	0.960	-0.002
		0.380	-0.369	0.500	-0.355		
		0.400	-0.315	0.520	-0.361		
		0.410	-0.352	0.540	-0.344		
		0.430	-0.337	0.550	-0.321		
		0.440	-0.327	0.580	-0.295		
		0.460	-0.335	0.600	-0.338		
		0.470	-0.348	0.610	-0.265		
		0.490	-0.313	0.650	-4.934**		
		0.500	-0.307	0.700	-0.338		
		0.520	-0.303	0.750	-0.287		
		0.530	-0.294	0.820	-0.295		
		0.550	-0.290	0.890	-0.127		
		0.560	-0.312	0.900	-0.107		
		0.580	-0.259	0.960	-0.031		
		0.590	-0.297				
		0.600	-0.283				
		0.640	-4.758**				
		0.700	-0.290				
		0.750	-0.256				
		0.820	-4.948**				
		0.870	-0.198				
		0.930	-0.090				
		0.960	-0.026				
			Lower Surface				
0.020	-0.931	0.020	-0.642	0.020	-0.540	0.020	-0.757
0.110	-0.231	0.060	-0.153	0.060	0.053	0.060	1.591**
0.230	-0.052	0.090	-0.048	0.090	0.165	0.110	0.205
0.400	0.048	0.120	0.028	0.120	0.153	0.250	0.040
0.490	0.007	0.200	-0.034	0.200	-0.044	0.400	-0.024
0.630	1.638**	0.260	0.086	0.250	0.092	0.490	-0.074
0.750	0.025	0.400	-4.967**	0.400	-0.001	0.580	-0.123
0.850	0.069	0.490	0.005	0.490	-0.007	0.650	-0.028
0.900	0.088	0.580	0.021	0.580	-0.089	0.750	0.171
0.960	0.089	0.640	0.307	0.650	0.028	0.830	0.264
		0.750	0.126	0.750	0.234	0.900	0.328
		0.870	0.208	0.890	********	0.960	0.244
		0.930	0.175	0.930	0.220		
		0.960	0.106	0.960	-4.965**		
CN =	0.248		0.452		0.515		0.543

Table C-2. Continued.

Flight 198, Wing sweep = 26°, Time = 13-8-33-000, MINF = 0.595, Camber = 19/2, ALPT = 7.55, BETA = 0.57, QINF = 272.9, RNPU = 2.8E+06, CNWP = 0.3394

η = 0.93		0.76		0.59		0.40	
			Upper Surface				
x/c	CP	*x/c*	CP	*x/c*	CP	*x/c*	CP
0.020	0.722	0.000	-0.690	0.000	-8.100**	0.010	0.540**
0.060	0.007	0.020	0.828**	0.020	0.678**	0.020	0.329**
0.110	-0.550	0.040	0.337	0.060	-1.327**	0.060	-0.790
0.200	-0.638	0.060	-0.196	0.090	-0.841	0.110	-1.326
0.230	-0.459	0.090	-0.721	0.110	-1.323	0.140	2.061**
0.400	-0.248	0.130	-1.334	0.130	-2.017	0.190	-7.954**
0.490	-0.222	0.150	-1.538	0.150	-1.008	0.250	-0.570
0.590	-0.239	0.200	-0.914	0.210	-0.815	0.400	-0.407
0.630	-0.233	0.250	-0.553	0.250	-0.580	0.490	-0.346
0.700	-0.241	0.260	-0.520	0.340	-0.475	0.580	-0.322
0.750	-0.210	0.280	-0.485	0.370	-0.461	0.650	-0.384
0.810	-0.203	0.290	-0.492	0.400	-0.423	0.700	-0.325
0.840	-0.217	0.310	-0.440	0.410	-0.390	0.750	-0.315
0.900	-0.120	0.320	-0.440	0.430	-0.422	0.800	-0.252
0.960	-0.039	0.340	-0.436	0.440	-0.403	0.830	-0.266
		0.350	-0.161**	0.460	-0.380	0.900	-0.124
		0.370	-0.396	0.490	-0.362	0.960	-0.006
		0.380	-0.362	0.500	-0.336		
		0.400	-0.329	0.520	-0.363		
		0.410	-0.358	0.540	-0.345		
		0.430	-0.339	0.550	-0.323		
		0.440	-0.343	0.580	-0.278		
		0.460	-0.344	0.600	-0.340		
		0.470	-0.357	0.610	-0.266		
		0.490	-0.315	0.650	-4.959**		
		0.500	-0.315	0.700	-0.340		
		0.520	-0.305	0.750	-0.288		
		0.530	-0.292	0.820	-0.288		
		0.550	-0.292	0.890	-0.128		
		0.560	-0.300	0.900	-0.102		
		0.580	-0.261	0.960	-0.027		
		0.590	-0.303				
		0.600	-0.311				
		0.640	-4.782**				
		0.700	-0.292				
		0.750	-0.257				
		0.820	-4.973**				
		0.870	-0.195				
		0.930	-0.082				
		0.960	-0.030				
			Lower Surface				
0.020	-0.926	0.020	-0.460	0.020	-0.577	0.020	-0.739
0.110	-0.276	0.060	-0.227	0.060	0.010	0.060	1.599**
0.230	-0.049	0.090	-0.133	0.090	0.160	0.110	0.229
0.400	0.056	0.120	-0.022	0.120	0.154	0.250	0.048
0.490	0.023	0.200	-0.038	0.200	-0.052	0.400	-0.024
0.630	1.646**	0.260	0.090	0.250	0.105	0.490	-0.075
0.750	0.034	0.400	-4.992**	0.400	-0.012	0.580	-0.112
0.850	0.074	0.490	0.005	0.490	-0.007	0.650	-0.033
0.900	0.094	0.580	0.029	0.580	-0.090	0.750	0.171
0.960	0.094	0.640	0.315	0.650	0.028	0.830	0.274
		0.750	0.126	0.750	0.235	0.900	0.342
		0.870	0.199	0.890	********	0.960	0.238
		0.930	0.180	0.930	0.230		
		0.960	0.102	0.960	-4.990**		
CN =	0.247		0.450		0.517		0.551

Table C-2. Continued.

Flight 198, Wing sweep = 26°, Time = 13-8-36-500, MINF = 0.593, Camber = 19/2, ALPT = 7.55, BETA = 0.55, QINF = 271.3, RNPU = 2.8E+06, CNWP = 0.3568

η = 0.93		0.76		0.59		0.40	
			Upper Surface				
x/c	CP	*x/c*	CP	*x/c*	CP	*x/c*	CP
0.020	0.726	0.000	-0.686	0.000	-8.147**	0.010	0.543**
0.060	0.007	0.020	0.769**	0.020	0.682**	0.020	0.330**
0.110	-0.566	0.040	0.335	0.060	-1.342**	0.060	-0.771
0.200	-0.642	0.060	-0.213	0.090	-0.823	0.110	-1.334
0.230	-0.493	0.090	-0.726	0.110	-1.331	0.140	2.059**
0.400	-0.241	0.130	-1.357	0.130	-2.042	0.190	-8.001**
0.490	-0.216	0.150	-1.538	0.150	-1.005	0.250	-0.558
0.590	-0.232	0.200	-0.919	0.210	-0.825	0.400	-0.401
0.630	-0.230	0.250	-0.542	0.250	-0.583	0.490	-0.349
0.700	-0.247	0.260	-0.516	0.340	-0.478	0.580	-0.324
0.750	-0.207	0.280	-0.514	0.370	-0.464	0.650	-0.377
0.810	-0.213	0.290	-0.486	0.400	-0.418	0.700	-0.328
0.840	-0.210	0.310	-0.443	0.410	-0.384	0.750	-0.317
0.900	-0.132	0.320	-0.443	0.430	-0.407	0.800	-0.254
0.960	-0.039	0.340	-0.435	0.440	-0.405	0.830	-0.258
		0.350	-0.178**	0.460	-0.380	0.900	-0.125
		0.370	-0.399	0.490	-0.340	0.960	-0.007
		0.380	-0.374	0.500	-0.359		
		0.400	-0.319	0.520	-0.365		
		0.410	-0.356	0.540	-0.348		
		0.430	-0.341	0.550	-0.325		
		0.440	-0.332	0.580	-0.289		
		0.460	-0.333	0.600	-0.326		
		0.470	-0.359	0.610	-0.260		
		0.490	-0.317	0.650	-4.988**		
		0.500	-0.311	0.700	-0.335		
		0.520	-0.307	0.750	-0.286		
		0.530	-0.294	0.820	-0.269		
		0.550	-0.294	0.890	-0.124		
		0.560	-0.309	0.900	-0.103		
		0.580	-0.270	0.960	-0.032		
		0.590	-0.301				
		0.600	-0.297				
		0.640	-4.810**				
		0.700	-0.294				
		0.750	-0.259				
		0.820	-5.002**				
		0.870	-0.196				
		0.930	-0.087				
		0.960	-0.031				
			Lower Surface				
0.020	-0.912	0.020	-0.429	0.020	-0.529	0.020	-0.723
0.110	-0.256	0.060	-0.237	0.060	0.010	0.060	1.608**
0.230	-0.053	0.090	-0.147	0.090	0.150	0.110	0.252
0.400	0.060	0.120	-0.014	0.120	0.135	0.250	0.048
0.490	0.015	0.200	-0.038	0.200	-0.052	0.400	-0.016
0.630	1.656**	0.260	0.091	0.250	0.105	0.490	-0.075
0.750	0.033	0.400	-5.021**	0.400	-0.002	0.580	-0.113
0.850	0.082	0.490	0.009	0.490	-0.007	0.650	-0.029
0.900	0.101	0.580	0.033	0.580	-0.082	0.750	0.172
0.960	0.094	0.640	0.317	0.650	0.031	0.830	0.266
		0.750	0.117	0.750	0.252	0.900	0.328
		0.870	0.190	0.890	********	0.960	0.246
		0.930	0.177	0.930	0.222		
		0.960	0.102	0.960	-5.020**		
CN =	0.251		0.450		0.519		0.553

Table C-2. Continued.

Flight 216, Wing sweep = 26°, Time = 8-52-1-000, MINF = 0.604, Camber = 5/6, ALPT = 4.99, BETA = 0.37, QINF = 306.2, RNPU = 3.1E+06, CNWP = 0.2850

η = 0.93		0.76		0.59		0.40	
			Upper Surface				
x/c	CP	*x/c*	CP	*x/c*	CP	*x/c*	CP
0.020	0.126	0.000	0.709	0.000	0.753**	0.010	-0.646
0.060	-0.160	0.020	-0.049	0.020	-0.202	0.020	-0.483
0.110	-0.350	0.040	-0.138	0.060	-0.332**	0.060	-0.689
0.200	-0.328	0.060	-0.397	0.090	-0.574	0.110	-0.762
0.230	-0.341	0.090	-0.449	0.110	-0.623	0.140	-0.666
0.400	-0.241	0.130	-0.565	0.130	-3.919**	0.190	-3.919**
0.490	-0.241	0.150	-0.572	0.150	-0.562	0.250	-0.477
0.590	-0.306	0.200	-0.505	0.210	-0.530	0.400	-0.414
0.630	-0.328	0.250	-0.378	0.250	-0.468	0.490	-0.357
0.700	-0.393	0.260	-0.396	0.340	-0.446	0.580	-0.352
0.750	-0.457	0.280	-0.402	0.370	-0.424	0.650	-0.473
0.810	-0.414	0.290	-0.393	0.400	-0.382	0.700	-0.429
0.840	-0.460	0.310	-0.361	0.410	0.491**	0.750	-0.491
0.900	-0.248	0.320	-0.393	0.430	-0.404	0.800	-0.507
0.960	-0.085	0.340	-0.365	0.440	-0.390	0.830	-0.518
		0.350	-0.144**	0.460	-0.399	0.900	-0.240
		0.370	-0.358	0.490	-0.376	0.960	-0.043
		0.380	-0.371	0.500	-0.387		
		0.400	-0.349	0.520	-0.420		
		0.410	-0.347	0.540	-0.409		
		0.430	-0.330	0.550	-0.375		
		0.440	-0.337	0.580	-0.368		
		0.460	-0.349	0.600	-0.407		
		0.470	-0.383	0.610	-0.408		
		0.490	-0.374	0.650	-0.576		
		0.500	-0.363	0.700	-0.499		
		0.520	-0.337	0.750	-0.484		
		0.530	-0.367	0.820	-0.542		
		0.550	-0.385	0.890	-0.237		
		0.560	-0.406	0.900	-0.173		
		0.580	-0.352	0.960	-0.027		
		0.590	-0.418				
		0.600	-0.389				
		0.640	-0.488				
		0.700	-0.509				
		0.750	-0.036**				
		0.820	-0.515				
		0.870	-0.393				
		0.930	-0.190				
		0.960	-0.107				
			Lower Surface				
0.020	-0.361	0.020	-0.276	0.020	-0.161	0.020	0.074
0.110	-0.131	0.060	-0.029	0.060	0.016	0.060	0.000
0.230	-0.008	0.090	-0.022	0.090	0.000	0.110	0.021
0.400	-0.021	0.120	-0.039	0.120	-0.058	0.250	-0.117
0.490	0.009	0.200	0.001	0.200	0.028	0.400	-0.108
0.630	1.887**	0.260	-0.009	0.250	-0.068	0.490	-0.091
0.750	0.078	0.400	-0.015	0.400	-0.070	0.580	-0.089
0.850	0.127	0.490	-0.032	0.490	-0.056	0.650	0.030
0.900	0.223	0.580	-0.012	0.580	-0.063	0.750	0.229
0.960	0.145	0.640	0.147	0.650	-0.055	0.830	0.321
		0.750	0.223	0.750	0.009	0.900	0.372
		0.870	0.326	0.890	0.390	0.960	0.269
		0.930	0.246	0.930	0.299		
		0.960	0.193	0.960	0.289		
CN =	0.313		0.464		0.437		0.477

Table C-2. Continued.

Flight 216, Wing sweep = 26°, Time = 8-52-52-000, MINF = 0.601, Camber = 5/6, ALPT = 7.92, BETA = 0.17, QINF = 292.7, RNPU = 3.0E+06, CNWP = 0.3783

η = 0.93		0.76		0.59		0.40	
			Upper Surface				
x/c	CP	*x/c*	CP	*x/c*	CP	*x/c*	CP
0.020	-0.439	0.000	0.727	0.000	0.539**	0.010	-1.957
0.060	-0.509	0.020	-0.861	0.020	-1.116	0.020	-1.100
0.110	-0.602	0.040	-0.700	0.060	-0.738**	0.060	-1.267
0.200	-0.514	0.060	-0.915	0.090	-1.019	0.110	-1.155
0.230	-0.493	0.090	-0.861	0.110	-1.065	0.140	-0.961
0.400	-0.342	0.130	-0.941	0.130	-3.957**	0.190	-3.957**
0.490	-0.314	0.150	-0.912	0.150	-0.862	0.250	-0.633
0.590	-0.371	0.200	-0.759	0.210	-0.791	0.400	-0.516
0.630	-0.397	0.250	-0.581	0.250	-0.651	0.490	-0.426
0.700	-0.471	0.260	-0.573	0.340	-0.565	0.580	-0.417
0.750	-0.544	0.280	-0.556	0.370	-0.562	0.650	-0.501
0.810	-0.490	0.290	-0.529	0.400	-0.489	0.700	-0.467
0.840	-0.540	0.310	-0.512	0.410	0.656**	0.750	-0.511
0.900	-0.330	0.320	-0.532	0.430	-0.513	0.800	-0.449
0.960	-0.151	0.340	-0.504	0.440	-0.494	0.830	-0.457
		0.350	-0.168**	0.460	-0.492	0.900	-0.190
		0.370	-0.485	0.490	-0.468	0.960	-0.062
		0.380	-0.505	0.500	-0.482		
		0.400	-0.453	0.520	-0.493		
		0.410	-0.459	0.540	-0.473		
		0.430	-0.440	0.550	-0.457		
		0.440	-0.428	0.580	-0.447		
		0.460	-0.438	0.600	-0.490		
		0.470	-0.436	0.610	-0.486		
		0.490	-0.451	0.650	-0.653		
		0.500	-0.444	0.700	-0.546		
		0.520	-0.430	0.750	-0.542		
		0.530	-0.439	0.820	-0.566		
		0.550	-0.467	0.890	-0.211		
		0.560	-0.476	0.900	-0.166		
		0.580	-0.426	0.960	-0.015		
		0.590	-0.485				
		0.600	-0.458				
		0.640	-0.544				
		0.700	-0.564				
		0.750	-0.043**				
		0.820	-0.549				
		0.870	-0.401				
		0.930	-0.189				
		0.960	-0.117				
			Lower Surface				
0.020	0.023	0.020	0.198	0.020	0.302	0.020	0.517
0.110	0.010	0.060	0.229	0.060	0.270	0.060	0.025
0.230	0.089	0.090	0.178	0.090	0.223	0.110	0.254
0.400	0.040	0.120	0.122	0.120	0.130	0.250	0.020
0.490	0.041	0.200	0.089	0.200	0.108	0.400	-0.002
0.630	2.116**	0.260	0.089	0.250	0.065	0.490	-0.001
0.750	0.070	0.400	0.048	0.400	0.022	0.580	-0.022
0.850	0.091	0.490	0.026	0.490	-0.041	0.650	0.072
0.900	0.188	0.580	0.021	0.580	0.003	0.750	0.273
0.960	0.112	0.640	0.179	0.650	-0.047	0.830	0.352
		0.750	0.241	0.750	0.019	0.900	0.395
		0.870	0.323	0.890	0.388	0.960	0.276
		0.930	0.263	0.930	0.307		
		0.960	0.181	0.960	0.258		
CN =	0.470		0.677		0.630		0.679

Table C-2. Continued.

Flight 216, Wing sweep = 26°, Time = 8-54-30-000, MINF = 0.600, Camber = 5/6, ALPT = 9.99, BETA = -0.10, QINF = 300.2, RNPU = 3.1E+06, CNWP = 0.4014

η = 0.93		0.76		0.59		0.40	
			Upper Surface				
x/c	CP	*x/c*	CP	*x/c*	CP	*x/c*	CP
0.020	-0.929	0.000	0.336	0.000	0.306**	0.010	-2.366
0.060	-0.764	0.020	-1.999	0.020	-2.305	0.020	-2.393
0.110	-0.761	0.040	-0.030	0.060	-1.038**	0.060	-1.391
0.200	-0.607	0.060	-1.292	0.090	-1.315	0.110	-1.230
0.230	-0.550	0.090	-1.143	0.110	-1.326	0.140	-1.046
0.400	-0.388	0.130	-1.185	0.130	-3.969**	0.190	-3.969**
0.490	-0.354	0.150	-1.099	0.150	-1.001	0.250	-0.655
0.590	-0.417	0.200	-0.901	0.210	-0.906	0.400	-0.527
0.630	-0.439	0.250	-0.673	0.250	-0.726	0.490	-0.421
0.700	-0.517	0.260	-0.655	0.340	-0.623	0.580	-0.401
0.750	-0.599	0.280	-0.640	0.370	-0.594	0.650	-0.446
0.810	-0.545	0.290	-0.606	0.400	-0.503	0.700	-0.433
0.840	-0.606	0.310	-0.572	0.410	0.528**	0.750	-0.444
0.900	-0.387	0.320	-0.592	0.430	-0.557	0.800	-0.398
0.960	-0.197	0.340	-0.561	0.440	-0.531	0.830	-0.345
		0.350	-0.158**	0.460	-0.508	0.900	-0.212
		0.370	-0.532	0.490	-0.484	0.960	-0.141
		0.380	-0.548	0.500	-0.475		
		0.400	-0.497	0.520	-0.498		
		0.410	-0.502	0.540	-0.483		
		0.430	-0.466	0.550	-0.463		
		0.440	-0.462	0.580	-0.456		
		0.460	-0.466	0.600	-0.481		
		0.470	-0.496	0.610	-0.469		
		0.490	-0.475	0.650	-0.667		
		0.500	-0.477	0.700	-0.522		
		0.520	-0.463	0.750	-0.511		
		0.530	-0.460	0.820	-0.486		
		0.550	-0.486	0.890	-0.122		
		0.560	-0.494	0.900	-0.103		
		0.580	-0.450	0.960	-0.010		
		0.590	-0.511				
		0.600	-0.473				
		0.640	-0.554				
		0.700	-0.573				
		0.750	-0.013**				
		0.820	-0.544				
		0.870	-0.385				
		0.930	-0.182				
		0.960	-0.108				
			Lower Surface				
0.020	0.267	0.020	0.470	0.020	0.529	0.020	0.694
0.110	0.105	0.060	0.379	0.060	0.427	0.060	0.057
0.230	0.165	0.090	0.296	0.090	0.354	0.110	0.361
0.400	0.057	0.120	0.235	0.120	0.253	0.250	0.117
0.490	0.080	0.200	0.166	0.200	0.191	0.400	0.074
0.630	1.952**	0.260	0.176	0.250	0.162	0.490	0.061
0.750	0.086	0.400	0.110	0.400	0.093	0.580	0.031
0.850	0.095	0.490	0.080	0.490	-0.008	0.650	0.114
0.900	0.185	0.580	0.060	0.580	0.050	0.750	0.289
0.960	0.104	0.640	0.214	0.650	-0.014	0.830	0.358
		0.750	0.259	0.750	0.036	0.900	0.399
		0.870	0.333	0.890	0.404	0.960	0.254
		0.930	0.271	0.930	0.317		
		0.960	0.191	0.960	0.224		
CN =	0.574		0.803		0.722		0.776

Table C-2. Continued.

Flight 216, Wing sweep = 26°, Time = 8-56-49-500, MINF = 0.601, Camber = 20/18, ALPT = 2.98, BETA = 0.89, QINF = 302.0, RNPU = 3.1E+06, CNWP = 0.2761

η = 0.93		0.76		0.59		0.40	
			Upper Surface				
x/c	CP	*x/c*	CP	*x/c*	CP	*x/c*	CP
0.020	0.755	0.000	-1.098	0.000	-0.166**	0.010	0.801
0.060	0.186	0.020	0.837	0.020	0.812	0.020	0.651
0.110	-0.364	0.040	0.624	0.060	0.208**	0.060	-0.170
0.200	-0.519	0.060	0.077	0.090	-0.450	0.110	-1.140
0.230	-0.435	0.090	-0.401	0.110	-0.875	0.140	-0.828
0.400	-0.301	0.130	-0.907	0.130	-3.956**	0.190	-3.956**
0.490	-0.296	0.150	-1.122	0.150	-0.773	0.250	-0.482
0.590	-0.399	0.200	-0.735	0.210	-0.627	0.400	-0.438
0.630	-0.452	0.250	-0.483	0.250	-0.501	0.490	-0.406
0.700	-0.656	0.260	-0.481	0.340	-0.479	0.580	-0.462
0.750	-0.683	0.280	-0.456	0.370	-0.480	0.650	-0.638
0.810	-0.666	0.290	-0.448	0.400	-0.429	0.700	-0.617
0.840	-0.743	0.310	-0.431	0.410	0.515**	0.750	-0.883
0.900	-0.243	0.320	-0.457	0.430	-0.473	0.800	-0.960
0.960	-0.252	0.340	-0.436	0.440	-0.469	0.830	-0.820
		0.350	-0.226**	0.460	-0.470	0.900	-0.398
		0.370	-0.433	0.490	-0.460	0.960	-0.427
		0.380	-0.452	0.500	-0.479		
		0.400	-0.416	0.520	-0.515		
		0.410	-0.425	0.540	-0.500		
		0.430	-0.401	0.550	-0.489		
		0.440	-0.406	0.580	-0.506		
		0.460	-0.422	0.600	-0.543		
		0.470	-0.450	0.610	-0.559		
		0.490	-0.447	0.650	-0.812		
		0.500	-0.457	0.700	-0.729		
		0.520	-0.430	0.750	-0.777		
		0.530	-0.457	0.820	-0.586		
		0.550	-0.492	0.890	-0.369		
		0.560	-0.507	0.900	-0.376		
		0.580	-0.467	0.960	-0.367		
		0.590	-0.531				
		0.600	-0.513				
		0.640	-0.688				
		0.700	-0.775				
		0.750	-0.123**				
		0.820	-0.673				
		0.870	-0.515				
		0.930	-0.326				
		0.960	-0.324				
			Lower Surface				
0.020	-0.234	0.020	-0.396	0.020	-0.470	0.020	-1.334
0.110	-0.176	0.060	-0.381	0.060	-0.524	0.060	0.003
0.230	-0.088	0.090	-0.398	0.090	-0.591	0.110	-0.197
0.400	-0.134	0.120	-0.383	0.120	-0.608	0.250	-0.044
0.490	-0.062	0.200	-0.090	0.200	-0.070	0.400	-0.016
0.630	1.930**	0.260	-0.297	0.250	-0.102	0.490	0.022
0.750	-0.006	0.400	-0.030	0.400	0.123	0.580	0.102
0.850	0.022	0.490	0.083	0.490	-0.061	0.650	0.278
0.900	0.088	0.580	0.175	0.580	0.184	0.750	0.480
0.960	0.075	0.640	0.328	0.650	-0.127	0.830	0.513
		0.750	0.343	0.750	-0.003	0.900	0.553
		0.870	0.443	0.890	0.549	0.960	0.381
		0.930	0.401	0.930	0.446		
		0.960	0.275	0.960	0.347		
CN =	0.321		0.551		0.520		0.664

Table C-2. Continued.

Flight 216, Wing sweep = 26°, Time = 8-56-59-500, MINF = 0.598, Camber = 20/18, ALPT = 3.04, BETA = 0.74, QINF = 299.1, RNPU = 3.1E+06, CNWP = 0.2625

η = 0.93		0.76		0.59		0.40	
			Upper Surface				
x/c	CP	*x/c*	CP	*x/c*	CP	*x/c*	CP
0.020	0.752	0.000	-1.090	0.000	-0.212**	0.010	0.800
0.060	0.195	0.020	0.824	0.020	0.818	0.020	0.649
0.110	-0.381	0.040	0.616	0.060	0.200**	0.060	-0.173
0.200	-0.526	0.060	0.075	0.090	-0.446	0.110	-1.153
0.230	-0.460	0.090	-0.407	0.110	-0.886	0.140	-0.838
0.400	-0.306	0.130	-0.924	0.130	-3.996**	0.190	-3.996**
0.490	-0.305	0.150	-1.127	0.150	-0.799	0.250	-0.488
0.590	-0.397	0.200	-0.749	0.210	-0.630	0.400	-0.445
0.630	-0.454	0.250	-0.490	0.250	-0.493	0.490	-0.417
0.700	-0.668	0.260	-0.481	0.340	-0.486	0.580	-0.468
0.750	-0.758	0.280	-0.472	0.370	-0.472	0.650	-0.646
0.810	-0.675	0.290	-0.458	0.400	-0.435	0.700	-0.611
0.840	-0.753	0.310	-0.434	0.410	0.518**	0.750	-0.890
0.900	-0.265	0.320	-0.459	0.430	-0.480	0.800	-0.965
0.960	-0.264	0.340	-0.442	0.440	-0.475	0.830	-0.812
		0.350	-0.230**	0.460	-0.457	0.900	-0.403
		0.370	-0.436	0.490	-0.459	0.960	-0.417
		0.380	-0.458	0.500	-0.495		
		0.400	-0.408	0.520	-0.505		
		0.410	-0.428	0.540	-0.486		
		0.430	-0.407	0.550	-0.483		
		0.440	-0.412	0.580	-0.478		
		0.460	-0.416	0.600	-0.536		
		0.470	-0.456	0.610	-0.553		
		0.490	-0.453	0.650	-0.780		
		0.500	-0.452	0.700	-0.705		
		0.520	-0.436	0.750	-0.776		
		0.530	-0.460	0.820	-0.589		
		0.550	-0.498	0.890	-0.347		
		0.560	-0.502	0.900	-0.361		
		0.580	-0.467	0.960	-0.352		
		0.590	-0.533				
		0.600	-0.515				
		0.640	-0.687				
		0.700	-0.777				
		0.750	-0.123**				
		0.820	-0.689				
		0.870	-0.416				
		0.930	-0.323				
		0.960	-0.330				
			Lower Surface				
0.020	-0.219	0.020	-0.370	0.020	-0.492	0.020	-1.388
0.110	-0.187	0.060	-0.349	0.060	-0.518	0.060	0.001
0.230	-0.091	0.090	-0.407	0.090	-0.594	0.110	-0.180
0.400	-0.141	0.120	-0.382	0.120	-0.582	0.250	-0.040
0.490	-0.087	0.200	-0.090	0.200	-0.066	0.400	-0.004
0.630	1.946**	0.260	-0.298	0.250	-0.076	0.490	0.028
0.750	0.011	0.400	-0.017	0.400	0.117	0.580	0.110
0.850	0.047	0.490	0.105	0.490	-0.063	0.650	0.279
0.900	0.120	0.580	0.182	0.580	0.177	0.750	0.483
0.960	0.086	0.640	0.303	0.650	-0.134	0.830	0.522
		0.750	0.336	0.750	-0.001	0.900	0.570
		0.870	0.435	0.890	0.545	0.960	0.388
		0.930	0.377	0.930	0.433		
		0.960	0.250	0.960	0.341		
CN =	0.333		0.551		0.519		0.676

Table C-2. Continued.

Flight 216, Wing sweep = 26°, Time = 9-29-19-500, MINF = 0.596, Camber = 10/18, ALPT = 13.33, BETA = -0.41, QINF = 291.8, RNPU = 3.0E+06, CNWP = 0.7196

η = 0.93		0.76		0.59		0.40	
			Upper Surface				
x/c	CP	*x/c*	CP	*x/c*	CP	*x/c*	CP
0.020	-1.193	0.000	0.048	0.000	0.297**	0.010	-2.402
0.060	-1.356	0.020	-2.317	0.020	-2.429	0.020	-2.408
0.110	-1.295	0.040	0.017	0.060	-1.404**	0.060	-2.115
0.200	-1.021	0.060	-1.759	0.090	-2.231	0.110	-1.515
0.230	-0.841	0.090	-2.091	0.110	-2.292	0.140	-1.300
0.400	-0.626	0.130	-1.632	0.130	-4.021**	0.190	-4.021**
0.490	-0.588	0.150	-1.756	0.150	-1.515	0.250	-0.742
0.590	-0.704	0.200	-1.640	0.210	-1.490	0.400	-0.595
0.630	-0.771	0.250	-1.182	0.250	-1.225	0.490	-0.472
0.700	-0.960	0.260	-1.073	0.340	-0.872	0.580	-0.493
0.750	-0.899	0.280	-1.002	0.370	-0.796	0.650	-0.505
0.810	-0.881	0.290	-0.904	0.400	-0.659	0.700	-0.519
0.840	-1.007	0.310	-0.822	0.410	0.606**	0.750	-0.596
0.900	-0.605	0.320	-0.832	0.430	-0.695	0.800	-0.591
0.960	-0.647	0.340	-0.782	0.440	-0.673	0.830	-0.574
		0.350	-0.282**	0.460	-0.635	0.900	-0.513
		0.370	-0.729	0.490	-0.590	0.960	-0.495
		0.380	-0.752	0.500	-0.591		
		0.400	-0.295	0.520	-0.619		
		0.410	-0.686	0.540	-0.590		
		0.430	-0.660	0.550	-0.567		
		0.440	-0.641	0.580	-0.580		
		0.460	-0.654	0.600	-0.596		
		0.470	-0.671	0.610	-0.588		
		0.490	-0.663	0.650	-0.735		
		0.500	-0.654	0.700	-0.659		
		0.520	-0.621	0.750	-0.679		
		0.530	-0.644	0.820	-0.648		
		0.550	-0.673	0.890	-0.463		
		0.560	-0.698	0.900	-0.465		
		0.580	-0.641	0.960	-0.419		
		0.590	-0.703				
		0.600	-0.666				
		0.640	-0.773				
		0.700	-0.845				
		0.750	-0.040**				
		0.820	-0.593				
		0.870	-0.355				
		0.930	-0.337				
		0.960	-0.323				
			Lower Surface				
0.020	0.425	0.020	0.602	0.020	0.649	0.020	0.721
0.110	0.260	0.060	0.543	0.060	0.596	0.060	0.091
0.230	0.140	0.090	0.493	0.090	0.519	0.110	0.522
0.400	0.164	0.120	0.433	0.120	0.466	0.250	0.306
0.490	0.195	0.200	0.159	0.200	0.189	0.400	0.258
0.630	2.467**	0.260	0.377	0.250	0.346	0.490	0.263
0.750	0.250	0.400	0.285	0.400	0.285	0.580	0.255
0.850	0.232	0.490	0.268	0.490	0.047	0.650	0.380
0.900	0.285	0.580	0.291	0.580	0.286	0.750	0.580
0.960	0.076	0.640	0.450	0.650	-0.047	0.830	0.598
		0.750	0.449	0.750	0.070	0.900	0.629
		0.870	0.523	0.890	0.626	0.960	0.412
		0.930	0.416	0.930	0.518		
		0.960	0.289	0.960	0.283		
CN =	1.003		1.241		1.146		1.136

Table C-2. Continued.

Flight 216, Wing sweep = 26°, Time = 9-30-29-500, MINF = 0.603, Camber = 10/15, ALPT = 2.04, BETA = 0.14, QINF = 303.3, RNPU = 3.1E+06, CNWP = 0.3392

η = 0.93		0.76		0.59		0.40	
			Upper Surface				
x/c	CP	*x/c*	CP	*x/c*	CP	*x/c*	CP
0.020	0.591	0.000	-0.382	0.000	0.457**	0.010	0.407
0.060	0.095	0.020	0.603	0.020	0.545	0.020	0.249
0.110	-0.224	0.040	0.368	0.060	-0.111**	0.060	-0.301
0.200	-0.330	0.060	-0.018	0.090	-0.342	0.110	-0.638
0.230	-0.325	0.090	-0.268	0.110	-0.520	0.140	-0.597
0.400	-0.264	0.130	-0.497	0.130	-3.926**	0.190	-3.926**
0.490	-0.267	0.150	-0.596	0.150	-0.516	0.250	-0.419
0.590	-0.384	0.200	-0.486	0.210	-0.460	0.400	-0.396
0.630	-0.430	0.250	-0.356	0.250	-0.407	0.490	-0.373
0.700	-0.622	0.260	-0.365	0.340	-0.405	0.580	-0.441
0.750	-0.840	0.280	-0.360	0.370	-0.403	0.650	-0.627
0.810	-0.771	0.290	-0.356	0.400	-0.377	0.700	-0.592
0.840	-0.851	0.310	-0.344	0.410	0.525**	0.750	-0.860
0.900	-0.252	0.320	-0.368	0.430	-0.421	0.800	-0.971
0.960	-0.221	0.340	-0.354	0.440	-0.424	0.830	-0.822
		0.350	-0.160**	0.460	-0.417	0.900	-0.383
		0.370	-0.361	0.490	-0.423	0.960	-0.412
		0.380	-0.378	0.500	-0.436		
		0.400	-0.326	0.520	-0.450		
		0.410	-0.359	0.540	-0.465		
		0.430	-0.367	0.550	-0.438		
		0.440	-0.346	0.580	-0.457		
		0.460	-0.360	0.600	-0.505		
		0.470	-0.397	0.610	-0.531		
		0.490	-0.397	0.650	-0.671		
		0.500	-0.404	0.700	-0.677		
		0.520	-0.362	0.750	-0.757		
		0.530	-0.411	0.820	-0.583		
		0.550	-0.441	0.890	-0.349		
		0.560	-0.450	0.900	-0.367		
		0.580	-0.426	0.960	-0.346		
		0.590	-0.489				
		0.600	-0.455				
		0.640	-0.657				
		0.700	-0.748				
		0.750	-0.092**				
		0.820	-0.594				
		0.870	-0.342				
		0.930	-0.340				
		0.960	-0.347				
			Lower Surface				
0.020	-1.153	0.020	-0.949	0.020	-0.809	0.020	-1.002
0.110	-0.163	0.060	-0.307	0.060	-0.149	0.060	0.016
0.230	-0.045	0.090	-0.136	0.090	-0.079	0.110	-0.183
0.400	0.064	0.120	-0.046	0.120	-0.060	0.250	-0.110
0.490	0.112	0.200	-0.045	0.200	-0.032	0.400	-0.047
0.630	2.316**	0.260	0.042	0.250	-0.024	0.490	0.020
0.750	0.215	0.400	0.061	0.400	0.013	0.580	0.099
0.850	0.220	0.490	0.114	0.490	-0.055	0.650	0.297
0.900	0.299	0.580	0.175	0.580	0.146	0.750	0.472
0.960	0.174	0.640	0.332	0.650	-0.096	0.830	0.523
		0.750	0.330	0.750	0.010	0.900	0.561
		0.870	0.344	0.890	0.545	0.960	0.421
		0.930	0.278	0.930	0.478		
		0.960	0.156	0.960	0.335		
CN =	0.438		0.526		0.511		0.620

Table C-2. Continued.

Flight 216, Wing sweep = 26°, Time = 9-30-33-500, MINF = 0.604, Camber = 10/16, ALPT = 2.93, BETA = -0.15, QINF = 304.0, RNPU = 3.1E+06, CNWP = 0.3619

η = 0.93		0.76		0.59		0.40	
			Upper Surface				
x/c	CP	x/c	CP	x/c	CP	x/c	CP
0.020	0.534	0.000	-0.204	0.000	0.573**	0.010	0.272
0.060	0.030	0.020	0.527	0.020	0.442	0.020	0.104
0.110	-0.303	0.040	0.270	0.060	-0.258**	0.060	-0.445
0.200	-0.391	0.060	-0.125	0.090	-0.465	0.110	-0.791
0.230	-0.347	0.090	-0.369	0.110	-0.643	0.140	-0.687
0.400	-0.293	0.130	-0.605	0.130	-3.916**	0.190	-3.916**
0.490	-0.285	0.150	-0.694	0.150	-0.597	0.250	-0.466
0.590	-0.399	0.200	-0.549	0.210	-0.541	0.400	-0.430
0.630	-0.463	0.250	-0.405	0.250	-0.467	0.490	-0.409
0.700	-0.654	0.260	-0.418	0.340	-0.456	0.580	-0.456
0.750	-0.869	0.280	-0.415	0.370	-0.464	0.650	-0.631
0.810	-0.804	0.290	-0.406	0.400	-0.413	0.700	-0.621
0.840	-0.871	0.310	-0.391	0.410	0.524**	0.750	-0.872
0.900	-0.291	0.320	-0.415	0.430	-0.457	0.800	-0.941
0.960	-0.280	0.340	-0.406	0.440	-0.463	0.830	-0.820
		0.350	-0.175**	0.460	-0.454	0.900	-0.391
		0.370	-0.403	0.490	-0.452	0.960	-0.427
		0.380	-0.422	0.500	-0.472		
		0.400	-0.336	0.520	-0.499		
		0.410	-0.403	0.540	-0.491		
		0.430	-0.386	0.550	-0.473		
		0.440	-0.387	0.580	-0.482		
		0.460	-0.394	0.600	-0.539		
		0.470	-0.434	0.610	-0.556		
		0.490	-0.427	0.650	-0.711		
		0.500	-0.436	0.700	-0.711		
		0.520	-0.414	0.750	-0.771		
		0.530	-0.441	0.820	-0.590		
		0.550	-0.476	0.890	-0.366		
		0.560	-0.491	0.900	-0.387		
		0.580	-0.451	0.960	-0.369		
		0.590	-0.519				
		0.600	-0.497				
		0.640	-0.684				
		0.700	-0.778				
		0.750	-0.081**				
		0.820	-0.596				
		0.870	-0.308				
		0.930	-0.340				
		0.960	-0.346				
			Lower Surface				
0.020	-1.207	0.020	-0.695	0.020	-0.562	0.020	-0.714
0.110	-0.104	0.060	-0.151	0.060	-0.059	0.060	0.016
0.230	-0.030	0.090	-0.049	0.090	-0.023	0.110	-0.123
0.400	0.064	0.120	0.012	0.120	-0.018	0.250	-0.077
0.490	0.120	0.200	-0.034	0.200	-0.004	0.400	-0.032
0.630	2.310**	0.260	0.066	0.250	0.008	0.490	0.027
0.750	0.211	0.400	0.083	0.400	0.042	0.580	0.099
0.850	0.220	0.490	0.122	0.490	-0.048	0.650	0.296
0.900	0.287	0.580	0.179	0.580	0.167	0.750	0.480
0.960	0.149	0.640	0.357	0.650	-0.089	0.830	0.522
		0.750	0.346	0.750	0.010	0.900	0.579
		0.870	0.370	0.890	0.572	0.960	0.414
		0.930	0.288	0.930	0.485		
		0.960	0.159	0.960	0.326		
CN =	0.482		0.593		0.578		0.675

Table C-2. Continued.

Flight 216, Wing sweep = 26°, Time = 9-30-42-500, MINF = 0.607, Camber = 10/15, ALPT = 8.23, BETA = -0.50, QINF = 304.3, RNPU = 3.1E+06, CNWP = 0.5364

η = 0.93		0.76		0.59		0.40	
			Upper Surface				
x/c	CP	*x/c*	CP	*x/c*	CP	*x/c*	CP
0.020	-0.081	0.000	0.805	0.000	0.802**	0.010	-0.837
0.060	-0.537	0.020	-0.401	0.020	-0.559	0.020	-0.817
0.110	-0.793	0.040	-0.180	0.060	-0.967**	0.060	-1.513
0.200	-0.695	0.060	-0.951	0.090	-1.252	0.110	-1.577
0.230	-0.612	0.090	-1.124	0.110	-1.479	0.140	-1.292
0.400	-0.434	0.130	-1.429	0.130	-3.883**	0.190	-3.883**
0.490	-0.411	0.150	-1.687	0.150	-1.199	0.250	-0.705
0.590	-0.514	0.200	-1.036	0.210	-0.954	0.400	-0.592
0.630	-0.581	0.250	-0.723	0.250	-0.769	0.490	-0.532
0.700	-0.775	0.260	-0.716	0.340	-0.686	0.580	-0.566
0.750	-0.989	0.280	-0.697	0.370	-0.675	0.650	-0.697
0.810	-0.936	0.290	-0.662	0.400	-0.594	0.700	-0.699
0.840	-1.044	0.310	-0.627	0.410	0.553**	0.750	-0.841
0.900	-0.425	0.320	-0.655	0.430	-0.635	0.800	-0.732
0.960	-0.438	0.340	-0.624	0.440	-0.632	0.830	-0.668
		0.350	-0.231**	0.460	-0.612	0.900	-0.374
		0.370	-0.597	0.490	-0.601	0.960	-0.347
		0.380	-0.618	0.500	-0.613		
		0.400	-0.281	0.520	-0.637		
		0.410	-0.571	0.540	-0.621		
		0.430	-0.547	0.550	-0.598		
		0.440	-0.539	0.580	-0.601		
		0.460	-0.549	0.600	-0.649		
		0.470	-0.581	0.610	-0.657		
		0.490	-0.562	0.650	-0.794		
		0.500	-0.563	0.700	-0.771		
		0.520	-0.546	0.750	-0.817		
		0.530	-0.561	0.820	-0.546		
		0.550	-0.583	0.890	-0.428		
		0.560	-0.606	0.900	-0.432		
		0.580	-0.565	0.960	-0.422		
		0.590	-0.623				
		0.600	-0.593				
		0.640	-0.759				
		0.700	-0.831				
		0.750	-0.041**				
		0.820	-0.515				
		0.870	-0.322				
		0.930	-0.343				
		0.960	-0.349				
			Lower Surface				
0.020	0.018	0.020	0.177	0.020	0.250	0.020	0.407
0.110	0.091	0.060	0.293	0.060	0.321	0.060	0.060
0.230	0.084	0.090	0.264	0.090	0.301	0.110	0.260
0.400	0.100	0.120	0.250	0.120	0.254	0.250	0.129
0.490	0.134	0.200	0.082	0.200	0.100	0.400	0.127
0.630	2.338**	0.260	0.228	0.250	0.200	0.490	0.152
0.750	0.202	0.400	0.190	0.400	0.173	0.580	0.192
0.850	0.211	0.490	0.192	0.490	0.010	0.650	0.351
0.900	0.293	0.580	0.219	0.580	0.232	0.750	0.533
0.960	0.094	0.640	0.397	0.650	-0.052	0.830	0.574
		0.750	0.365	0.750	0.054	0.900	0.629
		0.870	0.396	0.890	0.616	0.960	0.440
		0.930	0.303	0.930	0.499		
		0.960	0.170	0.960	0.326		
CN =	0.726		0.925		0.898		1.004

Table C-2. Continued.

Flight 216, Wing sweep = 26°, Time = 9-31-36-000, MINF = 0.603, Camber = 10/13, ALPT = 2.92, BETA = -0.36, QINF = 302.3, RNPU = 3.1E+06, CNWP = 0.3297

η = 0.93		0.76		0.59		0.40	
			Upper Surface				
x/c	CP	*x/c*	CP	*x/c*	CP	*x/c*	CP
0.020	0.543	0.000	-0.224	0.000	0.567**	0.010	0.279
0.060	0.045	0.020	0.535	0.020	0.449	0.020	0.110
0.110	-0.323	0.040	0.287	0.060	-0.254**	0.060	-0.463
0.200	-0.376	0.060	-0.121	0.090	-0.452	0.110	-0.790
0.230	-0.343	0.090	-0.349	0.110	-0.624	0.140	-0.686
0.400	-0.275	0.130	-0.584	0.130	-3.934**	0.190	-3.934**
0.490	-0.278	0.150	-0.677	0.150	-0.562	0.250	-0.449
0.590	-0.381	0.200	-0.536	0.210	-0.530	0.400	-0.427
0.630	-0.430	0.250	-0.402	0.250	-0.457	0.490	-0.406
0.700	-0.593	0.260	-0.416	0.340	-0.446	0.580	-0.454
0.750	-0.819	0.280	-0.399	0.370	-0.462	0.650	-0.629
0.810	-0.747	0.290	-0.386	0.400	-0.403	0.700	-0.609
0.840	-0.805	0.310	-0.378	0.410	0.532**	0.750	-0.872
0.900	-0.235	0.320	-0.399	0.430	-0.455	0.800	-0.948
0.960	-0.150	0.340	-0.390	0.440	-0.450	0.830	-0.819
		0.350	-0.166**	0.460	-0.446	0.900	-0.397
		0.370	-0.386	0.490	-0.434	0.960	-0.432
		0.380	-0.406	0.500	-0.460		
		0.400	-0.322	0.520	-0.497		
		0.410	-0.387	0.540	-0.475		
		0.430	-0.360	0.550	-0.470		
		0.440	-0.372	0.580	-0.471		
		0.460	-0.380	0.600	-0.525		
		0.470	-0.419	0.610	-0.541		
		0.490	-0.409	0.650	-0.681		
		0.500	-0.417	0.700	-0.688		
		0.520	-0.404	0.750	-0.752		
		0.530	-0.425	0.820	-0.538		
		0.550	-0.455	0.890	-0.339		
		0.560	-0.471	0.900	-0.348		
		0.580	-0.436	0.960	-0.324		
		0.590	-0.490				
		0.600	-0.476				
		0.640	-0.654				
		0.700	-0.745				
		0.750	-0.105**				
		0.820	-0.419				
		0.870	-0.280				
		0.930	-0.304				
		0.960	-0.292				
			Lower Surface				
0.020	-1.225	0.020	-0.704	0.020	-0.560	0.020	-0.706
0.110	-0.112	0.060	-0.158	0.060	-0.080	0.060	0.021
0.230	-0.029	0.090	-0.050	0.090	-0.023	0.110	-0.119
0.400	0.040	0.120	0.017	0.120	-0.021	0.250	-0.072
0.490	0.096	0.200	-0.029	0.200	-0.006	0.400	-0.023
0.630	2.328**	0.260	0.065	0.250	0.009	0.490	0.032
0.750	0.172	0.400	0.081	0.400	0.047	0.580	0.105
0.850	0.181	0.490	0.112	0.490	-0.057	0.650	0.303
0.900	0.262	0.580	0.166	0.580	0.173	0.750	0.488
0.960	0.155	0.640	0.342	0.650	-0.112	0.830	0.522
		0.750	0.287	0.750	0.019	0.900	0.588
		0.870	0.273	0.890	0.581	0.960	0.416
		0.930	0.208	0.930	0.500		
		0.960	0.103	0.960	0.341		
CN =	0.432		0.530		0.558		0.678

Table C-2. Continued.

Flight 216, Wing sweep = 26°, Time = 9-32-40-000, MINF = 0.607, Camber = 10/10, ALPT = 3.26, BETA = -0.30, QINF = 307.4, RNPU = 3.1E+06, CNWP = 0.3315

η = 0.93		0.76		0.59		0.40	
			Upper Surface				
x/c	CP	*x/c*	CP	*x/c*	CP	*x/c*	CP
0.020	0.527	0.000	-0.179	0.000	0.565**	0.010	0.248
0.060	0.038	0.020	0.501	0.020	0.428	0.020	0.102
0.110	-0.290	0.040	0.262	0.060	-0.218**	0.060	-0.461
0.200	-0.376	0.060	-0.140	0.090	-0.471	0.110	-0.822
0.230	-0.344	0.090	-0.375	0.110	-0.655	0.140	-0.681
0.400	-0.277	0.130	-0.606	0.130	-3.875**	0.190	-3.875**
0.490	-0.276	0.150	-0.700	0.150	-0.609	0.250	-0.462
0.590	-0.366	0.200	-0.556	0.210	-0.554	0.400	-0.433
0.630	-0.410	0.250	-0.402	0.250	-0.466	0.490	-0.406
0.700	-0.549	0.260	-0.415	0.340	-0.445	0.580	-0.473
0.750	-0.739	0.280	-0.411	0.370	-0.460	0.650	-0.625
0.810	-0.650	0.290	-0.403	0.400	-0.403	0.700	-0.615
0.840	-0.719	0.310	-0.388	0.410	0.517**	0.750	-0.874
0.900	-0.311	0.320	-0.408	0.430	-0.468	0.800	-0.946
0.960	-0.112	0.340	-0.397	0.440	-0.459	0.830	-0.812
		0.350	-0.185**	0.460	-0.451	0.900	-0.406
		0.370	-0.393	0.490	-0.433	0.960	-0.439
		0.380	-0.415	0.500	-0.468		
		0.400	-0.323	0.520	-0.495		
		0.410	-0.393	0.540	-0.487		
		0.430	-0.383	0.550	-0.469		
		0.440	-0.378	0.580	-0.469		
		0.460	-0.391	0.600	-0.522		
		0.470	-0.418	0.610	-0.538		
		0.490	-0.404	0.650	-0.676		
		0.500	-0.421	0.700	-0.687		
		0.520	-0.403	0.750	-0.749		
		0.530	-0.427	0.820	-0.474		
		0.550	-0.463	0.890	-0.328		
		0.560	-0.475	0.900	-0.351		
		0.580	-0.435	0.960	-0.315		
		0.590	-0.501				
		0.600	-0.479				
		0.640	-0.652				
		0.700	-0.739				
		0.750	-0.127**				
		0.820	-0.440				
		0.870	-0.303				
		0.930	-0.319				
		0.960	-0.358				
			Lower Surface				
0.020	-1.211	0.020	-0.682	0.020	-0.542	0.020	-0.663
0.110	-0.110	0.060	-0.139	0.060	-0.047	0.060	0.018
0.230	-0.031	0.090	-0.050	0.090	-0.015	0.110	-0.103
0.400	0.025	0.120	0.018	0.120	-0.019	0.250	-0.071
0.490	0.074	0.200	-0.031	0.200	0.001	0.400	-0.026
0.630	2.284**	0.260	0.061	0.250	0.014	0.490	0.033
0.750	0.136	0.400	0.073	0.400	0.040	0.580	0.107
0.850	0.156	0.490	0.101	0.490	-0.077	0.650	0.299
0.900	0.235	0.580	0.149	0.580	0.171	0.750	0.478
0.960	0.150	0.640	0.323	0.650	-0.131	0.830	0.532
		0.750	0.236	0.750	0.008	0.900	0.584
		0.870	0.221	0.890	0.579	0.960	0.420
		0.930	0.199	0.930	0.500		
		0.960	0.106	0.960	0.349		
CN =	0.399		0.529		0.556		0.684

Table C-2. Continued.

Flight 216, Wing sweep = 26°, Time = 9-33-31-000, MINF = 0.600, Camber = 10/7, ALPT = 3.01, BETA = -0.56, QINF = 300.2, RNPU = 3.1E+06, CNWP = 0.3222

η = 0.93		0.76		0.59		0.40	
			Upper Surface				
x/c	CP	*x/c*	CP	*x/c*	CP	*x/c*	CP
0.020	0.545	0.000	-0.247	0.000	0.555**	0.010	0.313
0.060	0.045	0.020	0.529	0.020	0.459	0.020	0.143
0.110	-0.300	0.040	0.287	0.060	-0.172**	0.060	-0.413
0.200	-0.363	0.060	-0.115	0.090	-0.433	0.110	-0.766
0.230	-0.281	0.090	-0.343	0.110	-0.620	0.140	-0.664
0.400	-0.256	0.130	-0.571	0.130	-3.970**	0.190	-3.970**
0.490	-0.245	0.150	-0.663	0.150	-0.584	0.250	-0.448
0.590	-0.324	0.200	-0.526	0.210	-0.515	0.400	-0.425
0.630	-0.342	0.250	-0.389	0.250	-0.451	0.490	-0.400
0.700	-0.434	0.260	-0.400	0.340	-0.443	0.580	-0.445
0.750	-0.531	0.280	-0.389	0.370	-0.451	0.650	-0.623
0.810	-0.468	0.290	-0.381	0.400	-0.400	0.700	-0.612
0.840	-0.510	0.310	-0.368	0.410	0.527**	0.750	-0.872
0.900	-0.284	0.320	-0.389	0.430	-0.452	0.800	-0.971
0.960	-0.103	0.340	-0.382	0.440	-0.452	0.830	-0.834
		0.350	-0.171**	0.460	-0.437	0.900	-0.391
		0.370	-0.376	0.490	-0.431	0.960	-0.437
		0.380	-0.391	0.500	-0.454		
		0.400	-0.355	0.520	-0.493		
		0.410	-0.377	0.540	-0.474		
		0.430	-0.360	0.550	-0.458		
		0.440	-0.341	0.580	-0.466		
		0.460	-0.368	0.600	-0.526		
		0.470	-0.398	0.610	-0.540		
		0.490	-0.397	0.650	-0.678		
		0.500	-0.402	0.700	-0.691		
		0.520	-0.393	0.750	-0.755		
		0.530	-0.416	0.820	-0.539		
		0.550	-0.449	0.890	-0.327		
		0.560	-0.464	0.900	-0.338		
		0.580	-0.421	0.960	-0.315		
		0.590	-0.485				
		0.600	-0.464				
		0.640	-0.641				
		0.700	-0.734				
		0.750	-0.158**				
		0.820	-0.619				
		0.870	-0.265				
		0.930	-0.293				
		0.960	-0.325				
			Lower Surface				
0.020	-1.283	0.020	-0.753	0.020	-0.573	0.020	-0.733
0.110	-0.135	0.060	-0.183	0.060	-0.064	0.060	0.012
0.230	-0.039	0.090	-0.072	0.090	-0.028	0.110	-0.108
0.400	0.012	0.120	0.001	0.120	-0.031	0.250	-0.082
0.490	0.043	0.200	-0.038	0.200	-0.015	0.400	-0.022
0.630	2.335**	0.260	0.052	0.250	0.008	0.490	0.023
0.750	0.087	0.400	0.065	0.400	0.038	0.580	0.106
0.850	0.104	0.490	0.085	0.490	-0.096	0.650	0.296
0.900	0.181	0.580	0.127	0.580	0.165	0.750	0.473
0.960	0.130	0.640	0.297	0.650	-0.158	0.830	0.510
		0.750	0.181	0.750	0.006	0.900	0.583
		0.870	0.178	0.890	0.568	0.960	0.415
		0.930	0.171	0.930	0.487		
		0.960	0.099	0.960	0.370		
CN =	0.314		0.505		0.544		0.666

Table C-2. Continued.

Flight 216, Wing sweep = 26°, Time = 9-33-47-000, MINF = 0.587, Camber = 10/6, ALPT = 12.01, BETA = 0.19, QINF = 286.4, RNPU = 3.0E+06, CNWP = 0.7221

η = 0.93		0.76		0.59		0.40	
			Upper Surface				
x/c	CP	*x/c*	CP	*x/c*	CP	*x/c*	CP
0.020	-0.953	0.000	0.303	0.000	0.466**	0.010	-2.165
0.060	-1.164	0.020	-1.600	0.020	-2.196	0.020	-2.190
0.110	-1.209	0.040	-0.011	0.060	-1.403**	0.060	-2.146
0.200	-0.934	0.060	-1.740	0.090	-2.173	0.110	-1.721
0.230	-0.750	0.090	-2.000	0.110	-2.279	0.140	-1.314
0.400	-0.540	0.130	-1.661	0.130	-4.140**	0.190	-4.140**
0.490	-0.497	0.150	-2.075	0.150	-1.706	0.250	-0.843
0.590	-0.546	0.200	-1.571	0.210	-1.561	0.400	-0.620
0.630	-0.605	0.250	-0.872	0.250	-0.945	0.490	-0.515
0.700	-0.671	0.260	-0.830	0.340	-0.744	0.580	-0.498
0.750	-0.747	0.280	-0.815	0.370	-0.709	0.650	-0.554
0.810	-0.716	0.290	-0.764	0.400	-0.623	0.700	-0.531
0.840	-0.793	0.310	-0.737	0.410	0.574**	0.750	-0.552
0.900	-0.537	0.320	-0.744	0.430	-0.659	0.800	-0.587
0.960	-0.331	0.340	-0.732	0.440	-0.645	0.830	-0.446
		0.350	-0.247**	0.460	-0.628	0.900	-0.494
		0.370	-0.691	0.490	-0.590	0.960	-0.484
		0.380	-0.702	0.500	-0.615		
		0.400	-0.340	0.520	-0.643		
		0.410	-0.658	0.540	-0.615		
		0.430	-0.625	0.550	-0.600		
		0.440	-0.599	0.580	-0.595		
		0.460	-0.630	0.600	-0.620		
		0.470	-0.649	0.610	-0.633		
		0.490	-0.612	0.650	-0.819		
		0.500	-0.628	0.700	-0.734		
		0.520	-0.596	0.750	-0.782		
		0.530	-0.599	0.820	-0.647		
		0.550	-0.627	0.890	-0.376		
		0.560	-0.653	0.900	-0.348		
		0.580	-0.590	0.960	-0.307		
		0.590	-0.660				
		0.600	-0.610				
		0.640	-0.749				
		0.700	-0.813				
		0.750	-0.122**				
		0.820	-0.357				
		0.870	-0.264				
		0.930	-0.221				
		0.960	-0.235				
			Lower Surface				
0.020	0.344	0.020	0.568	0.020	0.607	0.020	0.710
0.110	0.210	0.060	0.497	0.060	0.551	0.060	0.095
0.230	0.110	0.090	0.452	0.090	0.487	0.110	0.483
0.400	0.099	0.120	0.389	0.120	0.411	0.250	0.263
0.490	0.104	0.200	0.111	0.200	0.136	0.400	0.227
0.630	2.470**	0.260	0.341	0.250	0.320	0.490	0.232
0.750	0.057	0.400	0.249	0.400	0.267	0.580	0.252
0.850	0.043	0.490	0.216	0.490	0.012	0.650	0.381
0.900	0.118	0.580	0.208	0.580	0.270	0.750	0.563
0.960	0.038	0.640	0.359	0.650	-0.121	0.830	0.590
		0.750	0.205	0.750	0.088	0.900	0.640
		0.870	0.249	0.890	0.618	0.960	0.422
		0.930	0.224	0.930	0.507		
		0.960	0.124	0.960	0.330		
CN =	0.770		1.053		1.105		1.135

Table C-2. Continued.

Flight 216, Wing sweep = 26°, Time = 9-34-25-500, MINF = 0.602, Camber = 10/4, ALPT = 3.05, BETA = -0.67, QINF = 301.9, RNPU = 3.1E+06, CNWP = 0.3308

η = 0.93		0.76		0.59		0.40	
			Upper Surface				
x/c	CP	*x/c*	CP	*x/c*	CP	*x/c*	CP
0.020	0.527	0.000	-0.185	0.000	0.615**	0.010	0.257
0.060	0.043	0.020	0.496	0.020	0.433	0.020	0.094
0.110	-0.291	0.040	0.271	0.060	-0.140**	0.060	-0.445
0.200	-0.368	0.060	-0.138	0.090	-0.475	0.110	-0.793
0.230	-0.328	0.090	-0.360	0.110	-0.650	0.140	-0.680
0.400	-0.247	0.130	-0.587	0.130	-3.941**	0.190	-3.941**
0.490	-0.218	0.150	-0.676	0.150	-0.598	0.250	-0.452
0.590	-0.261	0.200	-0.547	0.210	-0.533	0.400	-0.437
0.630	-0.276	0.250	-0.406	0.250	-0.463	0.490	-0.390
0.700	-0.330	0.260	-0.398	0.340	-0.434	0.580	-0.446
0.750	-0.343	0.280	-0.403	0.370	-0.464	0.650	-0.622
0.810	-0.295	0.290	-0.394	0.400	-0.384	0.700	-0.601
0.840	-0.344	0.310	-0.379	0.410	0.531**	0.750	-0.882
0.900	-0.215	0.320	-0.398	0.430	-0.457	0.800	-0.966
0.960	-0.074	0.340	-0.387	0.440	-0.443	0.830	-0.837
		0.350	-0.152**	0.460	-0.447	0.900	-0.373
		0.370	-0.370	0.490	-0.436	0.960	-0.449
		0.380	-0.400	0.500	-0.468		
		0.400	-0.324	0.520	-0.497		
		0.410	-0.370	0.540	-0.464		
		0.430	-0.351	0.550	-0.463		
		0.440	-0.350	0.580	-0.470		
		0.460	-0.373	0.600	-0.504		
		0.470	-0.389	0.610	-0.544		
		0.490	-0.398	0.650	-0.696		
		0.500	-0.387	0.700	-0.684		
		0.520	-0.352	0.750	-0.765		
		0.530	-0.399	0.820	-0.537		
		0.550	-0.445	0.890	-0.314		
		0.560	-0.442	0.900	-0.354		
		0.580	-0.405	0.960	-0.323		
		0.590	-0.449				
		0.600	-0.439				
		0.640	-0.614				
		0.700	-0.701				
		0.750	-0.182**				
		0.820	-0.597				
		0.870	-0.340				
		0.930	-0.291				
		0.960	-0.301				
			Lower Surface				
0.020	-1.237	0.020	-0.655	0.020	-0.501	0.020	-0.671
0.110	-0.121	0.060	-0.122	0.060	-0.070	0.060	0.019
0.230	-0.042	0.090	-0.067	0.090	-0.011	0.110	-0.121
0.400	-0.010	0.120	0.005	0.120	-0.037	0.250	-0.082
0.490	0.028	0.200	-0.027	0.200	0.013	0.400	-0.029
0.630	2.330**	0.260	0.059	0.250	0.008	0.490	0.038
0.750	0.025	0.400	0.050	0.400	0.031	0.580	0.099
0.850	0.039	0.490	0.084	0.490	-0.117	0.650	0.287
0.900	0.114	0.580	0.104	0.580	0.171	0.750	0.473
0.960	0.089	0.640	0.274	0.650	-0.171	0.830	0.537
		0.750	0.124	0.750	-0.001	0.900	0.593
		0.870	0.124	0.890	0.566	0.960	0.426
		0.930	0.174	0.930	0.491		
		0.960	0.098	0.960	0.349		
CN =	0.243		0.493		0.547		0.674

Table C-2. Continued.

Flight 216, Wing sweep = 26°, Time = 9-35-22-500, MINF = 0.599, Camber = 10/0, ALPT = 2.03, BETA = 0.22, QINF = 298.2, RNPU = 3.1E+06, CNWP = 0.2836

η = 0.93		0.76		0.59		0.40	
			Upper Surface				
x/c	CP	*x/c*	CP	*x/c*	CP	*x/c*	CP
0.020	0.600	0.000	-0.430	0.000	0.461**	0.010	0.428
0.060	0.089	0.020	0.615	0.020	0.562	0.020	0.257
0.110	-0.222	0.040	0.376	0.060	-0.060**	0.060	-0.281
0.200	-0.302	0.060	-0.020	0.090	-0.334	0.110	-0.646
0.230	-0.278	0.090	-0.255	0.110	-0.509	0.140	-0.592
0.400	-0.199	0.130	-0.483	0.130	-3.981**	0.190	-3.981**
0.490	-0.182	0.150	-0.579	0.150	-0.508	0.250	-0.394
0.590	-0.207	0.200	-0.457	0.210	-0.457	0.400	-0.385
0.630	-0.192	0.250	-0.341	0.250	-0.394	0.490	-0.368
0.700	-0.180	0.260	-0.333	0.340	-0.399	0.580	-0.419
0.750	-0.153	0.280	-0.344	0.370	-0.404	0.650	-0.599
0.810	-0.117	0.290	-0.344	0.400	-0.357	0.700	-0.588
0.840	-0.144	0.310	-0.325	0.410	0.546**	0.750	-0.855
0.900	-0.122	0.320	-0.338	0.430	-0.408	0.800	-0.984
0.960	-0.031	0.340	-0.336	0.440	-0.417	0.830	-0.844
		0.350	-0.164**	0.460	-0.408	0.900	-0.389
		0.370	-0.332	0.490	-0.402	0.960	-0.428
		0.380	-0.351	0.500	-0.437		
		0.400	-0.327	0.520	-0.458		
		0.410	-0.334	0.540	-0.435		
		0.430	-0.318	0.550	-0.438		
		0.440	-0.319	0.580	-0.447		
		0.460	-0.336	0.600	-0.494		
		0.470	-0.362	0.610	-0.516		
		0.490	-0.357	0.650	-0.683		
		0.500	-0.363	0.700	-0.672		
		0.520	-0.346	0.750	-0.755		
		0.530	-0.367	0.820	-0.598		
		0.550	-0.402	0.890	-0.330		
		0.560	-0.412	0.900	-0.343		
		0.580	-0.377	0.960	-0.323		
		0.590	-0.421				
		0.600	-0.411				
		0.640	-0.589				
		0.700	-0.675				
		0.750	-0.260**				
		0.820	-0.670				
		0.870	-0.632				
		0.930	-0.334				
		0.960	-0.347				
			Lower Surface				
0.020	-1.021	0.020	-0.989	0.020	-0.856	0.020	-1.075
0.110	-0.236	0.060	-0.367	0.060	-0.182	0.060	-0.001
0.230	-0.071	0.090	-0.202	0.090	-0.106	0.110	-0.204
0.400	-0.035	0.120	-0.086	0.120	-0.104	0.250	-0.122
0.490	-0.015	0.200	-0.066	0.200	-0.035	0.400	-0.057
0.630	2.367**	0.260	0.003	0.250	-0.028	0.490	0.003
0.750	-0.019	0.400	0.026	0.400	0.001	0.580	0.089
0.850	-0.017	0.490	0.046	0.490	-0.154	0.650	0.285
0.900	0.041	0.580	0.076	0.580	0.138	0.750	0.472
0.960	0.063	0.640	0.226	0.650	-0.243	0.830	0.515
		0.750	0.045	0.750	-0.007	0.900	0.580
		0.870	0.055	0.890	0.545	0.960	0.417
		0.930	0.086	0.930	0.462		
		0.960	0.024	0.960	0.343		
CN =	0.118		0.409		0.474		0.603

Table C-2. Continued.

Flight 216, Wing sweep = 26°, Time = 9-35-30-000, MINF = 0.609, Camber = 10/1, ALPT = 3.11, BETA = -0.01, QINF = 309.6, RNPU = 3.1E+06, CNWP = 0.3061

η = 0.93		0.76		0.59		0.40	
			Upper Surface				
x/c	CP	*x/c*	CP	*x/c*	CP	*x/c*	CP
0.020	0.549	0.000	-0.223	0.000	0.548**	0.010	0.283
0.060	0.042	0.020	0.521	0.020	0.450	0.020	0.128
0.110	-0.279	0.040	0.278	0.060	-0.238**	0.060	-0.431
0.200	-0.350	0.060	-0.123	0.090	-0.451	0.110	-0.801
0.230	-0.319	0.090	-0.352	0.110	-0.638	0.140	-0.689
0.400	-0.230	0.130	-0.584	0.130	-3.847**	0.190	-3.847**
0.490	-0.209	0.150	-0.677	0.150	-0.602	0.250	-0.459
0.590	-0.235	0.200	-0.538	0.210	-0.537	0.400	-0.437
0.630	-0.235	0.250	-0.400	0.250	-0.456	0.490	-0.403
0.700	-0.227	0.260	-0.399	0.340	-0.441	0.580	-0.453
0.750	-0.209	0.280	-0.397	0.370	-0.440	0.650	-0.625
0.810	-0.174	0.290	-0.380	0.400	-0.406	0.700	-0.614
0.840	-0.195	0.310	-0.370	0.410	0.514**	0.750	-0.871
0.900	-0.164	0.320	-0.393	0.430	-0.450	0.800	-0.939
0.960	-0.056	0.340	-0.381	0.440	-0.450	0.830	-0.811
		0.350	-0.177**	0.460	-0.445	0.900	-0.399
		0.370	-0.375	0.490	-0.422	0.960	-0.442
		0.380	-0.390	0.500	-0.460		
		0.400	-0.334	0.520	-0.489		
		0.410	-0.373	0.540	-0.484		
		0.430	-0.355	0.550	-0.467		
		0.440	-0.353	0.580	-0.463		
		0.460	-0.356	0.600	-0.521		
		0.470	-0.391	0.610	-0.535		
		0.490	-0.385	0.650	-0.693		
		0.500	-0.395	0.700	-0.688		
		0.520	-0.369	0.750	-0.757		
		0.530	-0.400	0.820	-0.525		
		0.550	-0.438	0.890	-0.359		
		0.560	-0.437	0.900	-0.364		
		0.580	-0.400	0.960	-0.340		
		0.590	-0.464				
		0.600	-0.441				
		0.640	-0.604				
		0.700	-0.684				
		0.750	-0.234**				
		0.820	-0.604				
		0.870	-0.554				
		0.930	-0.320				
		0.960	-0.319				
			Lower Surface				
0.020	-1.287	0.020	-0.755	0.020	-0.582	0.020	-0.647
0.110	-0.168	0.060	-0.196	0.060	-0.073	0.060	0.001
0.230	-0.048	0.090	-0.092	0.090	-0.033	0.110	-0.126
0.400	-0.032	0.120	-0.010	0.120	-0.049	0.250	-0.084
0.490	-0.020	0.200	-0.048	0.200	-0.025	0.400	-0.032
0.630	2.268**	0.260	0.033	0.250	0.000	0.490	0.015
0.750	-0.031	0.400	0.041	0.400	0.026	0.580	0.102
0.850	-0.011	0.490	0.057	0.490	-0.132	0.650	0.291
0.900	0.063	0.580	0.090	0.580	0.156	0.750	0.475
0.960	0.067	0.640	0.256	0.650	-0.219	0.830	0.523
		0.750	0.077	0.750	-0.005	0.900	0.578
		0.870	0.081	0.890	0.568	0.960	0.409
		0.930	0.113	0.930	0.483		
		0.960	0.046	0.960	0.336		
CN =	0.168		0.469		0.533		0.668

Table C-2. Continued.

Flight 216, Wing sweep = 26°, Time = 9-35-34-000, MINF = 0.610, Camber = 10/0, ALPT = 6.06, BETA = -0.67, QINF = 310.6, RNPU = 3.1E+06, CNWP = 0.4158

η = 0.93		0.76		0.59		0.40	
			Upper Surface				
x/c	CP	*x/c*	CP	*x/c*	CP	*x/c*	CP
0.020	0.261	0.000	0.556	0.000	0.797**	0.010	-0.320
0.060	-0.243	0.020	0.094	0.020	-0.045	0.020	-0.382
0.110	-0.542	0.040	-0.125	0.060	-0.607**	0.060	-0.961
0.200	-0.524	0.060	-0.557	0.090	-0.878	0.110	-1.267
0.230	-0.451	0.090	-0.753	0.110	-1.108	0.140	-1.000
0.400	-0.303	0.130	-1.009	0.130	-3.835**	0.190	-3.835**
0.490	-0.262	0.150	-1.071	0.150	-0.910	0.250	-0.619
0.590	-0.284	0.200	-0.818	0.210	-0.790	0.400	-0.529
0.630	-0.265	0.250	-0.581	0.250	-0.637	0.490	-0.474
0.700	-0.260	0.260	-0.562	0.340	-0.585	0.580	-0.508
0.750	-0.222	0.280	-0.558	0.370	-0.569	0.650	-0.658
0.810	-0.194	0.290	-0.533	0.400	-0.505	0.700	-0.639
0.840	-0.223	0.310	-0.507	0.410	0.512**	0.750	-0.861
0.900	-0.196	0.320	-0.527	0.430	-0.536	0.800	-0.788
0.960	-0.097	0.340	-0.490	0.440	-0.544	0.830	-0.654
		0.350	-0.208**	0.460	-0.531	0.900	-0.401
		0.370	-0.487	0.490	-0.516	0.960	-0.419
		0.380	-0.507	0.500	-0.535		
		0.400	-0.316	0.520	-0.571		
		0.410	-0.470	0.540	-0.547		
		0.430	-0.446	0.550	-0.535		
		0.440	-0.439	0.580	-0.518		
		0.460	-0.456	0.600	-0.586		
		0.470	-0.476	0.610	-0.597		
		0.490	-0.469	0.650	-0.733		
		0.500	-0.469	0.700	-0.736		
		0.520	-0.444	0.750	-0.802		
		0.530	-0.464	0.820	-0.558		
		0.550	-0.502	0.890	-0.375		
		0.560	-0.506	0.900	-0.380		
		0.580	-0.462	0.960	-0.362		
		0.590	-0.517				
		0.600	-0.497				
		0.640	-0.651				
		0.700	-0.731				
		0.750	-0.227**				
		0.820	-0.621				
		0.870	-0.532				
		0.930	-0.323				
		0.960	-0.339				
			Lower Surface				
0.020	-0.328	0.020	-0.147	0.020	-0.070	0.020	0.005
0.110	-0.025	0.060	0.127	0.060	0.157	0.060	0.029
0.230	0.010	0.090	0.111	0.090	0.161	0.110	0.113
0.400	-0.003	0.120	0.131	0.120	0.110	0.250	0.046
0.490	-0.027	0.200	0.022	0.200	0.034	0.400	0.059
0.630	2.261**	0.260	0.123	0.250	0.123	0.490	0.083
0.750	-0.054	0.400	0.109	0.400	0.111	0.580	0.140
0.850	-0.027	0.490	0.107	0.490	-0.104	0.650	0.325
0.900	0.032	0.580	0.107	0.580	0.187	0.750	0.506
0.960	0.050	0.640	0.276	0.650	-0.197	0.830	0.551
		0.750	0.074	0.750	0.009	0.900	0.604
		0.870	0.091	0.890	0.602	0.960	0.416
		0.930	0.120	0.930	0.484		
		0.960	0.031	0.960	0.334		
CN =	0.277		0.661		0.723		0.852

Table C-2. Concluded.

Flight 198, Wing sweep = 26°, Time = 13-8-42-000, MINF = 0.590, Camber = 19/2, ALPT = 7.63, BETA = 0.60, QINF = 268.4, RNPU = 2.8E+06, CNWP = 0.3751

η = 0.93		0.76		0.59		0.40	
			Upper Surface				
x/c	CP	x/c	CP	x/c	CP	x/c	CP
0.020	0.738	0.000	-0.643	0.000	-8.239**	0.010	0.523**
0.060	0.004	0.020	0.747**	0.020	0.712**	0.020	0.348**
0.110	-0.546	0.040	0.344	0.060	-1.400**	0.060	-0.766
0.200	-0.651	0.060	-0.218	0.090	-0.842	0.110	-1.335
0.230	-0.453	0.090	-0.736	0.110	-1.348	0.140	2.095**
0.400	-0.238	0.130	-1.340	0.130	-2.024	0.190	-8.090**
0.490	-0.229	0.150	-1.532	0.150	-0.993	0.250	-0.566
0.590	-0.221	0.200	-0.904	0.210	-0.810	0.400	-0.392
0.630	-0.219	0.250	-0.549	0.250	-0.576	0.490	-0.328
0.700	-0.248	0.260	-0.515	0.340	-0.470	0.580	-0.303
0.750	-0.212	0.280	-0.496	0.370	-0.456	0.650	-0.377
0.810	-0.202	0.290	-0.477	0.400	-0.368	0.700	-0.322
0.840	-0.215	0.310	-0.430	0.410	-0.391	0.750	-0.299
0.900	-0.117	0.320	-0.445	0.430	-0.398	0.800	-0.235
0.960	-0.042	0.340	-0.426	0.440	-0.412	0.830	-0.263
		0.350	-0.173**	0.460	-0.383	0.900	-0.113
		0.370	-0.386	0.490	-0.379	0.960	0.016
		0.380	-0.359	0.500	-0.349		
		0.400	-0.309	0.520	-0.356		
		0.410	-0.363	0.540	-0.354		
		0.430	-0.331	0.550	-0.301		
		0.440	-0.305	0.580	-0.285		
		0.460	-0.352	0.600	-0.348		
		0.470	-0.351	0.610	-0.242		
		0.490	-0.303	0.650	-5.045**		
		0.500	-0.289	0.700	-0.325		
		0.520	-0.297	0.750	-0.268		
		0.530	-0.284	0.820	-0.275		
		0.550	-0.299	0.890	-0.128		
		0.560	-0.299	0.900	-0.106		
		0.580	-0.252	0.960	-0.035		
		0.590	-0.306				
		0.600	-0.303				
		0.640	-4.865**				
		0.700	-0.280				
		0.750	-0.244				
		0.820	-5.059**				
		0.870	-0.181				
		0.930	-0.070				
		0.960	-0.013				
			Lower Surface				
0.020	-0.867	0.020	-0.382	0.020	-0.556	0.020	-0.726
0.110	-0.245	0.060	-0.222	0.060	0.053	0.060	1.623**
0.230	-0.052	0.090	-0.135	0.090	0.182	0.110	0.269
0.400	0.070	0.120	0.000	0.120	0.180	0.250	0.046
0.490	0.045	0.200	-0.041	0.200	-0.047	0.400	-0.027
0.630	1.671**	0.260	0.105	0.250	0.104	0.490	-0.062
0.750	0.039	0.400	-5.078**	0.400	-0.004	0.580	-0.117
0.850	0.084	0.490	0.023	0.490	0.015	0.650	-0.007
0.900	0.112	0.580	0.043	0.580	-0.086	0.750	0.188
0.960	0.104	0.640	0.319	0.650	0.041	0.830	0.282
		0.750	0.123	0.750	0.248	0.900	0.323
		0.870	0.216	0.890	********	0.960	0.249
		0.930	0.192	0.930	0.222		
		0.960	0.117	0.960	-5.077**		
CN =	0.257		0.453		0.524		0.552

APPENDIX D

Wing Pressure Coefficients for Nominal Dynamic Pressure of 300 lb/ft^2 and Mach Number of 0.70.

Leading-edge wing sweep is 26°. Table D-1 contains a summary of the data listing in table D-2. The asterisks (*) in table D-2 indicate invalid values. Camber is $\delta_{LE/TE}$. Refer to Nomenclature for definitions.

Table D-1. Summary of data.

Flight	Time	MINF	Camber	ALPT	BETA	QINF	RNPU	CNWP
191	8-55-8-000	0.705	0/2	6.09	-0.16	304.7	2.7E+06	0.2787
191	8-55-9-500	0.704	0/2	5.96	-0.30	304.0	2.7E+06	0.2751
195	8-29-56-000	0.701	0/2	6.01	0.23	301.5	2.7E+06	0.2488
195	8-30-7-000	0.704	0/2	5.95	0.26	304.3	2.7E+06	0.2436
195	8-30-12-000	0.705	0/2	7.02	-0.30	306.0	2.8E+06	0.2474
195	8-30-20-000	0.700	0/2	7.00	0.15	300.5	2.7E+06	0.2668
195	8-30-35-500	0.687	0/2	8.10	0.18	285.2	2.6E+06	0.2909
195	8-30-47-000	0.693	0/2	9.07	0.10	292.1	2.7E+06	0.3584
195	8-30-52-000	0.704	0/2	10.14	0.26	302.0	2.7E+06	0.3427
195	8-30-58-500	0.702	0/2	10.90	0.23	301.4	2.7E+06	0.3936
200	8-30-17-000	0.696	0/2	6.16	-0.27	296.3	2.7E+06	0.2922
200	8-30-25-000	0.696	0/2	7.02	-0.33	295.5	2.7E+06	0.3127
200	8-30-31-000	0.696	0/2	7.99	-0.18	296.0	2.7E+06	0.3561
200	8-30-32-000	0.696	0/2	8.20	-0.33	296.0	2.7E+06	0.3388
222	10-51-24-000	0.692	0/2	11.95	0.54	298.1	2.7E+06	0.2582
222	10-51-25-000	0.691	0/2	12.25	-0.44	298.2	2.7E+06	0.2470
222	10-51-27-000	0.689	0/2	12.96	0.37	298.7	2.7E+06	0.1691
191	8-57-6-500	0.703	5/2	7.17	-0.14	303.6	2.7E+06	0.3272
191	8-57-14-000	0.708	5/2	9.11	-0.06	310.1	2.8E+06	0.4156
195	8-33-5-500	0.708	5/2	6.15	0.07	304.1	2.7E+06	0.3052
195	8-33-27-500	0.705	5/2	7.22	-0.03	300.8	2.7E+06	0.3432
195	8-33-43-500	0.695	5/2	8.05	-0.08	291.9	2.7E+06	0.3907
195	8-34-2-000	0.715	5/2	9.12	0.07	312.3	2.8E+06	0.4406
195	8-34-8-500	0.715	5/2	10.07	-0.08	311.4	2.8E+06	0.3911
195	8-34-12-500	0.703	5/2	11.06	0.05	299.5	2.7E+06	0.3610
195	8-34-26-000	0.697	5/2	11.27	0.05	297.5	2.7E+06	0.3728
195	8-34-33-500	0.697	5/2	11.88	0.13	301.7	2.7E+06	0.3778
195	8-35-52-000	0.700	5/6	5.12	-0.48	297.3	2.7E+06	0.3726
195	8-35-59-000	0.701	5/6	6.97	-0.37	297.2	2.7E+06	0.4529
195	8-36-15-000	0.705	5/6	8.03	-0.11	296.8	2.7E+06	0.4727

Table D-1. Concluded.

Flight	Time	MINF	Camber	ALPT	BETA	QINF	RNPU	CNWP
195	8-36-33-000	0.721	5/6	9.17	0.15	332.1	2.9E+06	0.4460
195	8-36-45-500	0.692	5/6	11.00	0.05	313.4	2.9E+06	0.4383
195	8-37-22-000	0.691	5/6	11.06	-0.19	312.5	2.9E+06	0.4411
195	8-39-31-500	0.696	5/10	3.95	-0.03	282.6	2.6E+06	0.3128
195	8-39-46-000	0.691	5/10	6.00	-0.32	278.5	2.5E+06	0.3859
195	8-39-57-500	0.690	5/10	7.01	-0.37	276.5	2.5E+06	0.4296
195	8-40-7-500	0.701	5/10	8.06	-0.11	286.0	2.6E+06	0.5042
195	8-41-2-000	0.686	5/10	6.99	-0.19	283.2	2.6E+06	0.4150
195	8-41-12-000	0.700	5/10	8.12	-0.08	299.5	2.7E+06	0.4919
195	8-41-18-500	0.703	5/10	9.29	0.10	306.0	2.8E+06	0.5275
195	8-41-26-000	0.697	5/10	10.06	-0.06	303.2	2.8E+06	0.5327
195	8-41-50-000	0.699	5/10	11.06	-0.06	313.7	2.8E+06	0.5325
195	8-41-58-500	0.700	5/10	11.02	0.28	319.4	2.9E+06	0.5307
204	8-29-13-000	0.695	10/10	7.18	0.17	281.4	2.6E+06	0.5226
204	8-29-16-000	0.691	10/10	8.13	0.25	279.8	2.6E+06	0.5499
204	8-29-23-000	0.694	10/10	11.25	0.80	290.0	2.6E+06	0.5207
223	10-6-25-000	0.702	5/15	3.12	0.25	288.0	2.6E+06	0.3044
223	10-6-40-000	0.702	5/16	4.04	-0.21	288.1	2.6E+06	0.3618
223	10-6-42-000	0.704	5/16	5.16	-0.07	289.9	2.6E+06	0.3858
223	10-6-44-500	0.705	5/16	6.08	-0.27	290.5	2.6E+06	0.4093
223	10-6-48-000	0.703	5/16	7.02	-0.21	288.2	2.6E+06	0.4371
223	10-6-54-000	0.702	5/15	7.98	-0.21	286.1	2.6E+06	0.5183
223	10-6-58-500	0.706	5/15	9.99	0.19	292.3	2.6E+06	0.6355
223	10-7-4-000	0.703	5/16	11.03	-0.10	295.0	2.7E+06	0.6281
223	10-7-12-500	0.693	5/16	11.95	-0.56	296.7	2.7E+06	0.6443
204	8-30-51-000	0.692	5/15	3.04	-0.24	282.6	2.6E+06	0.3626
204	8-30-57-500	0.697	5/15	5.04	-0.12	284.6	2.6E+06	0.4324
204	8-31-0-000	0.692	5/15	4.07	-0.07	278.7	2.5E+06	0.4111
204	8-31-8-500	0.692	5/15	8.21	0.25	279.4	2.6E+06	0.6380
204	8-31-11-500	0.692	5/15	9.29	0.34	280.9	2.6E+06	0.7725
204	8-31-17-500	0.687	5/16	11.05	-0.41	283.8	2.6E+06	0.7577

Table D-2. Listing of Data.

Flight 191, Wing sweep = 26°, Time = 8-55-8-000, MINF = 0.705, Camber = 0/2, ALPT = 6.09, BETA = -0.16, QINF = 304.7, RNPU = 2.7E+06, CNWP = 0.2787

η = 0.93		0.76		0.59		0.40	
			Upper Surface				
x/c	CP	x/c	CP	x/c	CP	x/c	CP
0.020	-0.510	0.000	0.788	0.000	-5.753**	0.010	-1.520
0.060	-0.296	0.020	-1.137	0.020	-1.261	0.020	-1.584
0.110	-0.235	0.040	-0.607	0.060	-0.514**	0.060	-0.704
0.200	-0.232	0.060	-0.640	0.090	-0.567	0.110	-0.635
0.230	-0.279	0.090	-0.489	0.110	-0.620	0.140	-0.597
0.400	-0.188	0.130	-0.469	0.130	-0.544	0.190	-6.394**
0.490	-0.184	0.150	-0.472	0.150	-0.496	0.250	-0.452
0.590	-0.213	0.200	-0.355	0.210	-0.554	0.400	-0.340
0.630	-0.215	0.250	-0.416**	0.250	-0.393	0.490	-0.349
0.700	-0.179	0.260	-0.295	0.340	-0.375	0.580	-0.320
0.750	-0.214	0.280	-0.362	0.370	-0.369	0.650	-0.350
0.810	-0.248	0.290	-0.362	0.400	-0.361	0.700	-0.330
0.840	-0.209	0.310	-0.330	0.410	-0.314	0.750	-0.351
0.900	-0.113	0.320	-0.302	0.430	-0.358	0.800	-0.355
0.960	-0.045	0.340	-0.315	0.440	-0.324	0.830	-0.308
		0.350	-0.210**	0.460	-0.346	0.900	-0.172
		0.370	-0.291	0.490	-0.284	0.960	-0.004
		0.380	-0.303	0.500	-0.335		
		0.400	-0.209	0.520	-0.284		
		0.410	-0.321	0.540	-0.306		
		0.430	-0.279	0.550	-0.312		
		0.440	-0.240	0.580	-0.311		
		0.460	-0.330	0.600	-0.297		
		0.470	-0.285	0.610	-0.235		
		0.490	-0.277	0.650	-3.704**		
		0.500	-0.261	0.700	-0.347		
		0.520	-0.291	0.750	-0.410		
		0.530	-0.252	0.820	-0.313		
		0.550	-0.275	0.890	-0.133		
		0.560	-0.267	0.900	-0.107		
		0.580	-0.244	0.960	-0.009		
		0.590	-0.286				
		0.600	-0.327				
		0.640	-3.545**				
		0.700	-0.294				
		0.750	-0.241				
		0.820	-3.716**				
		0.870	-0.206				
		0.930	-0.095				
		0.960	-0.023				
			Lower Surface				
0.020	-0.079	0.020	0.127	0.020	0.197	0.020	0.507
0.110	-0.120	0.060	0.114	0.060	0.234	0.060	1.922**
0.230	0.006	0.090	0.010	0.090	0.078	0.110	-0.006
0.400	-0.037	0.120	-0.019	0.120	-0.315**	0.250	-0.118
0.490	-0.062	0.200	0.009	0.200	-0.077	0.400	-0.119
0.630	1.947**	0.260	-0.130	0.250	-0.069	0.490	-0.202
0.750	0.023	0.400	-3.733**	0.400	-0.091	0.580	-0.192
0.850	0.093	0.490	-0.106	0.490	-0.006	0.650	-0.076
0.900	0.175	0.580	-0.049	0.580	-0.134	0.750	0.143
0.960	0.142	0.640	0.266	0.650	0.021	0.830	0.290
		0.750	0.152	0.750	0.237	0.900	0.348
		0.870	0.213	0.890	********	0.960	0.258
		0.930	0.222	0.930	0.236		
		0.960	0.139	0.960	-3.477**		
CN =	0.192		0.354		0.382		0.401

Table D-2. Continued.

Flight 191, Wing sweep = 26°, Time = 8-55-9-500, MINF = 0.704, Camber = 0/2, ALPT = 5.96, BETA = -0.30, QINF = 304.0, RNPU = 2.7E+06, CNWP = 0.2751

η = 0.93		0.76		0.59		0.40	
			Upper Surface				
x/c	CP	*x/c*	CP	*x/c*	CP	*x/c*	CP
0.020	-0.503	0.000	0.798	0.000	-5.766**	0.010	-1.523
0.060	-0.297	0.020	-1.118	0.020	-1.209	0.020	-1.588
0.110	-0.224	0.040	-0.591	0.060	-0.573**	0.060	-0.699
0.200	-0.233	0.060	-0.626	0.090	-0.558	0.110	-0.637
0.230	-0.294	0.090	-0.486	0.110	-0.613	0.140	-0.592
0.400	-0.203	0.130	-0.457	0.130	-0.545	0.190	-6.409**
0.490	-0.185	0.150	-0.466	0.150	-0.472	0.250	-0.440
0.590	-0.210	0.200	-0.364	0.210	-0.560	0.400	-0.334
0.630	-0.208	0.250	-0.417**	0.250	-0.386	0.490	-0.350
0.700	-0.180	0.260	-0.296	0.340	-0.376	0.580	-0.321
0.750	-0.218	0.280	-0.354	0.370	-0.363	0.650	-0.359
0.810	-0.249	0.290	-0.363	0.400	-0.362	0.700	-0.345
0.840	-0.195	0.310	-0.325	0.410	-0.315	0.750	-0.351
0.900	-0.111	0.320	-0.299	0.430	-0.359	0.800	-0.356
0.960	-0.046	0.340	-0.309	0.440	-0.325	0.830	-0.309
		0.350	-0.211**	0.460	-0.341	0.900	-0.181
		0.370	-0.288	0.490	-0.285	0.960	-0.008
		0.380	-0.300	0.500	-0.336		
		0.400	-0.220	0.520	-0.285		
		0.410	-0.316	0.540	-0.307		
		0.430	-0.268	0.550	-0.313		
		0.440	-0.237	0.580	-0.294		
		0.460	-0.331	0.600	-0.298		
		0.470	-0.292	0.610	-0.236		
		0.490	-0.274	0.650	-3.712**		
		0.500	-0.240	0.700	-0.348		
		0.520	-0.277	0.750	-0.411		
		0.530	-0.256	0.820	-0.314		
		0.550	-0.290	0.890	-0.133		
		0.560	-0.262	0.900	-0.107		
		0.580	-0.245	0.960	-0.010		
		0.590	-0.283				
		0.600	-0.328				
		0.640	-3.553**				
		0.700	-0.291				
		0.750	-0.238				
		0.820	-3.724**				
		0.870	-0.207				
		0.930	-0.095				
		0.960	-0.016				
			Lower Surface				
0.020	-0.098	0.020	0.099	0.020	0.182	0.020	0.495
0.110	-0.120	0.060	0.103	0.060	0.207	0.060	1.927**
0.230	0.005	0.090	0.004	0.090	0.059	0.110	-0.006
0.400	-0.040	0.120	-0.026	0.120	-0.316**	0.250	-0.118
0.490	-0.066	0.200	0.002	0.200	-0.077	0.400	-0.119
0.630	1.951**	0.260	-0.134	0.250	-0.077	0.490	-0.203
0.750	0.027	0.400	-3.742**	0.400	-0.092	0.580	-0.192
0.850	0.093	0.490	-0.106	0.490	-0.006	0.650	-0.084
0.900	0.175	0.580	-0.053	0.580	-0.134	0.750	0.143
0.960	0.146	0.640	0.266	0.650	0.021	0.830	0.282
		0.750	0.160	0.750	0.237	0.900	0.345
		0.870	0.213	0.890	********	0.960	0.259
		0.930	0.208	0.930	0.237		
		0.960	0.135	0.960	-3.485**		
CN =	0.193		0.348		0.377		0.399

Table D-2. Continued.

Flight 195, Wing sweep = 26°, Time = 8-29-56-000, MINF = 0.701, Camber = 0/2, ALPT = 6.01, BETA = 0.23, QINF = 301.5, RNPU = 2.7E+06, CNWP = 0.2488

η = 0.93		0.76		0.59		0.40	
			Upper Surface				
x/c	CP	*x/c*	CP	*x/c*	CP	*x/c*	CP
0.020	-0.468	0.000	0.804	0.000	-6.585**	0.010	-1.584
0.060	-0.293	0.020	-0.893	0.020	-1.165	0.020	-1.565
0.110	-0.245	0.040	-0.567	0.060	-1.260**	0.060	-0.689
0.200	-0.251	0.060	-0.570	0.090	-0.579	0.110	-0.607
0.230	-0.244	0.090	-0.449	0.110	-0.558	0.140	1.900**
0.400	-0.197	0.130	-0.465	0.130	-0.559	0.190	-6.453**
0.490	-0.182	0.150	-0.439	0.150	-0.444	0.250	-0.463
0.590	-0.204	0.200	-0.374	0.210	-0.545	0.400	-0.363
0.630	-0.210	0.250	-0.354	0.250	-0.433	0.490	-0.347
0.700	-0.229	0.260	-0.337	0.340	-0.395	0.580	-0.318
0.750	-0.201	0.280	-0.351	0.370	-0.397	0.650	-0.384
0.810	-0.202	0.290	-0.347	0.400	-0.350	0.700	-0.343
0.840	-0.200	0.310	-0.315	0.410	-0.349	0.750	-0.346
0.900	-0.111	0.320	-0.329	0.430	-0.377	0.800	-0.301
0.960	-0.016	0.340	-0.334	0.440	-0.349	0.830	-0.296
		0.350	-0.150**	0.460	-0.334	0.900	-0.181
		0.370	-0.307	0.490	-0.323	0.960	-0.001
		0.380	-0.291	0.500	-0.318		
		0.400	-0.261	0.520	-0.341		
		0.410	-0.297	0.540	-0.336		
		0.430	-0.267	0.550	-0.306		
		0.440	-0.254	0.580	-0.281		
		0.460	-0.306	0.600	-0.364		
		0.470	-0.299	0.610	-0.250		
		0.490	-0.281	0.650	-3.742**		
		0.500	-0.275	0.700	-0.335		
		0.520	-0.264	0.750	-0.289		
		0.530	-0.256	0.820	-0.293		
		0.550	-0.277	0.890	-0.131		
		0.560	-0.298	0.900	-0.103		
		0.580	-0.251	0.960	-0.031		
		0.590	-0.304				
		0.600	-0.291				
		0.640	-3.582**				
		0.700	-0.289				
		0.750	-0.257				
		0.820	-3.755**				
		0.870	-0.204				
		0.930	-0.085				
		0.960	-0.012				
			Lower Surface				
0.020	-0.074	0.020	0.064	0.020	0.168	0.020	0.486**
0.110	-0.126	0.060	0.105	0.060	0.158	0.060	5.512**
0.230	0.006	0.090	0.025	0.090	0.052	0.110	0.009
0.400	-0.055	0.120	-0.030	0.120	-0.106	0.250	-0.144
0.490	-0.076	0.200	0.013	0.200	-0.029	0.400	-0.126
0.630	3.342**	0.260	-0.101	0.250	-0.106	0.490	-0.167
0.750	0.012	0.400	-3.772**	0.400	-0.127	0.580	-0.199
0.850	0.071	0.490	-0.110	0.490	-0.024	0.650	-0.081
0.900	0.138	0.580	-0.071	0.580	-0.164	0.750	0.150
0.960	0.130	0.640	0.245	0.650	-0.014	0.830	0.261
		0.750	0.111	0.750	0.188	0.900	0.330
		0.870	0.203	0.890	********	0.960	0.256
		0.930	0.193	0.930	0.235		
		0.960	0.108	0.960	-3.771**		
CN =	0.178		0.335		0.350		0.386

Table D-2. Continued.

Flight 195, Wing sweep = 26°, Time = 8-30-7-000, MINF = 0.704, Camber = 0/2, ALPT = 5.95, BETA = 0.26, QINF = 304.3, RNPU = 2.7E+06, CNWP = 0.2436

η = 0.93		0.76		0.59		0.40	
			Upper Surface				
x/c	CP	*x/c*	CP	*x/c*	CP	*x/c*	CP
0.020	-0.424	0.000	0.828	0.000	-6.530**	0.010	-1.541
0.060	-0.255	0.020	-0.822	0.020	-0.822	0.020	-1.522
0.110	-0.223	0.040	-0.526	0.060	-1.178**	0.060	-0.706
0.200	-0.256	0.060	-0.542	0.090	-0.556	0.110	-0.594
0.230	-0.271	0.090	-0.424	0.110	-0.527	0.140	1.890**
0.400	-0.180	0.130	-0.440	0.130	-0.548	0.190	-6.400**
0.490	-0.169	0.150	-0.419	0.150	-0.432	0.250	-0.457
0.590	-0.206	0.200	-0.352	0.210	-0.527	0.400	-0.352
0.630	-0.200	0.250	-0.343	0.250	-0.421	0.490	-0.336
0.700	-0.215	0.260	-0.320	0.340	-0.383	0.580	-0.297
0.750	-0.195	0.280	-0.331	0.370	-0.378	0.650	-0.395
0.810	-0.206	0.290	-0.331	0.400	-0.303	0.700	-0.332
0.840	-0.197	0.310	-0.298	0.410	-0.334	0.750	-0.335
0.900	-0.105	0.320	-0.305	0.430	-0.351	0.800	-0.305
0.960	-0.001	0.340	-0.320	0.440	-0.338	0.830	-0.300
		0.350	-0.146**	0.460	-0.318	0.900	-0.172
		0.370	-0.293	0.490	-0.313	0.960	0.015
		0.380	-0.281	0.500	-0.317		
		0.400	-0.240	0.520	-0.330		
		0.410	-0.283	0.540	-0.325		
		0.430	-0.257	0.550	-0.301		
		0.440	-0.244	0.580	-0.254		
		0.460	-0.296	0.600	-0.352		
		0.470	-0.301	0.610	-0.240		
		0.490	-0.266	0.650	-3.714**		
		0.500	-0.259	0.700	-0.325		
		0.520	-0.246	0.750	-0.285		
		0.530	-0.246	0.820	-0.291		
		0.550	-0.267	0.890	-0.126		
		0.560	-0.275	0.900	-0.095		
		0.580	-0.235	0.960	-0.030		
		0.590	-0.285				
		0.600	-0.286				
		0.640	-3.555**				
		0.700	-0.286				
		0.750	-0.250				
		0.820	-3.726**				
		0.870	-0.194				
		0.930	-0.072				
		0.960	-0.008				
			Lower Surface				
0.020	-0.094	0.020	0.043	0.020	0.143	0.020	0.477**
0.110	-0.130	0.060	0.097	0.060	0.151	0.060	5.454**
0.230	0.017	0.090	0.001	0.090	0.047	0.110	-0.003
0.400	-0.046	0.120	-0.036	0.120	-0.114	0.250	-0.148
0.490	-0.068	0.200	0.010	0.200	-0.034	0.400	-0.125
0.630	3.304**	0.260	-0.107	0.250	-0.112	0.490	-0.158
0.750	0.020	0.400	-3.743**	0.400	-0.119	0.580	-0.194
0.850	0.082	0.490	-0.109	0.490	-0.017	0.650	-0.072
0.900	0.150	0.580	-0.066	0.580	-0.154	0.750	0.142
0.960	0.141	0.640	0.237	0.650	-0.006	0.830	0.275
		0.750	0.125	0.750	0.194	0.900	0.341
		0.870	0.209	0.890	********	0.960	0.261
		0.930	0.199	0.930	0.248		
		0.960	0.118	0.960	-3.742**		
CN =	0.178		0.322		0.342		0.380

Table D-2. Continued.

Flight 195, Wing sweep = 26°, Time = 8-30-12-000, MINF = 0.705, Camber = 0/2, ALPT = 7.02, BETA = -0.30, QINF = 306.0, RNPU = 2.8E+06, CNWP = 0.2474

η = 0.93		0.76		0.59		0.40	
			Upper Surface				
x/c	CP	x/c	CP	x/c	CP	x/c	CP
0.020	-0.830	0.000	0.672	0.000	-6.500**	0.010	-1.683
0.060	-0.414	0.020	-1.425	0.020	-1.536	0.020	-1.748
0.110	-0.318	0.040	-0.699	0.060	-1.637**	0.060	-1.609
0.200	-0.310	0.060	-0.726	0.090	-0.590	0.110	-0.597
0.230	-0.312	0.090	-0.561	0.110	-0.602	0.140	1.867**
0.400	-0.222	0.130	-0.559	0.130	-0.620	0.190	-6.371**
0.490	-0.200	0.150	-0.520	0.150	-0.502	0.250	-0.489
0.590	-0.230	0.200	-0.443	0.210	-0.614	0.400	-0.391
0.630	-0.231	0.250	-0.411	0.250	-0.490	0.490	-0.359
0.700	-0.246	0.260	-0.384	0.340	-0.441	0.580	-0.323
0.750	-0.223	0.280	-0.406	0.370	-0.421	0.650	-0.393
0.810	-0.227	0.290	-0.389	0.400	-0.386	0.700	-0.357
0.840	-0.225	0.310	-0.356	0.410	-0.380	0.750	-0.340
0.900	-0.133	0.320	-0.365	0.430	-0.386	0.800	-0.282
0.960	-0.043	0.340	-0.373	0.440	-0.374	0.830	-0.286
		0.350	-0.162**	0.460	-0.356	0.900	-0.150
		0.370	-0.344	0.490	-0.347	0.960	0.004
		0.380	-0.325	0.500	-0.336		
		0.400	-0.277	0.520	-0.369		
		0.410	-0.329	0.540	-0.357		
		0.430	-0.294	0.550	-0.331		
		0.440	-0.285	0.580	-0.293		
		0.460	-0.348	0.600	-0.381		
		0.470	-0.293	0.610	-0.273		
		0.490	-0.302	0.650	-3.700**		
		0.500	-0.301	0.700	-0.350		
		0.520	-0.304	0.750	-0.311		
		0.530	-0.279	0.820	-0.304		
		0.550	-0.281	0.890	-0.132		
		0.560	-0.317	0.900	-0.101		
		0.580	-0.272	0.960	-0.026		
		0.590	-0.311				
		0.600	-0.310				
		0.640	-3.542**				
		0.700	-0.308				
		0.750	-0.280				
		0.820	-3.712**				
		0.870	-0.214				
		0.930	-0.089				
		0.960	-0.021				
			Lower Surface				
0.020	0.041	0.020	0.235	0.020	0.304	0.020	0.605**
0.110	-0.070	0.060	0.192	0.060	0.235	0.060	5.418**
0.230	0.033	0.090	0.101	0.090	0.129	0.110	0.060
0.400	-0.049	0.120	0.030	0.120	-0.035	0.250	-0.088
0.490	-0.060	0.200	0.060	0.200	0.046	0.400	-0.087
0.630	3.279**	0.260	-0.052	0.250	-0.056	0.490	-0.134
0.750	0.013	0.400	-3.729**	0.400	-0.085	0.580	-0.175
0.850	0.064	0.490	-0.085	0.490	-0.015	0.650	-0.064
0.900	0.135	0.580	-0.054	0.580	-0.138	0.750	0.159
0.960	0.117	0.640	0.252	0.650	0.009	0.830	0.267
		0.750	0.141	0.750	0.197	0.900	0.333
		0.870	0.210	0.890	********	0.960	0.247
		0.930	0.195	0.930	0.240		
		0.960	0.107	0.960	-3.728**		
CN =	0.231		0.415		0.405		0.463

Table D-2. Continued.

Flight 195, Wing sweep = 26°, Time = 8-30-20-000, MINF = 0.700, Camber = 0/2, ALPT = 7.00, BETA = 0.15, QINF = 300.5, RNPU = 2.7E+06, CNWP = 0.2668

η = 0.93		0.76		0.59		0.40	
			Upper Surface				
x/c	CP	*x/c*	CP	*x/c*	CP	*x/c*	CP
0.020	-0.799	0.000	0.671	0.000	-6.605**	0.010	-1.736
0.060	-0.423	0.020	-1.452	0.020	-1.566	0.020	-1.760
0.110	-0.314	0.040	-0.713	0.060	-1.561**	0.060	-1.618
0.200	-0.289	0.060	-0.726	0.090	-0.602	0.110	-0.629
0.230	-0.319	0.090	-0.563	0.110	-0.614	0.140	1.906**
0.400	-0.228	0.130	-0.554	0.130	-0.633	0.190	-6.473**
0.490	-0.205	0.150	-0.515	0.150	-0.504	0.250	-0.499
0.590	-0.235	0.200	-0.441	0.210	-0.608	0.400	-0.392
0.630	-0.233	0.250	-0.420	0.250	-0.489	0.490	-0.357
0.700	-0.248	0.260	-0.386	0.340	-0.428	0.580	-0.305
0.750	-0.210	0.280	-0.401	0.370	-0.422	0.650	-0.393
0.810	-0.229	0.290	-0.397	0.400	-0.394	0.700	-0.344
0.840	-0.208	0.310	-0.357	0.410	-0.381	0.750	-0.340
0.900	-0.134	0.320	-0.365	0.430	-0.409	0.800	-0.281
0.960	-0.038	0.340	-0.374	0.440	-0.368	0.830	-0.293
		0.350	-0.167**	0.460	-0.363	0.900	-0.145
		0.370	-0.348	0.490	-0.354	0.960	0.007
		0.380	-0.333	0.500	-0.338		
		0.400	-0.294	0.520	-0.359		
		0.410	-0.336	0.540	-0.351		
		0.430	-0.303	0.550	-0.326		
		0.440	-0.288	0.580	-0.300		
		0.460	-0.331	0.600	-0.377		
		0.470	-0.319	0.610	-0.272		
		0.490	-0.305	0.650	-3.754**		
		0.500	-0.303	0.700	-0.340		
		0.520	-0.280	0.750	-0.311		
		0.530	-0.278	0.820	-0.303		
		0.550	-0.282	0.890	-0.132		
		0.560	-0.311	0.900	-0.089		
		0.580	-0.265	0.960	-0.028		
		0.590	-0.318				
		0.600	-0.297				
		0.640	-3.593**				
		0.700	-0.308				
		0.750	-0.276				
		0.820	-3.766**				
		0.870	-0.215				
		0.930	-0.096				
		0.960	-0.023				
			Lower Surface				
0.020	0.060	0.020	0.220	0.020	0.309	0.020	0.602**
0.110	-0.073	0.060	0.190	0.060	0.251	0.060	5.529**
0.230	0.025	0.090	0.116	0.090	0.130	0.110	0.064
0.400	-0.037	0.120	0.029	0.120	-0.023	0.250	-0.091
0.490	-0.062	0.200	0.057	0.200	0.045	0.400	-0.076
0.630	3.352**	0.260	-0.058	0.250	-0.055	0.490	-0.130
0.750	0.023	0.400	-3.784**	0.400	-0.088	0.580	-0.155
0.850	0.060	0.490	-0.074	0.490	-0.025	0.650	-0.066
0.900	0.131	0.580	-0.056	0.580	-0.142	0.750	0.160
0.960	0.114	0.640	0.252	0.650	0.001	0.830	0.285
		0.750	0.123	0.750	0.218	0.900	0.331
		0.870	0.213	0.890	********	0.960	0.259
		0.930	0.190	0.930	0.236		
		0.960	0.108	0.960	-3.782**		
CN =	0.231		0.416		0.408		0.470

Table D-2. Continued.

Flight 195, Wing sweep = 26°, Time = 8-30-35-500, MINF = 0.687, Camber = 0/2, ALPT = 8.10, BETA = 0.18, QINF = 285.2, RNPU = 2.6E+06, CNWP = 0.2909

η = 0.93		0.76		0.59		0.40	
			Upper Surface				
x/c	CP	*x/c*	CP	*x/c*	CP	*x/c*	CP
0.020	-1.545	0.000	0.492	0.000	-6.923**	0.010	-1.977
0.060	-0.496	0.020	-1.825	0.020	-1.896	0.020	-2.002
0.110	-0.394	0.040	-1.629	0.060	-1.868**	0.060	-1.897
0.200	-0.353	0.060	-0.935	0.090	-1.067	0.110	-0.820
0.230	-0.387	0.090	-0.549	0.110	-0.782	0.140	2.017**
0.400	-0.248	0.130	-0.586	0.130	-0.570	0.190	-6.784**
0.490	-0.215	0.150	-0.560	0.150	-0.497	0.250	-0.503
0.590	-0.240	0.200	-0.480	0.210	-0.623	0.400	-0.391
0.630	-0.242	0.250	-0.448	0.250	-0.515	0.490	-0.368
0.700	-0.257	0.260	-0.420	0.340	-0.474	0.580	-0.329
0.750	-0.229	0.280	-0.429	0.370	-0.454	0.650	-0.381
0.810	-0.237	0.290	-0.420	0.400	-0.400	0.700	-0.343
0.840	-0.235	0.310	-0.385	0.410	-0.393	0.750	-0.320
0.900	-0.149	0.320	-0.394	0.430	-0.423	0.800	-0.251
0.960	-0.055	0.340	-0.401	0.440	-0.395	0.830	-0.252
		0.350	-0.157**	0.460	-0.375	0.900	-0.126
		0.370	-0.370	0.490	-0.389	0.960	-0.019
		0.380	-0.347	0.500	-0.369		
		0.400	-0.313	0.520	-0.371		
		0.410	-0.353	0.540	-0.362		
		0.430	-0.324	0.550	-0.335		
		0.440	-0.302	0.580	-0.308		
		0.460	-0.354	0.600	-0.389		
		0.470	-0.342	0.610	-0.257		
		0.490	-0.317	0.650	-3.918**		
		0.500	-0.311	0.700	-0.339		
		0.520	-0.303	0.750	-0.301		
		0.530	-0.289	0.820	-0.280		
		0.550	-0.304	0.890	-0.114		
		0.560	-0.314	0.900	-0.090		
		0.580	-0.278	0.960	-0.025		
		0.590	-0.322				
		0.600	-0.315				
		0.640	-3.748**				
		0.700	-0.305				
		0.750	-0.279				
		0.820	-3.931**				
		0.870	-0.200				
		0.930	-0.082				
		0.960	-0.020				
			Lower Surface				
0.020	0.163	0.020	0.365	0.020	0.448	0.020	0.703**
0.110	0.002	0.060	0.294	0.060	0.342	0.060	5.865**
0.230	0.062	0.090	0.196	0.090	0.223	0.110	0.167
0.400	-0.015	0.120	0.102	0.120	0.042	0.250	-0.025
0.490	-0.034	0.200	0.117	0.200	0.109	0.400	-0.033
0.630	3.571**	0.260	0.000	0.250	0.012	0.490	-0.082
0.750	0.009	0.400	-3.949**	0.400	-0.047	0.580	-0.138
0.850	0.059	0.490	-0.053	0.490	-0.010	0.650	-0.030
0.900	0.123	0.580	-0.024	0.580	-0.104	0.750	0.177
0.960	0.107	0.640	0.281	0.650	0.016	0.830	0.279
		0.750	0.125	0.750	0.199	0.900	0.338
		0.870	0.203	0.890	********	0.960	0.235
		0.930	0.196	0.930	0.241		
		0.960	0.106	0.960	-3.948**		
CN =	0.281		0.488		0.488		0.533

Table D-2. Continued.

Flight 195, Wing sweep = 26°, Time = 8-30-47-000, MINF = 0.693, Camber = 0/2, ALPT = 9.07, BETA = 0.10, QINF = 292.1, RNPU = 2.7E+06, CNWP = 0.3584

η = 0.93		0.76		0.59		0.40	
			Upper Surface				
x/c	CP	*x/c*	CP	*x/c*	CP	*x/c*	CP
0.020	-1.765	0.000	0.360	0.000	-6.772**	0.010	-2.102
0.060	-0.606	0.020	-1.930	0.020	-2.042	0.020	-2.126
0.110	-0.418	0.040	-1.818	0.060	-1.905**	0.060	-2.067
0.200	-0.409	0.060	-1.781	0.090	-1.891	0.110	-1.306
0.230	-0.405	0.090	-1.124	0.110	-1.631	0.140	1.958**
0.400	-0.279	0.130	-0.892	0.130	-1.064	0.190	-6.636**
0.490	-0.250	0.150	-0.521	0.150	-0.663	0.250	-0.490
0.590	-0.260	0.200	-0.428	0.210	-0.529	0.400	-0.416
0.630	-0.269	0.250	-0.463	0.250	-0.497	0.490	-0.387
0.700	-0.280	0.260	-0.423	0.340	-0.477	0.580	-0.352
0.750	-0.253	0.280	-0.445	0.370	-0.482	0.650	-0.379
0.810	-0.261	0.290	-0.437	0.400	-0.374	0.700	-0.333
0.840	-0.266	0.310	-0.397	0.410	-0.406	0.750	-0.310
0.900	-0.174	0.320	-0.415	0.430	-0.443	0.800	-0.265
0.960	-0.077	0.340	-0.418	0.440	-0.405	0.830	-0.249
		0.350	-0.167**	0.460	-0.387	0.900	-0.149
		0.370	-0.390	0.490	-0.370	0.960	-0.060
		0.380	-0.370	0.500	-0.378		
		0.400	-0.326	0.520	-0.378		
		0.410	-0.373	0.540	-0.373		
		0.430	-0.339	0.550	-0.345		
		0.440	-0.322	0.580	-0.317		
		0.460	-0.381	0.600	-0.378		
		0.470	-0.366	0.610	-0.278		
		0.490	-0.336	0.650	-3.839**		
		0.500	-0.335	0.700	-0.333		
		0.520	-0.318	0.750	-0.300		
		0.530	-0.302	0.820	-0.268		
		0.550	-0.323	0.890	-0.109		
		0.560	-0.330	0.900	-0.092		
		0.580	-0.291	0.960	-0.030		
		0.590	-0.348				
		0.600	-0.326				
		0.640	-3.673**				
		0.700	-0.311				
		0.750	-0.278				
		0.820	-3.851**				
		0.870	-0.197				
		0.930	-0.089				
		0.960	-0.029				
			Lower Surface				
0.020	0.262	0.020	0.470	0.020	0.504	0.020	0.747**
0.110	0.038	0.060	0.362	0.060	0.390	0.060	5.713**
0.230	0.085	0.090	0.248	0.090	0.279	0.110	0.196
0.400	-0.005	0.120	0.155	0.120	0.096	0.250	0.011
0.490	-0.032	0.200	0.149	0.200	0.147	0.400	-0.008
0.630	3.473**	0.260	0.031	0.250	0.044	0.490	-0.063
0.750	0.007	0.400	-3.869**	0.400	-0.029	0.580	-0.112
0.850	0.048	0.490	-0.039	0.490	-0.004	0.650	-0.028
0.900	0.113	0.580	-0.018	0.580	-0.092	0.750	0.184
0.960	0.093	0.640	0.279	0.650	0.021	0.830	0.279
		0.750	0.123	0.750	0.204	0.900	0.338
		0.870	0.209	0.890	********	0.960	0.225
		0.930	0.193	0.930	0.244		
		0.960	0.109	0.960	-3.868**		
CN =	0.322		0.567		0.583		0.607

Table D-2. Continued.

Flight 195, Wing sweep = 26°, Time = 8-30-52-000, MINF = 0.704, Camber = 0/2, ALPT = 10.14, BETA = 0.26, QINF = 302.0, RNPU = 2.7E+06, CNWP = 0.3427

η = 0.93		0.76		0.59		0.40	
			Upper Surface				
x/c	CP	*x/c*	CP	*x/c*	CP	*x/c*	CP
0.020	-1.892	0.000	0.257	0.000	-6.561**	0.010	-2.155
0.060	-1.764	0.020	-1.880	0.020	-2.103	0.020	-2.174
0.110	-0.342	0.040	-1.810	0.060	-1.874**	0.060	-2.128
0.200	-0.418	0.060	-1.903	0.090	-1.577	0.110	-1.911
0.230	-0.435	0.090	-1.861	0.110	-1.381	0.140	1.887**
0.400	-0.290	0.130	-1.214	0.130	-1.263	0.190	-6.429**
0.490	-0.268	0.150	-1.037	0.150	-1.086	0.250	-0.525
0.590	-0.271	0.200	-0.827	0.210	-1.112	0.400	-0.454
0.630	-0.288	0.250	-0.391	0.250	-0.869	0.490	-0.409
0.700	-0.286	0.260	-0.357	0.340	-0.596	0.580	-0.337
0.750	-0.253	0.280	-0.394	0.370	-0.501	0.650	-0.348
0.810	-0.265	0.290	-0.396	0.400	-0.431	0.700	-0.330
0.840	-0.270	0.310	-0.380	0.410	-0.421	0.750	-0.283
0.900	-0.177	0.320	-0.379	0.430	-0.411	0.800	-0.253
0.960	-0.089	0.340	-0.415	0.440	-0.374	0.830	-0.218
		0.350	-0.144**	0.460	-0.346	0.900	-0.150
		0.370	-0.377	0.490	-0.347	0.960	-0.081
		0.380	-0.358	0.500	-0.319		
		0.400	-0.320	0.520	-0.331		
		0.410	-0.373	0.540	-0.337		
		0.430	-0.348	0.550	-0.324		
		0.440	-0.293	0.580	-0.268		
		0.460	-0.351	0.600	-0.350		
		0.470	-0.342	0.610	-0.216		
		0.490	-0.319	0.650	-3.723**		
		0.500	-0.323	0.700	-0.258		
		0.520	-0.305	0.750	-0.243		
		0.530	-0.285	0.820	-0.208		
		0.550	-0.303	0.890	-0.080		
		0.560	-0.314	0.900	-0.086		
		0.580	-0.284	0.960	-0.026		
		0.590	-0.314				
		0.600	-0.303				
		0.640	-3.563**				
		0.700	-0.276				
		0.750	-0.244				
		0.820	-3.736**				
		0.870	-0.166				
		0.930	-0.065				
		0.960	-0.011				
			Lower Surface				
0.020	0.321	0.020	0.545	0.020	0.583	0.020	0.789**
0.110	0.074	0.060	0.405	0.060	0.461	0.060	5.515**
0.230	0.112	0.090	0.316	0.090	0.335	0.110	0.264
0.400	0.016	0.120	0.219	0.120	0.148	0.250	0.074
0.490	-0.020	0.200	0.191	0.200	0.200	0.400	0.039
0.630	3.348**	0.260	0.084	0.250	0.083	0.490	-0.035
0.750	0.006	0.400	-3.753**	0.400	0.010	0.580	-0.080
0.850	0.060	0.490	-0.023	0.490	0.003	0.650	-0.016
0.900	0.119	0.580	-0.011	0.580	-0.078	0.750	0.182
0.960	0.100	0.640	0.276	0.650	0.028	0.830	0.282
		0.750	0.145	0.750	0.222	0.900	0.345
		0.870	0.211	0.890	********	0.960	0.211
		0.930	0.198	0.930	0.239		
		0.960	0.102	0.960	-3.752**		
CN =	0.417		0.646		0.643		0.706

Table D-2. Continued.

Flight 195, Wing sweep = 26°, Time = 8-30-58-500, MINF = 0.702, Camber = 0/2, ALPT = 10.90, BETA = 0.23, QINF = 301.4, RNPU = 2.7E+06, CNWP = 0.3936

η = 0.93		0.76		0.59		0.40	
			Upper Surface				
x/c	CP	*x/c*	CP	*x/c*	CP	*x/c*	CP
0.020	-2.017	0.000	0.139	0.000	-6.584**	0.010	-2.246
0.060	-1.806	0.020	-2.034	0.020	-2.280	0.020	-2.263
0.110	-0.624	0.040	-1.825	0.060	-2.006**	0.060	-2.248
0.200	-0.518	0.060	-1.981	0.090	-2.076	0.110	-1.926
0.230	-0.525	0.090	-1.567	0.110	-1.843	0.140	1.874**
0.400	-0.302	0.130	-1.349	0.130	-1.481	0.190	-6.452**
0.490	-0.290	0.150	-1.148	0.150	-1.282	0.250	-0.537
0.590	-0.272	0.200	-0.972	0.210	-1.266	0.400	-0.451
0.630	-0.300	0.250	-0.532	0.250	-0.853	0.490	-0.402
0.700	-0.280	0.260	-0.471	0.340	-0.517	0.580	-0.313
0.750	-0.232	0.280	-0.486	0.370	-0.452	0.650	-0.352
0.810	-0.247	0.290	-0.470	0.400	-0.392	0.700	-0.327
0.840	-0.259	0.310	-0.447	0.410	-0.360	0.750	-0.331
0.900	-0.162	0.320	-0.477	0.430	-0.378	0.800	-0.321
0.960	-0.079	0.340	-0.454	0.440	-0.365	0.830	-0.216
		0.350	-0.176**	0.460	-0.341	0.900	-0.198
		0.370	-0.410	0.490	-0.330	0.960	-0.166
		0.380	-0.391	0.500	-0.326		
		0.400	-0.364	0.520	-0.325		
		0.410	-0.387	0.540	-0.320		
		0.430	-0.357	0.550	-0.284		
		0.440	-0.347	0.580	-0.283		
		0.460	-0.386	0.600	-0.324		
		0.470	-0.367	0.610	-0.207		
		0.490	-0.335	0.650	-3.741**		
		0.500	-0.309	0.700	-0.259		
		0.520	-0.317	0.750	-0.230		
		0.530	-0.300	0.820	-0.188		
		0.550	-0.306	0.890	-0.075		
		0.560	-0.313	0.900	-0.058		
		0.580	-0.275	0.960	-0.030		
		0.590	-0.301				
		0.600	-0.290				
		0.640	-3.581**				
		0.700	-0.266				
		0.750	-0.227				
		0.820	-3.754**				
		0.870	-0.131				
		0.930	-0.065				
		0.960	-0.029				
			Lower Surface				
0.020	0.375	0.020	0.610	0.020	0.635	0.020	0.819**
0.110	0.104	0.060	0.449	0.060	0.490	0.060	5.514**
0.230	0.116	0.090	0.350	0.090	0.371	0.110	0.308
0.400	0.012	0.120	0.252	0.120	0.186	0.250	0.096
0.490	-0.010	0.200	0.219	0.200	0.216	0.400	0.042
0.630	3.343**	0.260	0.095	0.250	0.115	0.490	-0.017
0.750	0.016	0.400	-3.771**	0.400	0.019	0.580	-0.081
0.850	0.034	0.490	-0.012	0.490	0.006	0.650	-0.005
0.900	0.090	0.580	0.010	0.580	-0.072	0.750	0.185
0.960	0.072	0.640	0.277	0.650	0.038	0.830	0.277
		0.750	0.126	0.750	0.204	0.900	0.336
		0.870	0.191	0.890	********	0.960	0.197
		0.930	0.172	0.930	0.213		
		0.960	0.072	0.960	-3.770**		
CN =	0.456		0.672		0.695		0.732

Table D-2. Continued.

Flight 200, Wing sweep = 26°, Time = 8-30-17-000, MINF = 0.696, Camber = 0/2, ALPT = 6.16, BETA = -0.27, QINF = 296.3, RNPU = 2.7E+06, CNWP = 0.2922

η = 0.93		0.76		0.59		0.40	
			Upper Surface				
x/c	CP	*x/c*	CP	*x/c*	CP	*x/c*	CP
0.020	-0.569	0.000	0.783	0.000	0.757**	0.010	-1.654
0.060	-0.322	0.020	-1.119	0.020	-1.342	0.020	-1.610**
0.110	-0.271	0.040	-0.620	0.060	0.415**	0.060	-0.641**
0.200	-0.215	0.060	-0.644	0.090	-0.538	0.110	-0.588
0.230	-0.254	0.090	-0.455	0.110	-0.617	0.140	-0.603
0.400	-0.194	0.130	-0.426	0.130	-0.510	0.190	-2.948**
0.490	-0.169	0.150	-0.464	0.150	-0.549	0.250	-0.437
0.590	-0.229	0.200	-0.366	0.210	-0.519	0.400	-0.378
0.630	-0.213	0.250	-0.394	0.250	-0.380	0.490	-0.335
0.700	-0.178	0.260	-0.313	0.340	-0.361	0.580	-0.308
0.750	-0.225	0.280	-0.349	0.370	-0.387	0.650	-0.348
0.810	-0.188	0.290	-0.349	0.400	-0.371	0.700	-0.321
0.840	-0.173	0.310	-0.330	0.410	-0.321	0.750	-0.336
0.900	-0.110	0.320	-0.321	0.430	-0.339	0.800	-0.319
0.960	-0.022	0.340	-0.295	0.440	-0.292	0.830	-0.282
		0.350	-0.204**	0.460	-0.339	0.900	-0.152
		0.370	-0.280	0.490	-0.272	0.960	0.006**
		0.380	-0.333	0.500	-0.310		
		0.400	-0.238	0.520	-0.269		
		0.410	-0.316	0.540	-0.292		
		0.430	-0.270	0.550	-0.277		
		0.440	-0.219	0.580	-0.285		
		0.460	-0.302	0.600	-0.300		
		0.470	-0.285	0.610	-0.300		
		0.490	-0.273	0.650	0.027**		
		0.500	-0.264	0.700	-0.336		
		0.520	-0.275	0.750	-0.380		
		0.530	-0.259	0.820	-0.108		
		0.550	-0.288	0.890	-0.150		
		0.560	-0.277	0.900	-0.094		
		0.580	-0.249	0.960	0.029		
		0.590	-0.315				
		0.600	-0.311				
		0.640	-0.279				
		0.700	-0.288				
		0.750	-0.007**				
		0.820	-0.215				
		0.870	-0.198				
		0.930	-0.087				
		0.960	-0.024				
			Lower Surface				
0.020	-0.082	0.020	0.101	0.020	0.228	0.020	0.532
0.110	-0.094	0.060	0.093	0.060	0.203	0.060	0.072
0.230	-0.011	0.090	0.029	0.090	0.088	0.110	0.018
0.400	-0.028	0.120	-0.025**	0.120	-0.243	0.250	-0.107
0.490	-0.035	0.200	-0.006	0.200	-0.054	0.400	-0.107
0.630	1.232**	0.260	-0.126	0.250	-0.055	0.490	-0.168
0.750	0.024	0.400	-0.101	0.400	-0.097	0.580	-0.176
0.850	0.083	0.490	-0.116	0.490	-0.012	0.650	-0.073
0.900	0.183	0.580	-0.111	0.580	-0.123	0.750	0.136
0.960	0.140	0.640	0.046	0.650	0.017	0.830	0.275
		0.750	0.179	0.750	-0.012**	0.900	0.349
		0.870	0.207	0.890	0.287	0.960	0.273
		0.930	0.204	0.930	0.228		
		0.960	0.167	0.960	0.741		
CN =	0.196		0.333		0.355		0.352

Table D-2. Continued.

Flight 200, Wing sweep = 26°, Time = 8-30-25-000, MINF = 0.696, Camber = 0/2, ALPT = 7.02, BETA = -0.33, QINF = 295.5, RNPU = 2.7E+06, CNWP = 0.3127

η = 0.93		0.76		0.59		0.40	
			Upper Surface				
x/c	CP	*x/c*	CP	*x/c*	CP	*x/c*	CP
0.020	-0.930	0.000	0.648	0.000	0.713**	0.010	-1.718
0.060	-0.423	0.020	-1.656	0.020	-1.608	0.020	-1.758**
0.110	-0.326	0.040	-0.738	0.060	0.279**	0.060	-1.597**
0.200	-0.262	0.060	-0.783	0.090	-0.557	0.110	-0.630
0.230	-0.288	0.090	-0.554	0.110	-0.669	0.140	-0.678
0.400	-0.198	0.130	-0.516	0.130	-0.567	0.190	-2.952**
0.490	-0.184	0.150	-0.530	0.150	-0.589	0.250	-0.462
0.590	-0.225	0.200	-0.435	0.210	-0.558	0.400	-0.389
0.630	-0.221	0.250	-0.429	0.250	-0.413	0.490	-0.341
0.700	-0.190	0.260	-0.359	0.340	-0.396	0.580	-0.315
0.750	-0.233	0.280	-0.390	0.370	-0.408	0.650	-0.324
0.810	-0.214	0.290	-0.377	0.400	-0.361	0.700	-0.318
0.840	-0.199	0.310	-0.366	0.410	-0.357	0.750	-0.333
0.900	-0.136	0.320	-0.349	0.430	-0.359	0.800	-0.316
0.960	-0.033	0.340	-0.326	0.440	-0.335	0.830	-0.260
		0.350	-0.190**	0.460	-0.353	0.900	-0.135
		0.370	-0.318	0.490	-0.284	0.960	0.003**
		0.380	-0.358	0.500	-0.331		
		0.400	-0.271	0.520	-0.283		
		0.410	-0.338	0.540	-0.310		
		0.430	-0.290	0.550	-0.300		
		0.440	-0.249	0.580	-0.299		
		0.460	-0.323	0.600	-0.324		
		0.470	-0.308	0.610	-0.311		
		0.490	-0.300	0.650	0.016**		
		0.500	-0.291	0.700	-0.344		
		0.520	-0.302	0.750	-0.388		
		0.530	-0.274	0.820	-0.101		
		0.550	-0.312	0.890	-0.138		
		0.560	-0.292	0.900	-0.085		
		0.580	-0.273	0.960	0.037		
		0.590	-0.316				
		0.600	-0.323				
		0.640	-0.304				
		0.700	-0.292				
		0.750	0.004**				
		0.820	-0.219				
		0.870	-0.209				
		0.930	-0.090				
		0.960	-0.024				
			Lower Surface				
0.020	0.019	0.020	0.258	0.020	0.368	0.020	0.639
0.110	-0.051	0.060	0.189	0.060	0.274	0.060	0.140
0.230	0.005	0.090	0.095	0.090	0.159	0.110	0.084
0.400	-0.013	0.120	0.054**	0.120	-0.165	0.250	-0.065
0.490	-0.016	0.200	0.032	0.200	-0.009	0.400	-0.077
0.630	1.239**	0.260	-0.078	0.250	-0.021	0.490	-0.126
0.750	0.032	0.400	-0.070	0.400	-0.063	0.580	-0.157
0.850	0.084	0.490	-0.085	0.490	-0.001	0.650	-0.068
0.900	0.182	0.580	-0.091	0.580	-0.105	0.750	0.150
0.960	0.140	0.640	0.044	0.650	0.006	0.830	0.289
		0.750	0.196	0.750	-0.023**	0.900	0.339
		0.870	0.215	0.890	0.296	0.960	0.263
		0.930	0.216	0.930	0.240		
		0.960	0.168	0.960	0.747		
CN =	0.236		0.405		0.391		0.387

Table D-2. Continued.

Flight 200, Wing sweep = 26°, Time = 8-30-31-000, MINF = 0.696, Camber = 0/2, ALPT = 7.99, BETA = -0.18, QINF = 296.0, RNPU = 2.7E+06, CNWP = 0.3561

η = 0.93		0.76		0.59		0.40	
			Upper Surface				
x/c	CP	*x/c*	CP	*x/c*	CP	*x/c*	CP
0.020	-1.569	0.000	0.496	0.000	0.623**	0.010	-1.888
0.060	-0.436	0.020	-1.945	0.020	-1.795	0.020	-1.907**
0.110	-0.423	0.040	-1.608	0.060	-0.231**	0.060	-1.768**
0.200	-0.304	0.060	-1.193	0.090	-1.014	0.110	-0.902
0.230	-0.292	0.090	-0.531	0.110	-0.901	0.140	-0.627
0.400	-0.240	0.130	-0.526	0.130	-0.510	0.190	-2.951**
0.490	-0.214	0.150	-0.558	0.150	-0.567	0.250	-0.494
0.590	-0.252	0.200	-0.479	0.210	-0.576	0.400	-0.400
0.630	-0.244	0.250	-0.484	0.250	-0.446	0.490	-0.355
0.700	-0.206	0.260	-0.404	0.340	-0.429	0.580	-0.329
0.750	-0.253	0.280	-0.429	0.370	-0.419	0.650	-0.338
0.810	-0.225	0.290	-0.420	0.400	-0.394	0.700	-0.322
0.840	-0.225	0.310	-0.398	0.410	-0.384	0.750	-0.322
0.900	-0.158	0.320	-0.384	0.430	-0.378	0.800	-0.291
0.960	-0.065	0.340	-0.357	0.440	-0.349	0.830	-0.236
		0.350	-0.215**	0.460	-0.373	0.900	-0.126
		0.370	-0.351	0.490	-0.302	0.960	-0.017**
		0.380	-0.384	0.500	-0.334		
		0.400	-0.297	0.520	-0.303		
		0.410	-0.365	0.540	-0.327		
		0.430	-0.332	0.550	-0.317		
		0.440	-0.287	0.580	-0.303		
		0.460	-0.351	0.600	-0.339		
		0.470	-0.325	0.610	-0.314		
		0.490	-0.324	0.650	0.012**		
		0.500	-0.317	0.700	-0.344		
		0.520	-0.306	0.750	-0.388		
		0.530	-0.292	0.820	-0.102		
		0.550	-0.316	0.890	-0.125		
		0.560	-0.308	0.900	-0.078		
		0.580	-0.291	0.960	0.054		
		0.590	-0.333				
		0.600	-0.331				
		0.640	-0.311				
		0.700	-0.303				
		0.750	0.007**				
		0.820	-0.219				
		0.870	-0.202				
		0.930	-0.098				
		0.960	-0.028				
			Lower Surface				
0.020	0.169	0.020	0.381	0.020	0.450	0.020	0.717
0.110	-0.005	0.060	0.276	0.060	0.362	0.060	0.195
0.230	0.031	0.090	0.167	0.090	0.230	0.110	0.151
0.400	0.002	0.120	0.108**	0.120	-0.100	0.250	-0.015
0.490	-0.005	0.200	0.083	0.200	0.041	0.400	-0.040
0.630	1.233**	0.260	-0.031	0.250	0.027	0.490	-0.092
0.750	0.016	0.400	-0.040	0.400	-0.027	0.580	-0.130
0.850	0.076	0.490	-0.062	0.490	-0.001	0.650	-0.057
0.900	0.169	0.580	-0.076	0.580	-0.079	0.750	0.165
0.960	0.128	0.640	0.051	0.650	0.009	0.830	0.292
		0.750	0.200	0.750	-0.027**	0.900	0.340
		0.870	0.211	0.890	0.295	0.960	0.252
		0.930	0.211	0.930	0.236		
		0.960	0.164	0.960	0.734		
CN =	0.273		0.479		0.463		0.451

Table D-2. Continued.

Flight 200, Wing sweep = 26°, Time = 8-30-32-000, MINF = 0.696, Camber = 0/2, ALPT = 8.20, BETA = -0.33, QINF = 296.0, RNPU = 2.7E+06, CNWP = 0.3388

η = 0.93		0.76		0.59		0.40	
			Upper Surface				
x/c	CP	*x/c*	CP	*x/c*	CP	*x/c*	CP
0.020	-1.642	0.000	0.471	0.000	0.630**	0.010	-1.910
0.060	-0.474	0.020	-1.945	0.020	-1.812	0.020	-1.907**
0.110	-0.388	0.040	-1.655	0.060	-0.255**	0.060	-1.821**
0.200	-0.317	0.060	-1.664	0.090	-1.088	0.110	-0.981
0.230	-0.329	0.090	-0.583	0.110	-1.028	0.140	-0.645
0.400	-0.255	0.130	-0.486	0.130	-0.570	0.190	-2.951**
0.490	-0.214	0.150	-0.550	0.150	-0.558	0.250	-0.480
0.590	-0.252	0.200	-0.473	0.210	-0.567	0.400	-0.400
0.630	-0.248	0.250	-0.484	0.250	-0.446	0.490	-0.364
0.700	-0.213	0.260	-0.411	0.340	-0.429	0.580	-0.329
0.750	-0.253	0.280	-0.438	0.370	-0.443	0.650	-0.338
0.810	-0.232	0.290	-0.420	0.400	-0.402	0.700	-0.322
0.840	-0.225	0.310	-0.405	0.410	-0.376	0.750	-0.322
0.900	-0.161	0.320	-0.384	0.430	-0.378	0.800	-0.291
0.960	-0.062	0.340	-0.364	0.440	-0.349	0.830	-0.236
		0.350	-0.199**	0.460	-0.373	0.900	-0.121
		0.370	-0.355	0.490	-0.310	0.960	-0.017**
		0.380	-0.394	0.500	-0.353		
		0.400	-0.308	0.520	-0.303		
		0.410	-0.368	0.540	-0.327		
		0.430	-0.332	0.550	-0.329		
		0.440	-0.277	0.580	-0.312		
		0.460	-0.351	0.600	-0.339		
		0.470	-0.331	0.610	-0.314		
		0.490	-0.328	0.650	0.012**		
		0.500	-0.317	0.700	-0.337		
		0.520	-0.329	0.750	-0.384		
		0.530	-0.296	0.820	-0.096		
		0.550	-0.316	0.890	-0.121		
		0.560	-0.315	0.900	-0.078		
		0.580	-0.291	0.960	0.036		
		0.590	-0.333				
		0.600	-0.336				
		0.640	-0.311				
		0.700	-0.306				
		0.750	0.015**				
		0.820	-0.215				
		0.870	-0.206				
		0.930	-0.091				
		0.960	-0.021				
			Lower Surface				
0.020	0.148	0.020	0.402	0.020	0.466	0.020	0.730
0.110	0.005	0.060	0.287	0.060	0.376	0.060	0.202
0.230	0.031	0.090	0.182	0.090	0.244	0.110	0.151
0.400	-0.002	0.120	0.101**	0.120	-0.091	0.250	-0.009
0.490	-0.001	0.200	0.090	0.200	0.055	0.400	-0.033
0.630	1.233**	0.260	-0.023	0.250	0.034	0.490	-0.092
0.750	0.028	0.400	-0.036	0.400	-0.027	0.580	-0.130
0.850	0.076	0.490	-0.059	0.490	0.002	0.650	-0.042
0.900	0.169	0.580	-0.072	0.580	-0.079	0.750	0.165
0.960	0.123	0.640	0.059	0.650	0.009	0.830	0.292
		0.750	0.191	0.750	-0.027**	0.900	0.340
		0.870	0.202	0.890	0.295	0.960	0.246
		0.930	0.211	0.930	0.236		
		0.960	0.167	0.960	0.730		
CN =	0.285		0.496		0.471		0.463

Table D-2. Continued

Flight 222, Wing sweep = 26°, Time = 10-51-24-000, MINF = 0.692, Camber = 0/2, ALPT = 11.95, BETA = 0.54, QINF = 298.1, RNPU = 2.7E+06, CNWP = 0.2582

η = 0.93		0.76		0.59		0.40	
Upper Surface							
x/c	CP	*x/c*	CP	*x/c*	CP	*x/c*	CP
0.020	-2.194	0.000	-0.074	0.000	2.424**	0.010	-2.306
0.060	-1.398	0.020	-2.289	0.020	-2.242	0.020	-2.344
0.110	-0.984	0.040	-1.898	0.060	-5.086**	0.060	-2.281
0.200	-0.500	0.060	-1.694	0.090	-1.321	0.110	-1.596
0.230	-0.421	0.090	-1.232	0.110	-1.381	0.140	-1.475
0.400	-0.347	0.130	-1.064	0.130	-1.242	0.190	-2.986**
0.490	-0.305	0.150	-0.931	0.150	-1.207	0.250	-0.670
0.590	-0.308	0.200	-0.805	0.210	-1.082	0.400	-0.492
0.630	-0.315	0.250	-0.746	0.250	-0.811	0.490	-0.401
0.700	-0.283	0.260	-0.665	0.340	-0.740	0.580	-0.348
0.750	-0.281	0.280	-0.682	0.370	-0.679	0.650	-0.367
0.810	-0.277	0.290	-0.638	0.400	-0.617	0.700	-0.357
0.840	-0.272	0.310	-0.628	0.410	-3.988**	0.750	-0.367
0.900	-0.208	0.320	-0.583	0.430	-0.612	0.800	-0.390
0.960	-0.125	0.340	-0.592	0.440	-0.539	0.830	-0.276
		0.350	-0.325**	0.460	-0.554	0.900	-0.270
		0.370	-0.514	0.490	-0.425	0.960	-0.241
		0.380	-0.572	0.500	-0.512		
		0.400	-0.471	0.520	-0.467		
		0.410	-0.522	0.540	-0.431		
		0.430	-0.468	0.550	-0.374		
		0.440	-0.413	0.580	-0.364		
		0.460	-0.466	0.600	-0.408		
		0.470	-0.424	0.610	-0.336		
		0.490	-0.388	0.650	1.046**		
		0.500	-0.386	0.700	-0.315		
		0.520	-0.408	0.750	-0.362		
		0.530	-0.347	0.820	-0.244		
		0.550	-0.379	0.890	-0.175		
		0.560	-0.354	0.900	-0.154		
		0.580	-0.353	0.960	-0.109		
		0.590	-0.364				
		0.600	-0.364				
		0.640	-0.254				
		0.700	-0.293				
		0.750	-0.014**				
		0.820	-0.167				
		0.870	-0.160				
		0.930	-0.182				
		0.960	-0.164				
Lower Surface							
0.020	0.420	0.020	0.656	0.020	0.717	0.020	0.837
0.110	0.136	0.060	0.467	0.060	0.522	0.060	0.770**
0.230	0.092	0.090	0.352	0.090	0.111**	0.110	0.364
0.400	0.010	0.120	0.311	0.120	0.131	0.250	0.134
0.490	0.011	0.200	0.207	0.200	0.179	0.400	0.081
0.630	0.830**	0.260	0.093	0.250	0.163	0.490	-0.005
0.750	-0.030	0.400	0.033	0.400	0.037	0.580	-0.065
0.850	0.030	0.490	-0.027	0.490	-0.023	0.650	0.000
0.900	0.103	0.580	-0.047	0.580	-0.045	0.750	0.119
0.960	0.053	0.640	0.063	0.650	-0.045	0.830	0.303
		0.750	0.155	0.750	0.007	0.900	0.285
		0.870	0.162	0.890	0.210	0.960	0.151
		0.930	0.141	0.930	0.156		
		0.960	0.052	0.960	-3.216**		
CN =	0.458		0.674		0.654		0.806

Table D-2. Continued.

Flight 222, Wing sweep = 26°, Time = 10-51-25-000, MINF = 0.691, Camber = 0/2, ALPT = 12.25, BETA = -0.44, QINF = 298.2, RNPU = 2.7E+06, CNWP = 0.2470

η = 0.93		0.76		0.59		0.40	
			Upper Surface				
x/c	CP	*x/c*	CP	*x/c*	CP	*x/c*	CP
0.020	-1.473	0.000	-0.162	0.000	2.417**	0.010	-2.214
0.060	-1.305	0.020	-2.182	0.020	-1.769	0.020	-1.917
0.110	-1.257	0.040	-1.846	0.060	-5.092**	0.060	-1.579
0.200	-0.672	0.060	-1.561	0.090	-1.533	0.110	-1.529
0.230	-0.516	0.090	-1.293	0.110	-1.604	0.140	-1.073
0.400	-0.362	0.130	-1.220	0.130	-1.484	0.190	-2.992**
0.490	-0.312	0.150	-1.127	0.150	-1.309	0.250	-0.860
0.590	-0.308	0.200	-1.014	0.210	-1.135	0.400	-0.674
0.630	-0.280	0.250	-0.828	0.250	-0.796	0.490	-0.535
0.700	-0.253	0.260	-0.726	0.340	-0.656	0.580	-0.440
0.750	-0.242	0.280	-0.762	0.370	-0.608	0.650	-0.466
0.810	-0.237	0.290	-0.692	0.400	-0.565	0.700	-0.457
0.840	-0.234	0.310	-0.652	0.410	-3.994**	0.750	-0.396
0.900	-0.188	0.320	-0.607	0.430	-0.506	0.800	-0.432
0.960	-0.132	0.340	-0.618	0.440	-0.453	0.830	-0.338
		0.350	-0.344**	0.460	-0.457	0.900	-0.295
		0.370	-0.509	0.490	-0.394	0.960	-0.256
		0.380	-0.569	0.500	-0.429		
		0.400	-0.463	0.520	-0.406		
		0.410	-0.511	0.540	-0.396		
		0.430	-0.472	0.550	-0.342		
		0.440	-0.467	0.580	-0.321		
		0.460	-0.447	0.600	-0.352		
		0.470	-0.423	0.610	-0.315		
		0.490	-0.364	0.650	1.039**		
		0.500	-0.394	0.700	-0.278		
		0.520	-0.369	0.750	-0.281		
		0.530	-0.336	0.820	-0.237		
		0.550	-0.371	0.890	-0.212		
		0.560	-0.322	0.900	-0.161		
		0.580	-0.318	0.960	-0.130		
		0.590	-0.334				
		0.600	-0.337				
		0.640	-0.228				
		0.700	-0.252				
		0.750	-0.021**				
		0.820	-0.152				
		0.870	-0.145				
		0.930	-0.130				
		0.960	-0.108				
			Lower Surface				
0.020	0.438	0.020	0.681	0.020	0.725	0.020	0.823
0.110	0.135	0.060	0.475	0.060	0.543	0.060	0.763**
0.230	0.104	0.090	0.360	0.090	0.104**	0.110	0.493
0.400	0.014	0.120	0.325	0.120	0.156	0.250	0.140
0.490	0.022	0.200	0.211	0.200	0.200	0.400	0.082
0.630	0.823**	0.260	0.115	0.250	0.171	0.490	-0.005
0.750	-0.026	0.400	0.045	0.400	0.040	0.580	-0.062
0.850	0.022	0.490	-0.019	0.490	-0.015	0.650	-0.004
0.900	0.108	0.580	-0.040	0.580	-0.038	0.750	0.142
0.960	0.044	0.640	0.066	0.650	-0.037	0.830	0.273
		0.750	0.170	0.750	0.030	0.900	0.290
		0.870	0.151	0.890	0.195	0.960	0.159
		0.930	0.130	0.930	0.142		
		0.960	0.067	0.960	-3.222**		
CN =	0.484		0.691		0.663		0.838

Table D-2. Continued.

Flight 222, Wing sweep = 26°, Time = 10-51-27-000, MINF = 0.689, Camber = 0/2, ALPT = 12.96, BETA = 0.37, QINF = 298.7, RNPU = 2.7E+06, CNWP = 0.1691

η = 0.93		0.76		0.59		0.40	
			Upper Surface				
x/c	CP	*x/c*	CP	*x/c*	CP	*x/c*	CP
0.020	-1.374	0.000	-0.194	0.000	2.392**	0.010	-1.951
0.060	-1.285	0.020	-1.790	0.020	-1.046	0.020	-1.739
0.110	-1.085	0.040	-1.405	0.060	-5.105**	0.060	-1.506
0.200	-0.637	0.060	-1.209	0.090	-0.874	0.110	-1.361
0.230	-0.470	0.090	-1.101	0.110	-0.969	0.140	-1.206
0.400	-0.353	0.130	-0.994	0.130	-0.809	0.190	-3.009**
0.490	-0.318	0.150	-0.983	0.150	-0.843	0.250	-0.978
0.590	-0.311	0.200	-0.874	0.210	-0.789	0.400	-0.756
0.630	-0.279	0.250	-0.729	0.250	-0.693	0.490	-0.630
0.700	-0.244	0.260	-0.669	0.340	-0.723	0.580	-0.520
0.750	-0.249	0.280	-0.683	0.370	-0.662	0.650	-0.544
0.810	-0.239	0.290	-0.639	0.400	-0.615	0.700	-0.542
0.840	-0.248	0.310	-0.627	0.410	-4.009**	0.750	-0.453
0.900	-0.202	0.320	-0.607	0.430	-0.641	0.800	-0.479
0.960	-0.159	0.340	-0.609	0.440	-0.599	0.830	-0.375
		0.350	-0.341**	0.460	-0.604	0.900	-0.341
		0.370	-0.541	0.490	-0.545	0.960	-0.280
		0.380	-0.597	0.500	-0.590		
		0.400	-0.465	0.520	-0.566		
		0.410	-0.535	0.540	-0.537		
		0.430	-0.498	0.550	-0.481		
		0.440	-0.431	0.580	-0.436		
		0.460	-0.486	0.600	-0.464		
		0.470	-0.440	0.610	-0.414		
		0.490	-0.403	0.650	1.016**		
		0.500	-0.468	0.700	-0.443		
		0.520	-0.407	0.750	-0.438		
		0.530	-0.366	0.820	-0.347		
		0.550	-0.399	0.890	-0.296		
		0.560	-0.375	0.900	-0.238		
		0.580	-0.343	0.960	-0.241		
		0.590	-0.392				
		0.600	-0.397				
		0.640	-0.239				
		0.700	-0.276				
		0.750	-0.031**				
		0.820	-0.178				
		0.870	-0.199				
		0.930	-0.207				
		0.960	-0.203				
			Lower Surface				
0.020	0.467	0.020	0.720	0.020	0.748	0.020	0.849
0.110	0.163	0.060	0.505	0.060	0.590	0.060	0.740**
0.230	0.123	0.090	0.388	0.090	0.083**	0.110	0.379
0.400	0.033	0.120	0.304	0.120	0.190	0.250	0.175
0.490	0.030	0.200	0.234	0.200	0.228	0.400	0.111
0.630	0.800**	0.260	0.134	0.250	0.193	0.490	0.011
0.750	-0.026	0.400	0.060	0.400	0.058	0.580	-0.054
0.850	0.022	0.490	-0.007	0.490	-0.029	0.650	0.001
0.900	0.094	0.580	-0.039	0.580	-0.037	0.750	0.140
0.960	0.031	0.640	0.056	0.650	-0.058	0.830	0.295
		0.750	0.153	0.750	0.030	0.900	0.282
		0.870	0.223	0.890	0.181	0.960	0.137
		0.930	0.079	0.930	0.120		
		0.960	0.009	0.960	-3.239**		
CN =	0.475		0.666		0.639		0.886

Table D-2. Continued.

Flight 191, Wing sweep = 26°, Time = 8-57-6-500, MINF = 0.703, Camber = 5/2, ALPT = 7.17, BETA = -0.14, QINF = 303.6, RNPU = 2.7E+06, CNWP = 0.3272

η = 0.93		0.76		0.59		0.40	
			Upper Surface				
x/c	CP	*x/c*	CP	*x/c*	CP	*x/c*	CP
0.020	-0.132	0.000	0.874	0.000	-5.781**	0.010	-1.248
0.060	-0.264	0.020	-0.637	0.020	-0.513	0.020	-0.709
0.110	-0.432	0.040	-0.429	0.060	-0.587**	0.060	-1.173
0.200	-0.393	0.060	-0.697	0.090	-0.833	0.110	-1.002
0.230	-0.417	0.090	-0.730	0.110	-1.027	0.140	-1.348
0.400	-0.235	0.130	-0.896	0.130	-1.137	0.190	-6.425**
0.490	-0.208	0.150	-0.903	0.150	-0.788	0.250	-0.524
0.590	-0.249	0.200	-0.641	0.210	-0.732	0.400	-0.377
0.630	-0.229	0.250	-0.541**	0.250	-0.482	0.490	-0.381
0.700	-0.192	0.260	-0.398	0.340	-0.432	0.580	-0.357
0.750	-0.235	0.280	-0.455	0.370	-0.419	0.650	-0.362
0.810	-0.266	0.290	-0.447	0.400	-0.414	0.700	-0.339
0.840	-0.189	0.310	-0.406	0.410	-0.363	0.750	-0.353
0.900	-0.130	0.320	-0.374	0.430	-0.399	0.800	-0.336
0.960	-0.061	0.340	-0.386	0.440	-0.361	0.830	-0.295
		0.350	-0.205**	0.460	-0.380	0.900	-0.139
		0.370	-0.347	0.490	-0.316	0.960	-0.008
		0.380	-0.347	0.500	-0.368		
		0.400	-0.268	0.520	-0.297		
		0.410	-0.371	0.540	-0.329		
		0.430	-0.333	0.550	-0.331		
		0.440	-0.277	0.580	-0.306		
		0.460	-0.373	0.600	-0.316		
		0.470	-0.325	0.610	-0.272		
		0.490	-0.315	0.650	-3.725**		
		0.500	-0.304	0.700	-0.367		
		0.520	-0.317	0.750	-0.423		
		0.530	-0.288	0.820	-0.313		
		0.550	-0.311	0.890	-0.131		
		0.560	-0.299	0.900	-0.107		
		0.580	-0.278	0.960	-0.007		
		0.590	-0.311				
		0.600	-0.351				
		0.640	-3.566**				
		0.700	-0.314				
		0.750	-0.257				
		0.820	-3.737**				
		0.870	-0.215				
		0.930	-0.093				
		0.960	-0.025				
			Lower Surface				
0.020	-0.222	0.020	-0.028	0.020	0.064	0.020	0.344
0.110	-0.068	0.060	0.109	0.060	0.233	0.060	1.921**
0.230	0.049	0.090	0.045	0.090	0.105	0.110	0.050
0.400	-0.009	0.120	0.053	0.120	-0.242**	0.250	-0.027
0.490	-0.045	0.200	0.068	0.200	-0.038	0.400	-0.055
0.630	1.945**	0.260	-0.028	0.250	0.024	0.490	-0.153
0.750	0.029	0.400	-3.754**	0.400	-0.036	0.580	-0.156
0.850	0.088	0.490	-0.063	0.490	0.004	0.650	-0.056
0.900	0.168	0.580	-0.022	0.580	-0.092	0.750	0.164
0.960	0.136	0.640	0.285	0.650	0.041	0.830	0.305
		0.750	0.166	0.750	0.251	0.900	0.358
		0.870	0.219	0.890	********	0.960	0.265
		0.930	0.218	0.930	0.250		
		0.960	0.141	0.960	-3.497**		
CN =	0.263		0.454		0.485		0.521

Table D-2. Continued.

Flight 191, Wing sweep = 26°, Time = 8-57-14-000, MINF = 0.708, Camber = 5/2, ALPT = 9.11, BETA = -0.06, QINF = 310.1, RNPU = 2.8E+06, CNWP = 0.4156

η = 0.93		0.76		0.59		0.40	
			Upper Surface				
x/c	CP	*x/c*	CP	*x/c*	CP	*x/c*	CP
0.020	-0.677	0.000	0.772	0.000	-5.681**	0.010	-1.480
0.060	-0.622	0.020	-1.118	0.020	-1.234	0.020	-1.544
0.110	-0.646	0.040	-0.788	0.060	-0.792**	0.060	-1.543
0.200	-0.502	0.060	-1.107	0.090	-1.325	0.110	-1.641
0.230	-0.473	0.090	-1.212	0.110	-1.444	0.140	-1.667
0.400	-0.288	0.130	-1.296	0.130	-1.491	0.190	-6.311**
0.490	-0.253	0.150	-1.367	0.150	-1.489	0.250	-0.553
0.590	-0.270	0.200	-1.268	0.210	-1.456	0.400	-0.396
0.630	-0.264	0.250	-0.579**	0.250	-0.536	0.490	-0.385
0.700	-0.228	0.260	-0.442	0.340	-0.460	0.580	-0.342
0.750	-0.281	0.280	-0.499	0.370	-0.472	0.650	-0.339
0.810	-0.311	0.290	-0.506	0.400	-0.461	0.700	-0.335
0.840	-0.272	0.310	-0.451	0.410	-0.378	0.750	-0.317
0.900	-0.174	0.320	-0.422	0.430	-0.442	0.800	-0.295
0.960	-0.108	0.340	-0.446	0.440	-0.401	0.830	-0.227
		0.350	-0.202**	0.460	-0.403	0.900	-0.102
		0.370	-0.406	0.490	-0.331	0.960	-0.031
		0.380	-0.398	0.500	-0.390		
		0.400	-0.308	0.520	-0.325		
		0.410	-0.409	0.540	-0.369		
		0.430	-0.364	0.550	-0.353		
		0.440	-0.316	0.580	-0.326		
		0.460	-0.404	0.600	-0.340		
		0.470	-0.355	0.610	-0.272		
		0.490	-0.346	0.650	-3.667**		
		0.500	-0.347	0.700	-0.362		
		0.520	-0.340	0.750	-0.414		
		0.530	-0.315	0.820	-0.287		
		0.550	-0.349	0.890	-0.110		
		0.560	-0.328	0.900	-0.087		
		0.580	-0.297	0.960	0.014		
		0.590	-0.330				
		0.600	-0.388				
		0.640	-3.512**				
		0.700	-0.325				
		0.750	-0.279				
		0.820	-3.680**				
		0.870	-0.214				
		0.930	-0.095				
		0.960	-0.024				
			Lower Surface				
0.020	0.028	0.020	0.306	0.020	0.358	0.020	0.582
0.110	0.032	0.060	0.305	0.060	0.395	0.060	1.860**
0.230	0.117	0.090	0.197	0.090	0.257	0.110	0.164
0.400	0.023	0.120	0.182	0.120	-0.092**	0.250	0.070
0.490	-0.016	0.200	0.137	0.200	0.016	0.400	0.017
0.630	1.884**	0.260	0.051	0.250	0.124	0.490	-0.085
0.750	0.028	0.400	-3.696**	0.400	0.021	0.580	-0.096
0.850	0.079	0.490	-0.015	0.490	0.018	0.650	-0.033
0.900	0.154	0.580	0.000	0.580	-0.055	0.750	0.182
0.960	0.121	0.640	0.301	0.650	0.055	0.830	0.306
		0.750	0.178	0.750	0.253	0.900	0.363
		0.870	0.222	0.890	********	0.960	0.238
		0.930	0.221	0.930	0.238		
		0.960	0.142	0.960	-3.444**		
CN =	0.372		0.631		0.650		0.660

Table D-2. Continued.

Flight 195, Wing sweep = 26°, Time = 8-33-5-500, MINF = 0.708, Camber = 5/2, ALPT = 6.15, BETA = 0.07, QINF = 304.1, RNPU = 2.7E+06, CNWP = 0.3052

η = 0.93		0.76		0.59		0.40	
			Upper Surface				
x/c	CP	x/c	CP	x/c	CP	x/c	CP
0.020	0.076	0.000	0.795	0.000	-6.501**	0.010	-0.823
0.060	-0.202	0.020	-0.179	0.020	-0.311	0.020	-0.541
0.110	-0.346	0.040	-0.249	0.060	-1.163**	0.060	-0.837
0.200	-0.364	0.060	-0.476	0.090	-0.659	0.110	-0.915
0.230	-0.340	0.090	-0.527	0.110	-0.805	0.140	1.877**
0.400	-0.212	0.130	-0.688	0.130	-0.973	0.190	-6.370**
0.490	-0.211	0.150	-0.712	0.150	-0.640	0.250	-0.474
0.590	-0.216	0.200	-0.538	0.210	-0.649	0.400	-0.362
0.630	-0.207	0.250	-0.416	0.250	-0.474	0.490	-0.341
0.700	-0.232	0.260	-0.390	0.340	-0.424	0.580	-0.318
0.750	-0.194	0.280	-0.388	0.370	-0.397	0.650	-0.376
0.810	-0.210	0.290	-0.381	0.400	-0.377	0.700	-0.338
0.840	-0.207	0.310	-0.338	0.410	-0.363	0.750	-0.338
0.900	-0.117	0.320	-0.358	0.430	-0.377	0.800	-0.287
0.960	-0.011	0.340	-0.350	0.440	-0.369	0.830	-0.310
		0.350	-0.137**	0.460	-0.347	0.900	-0.182
		0.370	-0.335	0.490	-0.337	0.960	0.001
		0.380	-0.322	0.500	-0.327		
		0.400	-0.268	0.520	-0.326		
		0.410	-0.307	0.540	-0.334		
		0.430	-0.288	0.550	-0.297		
		0.440	-0.293	0.580	-0.247		
		0.460	-0.315	0.600	-0.362		
		0.470	-0.297	0.610	-0.264		
		0.490	-0.278	0.650	-3.683**		
		0.500	-0.291	0.700	-0.349		
		0.520	-0.279	0.750	-0.302		
		0.530	-0.270	0.820	-0.305		
		0.550	-0.295	0.890	-0.136		
		0.560	-0.298	0.900	-0.105		
		0.580	-0.243	0.960	-0.029		
		0.590	-0.293				
		0.600	-0.300				
		0.640	-3.524**				
		0.700	-0.299				
		0.750	-0.257				
		0.820	-3.695**				
		0.870	-0.204				
		0.930	-0.075				
		0.960	-0.025				
			Lower Surface				
0.020	-0.270	0.020	-0.238	0.020	-0.137	0.020	0.165**
0.110	-0.133	0.060	0.036	0.060	0.091	0.060	5.490**
0.230	0.015	0.090	-0.027	0.090	0.003	0.110	0.001
0.400	-0.024	0.120	-0.003	0.120	-0.118	0.250	-0.098
0.490	-0.063	0.200	0.047	0.200	0.003	0.400	-0.120
0.630	3.339**	0.260	-0.045	0.250	-0.064	0.490	-0.160
0.750	0.028	0.400	-3.712**	0.400	-0.094	0.580	-0.175
0.850	0.087	0.490	-0.079	0.490	-0.005	0.650	-0.068
0.900	0.140	0.580	-0.061	0.580	-0.136	0.750	0.161
0.960	0.141	0.640	0.250	0.650	0.013	0.830	0.279
		0.750	0.138	0.750	0.199	0.900	0.345
		0.870	0.208	0.890	********	0.960	0.266
		0.930	0.192	0.930	0.253		
		0.960	0.126	0.960	-3.711**		
CN =	0.212		0.365		0.397		0.408

Table D-2. Continued.

Flight 195, Wing sweep = 26°, Time = 8-33-27-500, MINF = 0.705, Camber = 5/2, ALPT = 7.22, BETA = -0.03, QINF = 300.8, RNPU = 2.7E+06, CNWP = 0.3432

η = 0.93		0.76		0.59		0.40	
			Upper Surface				
x/c	CP	*x/c*	CP	*x/c*	CP	*x/c*	CP
0.020	-0.133	0.000	0.866	0.000	-6.563**	0.010	-1.328
0.060	-0.342	0.020	-0.474	0.020	-0.549	0.020	-0.594
0.110	-0.442	0.040	-0.445	0.060	-1.294**	0.060	-1.168
0.200	-0.425	0.060	-0.656	0.090	-0.856	0.110	-0.955
0.230	-0.386	0.090	-0.703	0.110	-0.966	0.140	1.881**
0.400	-0.236	0.130	-0.881	0.130	-1.155	0.190	-6.431**
0.490	-0.216	0.150	-0.860	0.150	-0.787	0.250	-0.533
0.590	-0.232	0.200	-0.642	0.210	-0.704	0.400	-0.399
0.630	-0.237	0.250	-0.477	0.250	-0.529	0.490	-0.373
0.700	-0.252	0.260	-0.440	0.340	-0.465	0.580	-0.323
0.750	-0.229	0.280	-0.443	0.370	-0.454	0.650	-0.394
0.810	-0.241	0.290	-0.435	0.400	-0.423	0.700	-0.358
0.840	-0.231	0.310	-0.394	0.410	-0.389	0.750	-0.340
0.900	-0.139	0.320	-0.400	0.430	-0.417	0.800	-0.274
0.960	-0.038	0.340	-0.401	0.440	-0.396	0.830	-0.286
		0.350	-0.144**	0.460	-0.378	0.900	-0.138
		0.370	-0.370	0.490	-0.354	0.960	0.014
		0.380	-0.348	0.500	-0.360		
		0.400	-0.308	0.520	-0.369		
		0.410	-0.352	0.540	-0.364		
		0.430	-0.320	0.550	-0.343		
		0.440	-0.302	0.580	-0.301		
		0.460	-0.348	0.600	-0.382		
		0.470	-0.331	0.610	-0.265		
		0.490	-0.313	0.650	-3.715**		
		0.500	-0.285	0.700	-0.361		
		0.520	-0.296	0.750	-0.322		
		0.530	-0.292	0.820	-0.312		
		0.550	-0.306	0.890	-0.132		
		0.560	-0.317	0.900	-0.102		
		0.580	-0.278	0.960	-0.024		
		0.590	-0.323				
		0.600	-0.319				
		0.640	-3.554**				
		0.700	-0.319				
		0.750	-0.286				
		0.820	-3.727**				
		0.870	-0.215				
		0.930	-0.089				
		0.960	-0.016				
			Lower Surface				
0.020	-0.199	0.020	-0.047	0.020	0.050	0.020	0.354**
0.110	-0.065	0.060	0.130	0.060	0.192	0.060	5.559**
0.230	0.043	0.090	0.068	0.090	0.102	0.110	0.067
0.400	-0.026	0.120	0.051	0.120	-0.047	0.250	-0.044
0.490	-0.059	0.200	0.078	0.200	0.032	0.400	-0.069
0.630	3.385**	0.260	-0.001	0.250	0.004	0.490	-0.116
0.750	0.012	0.400	-3.744**	0.400	-0.060	0.580	-0.162
0.850	0.075	0.490	-0.059	0.490	-0.006	0.650	-0.051
0.900	0.137	0.580	-0.031	0.580	-0.113	0.750	0.167
0.960	0.125	0.640	0.275	0.650	0.022	0.830	0.277
		0.750	0.151	0.750	0.218	0.900	0.344
		0.870	0.219	0.890	********	0.960	0.251
		0.930	0.204	0.930	0.250		
		0.960	0.119	0.960	-3.743**		
CN =	0.257		0.451		0.474		0.465

Table D-2. Continued.

Flight 195, Wing sweep = 26°, Time = 8-33-43-500, MINF = 0.695, Camber = 5/2, ALPT = 8.05, BETA = -0.08, QINF = 291.9, RNPU = 2.7E+06, CNWP = 0.3907

η = 0.93		0.76		0.59		0.40	
			Upper Surface				
x/c	CP	*x/c*	CP	*x/c*	CP	*x/c*	CP
0.020	-0.347	0.000	0.854	0.000	-6.756**	0.010	-1.403
0.060	-0.448	0.020	-0.714	0.020	-0.818	0.020	-1.421
0.110	-0.471	0.040	-0.628	0.060	-1.475**	0.060	-1.217
0.200	-0.469	0.060	-0.826	0.090	-1.121	0.110	-1.031
0.230	-0.443	0.090	-0.832	0.110	-0.969	0.140	1.935**
0.400	-0.257	0.130	-1.015	0.130	-1.170	0.190	-6.620**
0.490	-0.236	0.150	-1.157	0.150	-1.153	0.250	-0.555
0.590	-0.234	0.200	-0.676	0.210	-0.756	0.400	-0.402
0.630	-0.240	0.250	-0.517	0.250	-0.582	0.490	-0.362
0.700	-0.266	0.260	-0.466	0.340	-0.487	0.580	-0.313
0.750	-0.246	0.280	-0.499	0.370	-0.474	0.650	-0.396
0.810	-0.246	0.290	-0.458	0.400	-0.428	0.700	-0.353
0.840	-0.229	0.310	-0.413	0.410	-0.408	0.750	-0.319
0.900	-0.140	0.320	-0.441	0.430	-0.421	0.800	-0.252
0.960	-0.045	0.340	-0.441	0.440	-0.399	0.830	-0.252
		0.350	-0.134**	0.460	-0.381	0.900	-0.119
		0.370	-0.402	0.490	-0.379	0.960	-0.002
		0.380	-0.364	0.500	-0.372		
		0.400	-0.354	0.520	-0.372		
		0.410	-0.364	0.540	-0.374		
		0.430	-0.333	0.550	-0.332		
		0.440	-0.312	0.580	-0.311		
		0.460	-0.362	0.600	-0.372		
		0.470	-0.353	0.610	-0.286		
		0.490	-0.326	0.650	-3.820**		
		0.500	-0.313	0.700	-0.353		
		0.520	-0.304	0.750	-0.323		
		0.530	-0.296	0.820	-0.291		
		0.550	-0.307	0.890	-0.116		
		0.560	-0.318	0.900	-0.106		
		0.580	-0.278	0.960	-0.027		
		0.590	-0.324				
		0.600	-0.325				
		0.640	-3.654**				
		0.700	-0.313				
		0.750	-0.275				
		0.820	-3.833**				
		0.870	-0.206				
		0.930	-0.083				
		0.960	-0.026				
			Lower Surface				
0.020	-0.031	0.020	0.131	0.020	0.205	0.020	0.463**
0.110	-0.011	0.060	0.223	0.060	0.260	0.060	5.739**
0.230	0.096	0.090	0.136	0.090	0.180	0.110	0.172
0.400	0.008	0.120	0.123	0.120	0.004	0.250	0.004
0.490	-0.037	0.200	0.100	0.200	0.055	0.400	-0.039
0.630	3.497**	0.260	0.038	0.250	0.035	0.490	-0.095
0.750	0.025	0.400	-3.851**	0.400	-0.037	0.580	-0.131
0.850	0.055	0.490	-0.032	0.490	-0.009	0.650	-0.044
0.900	0.136	0.580	-0.008	0.580	-0.086	0.750	0.166
0.960	0.121	0.640	0.295	0.650	0.024	0.830	0.279
		0.750	0.147	0.750	0.225	0.900	0.336
		0.870	0.225	0.890	********	0.960	0.241
		0.930	0.207	0.930	0.244		
		0.960	0.123	0.960	-3.850**		
CN =	0.306		0.519		0.541		0.514

Table D-2. Continued.

Flight 195, Wing sweep = 26°, Time = 8-34-2-000, MINF = 0.715, Camber = 5/2, ALPT = 9.12, BETA = 0.07, QINF = 312.3, RNPU = 2.8E+06, CNWP = 0.4406

η = 0.93		0.76		0.59		0.40	
			Upper Surface				
x/c	CP	*x/c*	CP	*x/c*	CP	*x/c*	CP
0.020	-0.667	0.000	0.784	0.000	-6.352**	0.010	-1.469
0.060	-0.609	0.020	-0.984	0.020	-1.210	0.020	-1.492
0.110	-0.631	0.040	-0.738	0.060	-1.453**	0.060	-1.477
0.200	-0.534	0.060	-1.049	0.090	-1.295	0.110	-1.584
0.230	-0.503	0.090	-1.180	0.110	-1.368	0.140	1.795**
0.400	-0.287	0.130	-1.259	0.130	-1.485	0.190	-6.224**
0.490	-0.258	0.150	-1.336	0.150	-1.417	0.250	-0.568
0.590	-0.265	0.200	-1.294	0.210	-1.515	0.400	-0.398
0.630	-0.274	0.250	-0.511	0.250	-0.630	0.490	-0.361
0.700	-0.293	0.260	-0.450	0.340	-0.465	0.580	-0.308
0.750	-0.255	0.280	-0.457	0.370	-0.469	0.650	-0.373
0.810	-0.270	0.290	-0.459	0.400	-0.437	0.700	-0.322
0.840	-0.275	0.310	-0.429	0.410	-0.400	0.750	-0.294
0.900	-0.173	0.320	-0.431	0.430	-0.447	0.800	-0.251
0.960	-0.079	0.340	-0.438	0.440	-0.423	0.830	-0.209
		0.350	-0.121**	0.460	-0.390	0.900	-0.094
		0.370	-0.402	0.490	-0.364	0.960	-0.035
		0.380	-0.401	0.500	-0.371		
		0.400	-0.347	0.520	-0.376		
		0.410	-0.396	0.540	-0.386		
		0.430	-0.352	0.550	-0.355		
		0.440	-0.331	0.580	-0.320		
		0.460	-0.380	0.600	-0.392		
		0.470	-0.363	0.610	-0.276		
		0.490	-0.341	0.650	-3.607**		
		0.500	-0.334	0.700	-0.349		
		0.520	-0.331	0.750	-0.328		
		0.530	-0.312	0.820	-0.280		
		0.550	-0.326	0.890	-0.103		
		0.560	-0.346	0.900	-0.094		
		0.580	-0.299	0.960	0.000		
		0.590	-0.339				
		0.600	-0.341				
		0.640	-3.453**				
		0.700	-0.326				
		0.750	-0.291				
		0.820	-3.619**				
		0.870	-0.208				
		0.930	-0.083				
		0.960	-0.010				
			Lower Surface				
0.020	0.077	0.020	0.278	0.020	0.331	0.020	0.574**
0.110	0.027	0.060	0.288	0.060	0.350	0.060	5.327**
0.230	0.130	0.090	0.214	0.090	0.248	0.110	0.194
0.400	0.023	0.120	0.191	0.120	0.075	0.250	0.049
0.490	-0.019	0.200	0.136	0.200	0.109	0.400	0.010
0.630	3.232**	0.260	0.075	0.250	0.080	0.490	-0.056
0.750	0.024	0.400	-3.636**	0.400	-0.002	0.580	-0.118
0.850	0.049	0.490	-0.015	0.490	-0.004	0.650	-0.029
0.900	0.129	0.580	0.000	0.580	-0.075	0.750	0.178
0.960	0.109	0.640	0.287	0.650	0.041	0.830	0.296
		0.750	0.158	0.750	0.229	0.900	0.350
		0.870	0.224	0.890	********	0.960	0.243
		0.930	0.223	0.930	0.247		
		0.960	0.123	0.960	-3.635**		
CN =	0.372		0.618		0.635		0.607

Table D-2. Continued.

Flight 195, Wing sweep = 26°, Time = 8-34-8-500, MINF = 0.715, Camber = 5/2, ALPT = 10.07, BETA = -0.08, QINF = 311.4, RNPU = 2.8E+06, CNWP = 0.3911

η = 0.93		0.76		0.59		0.40	
			Upper Surface				
x/c	CP	*x/c*	CP	*x/c*	CP	*x/c*	CP
0.020	-1.161	0.000	0.659	0.000	-6.356**	0.010	-1.671
0.060	-0.740	0.020	-1.366	0.020	-1.399	0.020	-1.659
0.110	-0.688	0.040	-1.115	0.060	-1.561**	0.060	-1.644
0.200	-0.561	0.060	-1.216	0.090	-1.430	0.110	-1.709
0.230	-0.523	0.090	-1.237	0.110	-1.511	0.140	1.817**
0.400	-0.310	0.130	-1.423	0.130	-1.616	0.190	-6.228**
0.490	-0.270	0.150	-1.489	0.150	-1.542	0.250	-0.841
0.590	-0.292	0.200	-1.487	0.210	-1.194	0.400	-0.373
0.630	-0.301	0.250	-0.675	0.250	-0.871	0.490	-0.335
0.700	-0.310	0.260	-0.545	0.340	-0.512	0.580	-0.300
0.750	-0.304	0.280	-0.476	0.370	-0.487	0.650	-0.351
0.810	-0.314	0.290	-0.417	0.400	-0.432	0.700	-0.317
0.840	-0.305	0.310	-0.380	0.410	-0.409	0.750	-0.288
0.900	-0.202	0.320	-0.409	0.430	-0.435	0.800	-0.245
0.960	-0.100	0.340	-0.409	0.440	-0.400	0.830	-0.201
		0.350	-0.107**	0.460	-0.394	0.900	-0.112
		0.370	-0.404	0.490	-0.387	0.960	-0.062
		0.380	-0.380	0.500	-0.386		
		0.400	-0.328	0.520	-0.378		
		0.410	-0.380	0.540	-0.387		
		0.430	-0.365	0.550	-0.357		
		0.440	-0.349	0.580	-0.304		
		0.460	-0.388	0.600	-0.368		
		0.470	-0.377	0.610	-0.264		
		0.490	-0.347	0.650	-3.604**		
		0.500	-0.341	0.700	-0.309		
		0.520	-0.325	0.750	-0.288		
		0.530	-0.317	0.820	-0.229		
		0.550	-0.350	0.890	-0.077		
		0.560	-0.362	0.900	-0.061		
		0.580	-0.308	0.960	-0.022		
		0.590	-0.345				
		0.600	-0.348				
		0.640	-3.449**				
		0.700	-0.324				
		0.750	-0.296				
		0.820	-3.616**				
		0.870	-0.206				
		0.930	-0.081				
		0.960	-0.021				
			Lower Surface				
0.020	0.189	0.020	0.359	0.020	0.437	0.020	0.629**
0.110	0.058	0.060	0.349	0.060	0.389	0.060	5.355**
0.230	0.148	0.090	0.257	0.090	0.285	0.110	0.224
0.400	0.030	0.120	0.216	0.120	0.111	0.250	0.076
0.490	-0.006	0.200	0.174	0.200	0.122	0.400	0.034
0.630	3.254**	0.260	0.116	0.250	0.116	0.490	-0.028
0.750	0.020	0.400	-3.633**	0.400	0.022	0.580	-0.085
0.850	0.059	0.490	-0.008	0.490	0.013	0.650	0.006
0.900	0.121	0.580	0.017	0.580	-0.055	0.750	0.192
0.960	0.079	0.640	0.296	0.650	0.047	0.830	0.288
		0.750	0.158	0.750	0.237	0.900	0.344
		0.870	0.215	0.890	********	0.960	0.226
		0.930	0.209	0.930	0.246		
		0.960	0.116	0.960	-3.632**		
CN =	0.413		0.684		0.664		0.680

Table D-2. Continued.

Flight 195, Wing sweep = 26°, Time = 8-34-12-500, MINF = 0.703, Camber = 5/2, ALPT = 11.06, BETA = 0.05, QINF = 299.5, RNPU = 2.7E+06, CNWP = 0.3610

η = 0.93		0.76		0.59		0.40	
			Upper Surface				
x/c	CP	*x/c*	CP	*x/c*	CP	*x/c*	CP
0.020	-1.410	0.000	0.534	0.000	-6.599**	0.010	-1.812
0.060	-1.213	0.020	-1.616	0.020	-1.644	0.020	-1.842
0.110	-0.695	0.040	-1.405	0.060	-1.770**	0.060	-1.827
0.200	-0.627	0.060	-1.440	0.090	-1.692	0.110	-1.905
0.230	-0.571	0.090	-1.503	0.110	-1.702	0.140	1.905**
0.400	-0.328	0.130	-1.632	0.130	-1.138	0.190	-6.466**
0.490	-0.283	0.150	-1.662	0.150	-0.994	0.250	-0.851
0.590	-0.306	0.200	-1.641	0.210	-1.044	0.400	-0.358
0.630	-0.319	0.250	-0.718	0.250	-0.882	0.490	-0.339
0.700	-0.327	0.260	-0.563	0.340	-0.708	0.580	-0.306
0.750	-0.304	0.280	-0.509	0.370	-0.631	0.650	-0.325
0.810	-0.318	0.290	-0.442	0.400	-0.556	0.700	-0.299
0.840	-0.330	0.310	-0.389	0.410	-0.548	0.750	-0.276
0.900	-0.218	0.320	-0.402	0.430	-0.536	0.800	-0.271
0.960	-0.138	0.340	-0.416	0.440	-0.496	0.830	-0.172
		0.350	-0.091**	0.460	-0.460	0.900	-0.154
		0.370	-0.411	0.490	-0.438	0.960	-0.137
		0.380	-0.400	0.500	-0.416		
		0.400	-0.342	0.520	-0.418		
		0.410	-0.389	0.540	-0.421		
		0.430	-0.364	0.550	-0.372		
		0.440	-0.342	0.580	-0.325		
		0.460	-0.388	0.600	-0.374		
		0.470	-0.376	0.610	-0.266		
		0.490	-0.358	0.650	-3.738**		
		0.500	-0.349	0.700	-0.277		
		0.520	-0.321	0.750	-0.237		
		0.530	-0.328	0.820	-0.178		
		0.550	-0.336	0.890	-0.107		
		0.560	-0.340	0.900	-0.107		
		0.580	-0.290	0.960	-0.099		
		0.590	-0.341				
		0.600	-0.347				
		0.640	-3.576**				
		0.700	-0.306				
		0.750	-0.269				
		0.820	-3.750**				
		0.870	-0.176				
		0.930	-0.071				
		0.960	-0.031				
			Lower Surface				
0.020	0.255	0.020	0.457	0.020	0.511	0.020	0.729**
0.110	0.118	0.060	0.417	0.060	0.453	0.060	5.576**
0.230	0.179	0.090	0.312	0.090	0.344	0.110	0.289
0.400	0.048	0.120	0.268	0.120	0.182	0.250	0.130
0.490	-0.011	0.200	0.190	0.200	0.170	0.400	0.067
0.630	3.392**	0.260	0.159	0.250	0.170	0.490	-0.012
0.750	0.026	0.400	-3.768**	0.400	0.028	0.580	-0.073
0.850	0.044	0.490	0.005	0.490	0.019	0.650	-0.007
0.900	0.102	0.580	0.016	0.580	-0.041	0.750	0.199
0.960	0.094	0.640	0.308	0.650	0.059	0.830	0.292
		0.750	0.142	0.750	0.219	0.900	0.337
		0.870	0.209	0.890	********	0.960	0.197
		0.930	0.201	0.930	0.205		
		0.960	0.112	0.960	-3.766**		
CN =	0.478		0.743		0.686		0.734

Table D-2. Continued.

Flight 195, Wing sweep = 26°, Time = 8-34-26-000, MINF = 0.697, Camber = 5/2, ALPT = 11.27, BETA = 0.05, QINF = 297.5, RNPU = 2.7E+06, CNWP = 0.3728

η = 0.93		0.76		0.59		0.40	
			Upper Surface				
x/c	CP	*x/c*	CP	*x/c*	CP	*x/c*	CP
0.020	-1.478	0.000	0.502	0.000	-6.668**	0.010	-1.848
0.060	-1.333	0.020	-1.705	0.020	-1.715	0.020	-1.908
0.110	-0.722	0.040	-1.484	0.060	-1.761**	0.060	-1.878
0.200	-0.640	0.060	-1.491	0.090	-1.731	0.110	-1.979
0.230	-0.548	0.090	-1.568	0.110	-1.618	0.140	1.921**
0.400	-0.349	0.130	-1.668	0.130	-1.133	0.190	-6.535**
0.490	-0.317	0.150	-1.718	0.150	-1.003	0.250	-0.782
0.590	-0.322	0.200	-1.437	0.210	-1.062	0.400	-0.371
0.630	-0.336	0.250	-0.681	0.250	-0.899	0.490	-0.357
0.700	-0.333	0.260	-0.537	0.340	-0.725	0.580	-0.279
0.750	-0.313	0.280	-0.481	0.370	-0.640	0.650	-0.329
0.810	-0.308	0.290	-0.447	0.400	-0.564	0.700	-0.308
0.840	-0.321	0.310	-0.412	0.410	-0.578	0.750	-0.288
0.900	-0.233	0.320	-0.433	0.430	-0.581	0.800	-0.265
0.960	-0.128	0.340	-0.444	0.440	-0.536	0.830	-0.212
		0.350	-0.108**	0.460	-0.496	0.900	-0.151
		0.370	-0.421	0.490	-0.466	0.960	-0.149
		0.380	-0.404	0.500	-0.449		
		0.400	-0.352	0.520	-0.458		
		0.410	-0.392	0.540	-0.434		
		0.430	-0.372	0.550	-0.396		
		0.440	-0.356	0.580	-0.355		
		0.460	-0.387	0.600	-0.399		
		0.470	-0.389	0.610	-0.278		
		0.490	-0.346	0.650	-3.788**		
		0.500	-0.347	0.700	-0.282		
		0.520	-0.327	0.750	-0.274		
		0.530	-0.330	0.820	-0.216		
		0.550	-0.335	0.890	-0.143		
		0.560	-0.347	0.900	-0.113		
		0.580	-0.288	0.960	-0.092		
		0.590	-0.345				
		0.600	-0.341				
		0.640	-3.626**				
		0.700	-0.304				
		0.750	-0.275				
		0.820	-3.801**				
		0.870	-0.170				
		0.930	-0.064				
		0.960	-0.027				
			Lower Surface				
0.020	0.256	0.020	0.488	0.020	0.519	0.020	0.742**
0.110	0.129	0.060	0.416	0.060	0.472	0.060	5.589**
0.230	0.173	0.090	0.338	0.090	0.374	0.110	0.294
0.400	0.030	0.120	0.266	0.120	0.164	0.250	0.130
0.490	0.007	0.200	0.199	0.200	0.153	0.400	0.075
0.630	3.390**	0.260	0.150	0.250	0.164	0.490	0.014
0.750	0.012	0.400	-3.818**	0.400	0.037	0.580	-0.060
0.850	0.049	0.490	0.013	0.490	0.013	0.650	0.004
0.900	0.121	0.580	0.020	0.580	-0.048	0.750	0.190
0.960	0.090	0.640	0.299	0.650	0.048	0.830	0.297
		0.750	0.147	0.750	0.231	0.900	0.343
		0.870	0.220	0.890	********	0.960	0.188
		0.930	0.180	0.930	0.207		
		0.960	0.094	0.960	-3.817**		
CN =	0.494		0.743		0.711		0.744

Table D-2. Continued.

Flight 195, Wing sweep = 26°, Time = 8-34-33-500, MINF = 0.697, Camber = 5/2, ALPT = 11.88, BETA = 0.13, QINF = 301.7, RNPU = 2.7E+06, CNWP = 0.3778

η = 0.93		0.76		0.59		0.40	
			Upper Surface				
x/c	CP	*x/c*	CP	*x/c*	CP	*x/c*	CP
0.020	-1.618	0.000	0.425	0.000	-6.623**	0.010	-1.952
0.060	-1.503	0.020	-1.785	0.020	-1.845	0.020	-1.976
0.110	-0.769	0.040	-1.610	0.060	-1.874**	0.060	-2.003
0.200	-0.634	0.060	-1.644	0.090	-1.300	0.110	-2.043
0.230	-0.586	0.090	-1.656	0.110	-1.208	0.140	1.871**
0.400	-0.356	0.130	-1.698	0.130	-1.136	0.190	-6.491**
0.490	-0.313	0.150	-1.796	0.150	-0.986	0.250	-0.510
0.590	-0.322	0.200	-1.176	0.210	-1.027	0.400	-0.376
0.630	-0.332	0.250	-0.674	0.250	-0.875	0.490	-0.365
0.700	-0.332	0.260	-0.525	0.340	-0.764	0.580	-0.290
0.750	-0.309	0.280	-0.500	0.370	-0.689	0.650	-0.331
0.810	-0.331	0.290	-0.457	0.400	-0.632	0.700	-0.293
0.840	-0.335	0.310	-0.415	0.410	-0.622	0.750	-0.274
0.900	-0.228	0.320	-0.420	0.430	-0.639	0.800	-0.294
0.960	-0.137	0.340	-0.441	0.440	-0.601	0.830	-0.208
		0.350	-0.101**	0.460	-0.568	0.900	-0.198
		0.370	-0.411	0.490	-0.544	0.960	-0.194
		0.380	-0.401	0.500	-0.518		
		0.400	-0.361	0.520	-0.518		
		0.410	-0.390	0.540	-0.487		
		0.430	-0.382	0.550	-0.455		
		0.440	-0.337	0.580	-0.409		
		0.460	-0.385	0.600	-0.444		
		0.470	-0.373	0.610	-0.305		
		0.490	-0.345	0.650	-3.782**		
		0.500	-0.332	0.700	-0.317		
		0.520	-0.326	0.750	-0.299		
		0.530	-0.301	0.820	-0.227		
		0.550	-0.311	0.890	-0.155		
		0.560	-0.319	0.900	-0.142		
		0.580	-0.275	0.960	-0.131		
		0.590	-0.313				
		0.600	-0.306				
		0.640	-3.622**				
		0.700	-0.249				
		0.750	-0.221				
		0.820	-3.795**				
		0.870	-0.136				
		0.930	-0.056				
		0.960	-0.023				
			Lower Surface				
0.020	0.353	0.020	0.552	0.020	0.577	0.020	0.777**
0.110	0.144	0.060	0.458	0.060	0.490	0.060	5.465**
0.230	0.200	0.090	0.360	0.090	0.397	0.110	0.321
0.400	0.055	0.120	0.303	0.120	0.207	0.250	0.168
0.490	0.003	0.200	0.211	0.200	0.182	0.400	0.085
0.630	3.296**	0.260	0.180	0.250	0.202	0.490	0.025
0.750	0.018	0.400	-3.812**	0.400	0.048	0.580	-0.043
0.850	0.051	0.490	0.031	0.490	0.027	0.650	0.026
0.900	0.110	0.580	0.020	0.580	-0.033	0.750	0.198
0.960	0.085	0.640	0.306	0.650	0.058	0.830	0.290
		0.750	0.139	0.750	0.210	0.900	0.329
		0.870	0.204	0.890	********	0.960	0.181
		0.930	0.174	0.930	0.215		
		0.960	0.067	0.960	-3.811**		
CN =	0.522		0.735		0.712		0.744

Table D-2. Continued.

Flight 195, Wing sweep = 26°, Time = 8-35-52-000, MINF = 0.700, Camber = 5/6, ALPT = 5.12, BETA = -0.48, QINF = 297.3, RNPU = 2.7E+06, CNWP = 0.3726

η = 0.93		0.76		0.59		0.40	
			Upper Surface				
x/c	CP	*x/c*	CP	*x/c*	CP	*x/c*	CP
0.020	0.209	0.000	0.692	0.000	-6.652**	0.010	-0.516
0.060	-0.113	0.020	-0.014	0.020	-0.104	0.020	-0.348
0.110	-0.280	0.040	-0.115	0.060	-1.116**	0.060	-0.673
0.200	-0.346	0.060	-0.334	0.090	-0.551	0.110	-0.789
0.230	-0.315	0.090	-0.438	0.110	-0.677	0.140	1.947**
0.400	-0.227	0.130	-0.577	0.130	-0.784	0.190	-6.518**
0.490	-0.225	0.150	-0.631	0.150	-0.559	0.250	-0.450
0.590	-0.284	0.200	-0.487	0.210	-0.588	0.400	-0.364
0.630	-0.309	0.250	-0.385	0.250	-0.443	0.490	-0.364
0.700	-0.385	0.260	-0.357	0.340	-0.421	0.580	-0.355
0.750	-0.455	0.280	-0.375	0.370	-0.409	0.650	-0.435
0.810	-0.454	0.290	-0.376	0.400	-0.380	0.700	-0.439
0.840	-0.446	0.310	-0.345	0.410	-0.375	0.750	-0.517
0.900	-0.206	0.320	-0.356	0.430	-0.411	0.800	-0.524
0.960	-0.063	0.340	-0.366	0.440	-0.387	0.830	-0.542
		0.350	-0.148**	0.460	-0.375	0.900	-0.204
		0.370	-0.341	0.490	-0.362	0.960	-0.009
		0.380	-0.333	0.500	-0.384		
		0.400	-0.293	0.520	-0.390		
		0.410	-0.343	0.540	-0.399		
		0.430	-0.316	0.550	-0.378		
		0.440	-0.299	0.580	-0.348		
		0.460	-0.358	0.600	-0.441		
		0.470	-0.362	0.610	-0.341		
		0.490	-0.333	0.650	-3.769**		
		0.500	-0.329	0.700	-0.498		
		0.520	-0.319	0.750	-0.506		
		0.530	-0.326	0.820	-0.560		
		0.550	-0.345	0.890	-0.184		
		0.560	-0.371	0.900	-0.132		
		0.580	-0.335	0.960	-0.036		
		0.590	-0.389				
		0.600	-0.397				
		0.640	-3.606**				
		0.700	-0.506				
		0.750	-0.590				
		0.820	-3.782**				
		0.870	-0.343				
		0.930	-0.141				
		0.960	-0.056				
			Lower Surface				
0.020	-0.388	0.020	-0.374	0.020	-0.262	0.020	0.016**
0.110	-0.135	0.060	-0.017	0.060	0.026	0.060	5.615**
0.230	0.020	0.090	-0.052	0.090	-0.040	0.110	-0.027
0.400	0.004	0.120	-0.019	0.120	-0.177	0.250	-0.113
0.490	-0.007	0.200	0.036	0.200	-0.003	0.400	-0.091
0.630	3.415**	0.260	-0.026	0.250	-0.044	0.490	-0.113
0.750	0.115	0.400	-3.799**	0.400	-0.063	0.580	-0.104
0.850	0.175	0.490	-0.018	0.490	0.016	0.650	0.035
0.900	0.235	0.580	0.054	0.580	-0.037	0.750	0.266
0.960	0.174	0.640	0.389	0.650	0.151	0.830	0.368
		0.750	0.230	0.750	0.340	0.900	0.434
		0.870	0.352	0.890	********	0.960	0.303
		0.930	0.291	0.930	0.341		
		0.960	0.180	0.960	-3.798**		
CN =	0.309		0.479		0.487		0.466

Table D-2. Continued.

Flight 195, Wing sweep = 26°, Time = 8-35-59-000, MINF = 0.701, Camber = 5/6, ALPT = 6.97, BETA = -0.37, QINF = 297.2, RNPU = 2.7E+06, CNWP = 0.4529

η = 0.93		0.76		0.59		0.40	
			Upper Surface				
x/c	CP	*x/c*	CP	*x/c*	CP	*x/c*	CP
0.020	-0.130	0.000	0.855	0.000	-6.644**	0.010	-1.316
0.060	-0.336	0.020	-0.452	0.020	-0.542	0.020	-0.658
0.110	-0.431	0.040	-0.436	0.060	-1.345**	0.060	-1.132
0.200	-0.441	0.060	-0.667	0.090	-0.848	0.110	-0.978
0.230	-0.438	0.090	-0.718	0.110	-0.986	0.140	1.920**
0.400	-0.279	0.130	-0.910	0.130	-1.165	0.190	-6.511**
0.490	-0.260	0.150	-0.886	0.150	-0.785	0.250	-0.553
0.590	-0.321	0.200	-0.666	0.210	-0.731	0.400	-0.424
0.630	-0.346	0.250	-0.507	0.250	-0.559	0.490	-0.412
0.700	-0.424	0.260	-0.472	0.340	-0.497	0.580	-0.404
0.750	-0.500	0.280	-0.492	0.370	-0.487	0.650	-0.472
0.810	-0.513	0.290	-0.476	0.400	-0.451	0.700	-0.472
0.840	-0.500	0.310	-0.430	0.410	-0.444	0.750	-0.537
0.900	-0.245	0.320	-0.442	0.430	-0.479	0.800	-0.493
0.960	-0.111	0.340	-0.448	0.440	-0.456	0.830	-0.514
		0.350	-0.154**	0.460	-0.434	0.900	-0.158
		0.370	-0.415	0.490	-0.412	0.960	-0.024
		0.380	-0.409	0.500	-0.432		
		0.400	-0.360	0.520	-0.450		
		0.410	-0.409	0.540	-0.445		
		0.430	-0.391	0.550	-0.418		
		0.440	-0.357	0.580	-0.391		
		0.460	-0.421	0.600	-0.475		
		0.470	-0.405	0.610	-0.388		
		0.490	-0.382	0.650	-3.761**		
		0.500	-0.379	0.700	-0.531		
		0.520	-0.379	0.750	-0.533		
		0.530	-0.376	0.820	-0.559		
		0.550	-0.408	0.890	-0.167		
		0.560	-0.411	0.900	-0.117		
		0.580	-0.372	0.960	-0.030		
		0.590	-0.435				
		0.600	-0.437				
		0.640	-3.598**				
		0.700	-0.540				
		0.750	-0.616				
		0.820	-3.773**				
		0.870	-0.355				
		0.930	-0.150				
		0.960	-0.065				
			Lower Surface				
0.020	-0.173	0.020	-0.019	0.020	0.063	0.020	0.348**
0.110	-0.038	0.060	0.149	0.060	0.209	0.060	5.627**
0.230	0.080	0.090	0.091	0.090	0.122	0.110	0.086
0.400	0.017	0.120	0.092	0.120	-0.054	0.250	-0.016
0.490	0.017	0.200	0.104	0.200	0.054	0.400	-0.019
0.630	3.426**	0.260	0.043	0.250	0.040	0.490	-0.058
0.750	0.105	0.400	-3.791**	0.400	-0.002	0.580	-0.053
0.850	0.158	0.490	0.022	0.490	0.026	0.650	0.067
0.900	0.225	0.580	0.093	0.580	0.002	0.750	0.286
0.960	0.143	0.640	0.402	0.650	0.168	0.830	0.378
		0.750	0.240	0.750	0.354	0.900	0.450
		0.870	0.334	0.890	********	0.960	0.310
		0.930	0.294	0.930	0.343		
		0.960	0.178	0.960	-3.790**		
CN =	0.404		0.620		0.616		0.590

Table D-2. Continued.

Flight 195, Wing sweep = 26°, Time = 8-36-15-000, MINF = 0.705, Camber = 5/6, ALPT = 8.03, BETA = -0.11, QINF = 296.8, RNPU = 2.7E+06, CNWP = 0.4727

η = 0.93		0.76		0.59		0.40	
			Upper Surface				
x/c	CP	*x/c*	CP	*x/c*	CP	*x/c*	CP
0.020	-0.393	0.000	0.772	0.000	-6.617**	0.010	-1.332
0.060	-0.461	0.020	-0.808	0.020	-0.878	0.020	-1.377
0.110	-0.516	0.040	-0.651	0.060	-1.424**	0.060	-1.169
0.200	-0.487	0.060	-0.848	0.090	-0.938	0.110	-1.072
0.230	-0.450	0.090	-0.853	0.110	-1.025	0.140	1.929**
0.400	-0.288	0.130	-1.018	0.130	-1.197	0.190	-6.483**
0.490	-0.265	0.150	-1.165	0.150	-1.183	0.250	-0.562
0.590	-0.326	0.200	-0.688	0.210	-0.745	0.400	-0.425
0.630	-0.347	0.250	-0.541	0.250	-0.575	0.490	-0.405
0.700	-0.418	0.260	-0.493	0.340	-0.530	0.580	-0.377
0.750	-0.486	0.280	-0.504	0.370	-0.497	0.650	-0.442
0.810	-0.477	0.290	-0.488	0.400	-0.460	0.700	-0.434
0.840	-0.494	0.310	-0.446	0.410	-0.453	0.750	-0.472
0.900	-0.263	0.320	-0.453	0.430	-0.495	0.800	-0.408
0.960	-0.133	0.340	-0.463	0.440	-0.450	0.830	-0.423
		0.350	-0.142**	0.460	-0.436	0.900	-0.160
		0.370	-0.427	0.490	-0.406	0.960	-0.025
		0.380	-0.408	0.500	-0.436		
		0.400	-0.365	0.520	-0.444		
		0.410	-0.412	0.540	-0.439		
		0.430	-0.396	0.550	-0.412		
		0.440	-0.366	0.580	-0.367		
		0.460	-0.427	0.600	-0.462		
		0.470	-0.406	0.610	-0.367		
		0.490	-0.384	0.650	-3.730**		
		0.500	-0.378	0.700	-0.507		
		0.520	-0.373	0.750	-0.501		
		0.530	-0.366	0.820	-0.507		
		0.550	-0.402	0.890	-0.148		
		0.560	-0.411	0.900	-0.105		
		0.580	-0.366	0.960	-0.045		
		0.590	-0.420				
		0.600	-0.426				
		0.640	-3.567**				
		0.700	-0.512				
		0.750	-0.571				
		0.820	-3.742**				
		0.870	-0.331				
		0.930	-0.132				
		0.960	-0.066				
			Lower Surface				
0.020	0.006	0.020	0.174	0.020	0.244	0.020	0.510**
0.110	0.027	0.060	0.250	0.060	0.296	0.060	5.670**
0.230	0.117	0.090	0.175	0.090	0.204	0.110	0.154
0.400	0.050	0.120	0.148	0.120	0.022	0.250	0.041
0.490	0.024	0.200	0.140	0.200	0.092	0.400	0.032
0.630	3.466**	0.260	0.093	0.250	0.099	0.490	-0.006
0.750	0.101	0.400	-3.760**	0.400	0.036	0.580	-0.015
0.850	0.142	0.490	0.040	0.490	0.018	0.650	0.089
0.900	0.202	0.580	0.092	0.580	0.028	0.750	0.283
0.960	0.133	0.640	0.403	0.650	0.175	0.830	0.368
		0.750	0.230	0.750	0.338	0.900	0.436
		0.870	0.313	0.890	********	0.960	0.296
		0.930	0.271	0.930	0.327		
		0.960	0.156	0.960	-3.759**		
CN =	0.438		0.670		0.657		0.632

Table D-2. Continued.

Flight 195, Wing sweep = 26°, Time = 8-36-33-000, MINF = 0.721, Camber = 5/6, ALPT = 9.17, BETA = 0.15, QINF = 332.1, RNPU = 2.9E+06, CNWP = 0.4460

η = 0.93		0.76		0.59		0.40	
			Upper Surface				
x/c	CP	*x/c*	CP	*x/c*	CP	*x/c*	CP
0.020	-0.679	0.000	0.781	0.000	-6.088**	0.010	-1.487
0.060	-0.723	0.020	-0.948	0.020	-1.195	0.020	-1.458
0.110	-0.666	0.040	-0.692	0.060	-1.451**	0.060	-1.482
0.200	-0.556	0.060	-1.042	0.090	-1.300	0.110	-1.561
0.230	-0.529	0.090	-1.166	0.110	-1.344	0.140	1.728**
0.400	-0.352	0.130	-1.261	0.130	-1.498	0.190	-5.968**
0.490	-0.328	0.150	-1.367	0.150	-1.418	0.250	-0.902
0.590	-0.373	0.200	-1.370	0.210	-1.559	0.400	-0.441
0.630	-0.422	0.250	-0.804	0.250	-0.920	0.490	-0.432
0.700	-0.479	0.260	-0.648	0.340	-0.508	0.580	-0.392
0.750	-0.582	0.280	-0.563	0.370	-0.466	0.650	-0.437
0.810	-0.598	0.290	-0.472	0.400	-0.443	0.700	-0.444
0.840	-0.610	0.310	-0.401	0.410	-0.454	0.750	-0.474
0.900	-0.315	0.320	-0.417	0.430	-0.504	0.800	-0.402
0.960	-0.176	0.340	-0.422	0.440	-0.448	0.830	-0.375
		0.350	-0.106**	0.460	-0.448	0.900	-0.161
		0.370	-0.416	0.490	-0.449	0.960	-0.047
		0.380	-0.408	0.500	-0.468		
		0.400	-0.387	0.520	-0.454		
		0.410	-0.431	0.540	-0.473		
		0.430	-0.422	0.550	-0.450		
		0.440	-0.382	0.580	-0.403		
		0.460	-0.460	0.600	-0.494		
		0.470	-0.430	0.610	-0.422		
		0.490	-0.423	0.650	-3.508**		
		0.500	-0.414	0.700	-0.523		
		0.520	-0.395	0.750	-0.534		
		0.530	-0.398	0.820	-0.507		
		0.550	-0.427	0.890	-0.126		
		0.560	-0.448	0.900	-0.097		
		0.580	-0.402	0.960	-0.036		
		0.590	-0.463				
		0.600	-0.478				
		0.640	-3.362**				
		0.700	-0.575				
		0.750	-0.658				
		0.820	-3.519**				
		0.870	-0.333				
		0.930	-0.147				
		0.960	-0.088				
			Lower Surface				
0.020	0.095	0.020	0.375	0.020	0.352	0.020	0.592**
0.110	0.034	0.060	0.308	0.060	0.369	0.060	4.893**
0.230	0.170	0.090	0.252	0.090	0.265	0.110	0.201
0.400	0.059	0.120	0.233	0.120	0.082	0.250	0.084
0.490	0.035	0.200	0.175	0.200	0.146	0.400	0.043
0.630	2.923**	0.260	0.134	0.250	0.123	0.490	-0.005
0.750	0.104	0.400	-3.534**	0.400	0.023	0.580	-0.002
0.850	0.134	0.490	0.064	0.490	0.037	0.650	0.094
0.900	0.213	0.580	0.090	0.580	0.003	0.750	0.314
0.960	0.136	0.640	0.406	0.650	0.164	0.830	0.386
		0.750	0.251	0.750	0.063	0.900	0.466
		0.870	0.329	0.890	********	0.960	0.318
		0.930	0.286	0.930	0.335		
		0.960	0.170	0.960	-3.533**		
CN =	0.538		0.797		0.740		0.774

Table D-2. Continued.

Flight 195, Wing sweep = 26°, Time = 8-36-45-500, MINF = 0.692, Camber = 5/6, ALPT = 11.00, BETA = 0.05, QINF = 313.4, RNPU = 2.9E+06, CNWP = 0.4383

η = 0.93		0.76		0.59		0.40	
			Upper Surface				
x/c	CP	*x/c*	CP	*x/c*	CP	*x/c*	CP
0.020	-1.476	0.000	0.497	0.000	-6.524**	0.010	-1.865
0.060	-1.211	0.020	-1.689	0.020	-1.763	0.020	-1.877
0.110	-0.793	0.040	-1.484	0.060	-1.736**	0.060	-1.903
0.200	-0.665	0.060	-1.493	0.090	-1.739	0.110	-1.965
0.230	-0.626	0.090	-1.566	0.110	-1.773	0.140	1.854**
0.400	-0.413	0.130	-1.590	0.130	-1.494	0.190	-6.397**
0.490	-0.379	0.150	-1.726	0.150	-1.104	0.250	-0.837
0.590	-0.413	0.200	-1.712	0.210	-1.196	0.400	-0.417
0.630	-0.452	0.250	-0.841	0.250	-1.006	0.490	-0.433
0.700	-0.518	0.260	-0.669	0.340	-0.765	0.580	-0.385
0.750	-0.599	0.280	-0.590	0.370	-0.679	0.650	-0.379
0.810	-0.630	0.290	-0.507	0.400	-0.647	0.700	-0.389
0.840	-0.643	0.310	-0.447	0.410	-0.591	0.750	-0.394
0.900	-0.358	0.320	-0.459	0.430	-0.599	0.800	-0.394
0.960	-0.209	0.340	-0.480	0.440	-0.553	0.830	-0.297
		0.350	-0.107**	0.460	-0.524	0.900	-0.216
		0.370	-0.452	0.490	-0.500	0.960	-0.189
		0.380	-0.448	0.500	-0.490		
		0.400	-0.407	0.520	-0.487		
		0.410	-0.454	0.540	-0.477		
		0.430	-0.422	0.550	-0.464		
		0.440	-0.380	0.580	-0.416		
		0.460	-0.489	0.600	-0.464		
		0.470	-0.451	0.610	-0.356		
		0.490	-0.420	0.650	-3.789**		
		0.500	-0.413	0.700	-0.376		
		0.520	-0.423	0.750	-0.391		
		0.530	-0.398	0.820	-0.313		
		0.550	-0.416	0.890	-0.165		
		0.560	-0.435	0.900	-0.147		
		0.580	-0.390	0.960	-0.141		
		0.590	-0.438				
		0.600	-0.450				
		0.640	-3.635**				
		0.700	-0.491				
		0.750	-0.535				
		0.820	-3.801**				
		0.870	-0.291				
		0.930	-0.117				
		0.960	-0.055				
			Lower Surface				
0.020	0.308	0.020	0.546	0.020	0.518	0.020	0.748**
0.110	0.145	0.060	0.436	0.060	0.491	0.060	5.113**
0.230	0.223	0.090	0.346	0.090	0.383	0.110	0.315
0.400	0.080	0.120	0.301	0.120	0.186	0.250	0.163
0.490	0.069	0.200	0.244	0.200	0.201	0.400	0.119
0.630	3.026**	0.260	0.197	0.250	0.211	0.490	0.048
0.750	0.103	0.400	-3.818**	0.400	0.105	0.580	0.038
0.850	0.138	0.490	0.089	0.490	0.056	0.650	0.128
0.900	0.200	0.580	0.124	0.580	0.062	0.750	0.315
0.960	0.115	0.640	0.417	0.650	0.191	0.830	0.397
		0.750	0.255	0.750	0.098	0.900	0.460
		0.870	0.329	0.890	********	0.960	0.273
		0.930	0.279	0.930	0.321		
		0.960	0.162	0.960	-3.816**		
CN =	0.651		0.913		0.810		0.866

Table D-2. Continued.

Flight 195, Wing sweep = 26°, Time = 8-37-22-000, MINF = 0.691, Camber = 5/6, ALPT = 11.06, BETA = -0.19, QINF = 312.5, RNPU = 2.9E+06, CNWP = 0.4411

η = 0.93		0.76		0.59		0.40	
			Upper Surface				
x/c	CP	*x/c*	CP	*x/c*	CP	*x/c*	CP
0.020	-1.516	0.000	0.461	0.000	-6.548**	0.010	-1.886
0.060	-1.246	0.020	-1.715	0.020	-1.806	0.020	-1.909
0.110	-0.768	0.040	-1.511	0.060	-1.764**	0.060	-1.914
0.200	-0.672	0.060	-1.533	0.090	-1.760	0.110	-1.995
0.230	-0.633	0.090	-1.585	0.110	-1.792	0.140	1.859**
0.400	-0.413	0.130	-1.559	0.130	-1.342	0.190	-6.421**
0.490	-0.389	0.150	-1.745	0.150	-1.113	0.250	-0.763
0.590	-0.431	0.200	-1.723	0.210	-1.205	0.400	-0.424
0.630	-0.467	0.250	-0.799	0.250	-1.001	0.490	-0.440
0.700	-0.535	0.260	-0.651	0.340	-0.802	0.580	-0.392
0.750	-0.621	0.280	-0.563	0.370	-0.717	0.650	-0.386
0.810	-0.660	0.290	-0.506	0.400	-0.690	0.700	-0.406
0.840	-0.658	0.310	-0.461	0.410	-0.613	0.750	-0.401
0.900	-0.365	0.320	-0.470	0.430	-0.607	0.800	-0.408
0.960	-0.216	0.340	-0.497	0.440	-0.571	0.830	-0.295
		0.350	-0.118**	0.460	-0.531	0.900	-0.223
		0.370	-0.469	0.490	-0.500	0.960	-0.195
		0.380	-0.468	0.500	-0.497		
		0.400	-0.413	0.520	-0.502		
		0.410	-0.470	0.540	-0.497		
		0.430	-0.446	0.550	-0.460		
		0.440	-0.416	0.580	-0.423		
		0.460	-0.482	0.600	-0.471		
		0.470	-0.471	0.610	-0.362		
		0.490	-0.435	0.650	-3.806**		
		0.500	-0.435	0.700	-0.404		
		0.520	-0.437	0.750	-0.404		
		0.530	-0.411	0.820	-0.336		
		0.550	-0.423	0.890	-0.179		
		0.560	-0.454	0.900	-0.158		
		0.580	-0.403	0.960	-0.143		
		0.590	-0.453				
		0.600	-0.471				
		0.640	-3.651**				
		0.700	-0.512				
		0.750	-0.560				
		0.820	-3.818**				
		0.870	-0.298				
		0.930	-0.123				
		0.960	-0.061				
			Lower Surface				
0.020	0.284	0.020	0.481	0.020	0.514	0.020	0.744**
0.110	0.139	0.060	0.435	0.060	0.486	0.060	5.122**
0.230	0.211	0.090	0.341	0.090	0.378	0.110	0.310
0.400	0.078	0.120	0.296	0.120	0.181	0.250	0.157
0.490	0.053	0.200	0.236	0.200	0.183	0.400	0.107
0.630	3.029**	0.260	0.196	0.250	0.206	0.490	0.057
0.750	0.097	0.400	-3.834**	0.400	0.100	0.580	0.032
0.850	0.132	0.490	0.091	0.490	0.058	0.650	0.126
0.900	0.193	0.580	0.122	0.580	0.056	0.750	0.315
0.960	0.106	0.640	0.419	0.650	0.207	0.830	0.393
		0.750	0.262	0.750	0.099	0.900	0.456
		0.870	0.333	0.890	********	0.960	0.265
		0.930	0.278	0.930	0.323		
		0.960	0.160	0.960	-3.833**		
CN =	0.653		0.925		0.818		0.861

Table D-2. Continued.

Flight 195, Wing sweep = 26°, Time = 8-39-31-500, MINF = 0.696, Camber = 5/10, ALPT = 3.95, BETA = -0.03, QINF = 282.6, RNPU = 2.6E+06, CNWP = 0.3128

η = 0.93		0.76		0.59		0.40	
			Upper Surface				
x/c	CP	*x/c*	CP	*x/c*	CP	*x/c*	CP
0.020	0.283	0.000	0.585	0.000	-6.880**	0.010	-0.278
0.060	-0.038	0.020	0.168	0.020	0.059	0.020	-0.214
0.110	-0.226	0.040	-0.011	0.060	-1.151**	0.060	-0.533
0.200	-0.312	0.060	-0.226	0.090	-0.461	0.110	-0.693
0.230	-0.356	0.090	-0.363	0.110	-0.585	0.140	2.044**
0.400	-0.243	0.130	-0.514	0.130	-0.701	0.190	-6.739**
0.490	-0.260	0.150	-0.579	0.150	-0.513	0.250	-0.411
0.590	-0.327	0.200	-0.452	0.210	-0.537	0.400	-0.364
0.630	-0.382	0.250	-0.382	0.250	-0.423	0.490	-0.377
0.700	-0.499	0.260	-0.344	0.340	-0.414	0.580	-0.374
0.750	-0.685	0.280	-0.370	0.370	-0.394	0.650	-0.487
0.810	-0.699	0.290	-0.351	0.400	-0.381	0.700	-0.511
0.840	-0.691	0.310	-0.343	0.410	-0.375	0.750	-0.649
0.900	-0.205	0.320	-0.351	0.430	-0.428	0.800	-0.706
0.960	-0.070	0.340	-0.374	0.440	-0.390	0.830	-0.703
		0.350	-0.155**	0.460	-0.383	0.900	-0.180
		0.370	-0.343	0.490	-0.385	0.960	-0.144
		0.380	-0.345	0.500	-0.387		
		0.400	-0.301	0.520	-0.398		
		0.410	-0.365	0.540	-0.431		
		0.430	-0.349	0.550	-0.399		
		0.440	-0.319	0.580	-0.407		
		0.460	-0.393	0.600	-0.494		
		0.470	-0.399	0.610	-0.407		
		0.490	-0.363	0.650	-3.847**		
		0.500	-0.361	0.700	-0.584		
		0.520	-0.364	0.750	-0.620		
		0.530	-0.365	0.820	-0.676		
		0.550	-0.386	0.890	-0.198		
		0.560	-0.420	0.900	-0.173		
		0.580	-0.378	0.960	-0.182		
		0.590	-0.425				
		0.600	-0.442				
		0.640	-3.676**				
		0.700	-0.613				
		0.750	-0.776				
		0.820	-3.860**				
		0.870	-0.452				
		0.930	-0.253				
		0.960	-0.149				
			Lower Surface				
0.020	-0.519	0.020	-0.520	0.020	-0.413	0.020	-0.156**
0.110	-0.138	0.060	-0.058	0.060	-0.017	0.060	6.027**
0.230	-0.003	0.090	-0.100	0.090	-0.094	0.110	-0.118
0.400	0.024	0.120	-0.048	0.120	-0.239	0.250	-0.137
0.490	0.027	0.200	0.022	0.200	-0.021	0.400	-0.073
0.630	3.711**	0.260	-0.031	0.250	-0.043	0.490	-0.084
0.750	0.189	0.400	-3.879**	0.400	-0.033	0.580	-0.048
0.850	0.261	0.490	0.033	0.490	0.022	0.650	0.120
0.900	0.318	0.580	0.115	0.580	0.027	0.750	0.349
0.960	0.201	0.640	0.488	0.650	0.251	0.830	0.438
		0.750	0.316	0.750	0.059	0.900	0.518
		0.870	0.396	0.890	********	0.960	0.340
		0.930	0.337	0.930	0.387		
		0.960	0.185	0.960	-3.877**		
CN =	0.389		0.544		0.482		0.508

Table D-2. Continued.

Flight 195, Wing sweep = 26°, Time = 8-39-46-000, MINF = 0.691, Camber = 5/10, ALPT = 6.00, BETA = -0.32, QINF = 278.5, RNPU = 2.5E+06, CNWP = 0.3859

η = 0.93		0.76		0.59		0.40	
			Upper Surface				
x/c	CP	*x/c*	CP	*x/c*	CP	*x/c*	CP
0.020	-0.025	0.000	0.841	0.000	-6.977**	0.010	-0.946
0.060	-0.236	0.020	-0.334	0.020	-0.391	0.020	-0.592
0.110	-0.419	0.040	-0.320	0.060	-1.315**	0.060	-0.909
0.200	-0.439	0.060	-0.575	0.090	-0.766	0.110	-0.998
0.230	-0.423	0.090	-0.651	0.110	-0.913	0.140	2.078**
0.400	-0.294	0.130	-0.805	0.130	-1.084	0.190	-6.834**
0.490	-0.293	0.150	-0.839	0.150	-0.726	0.250	-0.542
0.590	-0.360	0.200	-0.620	0.210	-0.736	0.400	-0.419
0.630	-0.422	0.250	-0.524	0.250	-0.553	0.490	-0.420
0.700	-0.536	0.260	-0.463	0.340	-0.518	0.580	-0.423
0.750	-0.739	0.280	-0.492	0.370	-0.499	0.650	-0.532
0.810	-0.757	0.290	-0.484	0.400	-0.478	0.700	-0.557
0.840	-0.748	0.310	-0.420	0.410	-0.470	0.750	-0.687
0.900	-0.240	0.320	-0.436	0.430	-0.499	0.800	-0.668
0.960	-0.138	0.340	-0.459	0.440	-0.483	0.830	-0.650
		0.350	-0.172**	0.460	-0.472	0.900	-0.184
		0.370	-0.427	0.490	-0.444	0.960	-0.146
		0.380	-0.419	0.500	-0.478		
		0.400	-0.357	0.520	-0.476		
		0.410	-0.432	0.540	-0.487		
		0.430	-0.413	0.550	-0.469		
		0.440	-0.384	0.580	-0.452		
		0.460	-0.443	0.600	-0.536		
		0.470	-0.436	0.610	-0.455		
		0.490	-0.417	0.650	-3.900**		
		0.500	-0.412	0.700	-0.602		
		0.520	-0.425	0.750	-0.654		
		0.530	-0.417	0.820	-0.673		
		0.550	-0.441	0.890	-0.196		
		0.560	-0.462	0.900	-0.180		
		0.580	-0.422	0.960	-0.195		
		0.590	-0.488				
		0.600	-0.520				
		0.640	-3.726**				
		0.700	-0.647				
		0.750	-0.677				
		0.820	-3.913**				
		0.870	-0.514				
		0.930	-0.279				
		0.960	-0.193				
			Lower Surface				
0.020	-0.281	0.020	-0.113	0.020	-0.006	0.020	0.260**
0.110	-0.043	0.060	0.115	0.060	0.170	0.060	6.116**
0.230	0.060	0.090	0.063	0.090	0.079	0.110	0.051
0.400	0.050	0.120	0.073	0.120	-0.110	0.250	-0.028
0.490	0.038	0.200	0.091	0.200	0.032	0.400	-0.009
0.630	3.767**	0.260	0.041	0.250	0.046	0.490	-0.035
0.750	0.173	0.400	-3.932**	0.400	0.018	0.580	0.003
0.850	0.225	0.490	0.056	0.490	0.047	0.650	0.148
0.900	0.291	0.580	0.154	0.580	0.061	0.750	0.372
0.960	0.180	0.640	0.491	0.650	0.292	0.830	0.469
		0.750	0.296	0.750	0.078	0.900	0.536
		0.870	0.429	0.890	********	0.960	0.344
		0.930	0.336	0.930	0.394		
		0.960	0.198	0.960	-3.931**		
CN =	0.479		0.685		0.626		0.652

Table D-2. Concluded.

Flight 195, Wing sweep = 26°, Time = 8-39-57-500, MINF = 0.690, Camber = 5/10, ALPT = 7.01, BETA = -0.37, QINF = 276.5, RNPU = 2.5E+06, CNWP = 0.4296

η = 0.93		0.76		0.59		0.40	
			Upper Surface				
x/c	CP	*x/c*	CP	*x/c*	CP	*x/c*	CP
0.020	-0.236	0.000	0.863	0.000	-7.018**	0.010	-1.331
0.060	-0.427	0.020	-0.636	0.020	-0.653	0.020	-0.727
0.110	-0.497	0.040	-0.527	0.060	-1.459**	0.060	-1.248
0.200	-0.501	0.060	-0.769	0.090	-0.908	0.110	-1.015
0.230	-0.476	0.090	-0.814	0.110	-1.064	0.140	2.085**
0.400	-0.309	0.130	-0.999	0.130	-1.238	0.190	-6.874**
0.490	-0.324	0.150	-1.094	0.150	-1.109	0.250	-0.595
0.590	-0.399	0.200	-0.725	0.210	-0.792	0.400	-0.471
0.630	-0.443	0.250	-0.587	0.250	-0.609	0.490	-0.474
0.700	-0.572	0.260	-0.522	0.340	-0.561	0.580	-0.477
0.750	-0.762	0.280	-0.553	0.370	-0.568	0.650	-0.551
0.810	-0.802	0.290	-0.536	0.400	-0.510	0.700	-0.585
0.840	-0.787	0.310	-0.482	0.410	-0.505	0.750	-0.705
0.900	-0.257	0.320	-0.493	0.430	-0.526	0.800	-0.662
0.960	-0.174	0.340	-0.505	0.440	-0.521	0.830	-0.669
		0.350	-0.150**	0.460	-0.501	0.900	-0.214
		0.370	-0.463	0.490	-0.468	0.960	-0.172
		0.380	-0.459	0.500	-0.507		
		0.400	-0.408	0.520	-0.525		
		0.410	-0.467	0.540	-0.524		
		0.430	-0.431	0.550	-0.489		
		0.440	-0.411	0.580	-0.472		
		0.460	-0.490	0.600	-0.555		
		0.470	-0.463	0.610	-0.463		
		0.490	-0.443	0.650	-3.918**		
		0.500	-0.457	0.700	-0.638		
		0.520	-0.451	0.750	-0.667		
		0.530	-0.435	0.820	-0.626		
		0.550	-0.463	0.890	-0.208		
		0.560	-0.488	0.900	-0.187		
		0.580	-0.427	0.960	-0.201		
		0.590	-0.512				
		0.600	-0.523				
		0.640	-3.743**				
		0.700	-0.676				
		0.750	-0.741				
		0.820	-3.932**				
		0.870	-0.518				
		0.930	-0.242				
		0.960	-0.191				
			Lower Surface				
0.020	-0.089	0.020	0.066	0.020	0.134	0.020	0.444**
0.110	-0.004	0.060	0.232	0.060	0.254	0.060	6.173**
0.230	0.092	0.090	0.138	0.090	0.162	0.110	0.107
0.400	0.057	0.120	0.126	0.120	-0.034	0.250	0.019
0.490	0.053	0.200	0.130	0.200	0.073	0.400	0.026
0.630	3.807**	0.260	0.084	0.250	0.089	0.490	0.001
0.750	0.169	0.400	-3.951**	0.400	0.046	0.580	0.036
0.850	0.218	0.490	0.071	0.490	0.043	0.650	0.176
0.900	0.286	0.580	0.154	0.580	0.081	0.750	0.386
0.960	0.150	0.640	0.499	0.650	0.282	0.830	0.468
		0.750	0.309	0.750	0.089	0.900	0.545
		0.870	0.404	0.890	********	0.960	0.358
		0.930	0.334	0.930	0.400		
		0.960	0.179	0.960	-3.949**		
CN =	0.534		0.772		0.698		0.728

Table D-2. Continued.

Flight 195, Wing sweep = 26°, Time = 8-40-7-500, MINF = 0.701, Camber = 5/10, ALPT = 8.06, BETA = -0.11, QINF = 286.0, RNPU = 2.6E+06, CNWP = 0.5042

η = 0.93		0.76		0.59		0.40	
			Upper Surface				
x/c	CP	*x/c*	CP	*x/c*	CP	*x/c*	CP
0.020	-0.489	0.000	0.823	0.000	-6.786**	0.010	-1.281
0.060	-0.521	0.020	-0.978	0.020	-0.892	0.020	-1.416
0.110	-0.631	0.040	-0.704	0.060	-1.562**	0.060	-1.393
0.200	-0.559	0.060	-1.007	0.090	-1.257	0.110	-1.527
0.230	-0.530	0.090	-1.024	0.110	-1.300	0.140	2.031**
0.400	-0.343	0.130	-1.035	0.130	-1.399	0.190	-6.647**
0.490	-0.339	0.150	-1.248	0.150	-1.341	0.250	-0.621
0.590	-0.402	0.200	-1.273	0.210	-1.415	0.400	-0.487
0.630	-0.464	0.250	-0.582	0.250	-0.607	0.490	-0.465
0.700	-0.568	0.260	-0.520	0.340	-0.580	0.580	-0.466
0.750	-0.737	0.280	-0.544	0.370	-0.555	0.650	-0.521
0.810	-0.764	0.290	-0.537	0.400	-0.519	0.700	-0.586
0.840	-0.776	0.310	-0.494	0.410	-0.524	0.750	-0.662
0.900	-0.261	0.320	-0.504	0.430	-0.560	0.800	-0.590
0.960	-0.208	0.340	-0.519	0.440	-0.525	0.830	-0.561
		0.350	-0.160**	0.460	-0.525	0.900	-0.189
		0.370	-0.476	0.490	-0.464	0.960	-0.104
		0.380	-0.473	0.500	-0.508		
		0.400	-0.427	0.520	-0.531		
		0.410	-0.481	0.540	-0.538		
		0.430	-0.466	0.550	-0.490		
		0.440	-0.417	0.580	-0.490		
		0.460	-0.509	0.600	-0.560		
		0.470	-0.475	0.610	-0.494		
		0.490	-0.453	0.650	-3.790**		
		0.500	-0.448	0.700	-0.615		
		0.520	-0.424	0.750	-0.647		
		0.530	-0.440	0.820	-0.595		
		0.550	-0.481	0.890	-0.169		
		0.560	-0.490	0.900	-0.156		
		0.580	-0.449	0.960	-0.178		
		0.590	-0.499				
		0.600	-0.514				
		0.640	-3.621**				
		0.700	-0.679				
		0.750	-0.749				
		0.820	-3.803**				
		0.870	-0.492				
		0.930	-0.244				
		0.960	-0.199				
			Lower Surface				
0.020	0.061	0.020	0.263	0.020	0.296	0.020	0.556**
0.110	0.066	0.060	0.310	0.060	0.356	0.060	5.964**
0.230	0.164	0.090	0.214	0.090	0.242	0.110	0.184
0.400	0.091	0.120	0.188	0.120	0.034	0.250	0.065
0.490	0.075	0.200	0.191	0.200	0.134	0.400	0.080
0.630	3.677**	0.260	0.143	0.250	0.149	0.490	0.029
0.750	0.183	0.400	-3.821**	0.400	0.093	0.580	0.084
0.850	0.230	0.490	0.097	0.490	0.054	0.650	0.206
0.900	0.293	0.580	0.184	0.580	0.106	0.750	0.406
0.960	0.151	0.640	0.519	0.650	0.300	0.830	0.483
		0.750	0.344	0.750	0.110	0.900	0.577
		0.870	0.408	0.890	********	0.960	0.386
		0.930	0.355	0.930	0.407		
		0.960	0.204	0.960	-3.820**		
CN =	0.595		0.870		0.807		0.827

Table D-2. Continued.

Flight 195, Wing sweep = 26°, Time = 8-41-2-000, MINF = 0.686, Camber = 5/10, ALPT = 6.99, BETA = -0.19, QINF = 283.2, RNPU = 2.6E+06, CNWP = 0.4150

η = 0.93		0.76		0.59		0.40	
			Upper Surface				
x/c	CP	*x/c*	CP	*x/c*	CP	*x/c*	CP
0.020	-0.198	0.000	0.879	0.000	-6.951**	0.010	-1.292
0.060	-0.391	0.020	-0.594	0.020	-0.622	0.020	-0.759
0.110	-0.467	0.040	-0.496	0.060	-1.458**	0.060	-1.234
0.200	-0.483	0.060	-0.744	0.090	-0.935	0.110	-1.042
0.230	-0.458	0.090	-0.788	0.110	-1.061	0.140	2.036**
0.400	-0.311	0.130	-0.965	0.130	-1.227	0.190	-6.811**
0.490	-0.314	0.150	-0.938	0.150	-0.838	0.250	-0.582
0.590	-0.383	0.200	-0.706	0.210	-0.802	0.400	-0.468
0.630	-0.434	0.250	-0.580	0.250	-0.596	0.490	-0.461
0.700	-0.560	0.260	-0.503	0.340	-0.558	0.580	-0.459
0.750	-0.749	0.280	-0.533	0.370	-0.540	0.650	-0.539
0.810	-0.784	0.290	-0.516	0.400	-0.499	0.700	-0.575
0.840	-0.773	0.310	-0.470	0.410	-0.494	0.750	-0.697
0.900	-0.259	0.320	-0.475	0.430	-0.538	0.800	-0.662
0.960	-0.156	0.340	-0.493	0.440	-0.502	0.830	-0.666
		0.350	-0.173**	0.460	-0.488	0.900	-0.193
		0.370	-0.449	0.490	-0.458	0.960	-0.161
		0.380	-0.446	0.500	-0.493		
		0.400	-0.391	0.520	-0.506		
		0.410	-0.456	0.540	-0.521		
		0.430	-0.439	0.550	-0.499		
		0.440	-0.398	0.580	-0.464		
		0.460	-0.484	0.600	-0.535		
		0.470	-0.452	0.610	-0.460		
		0.490	-0.434	0.650	-3.925**		
		0.500	-0.422	0.700	-0.627		
		0.520	-0.425	0.750	-0.660		
		0.530	-0.425	0.820	-0.635		
		0.550	-0.454	0.890	-0.179		
		0.560	-0.470	0.900	-0.168		
		0.580	-0.432	0.960	-0.181		
		0.590	-0.498				
		0.600	-0.509				
		0.640	-3.755**				
		0.700	-0.673				
		0.750	-0.740				
		0.820	-3.939**				
		0.870	-0.488				
		0.930	-0.268				
		0.960	-0.187				
			Lower Surface				
0.020	-0.110	0.020	0.045	0.020	0.129	0.020	0.441**
0.110	-0.004	0.060	0.225	0.060	0.255	0.060	5.926**
0.230	0.113	0.090	0.135	0.090	0.165	0.110	0.133
0.400	0.059	0.120	0.137	0.120	-0.036	0.250	0.025
0.490	0.059	0.200	0.134	0.200	0.078	0.400	0.033
0.630	3.616**	0.260	0.089	0.250	0.094	0.490	0.007
0.750	0.176	0.400	-3.957**	0.400	0.051	0.580	0.042
0.850	0.231	0.490	0.080	0.490	0.049	0.650	0.179
0.900	0.298	0.580	0.157	0.580	0.086	0.750	0.404
0.960	0.162	0.640	0.500	0.650	0.289	0.830	0.477
		0.750	0.317	0.750	0.086	0.900	0.558
		0.870	0.420	0.890	********	0.960	0.362
		0.930	0.349	0.930	0.390		
		0.960	0.193	0.960	-3.956**		
CN =	0.528		0.759		0.685		0.729

Table D-2. Continued.

Flight 195, Wing sweep = 26°, Time = 8-41-12-000, MINF = 0.700, Camber = 5/10, ALPT = 8.12, BETA = -0.08, QINF = 299.5, RNPU = 2.7E+06, CNWP = 0.4919

η = 0.93		0.76		0.59		0.40	
			Upper Surface				
x/c	CP	*x/c*	CP	*x/c*	CP	*x/c*	CP
0.020	-0.491	0.000	0.810	0.000	-6.618**	0.010	-1.295
0.060	-0.505	0.020	-0.979	0.020	-0.913	0.020	-1.403
0.110	-0.600	0.040	-0.712	0.060	-1.506**	0.060	-1.408
0.200	-0.576	0.060	-1.016	0.090	-1.272	0.110	-1.531
0.230	-0.514	0.090	-1.021	0.110	-1.312	0.140	1.925**
0.400	-0.365	0.130	-1.050	0.130	-1.403	0.190	-6.485**
0.490	-0.354	0.150	-1.243	0.150	-1.330	0.250	-0.644
0.590	-0.411	0.200	-1.273	0.210	-1.411	0.400	-0.479
0.630	-0.459	0.250	-0.589	0.250	-0.603	0.490	-0.471
0.700	-0.572	0.260	-0.539	0.340	-0.593	0.580	-0.489
0.750	-0.746	0.280	-0.559	0.370	-0.569	0.650	-0.530
0.810	-0.776	0.290	-0.557	0.400	-0.540	0.700	-0.596
0.840	-0.779	0.310	-0.505	0.410	-0.526	0.750	-0.676
0.900	-0.274	0.320	-0.521	0.430	-0.573	0.800	-0.586
0.960	-0.192	0.340	-0.525	0.440	-0.525	0.830	-0.572
		0.350	-0.162**	0.460	-0.532	0.900	-0.217
		0.370	-0.481	0.490	-0.451	0.960	-0.116
		0.380	-0.482	0.500	-0.522		
		0.400	-0.449	0.520	-0.518		
		0.410	-0.490	0.540	-0.536		
		0.430	-0.477	0.550	-0.521		
		0.440	-0.428	0.580	-0.479		
		0.460	-0.506	0.600	-0.555		
		0.470	-0.494	0.610	-0.493		
		0.490	-0.460	0.650	-3.757**		
		0.500	-0.462	0.700	-0.645		
		0.520	-0.466	0.750	-0.673		
		0.530	-0.449	0.820	-0.634		
		0.550	-0.471	0.890	-0.186		
		0.560	-0.501	0.900	-0.167		
		0.580	-0.463	0.960	-0.174		
		0.590	-0.510				
		0.600	-0.528				
		0.640	-3.596**				
		0.700	-0.671				
		0.750	-0.734				
		0.820	-3.770**				
		0.870	-0.506				
		0.930	-0.267				
		0.960	-0.195				
			Lower Surface				
0.020	0.040	0.020	0.267	0.020	0.283	0.020	0.569**
0.110	0.034	0.060	0.295	0.060	0.332	0.060	5.557**
0.230	0.153	0.090	0.217	0.090	0.247	0.110	0.164
0.400	0.079	0.120	0.224	0.120	0.039	0.250	0.075
0.490	0.064	0.200	0.178	0.200	0.120	0.400	0.072
0.630	3.373**	0.260	0.132	0.250	0.123	0.490	0.019
0.750	0.174	0.400	-3.787**	0.400	0.081	0.580	0.062
0.850	0.219	0.490	0.099	0.490	0.029	0.650	0.196
0.900	0.280	0.580	0.168	0.580	0.093	0.750	0.413
0.960	0.141	0.640	0.494	0.650	0.271	0.830	0.493
		0.750	0.329	0.750	0.097	0.900	0.564
		0.870	0.404	0.890	********	0.960	0.372
		0.930	0.338	0.930	0.411		
		0.960	0.187	0.960	-3.786**		
CN =	0.584		0.867		0.804		0.835

Table D-2. Continued.

Flight 195, Wing sweep = 26°, Time = 8-41-18-500, MINF = 0.703, Camber = 5/10, ALPT = 9.29, BETA = 0.10, QINF = 306.0, RNPU = 2.8E+06, CNWP = 0.5275

η = 0.93		0.76		0.59		0.40	
			Upper Surface				
x/c	CP	*x/c*	CP	*x/c*	CP	*x/c*	CP
0.020	-0.911	0.000	0.696	0.000	-6.520**	0.010	-1.659
0.060	-0.809	0.020	-1.410	0.020	-1.387	0.020	-1.579
0.110	-0.731	0.040	-1.052	0.060	-1.547**	0.060	-1.626
0.200	-0.610	0.060	-1.084	0.090	-1.404	0.110	-1.711
0.230	-0.585	0.090	-1.240	0.110	-1.516	0.140	1.893**
0.400	-0.401	0.130	-1.386	0.130	-1.595	0.190	-6.390**
0.490	-0.396	0.150	-1.472	0.150	-1.538	0.250	-0.781
0.590	-0.453	0.200	-1.448	0.210	-1.633	0.400	-0.489
0.630	-0.504	0.250	-0.754	0.250	-0.882	0.490	-0.479
0.700	-0.595	0.260	-0.613	0.340	-0.549	0.580	-0.481
0.750	-1.123	0.280	-0.545	0.370	-0.535	0.650	-0.512
0.810	-1.213	0.290	-0.518	0.400	-0.535	0.700	-0.572
0.840	-1.197	0.310	-0.458	0.410	-0.515	0.750	-0.626
0.900	-0.317	0.320	-0.468	0.430	-0.561	0.800	-0.544
0.960	-0.250	0.340	-0.509	0.440	-0.520	0.830	-0.504
		0.350	-0.128**	0.460	-0.539	0.900	-0.211
		0.370	-0.470	0.490	-0.441	0.960	-0.144
		0.380	-0.488	0.500	-0.538		
		0.400	-0.445	0.520	-0.540		
		0.410	-0.501	0.540	-0.551		
		0.430	-0.473	0.550	-0.520		
		0.440	-0.436	0.580	-0.503		
		0.460	-0.530	0.600	-0.578		
		0.470	-0.546	0.610	-0.509		
		0.490	-0.469	0.650	-3.719**		
		0.500	-0.474	0.700	-0.659		
		0.520	-0.486	0.750	-0.675		
		0.530	-0.473	0.820	-0.632		
		0.550	-0.504	0.890	-0.155		
		0.560	-0.518	0.900	-0.148		
		0.580	-0.485	0.960	-0.145		
		0.590	-0.543				
		0.600	-0.569				
		0.640	-3.561**				
		0.700	-0.695				
		0.750	-0.707				
		0.820	-3.731**				
		0.870	-0.519				
		0.930	-0.372				
		0.960	-0.272				
			Lower Surface				
0.020	0.144	0.020	0.417	0.020	0.401	0.020	0.621**
0.110	0.085	0.060	0.373	0.060	0.404	0.060	5.399**
0.230	0.184	0.090	0.271	0.090	0.319	0.110	0.235
0.400	0.082	0.120	0.257	0.120	0.090	0.250	0.121
0.490	0.063	0.200	0.207	0.200	0.151	0.400	0.093
0.630	3.260**	0.260	0.159	0.250	0.172	0.490	0.070
0.750	0.161	0.400	-3.748**	0.400	0.114	0.580	0.071
0.850	0.211	0.490	0.113	0.490	0.075	0.650	0.214
0.900	0.262	0.580	0.173	0.580	0.117	0.750	0.401
0.960	0.129	0.640	0.487	0.650	0.288	0.830	0.484
		0.750	0.323	0.750	0.114	0.900	0.559
		0.870	0.406	0.890	********	0.960	0.368
		0.930	0.328	0.930	0.410		
		0.960	0.177	0.960	-3.747**		
CN =	0.709		0.950		0.877		0.901

Table D-2. Continued.

Flight 195, Wing sweep = 26°, Time = 8-41-26-000, MINF = 0.697, Camber = 5/10, ALPT = 10.06, BETA = -0.06, QINF = 303.2, RNPU = 2.8E+06, CNWP = 0.5327

η = 0.93		0.76		0.59		0.40	
			Upper Surface				
x/c	CP	*x/c*	CP	*x/c*	CP	*x/c*	CP
0.020	-1.351	0.000	0.557	0.000	-6.603**	0.010	-1.739
0.060	-0.679	0.020	-1.588	0.020	-1.605	0.020	-1.783
0.110	-0.752	0.040	-1.320	0.060	-1.685**	0.060	-1.789
0.200	-0.650	0.060	-1.364	0.090	-1.610	0.110	-1.863
0.230	-0.617	0.090	-1.427	0.110	-1.667	0.140	1.951**
0.400	-0.431	0.130	-1.519	0.130	-1.772	0.190	-6.472**
0.490	-0.413	0.150	-1.631	0.150	-1.673	0.250	-0.980
0.590	-0.475	0.200	-1.638	0.210	-1.504	0.400	-0.461
0.630	-0.528	0.250	-0.909	0.250	-1.050	0.490	-0.465
0.700	-0.633	0.260	-0.768	0.340	-0.657	0.580	-0.470
0.750	-1.053	0.280	-0.687	0.370	-0.597	0.650	-0.480
0.810	-1.151	0.290	-0.566	0.400	-0.506	0.700	-0.527
0.840	-1.171	0.310	-0.470	0.410	-0.530	0.750	-0.555
0.900	-0.335	0.320	-0.468	0.430	-0.563	0.800	-0.502
0.960	-0.275	0.340	-0.492	0.440	-0.530	0.830	-0.453
		0.350	-0.120**	0.460	-0.525	0.900	-0.203
		0.370	-0.470	0.490	-0.499	0.960	-0.160
		0.380	-0.474	0.500	-0.505		
		0.400	-0.441	0.520	-0.526		
		0.410	-0.499	0.540	-0.537		
		0.430	-0.472	0.550	-0.518		
		0.440	-0.447	0.580	-0.488		
		0.460	-0.527	0.600	-0.565		
		0.470	-0.507	0.610	-0.481		
		0.490	-0.484	0.650	-3.777**		
		0.500	-0.495	0.700	-0.596		
		0.520	-0.479	0.750	-0.627		
		0.530	-0.472	0.820	-0.488		
		0.550	-0.499	0.890	-0.184		
		0.560	-0.531	0.900	-0.161		
		0.580	-0.483	0.960	-0.160		
		0.590	-0.538				
		0.600	-0.555				
		0.640	-3.617**				
		0.700	-0.697				
		0.750	-0.730				
		0.820	-3.789**				
		0.870	-0.515				
		0.930	-0.320				
		0.960	-0.231				
			Lower Surface				
0.020	0.242	0.020	0.495	0.020	0.485	0.020	0.714**
0.110	0.134	0.060	0.429	0.060	0.472	0.060	5.423**
0.230	0.223	0.090	0.330	0.090	0.365	0.110	0.296
0.400	0.130	0.120	0.289	0.120	0.144	0.250	0.156
0.490	0.090	0.200	0.246	0.200	0.178	0.400	0.131
0.630	3.266**	0.260	0.197	0.250	0.214	0.490	0.090
0.750	0.158	0.400	-3.806**	0.400	0.130	0.580	0.101
0.850	0.195	0.490	0.136	0.490	0.077	0.650	0.221
0.900	0.256	0.580	0.193	0.580	0.140	0.750	0.428
0.960	0.110	0.640	0.499	0.650	0.312	0.830	0.498
		0.750	0.336	0.750	0.119	0.900	0.571
		0.870	0.415	0.890	********	0.960	0.358
		0.930	0.339	0.930	0.418		
		0.960	0.190	0.960	-3.805**		
CN =	0.732		1.024		0.923		0.959

Table D-2. Continued.

Flight 195, Wing sweep = 26°, Time = 8-41-50-000, MINF = 0.699, Camber = 5/10, ALPT = 11.06, BETA = -0.06, QINF = 313.7, RNPU = 2.8E+06, CNWP = 0.5325

η = 0.93		0.76		0.59		0.40	
			Upper Surface				
x/c	CP	*x/c*	CP	*x/c*	CP	*x/c*	CP
0.020	-1.500	0.000	0.465	0.000	-6.463**	0.010	-1.846
0.060	-1.396	0.020	-1.720	0.020	-1.791	0.020	-1.869
0.110	-1.021	0.040	-1.494	0.060	-1.731**	0.060	-1.888
0.200	-0.662	0.060	-1.524	0.090	-1.720	0.110	-1.974
0.230	-0.634	0.090	-1.593	0.110	-1.791	0.140	1.861**
0.400	-0.437	0.130	-1.548	0.130	-1.269	0.190	-6.336**
0.490	-0.404	0.150	-1.766	0.150	-1.084	0.250	-1.208
0.590	-0.479	0.200	-1.759	0.210	-1.168	0.400	-0.403
0.630	-0.541	0.250	-1.012	0.250	-1.041	0.490	-0.433
0.700	-0.644	0.260	-0.870	0.340	-0.936	0.580	-0.418
0.750	-1.268	0.280	-0.811	0.370	-0.855	0.650	-0.418
0.810	-1.307	0.290	-0.677	0.400	-0.801	0.700	-0.443
0.840	-1.317	0.310	-0.550	0.410	-0.773	0.750	-0.478
0.900	-0.326	0.320	-0.535	0.430	-0.792	0.800	-0.422
0.960	-0.297	0.340	-0.513	0.440	-0.733	0.830	-0.377
		0.350	-0.115**	0.460	-0.703	0.900	-0.242
		0.370	-0.469	0.490	-0.649	0.960	-0.232
		0.380	-0.476	0.500	-0.647		
		0.400	-0.445	0.520	-0.625		
		0.410	-0.491	0.540	-0.609		
		0.430	-0.475	0.550	-0.591		
		0.440	-0.442	0.580	-0.557		
		0.460	-0.517	0.600	-0.588		
		0.470	-0.492	0.610	-0.462		
		0.490	-0.463	0.650	-3.731**		
		0.500	-0.468	0.700	-0.475		
		0.520	-0.469	0.750	-0.477		
		0.530	-0.450	0.820	-0.393		
		0.550	-0.466	0.890	-0.261		
		0.560	-0.497	0.900	-0.267		
		0.580	-0.451	0.960	-0.250		
		0.590	-0.496				
		0.600	-0.507				
		0.640	-3.577**				
		0.700	-0.592				
		0.750	-0.714				
		0.820	-3.743**				
		0.870	-0.298				
		0.930	-0.168				
		0.960	-0.168				
			Lower Surface				
0.020	0.297	0.020	0.531	0.020	0.545	0.020	0.761**
0.110	0.158	0.060	0.463	0.060	0.517	0.060	5.162**
0.230	0.253	0.090	0.369	0.090	0.405	0.110	0.322
0.400	0.114	0.120	0.327	0.120	0.188	0.250	0.189
0.490	0.089	0.200	0.274	0.200	0.221	0.400	0.153
0.630	3.077**	0.260	0.231	0.250	0.252	0.490	0.089
0.750	0.155	0.400	-3.759**	0.400	0.151	0.580	0.113
0.850	0.197	0.490	0.148	0.490	0.090	0.650	0.229
0.900	0.253	0.580	0.195	0.580	0.152	0.750	0.430
0.960	0.103	0.640	0.504	0.650	0.328	0.830	0.497
		0.750	0.333	0.750	0.128	0.900	0.568
		0.870	0.417	0.890	********	0.960	0.351
		0.930	0.333	0.930	0.405		
		0.960	0.178	0.960	-3.758**		
CN =	0.831		1.031		0.939		0.994

Table D-2. Continued.

Flight 195, Wing sweep = 26°, Time = 8-41-58-500, MINF = 0.700, Camber = 5/10, ALPT = 11.02, BETA = 0.28, QINF = 319.4, RNPU = 2.9E+06, CNWP = 0.5307

η = 0.93		0.76		0.59		0.40	
			Upper Surface				
x/c	CP	*x/c*	CP	*x/c*	CP	*x/c*	CP
0.020	-1.506	0.000	0.469	0.000	-6.390**	0.010	-1.845
0.060	-1.377	0.020	-1.708	0.020	-1.780	0.020	-1.877
0.110	-0.972	0.040	-1.502	0.060	-1.732**	0.060	-1.863
0.200	-0.665	0.060	-1.528	0.090	-1.712	0.110	-1.959
0.230	-0.634	0.090	-1.586	0.110	-1.773	0.140	1.837**
0.400	-0.446	0.130	-1.563	0.130	-1.260	0.190	-6.265**
0.490	-0.430	0.150	-1.757	0.150	-1.098	0.250	-1.243
0.590	-0.466	0.200	-1.774	0.210	-1.167	0.400	-0.378
0.630	-0.541	0.250	-1.045	0.250	-1.038	0.490	-0.428
0.700	-0.632	0.260	-0.895	0.340	-0.944	0.580	-0.423
0.750	-1.219	0.280	-0.858	0.370	-0.872	0.650	-0.420
0.810	-1.308	0.290	-0.727	0.400	-0.809	0.700	-0.457
0.840	-1.302	0.310	-0.584	0.410	-0.790	0.750	-0.472
0.900	-0.334	0.320	-0.577	0.430	-0.810	0.800	-0.443
0.960	-0.288	0.340	-0.525	0.440	-0.752	0.830	-0.373
		0.350	-0.120**	0.460	-0.735	0.900	-0.231
		0.370	-0.467	0.490	-0.640	0.960	-0.215
		0.380	-0.470	0.500	-0.674		
		0.400	-0.426	0.520	-0.665		
		0.410	-0.494	0.540	-0.653		
		0.430	-0.491	0.550	-0.594		
		0.440	-0.456	0.580	-0.549		
		0.460	-0.521	0.600	-0.592		
		0.470	-0.522	0.610	-0.489		
		0.490	-0.472	0.650	-3.707**		
		0.500	-0.472	0.700	-0.449		
		0.520	-0.434	0.750	-0.461		
		0.530	-0.458	0.820	-0.384		
		0.550	-0.485	0.890	-0.266		
		0.560	-0.502	0.900	-0.293		
		0.580	-0.458	0.960	-0.272		
		0.590	-0.501				
		0.600	-0.518				
		0.640	-3.556**				
		0.700	-0.591				
		0.750	-0.707				
		0.820	-3.719**				
		0.870	-0.272				
		0.930	-0.170				
		0.960	-0.164				
			Lower Surface				
0.020	0.298	0.020	0.546	0.020	0.547	0.020	0.760**
0.110	0.159	0.060	0.459	0.060	0.518	0.060	5.027**
0.230	0.246	0.090	0.369	0.090	0.404	0.110	0.333
0.400	0.109	0.120	0.319	0.120	0.190	0.250	0.190
0.490	0.088	0.200	0.270	0.200	0.221	0.400	0.148
0.630	2.979**	0.260	0.224	0.250	0.245	0.490	0.099
0.750	0.164	0.400	-3.735**	0.400	0.146	0.580	0.109
0.850	0.195	0.490	0.139	0.490	0.093	0.650	0.230
0.900	0.251	0.580	0.190	0.580	0.147	0.750	0.438
0.960	0.103	0.640	0.495	0.650	0.313	0.830	0.502
		0.750	0.332	0.750	0.119	0.900	0.572
		0.870	0.398	0.890	********	0.960	0.353
		0.930	0.332	0.930	0.396		
		0.960	0.180	0.960	-3.734**		
CN =	0.826		1.028		0.939		0.996

Table D-2. Continued.

Flight 204, Wing sweep = 26°, Time = 8-29-13-000, MINF = 0.695, Camber = 10/10, ALPT = 7.18, BETA = 0.17, QINF = 281.4, RNPU = 2.6E+06, CNWP = 0.5226

η = 0.93		0.76		0.59		0.40	
			Upper Surface				
x/c	CP	*x/c*	CP	*x/c*	CP	*x/c*	CP
0.020	0.179	0.000	0.721	0.000	1.492**	0.010	-0.419
0.060	-0.321	0.020	0.111	0.020	-0.059	0.020	-0.398**
0.110	-0.657	0.040	-0.121	0.060	-0.220**	0.060	-1.120**
0.200	-0.586	0.060	-0.562	0.090	-0.857	0.110	-1.394
0.230	-0.505	0.090	-0.789	0.110	-1.098	0.140	-1.720
0.400	-0.330	0.130	-1.060	0.130	-1.462	0.190	-2.960**
0.490	-0.288	0.150	-1.344	0.150	-1.588	0.250	-0.660
0.590	-0.401	0.200	-1.487	0.210	-1.596	0.400	-0.479
0.630	-0.441	0.250	-0.722	0.250	-0.797	0.490	-0.446
0.700	-0.583	0.260	-0.596	0.340	-0.498	0.580	-0.460
0.750	-0.760	0.280	-0.511	0.370	-0.518	0.650	-0.587
0.810	-0.696	0.290	-0.470	0.400	-0.466	0.700	-0.564
0.840	-0.773	0.310	-0.454	0.410	-0.486	0.750	-0.667
0.900	-0.263	0.320	-0.476	0.430	-0.491	0.800	-0.572
0.960	-0.152	0.340	-0.475	0.440	-0.484	0.830	-0.567
		0.350	-0.149**	0.460	-0.247	0.900	-0.183
		0.370	-0.481	0.490	-0.461	0.960	-0.125**
		0.380	-0.483	0.500	-0.483		
		0.400	-0.440	0.520	-0.473		
		0.410	-0.444	0.540	-0.478		
		0.430	-0.436	0.550	-0.470		
		0.440	-0.434	0.580	-0.444		
		0.460	-0.451	0.600	-0.546		
		0.470	-0.458	0.610	-0.564		
		0.490	-0.461	0.650	0.064**		
		0.500	-0.439	0.700	-0.639		
		0.520	-0.439	0.750	-0.651		
		0.530	-0.452	0.820	-0.321		
		0.550	-0.447	0.890	-0.153		
		0.560	-0.484	0.900	-0.137		
		0.580	-0.428	0.960	-0.074		
		0.590	-0.517				
		0.600	-0.497				
		0.640	-0.623				
		0.700	-0.677				
		0.750	0.083**				
		0.820	-0.493				
		0.870	-0.503				
		0.930	-0.324				
		0.960	-0.225				
			Lower Surface				
0.020	-0.238	0.020	-0.031	0.020	0.024	0.020	0.203
0.110	0.053	0.060	0.216	0.060	0.255	0.060	0.088
0.230	0.086	0.090	0.166	0.090	0.270	0.110	0.214
0.400	0.128	0.120	0.220**	0.120	0.244	0.250	0.092
0.490	0.141	0.200	0.073	0.200	0.227	0.400	0.048
0.630	4.051**	0.260	0.173	0.250	0.142	0.490	0.076
0.750	0.201	0.400	0.117	0.400	0.086	0.580	0.067
0.850	0.223	0.490	0.118	0.490	0.062	0.650	0.197
0.900	0.302	0.580	0.126	0.580	0.108	0.750	0.423
0.960	0.159	0.640	0.324	0.650	0.062	0.830	0.505
		0.750	0.379	0.750	0.070**	0.900	0.534
		0.870	0.477	0.890	0.539	0.960	0.380
		0.930	0.367	0.930	0.417		
		0.960	0.262	0.960	0.275		
CN =	0.579		0.799		0.788		0.813

Table D-2. Continued.

Flight 204, Wing sweep = 26°, Time = 8-29-16-000, MINF = 0.691, Camber = 10/10, ALPT = 8.13, BETA = 0.25, QINF = 279.8, RNPU = 2.6E+06, CNWP = 0.5499

η = 0.93		0.76		0.59		0.40	
			Upper Surface				
x/c	CP	*x/c*	CP	*x/c*	CP	*x/c*	CP
0.020	0.023	0.000	0.822	0.000	1.506**	0.010	-0.535
0.060	-0.456	0.020	-0.114	0.020	-0.274	0.020	-0.536**
0.110	-0.734	0.040	-0.268	0.060	-0.432**	0.060	-1.270**
0.200	-0.779	0.060	-0.718	0.090	-1.043	0.110	-1.593
0.230	-0.529	0.090	-0.909	0.110	-1.202	0.140	-1.903
0.400	-0.366	0.130	-1.173	0.130	-1.545	0.190	-2.995**
0.490	-0.343	0.150	-1.449	0.150	-1.638	0.250	-0.741
0.590	-0.438	0.200	-1.589	0.210	-1.686	0.400	-0.514
0.630	-0.479	0.250	-0.973	0.250	-1.005	0.490	-0.470
0.700	-0.609	0.260	-0.878	0.340	-0.519	0.580	-0.487
0.750	-0.796	0.280	-0.768	0.370	-0.515	0.650	-0.566
0.810	-0.732	0.290	-0.614	0.400	-0.471	0.700	-0.554
0.840	-0.819	0.310	-0.513	0.410	-0.508	0.750	-0.626
0.900	-0.294	0.320	-0.500	0.430	-0.512	0.800	-0.517
0.960	-0.185	0.340	-0.480	0.440	-0.527	0.830	-0.495
		0.350	-0.131**	0.460	-0.262	0.900	-0.196
		0.370	-0.467	0.490	-0.523	0.960	-0.130**
		0.380	-0.497	0.500	-0.508		
		0.400	-0.429	0.520	-0.513		
		0.410	-0.459	0.540	-0.512		
		0.430	-0.466	0.550	-0.501		
		0.440	-0.458	0.580	-0.486		
		0.460	-0.453	0.600	-0.533		
		0.470	-0.476	0.610	-0.568		
		0.490	-0.482	0.650	0.078**		
		0.500	-0.473	0.700	-0.649		
		0.520	-0.460	0.750	-0.653		
		0.530	-0.468	0.820	-0.303		
		0.550	-0.481	0.890	-0.156		
		0.560	-0.508	0.900	-0.128		
		0.580	-0.461	0.960	-0.061		
		0.590	-0.546				
		0.600	-0.549				
		0.640	-0.643				
		0.700	-0.710				
		0.750	0.077**				
		0.820	-0.526				
		0.870	-0.473				
		0.930	-0.292				
		0.960	-0.228				
			Lower Surface				
0.020	-0.080	0.020	0.124	0.020	0.139	0.020	0.359
0.110	0.088	0.060	0.272	0.060	0.311	0.060	0.086
0.230	0.105	0.090	0.230	0.090	0.315	0.110	0.235
0.400	0.115	0.120	0.251**	0.120	0.275	0.250	0.119
0.490	0.116	0.200	0.106	0.200	0.248	0.400	0.077
0.630	4.056**	0.260	0.211	0.250	0.188	0.490	0.087
0.750	0.183	0.400	0.143	0.400	0.121	0.580	0.087
0.850	0.201	0.490	0.141	0.490	0.045	0.650	0.220
0.900	0.290	0.580	0.144	0.580	0.134	0.750	0.424
0.960	0.147	0.640	0.328	0.650	0.080	0.830	0.497
		0.750	0.361	0.750	0.060**	0.900	0.538
		0.870	0.458	0.890	0.532	0.960	0.376
		0.930	0.351	0.930	0.413		
		0.960	0.242	0.960	0.240		
CN =	0.627		0.871		0.846		0.863

Table D-2. Continued.

Flight 204, Wing sweep = 26°, Time = 8-29-23-000, MINF = 0.694, Camber = 10/10, ALPT = 11.25, BETA = 0.80, QINF = 290.0, RNPU = 2.6E+06, CNWP = 0.5207

η = 0.93		0.76		0.59		0.40	
			Upper Surface				
x/c	CP	*x/c*	CP	*x/c*	CP	*x/c*	CP
0.020	-0.474	0.000	0.773	0.000	1.316**	0.010	-1.355
0.060	-0.888	0.020	-0.763	0.020	-0.898	0.020	-1.393**
0.110	-1.072	0.040	-0.662	0.060	-0.673**	0.060	-1.491**
0.200	-1.674	0.060	-1.116	0.090	-1.479	0.110	-1.873
0.230	-1.052	0.090	-1.401	0.110	-1.678	0.140	-1.935
0.400	-0.477	0.130	-1.570	0.130	-1.180	0.190	-2.970**
0.490	-0.447	0.150	-1.773	0.150	-1.126	0.250	-1.515
0.590	-0.514	0.200	-1.880	0.210	-1.101	0.400	-0.488
0.630	-0.569	0.250	-1.272	0.250	-1.051	0.490	-0.451
0.700	-0.672	0.260	-1.231	0.340	-0.975	0.580	-0.396
0.750	-0.891	0.280	-1.180	0.370	-0.957	0.650	-0.437
0.810	-0.854	0.290	-1.108	0.400	-0.881	0.700	-0.423
0.840	-0.975	0.310	-1.024	0.410	-0.903	0.750	-0.423
0.900	-0.402	0.320	-1.044	0.430	-0.889	0.800	-0.463
0.960	-0.251	0.340	-0.916	0.440	-0.877	0.830	-0.352
		0.350	-0.303**	0.460	-0.609	0.900	-0.372
		0.370	-0.782	0.490	-0.776	0.960	-0.358**
		0.380	-0.761	0.500	-0.769		
		0.400	-0.636	0.520	-0.746		
		0.410	-0.598	0.540	-0.697		
		0.430	-0.575	0.550	-0.680		
		0.440	-0.550	0.580	-0.657		
		0.460	-0.542	0.600	-0.670		
		0.470	-0.526	0.610	-0.631		
		0.490	-0.498	0.650	0.128**		
		0.500	-0.491	0.700	-0.568		
		0.520	-0.458	0.750	-0.542		
		0.530	-0.473	0.820	-0.200		
		0.550	-0.456	0.890	-0.325		
		0.560	-0.491	0.900	-0.324		
		0.580	-0.451	0.960	-0.233		
		0.590	-0.492				
		0.600	-0.475				
		0.640	-0.508				
		0.700	-0.548				
		0.750	0.072**				
		0.820	-0.448				
		0.870	-0.312				
		0.930	-0.204				
		0.960	-0.192				
			Lower Surface				
0.020	0.164	0.020	0.479	0.020	0.433	0.020	0.660
0.110	0.167	0.060	0.423	0.060	0.470	0.060	0.107
0.230	0.138	0.090	0.354	0.090	0.441	0.110	0.337
0.400	0.119	0.120	0.341**	0.120	0.383	0.250	0.210
0.490	0.157	0.200	0.197	0.200	0.268	0.400	0.143
0.630	3.832**	0.260	0.268	0.250	0.265	0.490	0.168
0.750	0.154	0.400	0.234	0.400	0.177	0.580	0.098
0.850	0.179	0.490	0.157	0.490	0.074	0.650	0.228
0.900	0.246	0.580	0.200	0.580	0.104	0.750	0.412
0.960	0.131	0.640	0.276	0.650	0.104	0.830	0.517
		0.750	0.342	0.750	0.074**	0.900	0.521
		0.870	0.435	0.890	0.522	0.960	0.284
		0.930	0.328	0.930	0.365		
		0.960	0.197	0.960	0.155		
CN =	0.852		1.024		0.966		1.001

Table D-2. Continued.

Flight 223, Wing sweep = 26°, Time = 10-6-25-000, MINF = 0.702, Camber = 5/15, ALPT = 3.12, BETA = 0.25, QINF = 288.0, RNPU = 2.6E+06, CNWP = 0.3044

η = 0.93		0.76		0.59		0.40	
			Upper Surface				
x/c	CP	*x/c*	CP	*x/c*	CP	*x/c*	CP
0.020	0.310	0.000	0.499	0.000	5.240**	0.010	-0.103
0.060	-0.035	0.020	0.144	0.020	0.153	0.020	-0.105
0.110	-0.222	0.040	0.024	0.060	-3.690**	0.060	-0.402
0.200	-0.280	0.060	-0.195	0.090	-0.385	0.110	-0.603
0.230	-0.249	0.090	-0.304	0.110	-0.542	0.140	-0.575
0.400	-0.245	0.130	-0.447	0.130	-0.627	0.190	-2.895**
0.490	-0.234	0.150	-0.544	0.150	-0.515	0.250	-0.374
0.590	-0.359	0.200	-0.425	0.210	-0.483	0.400	-0.387
0.630	-0.391	0.250	-0.388	0.250	-0.374	0.490	-0.352
0.700	-0.548	0.260	-0.347	0.340	-0.409	0.580	-0.371
0.750	-0.704	0.280	-0.379	0.370	-0.423	0.650	-0.537
0.810	-0.661	0.290	-0.364	0.400	-0.396	0.700	-0.540
0.840	-0.687	0.310	-0.354	0.410	-0.926**	0.750	-0.678
0.900	-0.279	0.320	-0.364	0.430	-0.419	0.800	-0.782**
0.960	-0.294	0.340	-0.372	0.440	-0.391	0.830	-0.589
		0.350	-0.220**	0.460	-0.409	0.900	-0.458
		0.370	-0.317	0.490	-0.334	0.960	-0.457
		0.380	-0.377	0.500	-0.428		
		0.400	-0.022	0.520	-0.435		
		0.410	-0.366	0.540	-0.424		
		0.430	-0.361	0.550	-0.382		
		0.440	-0.320	0.580	-0.385		
		0.460	-0.380	0.600	-0.482		
		0.470	-0.376	0.610	-0.488		
		0.490	-0.374	0.650	3.813**		
		0.500	-0.388	0.700	-0.627		
		0.520	-0.394	0.750	-0.681		
		0.530	-0.387	0.820	-0.612**		
		0.550	-0.440	0.890	-0.347		
		0.560	-0.442	0.900	-0.380		
		0.580	-0.405	0.960	-0.362		
		0.590	-0.487				
		0.600	-0.462				
		0.640	-0.583				
		0.700	-0.649				
		0.750	-0.016**				
		0.820	-0.631				
		0.870	-0.403				
		0.930	-0.319				
		0.960	-0.321				
			Lower Surface				
0.020	-0.566	0.020	-0.542	0.020	-0.397	0.020	-0.233
0.110	-0.128	0.060	-0.114	0.060	-0.048	0.060	2.341**
0.230	-0.030	0.090	-0.093	0.090	2.351**	0.110	0.030
0.400	0.073	0.120	-0.039	0.120	-0.160	0.250	-0.124
0.490	0.121	0.200	-0.030	0.200	-0.016	0.400	-0.070
0.630	2.404**	0.260	0.016	0.250	-0.039	0.490	-0.024
0.750	0.265	0.400	0.050	0.400	-0.010	0.580	0.044
0.850	0.314	0.490	0.060	0.490	0.004	0.650	0.268
0.900	0.384	0.580	0.158	0.580	0.132	0.750	0.414
0.960	0.211	0.640	0.348	0.650	-0.025	0.830	0.529
		0.750	0.418	0.750	0.005	0.900	0.573
		0.870	0.498	0.890	0.508	0.960	0.393
		0.930	0.405	0.930	0.429		
		0.960	0.254	0.960	-0.599**		
CN =	0.439		0.568		0.490		0.582

Table D-2. Continued.

Flight 223, Wing sweep = 26°, Time = 10-6-40-000, MINF = 0.702, Camber = 5/16, ALPT = 4.04, BETA = -0.21, QINF = 288.1, RNPU = 2.6E+06, CNWP = 0.3618

η = 0.93		0.76		0.59		0.40	
			Upper Surface				
x/c	CP	*x/c*	CP	*x/c*	CP	*x/c*	CP
0.020	0.218	0.000	0.650	0.000	5.232**	0.010	-0.334
0.060	-0.085	0.020	0.053	0.020	-0.021	0.020	-0.270
0.110	-0.298	0.040	-0.082	0.060	-3.696**	0.060	-0.535
0.200	-0.337	0.060	-0.315	0.090	-0.491	0.110	-0.702
0.230	-0.433	0.090	-0.397	0.110	-0.641	0.140	-0.659
0.400	-0.245	0.130	-0.554	0.130	-0.754	0.190	-2.902**
0.490	-0.275	0.150	-0.630	0.150	-0.603	0.250	-0.394
0.590	-0.383	0.200	-0.499	0.210	-0.571	0.400	-0.414
0.630	-0.410	0.250	-0.417	0.250	-0.418	0.490	-0.383
0.700	-0.567	0.260	-0.403	0.340	-0.448	0.580	-0.363
0.750	-0.689	0.280	-0.410	0.370	-0.439	0.650	-0.571
0.810	-0.638	0.290	-0.416	0.400	-0.403	0.700	-0.564
0.840	-0.671	0.310	-0.399	0.410	-0.932**	0.750	-0.684
0.900	-0.318	0.320	-0.396	0.430	-0.457	0.800	-0.803**
0.960	-0.315	0.340	-0.398	0.440	-0.425	0.830	-0.581
		0.350	-0.213**	0.460	-0.441	0.900	-0.450
		0.370	-0.358	0.490	-0.435	0.960	-0.466
		0.380	-0.417	0.500	-0.459		
		0.400	-0.025	0.520	-0.455		
		0.410	-0.402	0.540	-0.466		
		0.430	-0.373	0.550	-0.412		
		0.440	-0.354	0.580	-0.398		
		0.460	-0.394	0.600	-0.484		
		0.470	-0.374	0.610	-0.493		
		0.490	-0.387	0.650	3.805**		
		0.500	-0.399	0.700	-0.641		
		0.520	-0.403	0.750	-0.696		
		0.530	-0.397	0.820	-0.591**		
		0.550	-0.445	0.890	-0.360		
		0.560	-0.450	0.900	-0.382		
		0.580	-0.425	0.960	-0.365		
		0.590	-0.496				
		0.600	-0.484				
		0.640	-0.606				
		0.700	-0.663				
		0.750	-0.001**				
		0.820	-0.631				
		0.870	-0.433				
		0.930	-0.356				
		0.960	-0.347				
			Lower Surface				
0.020	-0.392	0.020	-0.370	0.020	-0.226	0.020	-0.017
0.110	-0.092	0.060	-0.032	0.060	0.043	0.060	2.334**
0.230	0.010	0.090	-0.036	0.090	2.343**	0.110	0.028
0.400	0.070	0.120	0.015	0.120	-0.107	0.250	-0.085
0.490	0.132	0.200	0.012	0.200	0.006	0.400	-0.024
0.630	2.396**	0.260	0.016	0.250	0.007	0.490	0.000
0.750	0.257	0.400	0.062	0.400	0.008	0.580	0.058
0.850	0.310	0.490	0.091	0.490	0.013	0.650	0.269
0.900	0.387	0.580	0.167	0.580	0.156	0.750	0.422
0.960	0.189	0.640	0.379	0.650	-0.040	0.830	0.552
		0.750	0.435	0.750	0.024	0.900	0.581
		0.870	0.516	0.890	0.535	0.960	0.410
		0.930	0.409	0.930	0.460		
		0.960	0.262	0.960	-0.605**		
CN =	0.487		0.628		0.552		0.632

Table D-2. Continued.

Flight 223, Wing sweep = 26°, Time = 10-6-42-000, MINF = 0.704, Camber = 5/16, ALPT = 5.16, BETA = -0.07, QINF = 289.9, RNPU = 2.6E+06, CNWP = 0.3858

η = 0.93		0.76		0.59		0.40	
			Upper Surface				
x/c	CP	*x/c*	CP	*x/c*	CP	*x/c*	CP
0.020	0.067	0.000	0.773	0.000	5.199**	0.010	-0.679
0.060	-0.144	0.020	-0.164	0.020	-0.245	0.020	-0.485
0.110	-0.405	0.040	-0.260	0.060	-3.675**	0.060	-0.739
0.200	-0.402	0.060	-0.507	0.090	-0.651	0.110	-0.861
0.230	-0.316	0.090	-0.557	0.110	-0.825	0.140	-0.841
0.400	-0.291	0.130	-0.707	0.130	-0.995	0.190	-2.885**
0.490	-0.282	0.150	-0.786	0.150	-0.731	0.250	-0.509
0.590	-0.410	0.200	-0.614	0.210	-0.674	0.400	-0.456
0.630	-0.433	0.250	-0.508	0.250	-0.492	0.490	-0.411
0.700	-0.584	0.260	-0.465	0.340	-0.508	0.580	-0.426
0.750	-0.665	0.280	-0.480	0.370	-0.510	0.650	-0.600
0.810	-0.665	0.290	-0.462	0.400	-0.470	0.700	-0.578
0.840	-0.653	0.310	-0.454	0.410	-0.928**	0.750	-0.703
0.900	-0.356	0.320	-0.459	0.430	-0.502	0.800	-0.784**
0.960	-0.365	0.340	-0.453	0.440	-0.477	0.830	-0.597
		0.350	-0.219**	0.460	-0.485	0.900	-0.485
		0.370	-0.406	0.490	-0.426	0.960	-0.481
		0.380	-0.467	0.500	-0.486		
		0.400	-0.060	0.520	-0.497		
		0.410	-0.444	0.540	-0.492		
		0.430	-0.420	0.550	-0.449		
		0.440	-0.388	0.580	-0.433		
		0.460	-0.442	0.600	-0.531		
		0.470	-0.453	0.610	-0.532		
		0.490	-0.423	0.650	3.781**		
		0.500	-0.437	0.700	-0.661		
		0.520	-0.490	0.750	-0.719		
		0.530	-0.436	0.820	-0.575**		
		0.550	-0.434	0.890	-0.379		
		0.560	-0.487	0.900	-0.397		
		0.580	-0.451	0.960	-0.382		
		0.590	-0.531				
		0.600	-0.508				
		0.640	-0.634				
		0.700	-0.687				
		0.750	-0.009**				
		0.820	-0.640				
		0.870	-0.379				
		0.930	-0.340				
		0.960	-0.354				
			Lower Surface				
0.020	-0.312	0.020	-0.173	0.020	-0.001	0.020	0.174
0.110	-0.059	0.060	0.061	0.060	0.137	0.060	2.318**
0.230	0.032	0.090	0.032	0.090	2.328**	0.110	0.068
0.400	0.068	0.120	0.105	0.120	-0.045	0.250	-0.045
0.490	0.134	0.200	0.037	0.200	0.033	0.400	-0.002
0.630	2.380**	0.260	0.060	0.250	0.040	0.490	0.014
0.750	0.246	0.400	0.076	0.400	0.043	0.580	0.061
0.850	0.291	0.490	0.093	0.490	0.019	0.650	0.274
0.900	0.372	0.580	0.168	0.580	0.161	0.750	0.444
0.960	0.152	0.640	0.368	0.650	-0.025	0.830	0.557
		0.750	0.423	0.750	0.027	0.900	0.583
		0.870	0.502	0.890	0.535	0.960	0.401
		0.930	0.402	0.930	0.448		
		0.960	0.252	0.960	-0.603**		
CN =	0.507		0.698		0.630		0.721

Table D-2. Continued.

Flight 223, Wing sweep = 26°, Time = 10-6-44-500, MINF = 0.705, Camber = 5/16, ALPT = 6.08, BETA = -0.27, QINF = 290.5, RNPU = 2.6E+06, CNWP = 0.4093

η = 0.93		0.76		0.59		0.40	
			Upper Surface				
x/c	CP	*x/c*	CP	*x/c*	CP	*x/c*	CP
0.020	-0.111	0.000	0.835	0.000	5.190**	0.010	-1.063
0.060	-0.345	0.020	-0.434	0.020	-0.521	0.020	-0.632
0.110	-0.496	0.040	-0.433	0.060	-3.664**	0.060	-1.026
0.200	-0.463	0.060	-0.663	0.090	-0.787	0.110	-0.917
0.230	-0.427	0.090	-0.704	0.110	-0.968	0.140	-1.332
0.400	-0.319	0.130	-0.864	0.130	-1.109	0.190	-2.875**
0.490	-0.321	0.150	-1.007	0.150	-1.151	0.250	-0.533
0.590	-0.422	0.200	-0.688	0.210	-0.708	0.400	-0.481
0.630	-0.449	0.250	-0.543	0.250	-0.541	0.490	-0.446
0.700	-0.591	0.260	-0.518	0.340	-0.536	0.580	-0.444
0.750	-0.685	0.280	-0.530	0.370	-0.539	0.650	-0.607
0.810	-0.601	0.290	-0.521	0.400	-0.497	0.700	-0.595
0.840	-0.633	0.310	-0.499	0.410	-0.923**	0.750	-0.714
0.900	-0.388	0.320	-0.501	0.430	-0.529	0.800	-0.758**
0.960	-0.405	0.340	-0.476	0.440	-0.505	0.830	-0.593
		0.350	-0.226**	0.460	-0.515	0.900	-0.444
		0.370	-0.444	0.490	-0.422	0.960	-0.452
		0.380	-0.486	0.500	-0.511		
		0.400	-0.057	0.520	-0.511		
		0.410	-0.480	0.540	-0.516		
		0.430	-0.452	0.550	-0.464		
		0.440	-0.413	0.580	-0.447		
		0.460	-0.447	0.600	-0.537		
		0.470	-0.456	0.610	-0.556		
		0.490	-0.452	0.650	3.775**		
		0.500	-0.461	0.700	-0.699		
		0.520	-0.478	0.750	-0.722		
		0.530	-0.454	0.820	-0.571**		
		0.550	-0.495	0.890	-0.388		
		0.560	-0.515	0.900	-0.421		
		0.580	-0.481	0.960	-0.411		
		0.590	-0.545				
		0.600	-0.519				
		0.640	-0.647				
		0.700	-0.701				
		0.750	0.001**				
		0.820	-0.628				
		0.870	-0.398				
		0.930	-0.371				
		0.960	-0.361				
			Lower Surface				
0.020	-0.239	0.020	0.003	0.020	0.083	0.020	0.360
0.110	-0.015	0.060	0.133	0.060	0.207	0.060	2.316**
0.230	0.066	0.090	0.092	0.090	2.325**	0.110	0.113
0.400	0.090	0.120	0.111	0.120	0.020	0.250	-0.001
0.490	0.118	0.200	0.070	0.200	0.063	0.400	0.020
0.630	2.378**	0.260	0.092	0.250	0.077	0.490	0.048
0.750	0.241	0.400	0.110	0.400	0.056	0.580	0.079
0.850	0.286	0.490	0.123	0.490	0.022	0.650	0.283
0.900	0.357	0.580	0.171	0.580	0.179	0.750	0.461
0.960	0.150	0.640	0.378	0.650	-0.015	0.830	0.558
		0.750	0.433	0.750	0.045	0.900	0.593
		0.870	0.504	0.890	0.544	0.960	0.403
		0.930	0.381	0.930	0.450		
		0.960	0.246	0.960	-0.599**		
CN =	0.558		0.767		0.701		0.809

Table D-2. Continued.

Flight 223, Wing sweep = 26°, Time = 10-6-48-000, MINF = 0.703, Camber = 5/16, ALPT = 7.02, BETA = -0.21, QINF = 288.2, RNPU = 2.6E+06, CNWP = 0.4371

η = 0.93		0.76		0.59		0.40	
			Upper Surface				
x/c	CP	*x/c*	CP	*x/c*	CP	*x/c*	CP
0.020	-0.312	0.000	0.817	0.000	5.240**	0.010	-1.287
0.060	-0.393	0.020	-0.651	0.020	-0.726	0.020	-1.243
0.110	-0.573	0.040	-0.590	0.060	-3.685**	0.060	-1.146
0.200	-0.496	0.060	-0.806	0.090	-0.987	0.110	-1.065
0.230	-0.436	0.090	-0.812	0.110	-0.981	0.140	-1.335
0.400	-0.329	0.130	-0.997	0.130	-1.184	0.190	-2.891**
0.490	-0.323	0.150	-1.182	0.150	-1.251	0.250	-0.587
0.590	-0.426	0.200	-1.117	0.210	-0.951	0.400	-0.521
0.630	-0.457	0.250	-0.590	0.250	-0.560	0.490	-0.455
0.700	-0.596	0.260	-0.556	0.340	-0.564	0.580	-0.457
0.750	-0.692	0.280	-0.572	0.370	-0.569	0.650	-0.631
0.810	-0.642	0.290	-0.529	0.400	-0.524	0.700	-0.620
0.840	-0.677	0.310	-0.520	0.410	-0.922**	0.750	-0.757
0.900	-0.421	0.320	-0.523	0.430	-0.572	0.800	-0.741**
0.960	-0.437	0.340	-0.514	0.440	-0.533	0.830	-0.612
		0.350	-0.205**	0.460	-0.531	0.900	-0.462
		0.370	-0.462	0.490	-0.465	0.960	-0.441
		0.380	-0.525	0.500	-0.551		
		0.400	-0.023	0.520	-0.527		
		0.410	-0.497	0.540	-0.525		
		0.430	-0.462	0.550	-0.477		
		0.440	-0.431	0.580	-0.473		
		0.460	-0.480	0.600	-0.574		
		0.470	-0.477	0.610	-0.581		
		0.490	-0.476	0.650	3.814**		
		0.500	-0.470	0.700	-0.681		
		0.520	-0.515	0.750	-0.728		
		0.530	-0.460	0.820	-0.557**		
		0.550	-0.476	0.890	-0.380		
		0.560	-0.522	0.900	-0.385		
		0.580	-0.483	0.960	-0.380		
		0.590	-0.558				
		0.600	-0.536				
		0.640	-0.653				
		0.700	-0.699				
		0.750	0.024**				
		0.820	-0.610				
		0.870	-0.370				
		0.930	-0.358				
		0.960	-0.364				
			Lower Surface				
0.020	-0.034	0.020	0.143	0.020	0.277	0.020	0.439
0.110	0.021	0.060	0.232	0.060	0.287	0.060	2.343**
0.230	0.121	0.090	0.171	0.090	2.352**	0.110	0.179
0.400	0.091	0.120	0.207	0.120	0.079	0.250	0.046
0.490	0.153	0.200	0.124	0.200	0.115	0.400	0.047
0.630	2.405**	0.260	0.124	0.250	0.131	0.490	0.072
0.750	0.246	0.400	0.130	0.400	0.100	0.580	0.114
0.850	0.287	0.490	0.121	0.490	0.045	0.650	0.309
0.900	0.358	0.580	0.196	0.580	0.188	0.750	0.472
0.960	0.140	0.640	0.388	0.650	0.001	0.830	0.571
		0.750	0.443	0.750	0.038	0.900	0.615
		0.870	0.522	0.890	0.556	0.960	0.408
		0.930	0.404	0.930	0.462		
		0.960	0.256	0.960	-0.595**		
CN =	0.599		0.848		0.774		0.890

Table D-2. Continued.

Flight 223, Wing sweep = 26°, Time = 10-6-54-000, MINF = 0.702, Camber = 5/15, ALPT = 7.98, BETA = -0.21, QINF = 286.1, RNPU = 2.6E+06, CNWP = 0.5183

η = 0.93		0.76		0.59		0.40	
			Upper Surface				
x/c	CP	*x/c*	CP	*x/c*	CP	*x/c*	CP
0.020	-0.647	0.000	0.719	0.000	5.288**	0.010	-1.254
0.060	-0.612	0.020	-1.024	0.020	-1.223	0.020	-1.417
0.110	-0.676	0.040	-0.790	0.060	-3.703**	0.060	-1.392
0.200	-0.569	0.060	-1.062	0.090	-1.269	0.110	-1.515
0.230	-0.537	0.090	-1.125	0.110	-1.362	0.140	-1.694
0.400	-0.369	0.130	-1.207	0.130	-1.443	0.190	-2.902**
0.490	-0.343	0.150	-1.270	0.150	-1.453	0.250	-0.626
0.590	-0.464	0.200	-1.288	0.210	-1.454	0.400	-0.536
0.630	-0.499	0.250	-0.598	0.250	-0.600	0.490	-0.489
0.700	-0.631	0.260	-0.550	0.340	-0.590	0.580	-0.484
0.750	-0.753	0.280	-0.579	0.370	-0.580	0.650	-0.647
0.810	-0.698	0.290	-0.560	0.400	-0.541	0.700	-0.648
0.840	-0.750	0.310	-0.551	0.410	-0.919**	0.750	-0.776
0.900	-0.485	0.320	-0.550	0.430	-0.583	0.800	-0.689**
0.960	-0.498	0.340	-0.544	0.440	-0.556	0.830	-0.607
		0.350	-0.208**	0.460	-0.566	0.900	-0.333
		0.370	-0.495	0.490	-0.427	0.960	-0.290
		0.380	-0.563	0.500	-0.575		
		0.400	0.067	0.520	-0.556		
		0.410	-0.532	0.540	-0.562		
		0.430	-0.499	0.550	-0.509		
		0.440	-0.463	0.580	-0.495		
		0.460	-0.512	0.600	-0.591		
		0.470	-0.512	0.610	-0.602		
		0.490	-0.492	0.650	3.851**		
		0.500	-0.498	0.700	-0.769		
		0.520	-0.501	0.750	-0.763		
		0.530	-0.495	0.820	-0.573**		
		0.550	-0.546	0.890	-0.369		
		0.560	-0.562	0.900	-0.384		
		0.580	-0.533	0.960	-0.351		
		0.590	-0.595				
		0.600	-0.566				
		0.640	-0.679				
		0.700	-0.725				
		0.750	0.023**				
		0.820	-0.632				
		0.870	-0.352				
		0.930	-0.351				
		0.960	-0.357				
			Lower Surface				
0.020	0.080	0.020	0.297	0.020	0.378	0.020	0.578
0.110	0.074	0.060	0.294	0.060	0.368	0.060	2.369**
0.230	0.155	0.090	0.230	0.090	2.379**	0.110	0.253
0.400	0.148	0.120	0.226	0.120	0.143	0.250	0.091
0.490	0.156	0.200	0.158	0.200	0.139	0.400	0.102
0.630	2.432**	0.260	0.172	0.250	0.172	0.490	0.097
0.750	0.217	0.400	0.145	0.400	0.126	0.580	0.135
0.850	0.271	0.490	0.150	0.490	0.047	0.650	0.305
0.900	0.344	0.580	0.202	0.580	0.207	0.750	0.480
0.960	0.120	0.640	0.393	0.650	0.003	0.830	0.595
		0.750	0.464	0.750	0.071	0.900	0.623
		0.870	0.506	0.890	0.555	0.960	0.429
		0.930	0.397	0.930	0.459		
		0.960	0.249	0.960	-0.590**		
CN =	0.676		0.929		0.877		0.982

Table D-2. Continued.

Flight 223, Wing sweep = 26°, Time = 10-6-58-500, MINF = 0.706, Camber = 5/15, ALPT = 9.99, BETA = 0.19, QINF = 292.3, RNPU = 2.6E+06, CNWP = 0.6355

η = 0.93		0.76		0.59		0.40	
			Upper Surface				
x/c	CP	*x/c*	CP	*x/c*	CP	*x/c*	CP
0.020	-1.386	0.000	0.497	0.000	5.152**	0.010	-1.623
0.060	-1.078	0.020	-1.601	0.020	-1.615	0.020	-1.685
0.110	-0.982	0.040	-1.362	0.060	-3.646**	0.060	-1.646
0.200	-1.301	0.060	-1.398	0.090	-1.561	0.110	-1.742
0.230	-0.578	0.090	-1.423	0.110	-1.654	0.140	-1.909
0.400	-0.454	0.130	-1.507	0.130	-1.729	0.190	-2.863**
0.490	-0.437	0.150	-1.607	0.150	-1.701	0.250	-1.214
0.590	-0.538	0.200	-1.615	0.210	-1.562	0.400	-0.488
0.630	-0.568	0.250	-1.174	0.250	-1.065	0.490	-0.436
0.700	-0.675	0.260	-0.975	0.340	-0.956	0.580	-0.451
0.750	-0.829	0.280	-0.955	0.370	-0.875	0.650	-0.600
0.810	-0.822	0.290	-0.883	0.400	-0.780	0.700	-0.600
0.840	-0.828	0.310	-0.805	0.410	-0.922**	0.750	-0.655
0.900	-0.632	0.320	-0.756	0.430	-0.733	0.800	-0.570**
0.960	-0.657	0.340	-0.664	0.440	-0.680	0.830	-0.534
		0.350	-0.225**	0.460	-0.662	0.900	-0.313
		0.370	-0.484	0.490	-0.550	0.960	-0.295
		0.380	-0.519	0.500	-0.627		
		0.400	-0.024	0.520	-0.625		
		0.410	-0.488	0.540	-0.611		
		0.430	-0.465	0.550	-0.551		
		0.440	-0.450	0.580	-0.551		
		0.460	-0.490	0.600	-0.623		
		0.470	-0.518	0.610	-0.594		
		0.490	-0.491	0.650	3.746**		
		0.500	-0.521	0.700	-0.722		
		0.520	-0.492	0.750	-0.765		
		0.530	-0.513	0.820	-0.526**		
		0.550	-0.549	0.890	-0.335		
		0.560	-0.578	0.900	-0.304		
		0.580	-0.554	0.960	-0.271		
		0.590	-0.610				
		0.600	-0.547				
		0.640	-0.712				
		0.700	-0.773				
		0.750	0.037**				
		0.820	-0.584				
		0.870	-0.381				
		0.930	-0.310				
		0.960	-0.301				
			Lower Surface				
0.020	0.153	0.020	0.511	0.020	0.552	0.020	0.712
0.110	0.149	0.060	0.418	0.060	0.477	0.060	2.296**
0.230	0.221	0.090	0.338	0.090	2.306**	0.110	0.354
0.400	0.133	0.120	0.349	0.120	0.237	0.250	0.169
0.490	0.168	0.200	0.229	0.200	0.221	0.400	0.156
0.630	2.358**	0.260	0.236	0.250	0.259	0.490	0.156
0.750	0.227	0.400	0.191	0.400	0.181	0.580	0.175
0.850	0.252	0.490	0.200	0.490	0.047	0.650	0.344
0.900	0.315	0.580	0.225	0.580	0.263	0.750	0.507
0.960	0.085	0.640	0.407	0.650	0.018	0.830	0.609
		0.750	0.451	0.750	0.092	0.900	0.638
		0.870	0.518	0.890	0.573	0.960	0.443
		0.930	0.396	0.930	0.479		
		0.960	0.255	0.960	-0.600**		
CN =	0.853		1.094		1.040		1.113

Table D-2. Continued.

Flight 223, Wing sweep = 26°, Time = 10-7-4-000, MINF = 0.703, Camber = 5/16, ALPT = 11.03, BETA = -0.10, QINF = 295.0, RNPU = 2.7E+06, CNWP = 0.6281

η = 0.93		0.76		0.59		0.40	
			Upper Surface				
x/c	CP	*x/c*	CP	*x/c*	CP	*x/c*	CP
0.020	-1.556	0.000	0.386	0.000	5.051**	0.010	-1.716
0.060	-1.363	0.020	-1.856	0.020	-1.735	0.020	-1.819
0.110	-1.117	0.040	-1.552	0.060	-3.668**	0.060	-1.818
0.200	-0.753	0.060	-1.570	0.090	-1.697	0.110	-1.866
0.230	-0.553	0.090	-1.557	0.110	-1.770	0.140	-1.890
0.400	-0.469	0.130	-1.617	0.130	-1.538	0.190	-2.891**
0.490	-0.439	0.150	-1.729	0.150	-1.196	0.250	-1.285
0.590	-0.548	0.200	-1.731	0.210	-1.170	0.400	-0.400
0.630	-0.579	0.250	-1.067	0.250	-1.061	0.490	-0.413
0.700	-0.680	0.260	-0.981	0.340	-1.035	0.580	-0.427
0.750	-0.897	0.280	-0.953	0.370	-0.975	0.650	-0.513
0.810	-0.816	0.290	-0.864	0.400	-0.881	0.700	-0.502
0.840	-0.865	0.310	-0.785	0.410	-0.968**	0.750	-0.533
0.900	-0.688	0.320	-0.712	0.430	-0.905	0.800	-0.524**
0.960	-0.736	0.340	-0.680	0.440	-0.853	0.830	-0.473
		0.350	-0.219**	0.460	-0.839	0.900	-0.336
		0.370	-0.557	0.490	-0.755	0.960	-0.305
		0.380	-0.611	0.500	-0.802		
		0.400	-0.082	0.520	-0.788		
		0.410	-0.565	0.540	-0.752		
		0.430	-0.535	0.550	-0.676		
		0.440	-0.491	0.580	-0.633		
		0.460	-0.539	0.600	-0.690		
		0.470	-0.540	0.610	-0.638		
		0.490	-0.511	0.650	3.658**		
		0.500	-0.518	0.700	-0.606		
		0.520	-0.515	0.750	-0.611		
		0.530	-0.514	0.820	-0.488**		
		0.550	-0.552	0.890	-0.418		
		0.560	-0.565	0.900	-0.400		
		0.580	-0.536	0.960	-0.341		
		0.590	-0.584				
		0.600	-0.567				
		0.640	-0.630				
		0.700	-0.694				
		0.750	0.057**				
		0.820	-0.441				
		0.870	-0.265				
		0.930	-0.299				
		0.960	-0.301				
			Lower Surface				
0.020	0.327	0.020	0.597	0.020	0.614	0.020	0.751
0.110	0.181	0.060	0.488	0.060	0.519	0.060	2.221**
0.230	0.258	0.090	0.372	0.090	2.230**	0.110	0.411
0.400	0.151	0.120	0.343	0.120	0.285	0.250	0.207
0.490	0.194	0.200	0.262	0.200	0.287	0.400	0.190
0.630	2.282**	0.260	0.268	0.250	0.284	0.490	0.174
0.750	0.237	0.400	0.217	0.400	0.209	0.580	0.183
0.850	0.258	0.490	0.203	0.490	0.066	0.650	0.361
0.900	0.318	0.580	0.242	0.580	0.269	0.750	0.518
0.960	0.095	0.640	0.419	0.650	0.023	0.830	0.609
		0.750	0.459	0.750	0.103	0.900	0.646
		0.870	0.514	0.890	0.587	0.960	0.432
		0.930	0.405	0.930	0.487		
		0.960	0.261	0.960	-0.649**		
CN =	0.883		1.116		1.057		1.124

Table D-2. Continued.

Flight 223, Wing sweep = 26°, Time = 10-7-12-500, MINF = 0.693, Camber = 5/16, ALPT = 11.95, BETA = -0.56, QINF = 296.7, RNPU = 2.7E+06, CNWP = 0.6443

η = 0.93		0.76		0.59		0.40	
			Upper Surface				
x/c	CP	*x/c*	CP	*x/c*	CP	*x/c*	CP
0.020	-1.821	0.000	0.183	0.000	4.925**	0.010	-1.989
0.060	-1.696	0.020	-2.007	0.020	-1.927	0.020	-2.060
0.110	-1.376	0.040	-1.790	0.060	-3.744**	0.060	-1.985
0.200	-0.726	0.060	-1.805	0.090	-1.706	0.110	-2.022
0.230	-0.652	0.090	-1.722	0.110	-1.342	0.140	-1.672
0.400	-0.497	0.130	-1.602	0.130	-1.227	0.190	-2.972**
0.490	-0.475	0.150	-1.281	0.150	-1.164	0.250	-1.387
0.590	-0.550	0.200	-1.220	0.210	-1.148	0.400	-0.484
0.630	-0.592	0.250	-1.056	0.250	-1.042	0.490	-0.447
0.700	-0.700	0.260	-0.929	0.340	-1.037	0.580	-0.396
0.750	-1.011	0.280	-0.930	0.370	-0.986	0.650	-0.488
0.810	-0.914	0.290	-0.842	0.400	-0.936	0.700	-0.502
0.840	-1.047	0.310	-0.782	0.410	-1.060**	0.750	-0.484
0.900	-0.695	0.320	-0.766	0.430	-0.939	0.800	-0.536**
0.960	-0.633	0.340	-0.739	0.440	-0.878	0.830	-0.470
		0.350	-0.275**	0.460	-0.870	0.900	-0.424
		0.370	-0.654	0.490	-0.836	0.960	-0.418
		0.380	-0.718	0.500	-0.844		
		0.400	-0.179	0.520	-0.827		
		0.410	-0.731	0.540	-0.811		
		0.430	-0.658	0.550	-0.743		
		0.440	-0.645	0.580	-0.709		
		0.460	-0.628	0.600	-0.755		
		0.470	-0.624	0.610	-0.711		
		0.490	-0.605	0.650	3.540**		
		0.500	-0.607	0.700	-0.649		
		0.520	-0.513	0.750	-0.676		
		0.530	-0.580	0.820	-0.566**		
		0.550	-0.594	0.890	-0.424		
		0.560	-0.633	0.900	-0.425		
		0.580	-0.575	0.960	-0.352		
		0.590	-0.639				
		0.600	-0.607				
		0.640	-0.568				
		0.700	-0.585				
		0.750	0.048**				
		0.820	-0.318				
		0.870	-0.313				
		0.930	-0.362				
		0.960	-0.352				
			Lower Surface				
0.020	0.432	0.020	0.666	0.020	0.665	0.020	0.783
0.110	0.205	0.060	0.495	0.060	0.554	0.060	2.111**
0.230	0.263	0.090	0.403	0.090	2.120**	0.110	0.462
0.400	0.131	0.120	0.362	0.120	0.318	0.250	0.243
0.490	0.139	0.200	0.270	0.200	0.256	0.400	0.213
0.630	2.171**	0.260	0.283	0.250	0.303	0.490	0.187
0.750	0.227	0.400	0.226	0.400	0.209	0.580	0.198
0.850	0.244	0.490	0.205	0.490	0.090	0.650	0.358
0.900	0.300	0.580	0.240	0.580	0.270	0.750	0.511
0.960	0.086	0.640	0.412	0.650	0.029	0.830	0.626
		0.750	0.447	0.750	0.102	0.900	0.634
		0.870	0.512	0.890	0.568	0.960	0.417
		0.930	0.383	0.930	0.476		
		0.960	0.243	0.960	-0.743**		
CN =	0.940		1.097		1.091		1.176

Table D-2. Continued.

Flight 204, Wing sweep = 26°, Time = 8-30-51-000, MINF = 0.692, Camber = 5/15, ALPT = 3.04, BETA = -0.24, QINF = 282.6, RNPU = 2.6E+06, CNWP = 0.3626

η = 0.93		0.76		0.59		0.40	
			Upper Surface				
x/c	CP	*x/c*	CP	*x/c*	CP	*x/c*	CP
0.020	0.319	0.000	0.455	0.000	1.299**	0.010	-0.203
0.060	-0.067	0.020	0.175	0.020	0.150	0.020	-0.107**
0.110	-0.222	0.040	0.138	0.060	-0.018**	0.060	-0.508**
0.200	-0.296	0.060	-0.137	0.090	-0.420	0.110	-0.632
0.230	-0.344	0.090	-0.277	0.110	-0.502	0.140	-0.579
0.400	-0.221	0.130	-0.397	0.130	-0.684	0.190	-2.983**
0.490	-0.229	0.150	-0.454	0.150	-0.566	0.250	-0.395
0.590	-0.423	0.200	-0.441	0.210	-0.472	0.400	-0.349
0.630	-0.410	0.250	-0.425	0.250	-0.390	0.490	-0.430
0.700	-0.562	0.260	-0.345	0.340	-0.372	0.580	-0.477
0.750	-0.779	0.280	-0.344	0.370	-0.463	0.650	-0.524
0.810	-0.621	0.290	-0.344	0.400	-0.381	0.700	-0.588
0.840	-0.703	0.310	-0.326	0.410	-0.389	0.750	-0.768
0.900	-0.346	0.320	-0.406	0.430	-0.397	0.800	-0.858
0.960	-0.323	0.340	-0.341	0.440	-0.401	0.830	-0.681
		0.350	-0.168**	0.460	-0.216	0.900	-0.499
		0.370	-0.405	0.490	-0.428	0.960	-0.507**
		0.380	-0.365	0.500	-0.448		
		0.400	-0.384	0.520	-0.460		
		0.410	-0.405	0.540	-0.395		
		0.430	-0.396	0.550	-0.397		
		0.440	-0.404	0.580	-0.428		
		0.460	-0.404	0.600	-0.457		
		0.470	-0.352	0.610	-0.542		
		0.490	-0.361	0.650	0.068**		
		0.500	-0.357	0.700	-0.614		
		0.520	-0.350	0.750	-0.630		
		0.530	-0.357	0.820	-0.334		
		0.550	-0.446	0.890	-0.403		
		0.560	-0.397	0.900	-0.419		
		0.580	-0.445	0.960	-0.390		
		0.590	-0.518				
		0.600	-0.513				
		0.640	-0.654				
		0.700	-0.648				
		0.750	0.013**				
		0.820	-0.699				
		0.870	-0.439				
		0.930	-0.388				
		0.960	-0.310				
			Lower Surface				
0.020	-0.608	0.020	-0.585	0.020	-0.409	0.020	-0.281
0.110	-0.107	0.060	-0.164	0.060	-0.135	0.060	0.052
0.230	-0.059	0.090	-0.145	0.090	-0.082	0.110	-0.141
0.400	0.015	0.120	-0.006**	0.120	-0.063	0.250	-0.099
0.490	0.059	0.200	0.014	0.200	0.080	0.400	-0.042
0.630	3.997**	0.260	0.022	0.250	-0.011	0.490	-0.064
0.750	0.226	0.400	-0.005	0.400	0.039	0.580	0.079
0.850	0.252	0.490	0.117	0.490	-0.004	0.650	0.202
0.900	0.336	0.580	0.105	0.580	0.157	0.750	0.467
0.960	0.143	0.640	0.395	0.650	0.064	0.830	0.453
		0.750	0.429	0.750	0.049**	0.900	0.536
		0.870	0.533	0.890	0.586	0.960	0.365
		0.930	0.357	0.930	0.405		
		0.960	0.215	0.960	0.219		
CN =	0.425		0.576		0.556		0.595

Table D-2. Continued.

Flight 204, Wing sweep = 26°, Time = 8-30-57-500, MINF = 0.697, Camber = 5/15, ALPT = 5.04, BETA = -0.12, QINF = 284.6, RNPU = 2.6E+06, CNWP = 0.4324

η = 0.93		0.76		0.59		0.40	
			Upper Surface				
x/c	CP	*x/c*	CP	*x/c*	CP	*x/c*	CP
0.020	0.070	0.000	0.829	0.000	1.366**	0.010	-0.661
0.060	-0.167	0.020	-0.088	0.020	-0.249	0.020	-0.458**
0.110	-0.293	0.040	-0.141	0.060	-0.166**	0.060	-0.782**
0.200	-0.392	0.060	-0.409	0.090	-0.631	0.110	-0.860
0.230	-0.400	0.090	-0.526	0.110	-0.762	0.140	-0.779
0.400	-0.258	0.130	-0.648	0.130	-0.918	0.190	-2.940**
0.490	-0.252	0.150	-0.674	0.150	-0.670	0.250	-0.519
0.590	-0.371	0.200	-0.537	0.210	-0.633	0.400	-0.406
0.630	-0.410	0.250	-0.445	0.250	-0.485	0.490	-0.389
0.700	-0.572	0.260	-0.459	0.340	-0.474	0.580	-0.435
0.750	-0.644	0.280	-0.455	0.370	-0.461	0.650	-0.547
0.810	-0.618	0.290	-0.426	0.400	-0.397	0.700	-0.545
0.840	-0.692	0.310	-0.392	0.410	-0.435	0.750	-0.711
0.900	-0.320	0.320	-0.433	0.430	-0.452	0.800	-0.740
0.960	-0.306	0.340	-0.402	0.440	-0.438	0.830	-0.578
		0.350	-0.103**	0.460	-0.205	0.900	-0.431
		0.370	-0.413	0.490	-0.422	0.960	-0.423**
		0.380	-0.413	0.500	-0.437		
		0.400	-0.349	0.520	-0.445		
		0.410	-0.379	0.540	-0.442		
		0.430	-0.396	0.550	-0.425		
		0.440	-0.375	0.580	-0.401		
		0.460	-0.366	0.600	-0.483		
		0.470	-0.389	0.610	-0.512		
		0.490	-0.389	0.650	0.085**		
		0.500	-0.381	0.700	-0.646		
		0.520	-0.391	0.750	-0.643		
		0.530	-0.389	0.820	-0.255		
		0.550	-0.393	0.890	-0.349		
		0.560	-0.431	0.900	-0.363		
		0.580	-0.393	0.960	-0.319		
		0.590	-0.463				
		0.600	-0.453				
		0.640	-0.582				
		0.700	-0.656				
		0.750	0.110**				
		0.820	-0.640				
		0.870	-0.346				
		0.930	-0.307				
		0.960	-0.305				
			Lower Surface				
0.020	-0.269	0.020	-0.121	0.020	-0.024	0.020	0.217
0.110	-0.018	0.060	0.112	0.060	0.136	0.060	0.104
0.230	0.072	0.090	0.061	0.090	0.153	0.110	0.107
0.400	0.120	0.120	0.104**	0.120	0.076	0.250	-0.001
0.490	0.160	0.200	0.097	0.200	0.226	0.400	0.026
0.630	3.991**	0.260	0.089	0.250	0.087	0.490	0.065
0.750	0.286	0.400	0.105	0.400	0.076	0.580	0.110
0.850	0.327	0.490	0.138	0.490	0.116	0.650	0.314
0.900	0.403	0.580	0.206	0.580	0.189	0.750	0.526
0.960	0.196	0.640	0.398	0.650	0.104	0.830	0.566
		0.750	0.439	0.750	0.055**	0.900	0.633
		0.870	0.551	0.890	0.618	0.960	0.433
		0.930	0.441	0.930	0.500		
		0.960	0.300	0.960	0.311		
CN =	0.525		0.689		0.667		0.721

Table D-2. Continued.

Flight 204, Wing sweep = 26°, Time = 8-31-0-000, MINF = 0.692, Camber = 5/15, ALPT = 4.07, BETA = -0.07, QINF = 278.7, RNPU = 2.5E+06, CNWP = 0.4111

η = 0.93		0.76		0.59		0.40	
			Upper Surface				
x/c	CP	*x/c*	CP	*x/c*	CP	*x/c*	CP
0.020	0.240	0.000	0.716	0.000	1.424**	0.010	-0.399
0.060	-0.081	0.020	0.087	0.020	-0.039	0.020	-0.282**
0.110	-0.262	0.040	0.020	0.060	-0.020**	0.060	-0.612**
0.200	-0.333	0.060	-0.251	0.090	-0.472	0.110	-0.731
0.230	-0.290	0.090	-0.436	0.110	-0.624	0.140	-0.712
0.400	-0.227	0.130	-0.511	0.130	-0.781	0.190	-2.988**
0.490	-0.226	0.150	-0.537	0.150	-0.621	0.250	-0.471
0.590	-0.338	0.200	-0.439	0.210	-0.578	0.400	-0.378
0.630	-0.442	0.250	-0.400	0.250	-0.437	0.490	-0.358
0.700	-0.560	0.260	-0.373	0.340	-0.436	0.580	-0.396
0.750	-0.708	0.280	-0.431	0.370	-0.467	0.650	-0.548
0.810	-0.616	0.290	-0.390	0.400	-0.358	0.700	-0.540
0.840	-0.699	0.310	-0.361	0.410	-0.391	0.750	-0.696
0.900	-0.268	0.320	-0.381	0.430	-0.429	0.800	-0.741
0.960	-0.252	0.340	-0.368	0.440	-0.450	0.830	-0.552
		0.350	-0.088**	0.460	-0.147	0.900	-0.453
		0.370	-0.402	0.490	-0.375	0.960	-0.423**
		0.380	-0.378	0.500	-0.401		
		0.400	-0.310	0.520	-0.404		
		0.410	-0.347	0.540	-0.424		
		0.430	-0.371	0.550	-0.401		
		0.440	-0.337	0.580	-0.422		
		0.460	-0.398	0.600	-0.455		
		0.470	-0.356	0.610	-0.494		
		0.490	-0.390	0.650	0.090**		
		0.500	-0.401	0.700	-0.621		
		0.520	-0.405	0.750	-0.676		
		0.530	-0.363	0.820	-0.230		
		0.550	-0.372	0.890	-0.309		
		0.560	-0.439	0.900	-0.331		
		0.580	-0.382	0.960	-0.281		
		0.590	-0.450				
		0.600	-0.468				
		0.640	-0.582				
		0.700	-0.655				
		0.750	0.077**				
		0.820	-0.622				
		0.870	-0.382				
		0.930	-0.290				
		0.960	-0.285				
			Lower Surface				
0.020	-0.377	0.020	-0.317	0.020	-0.224	0.020	0.034
0.110	-0.067	0.060	0.025	0.060	0.061	0.060	0.074
0.230	0.064	0.090	-0.010	0.090	0.073	0.110	0.021
0.400	0.118	0.120	0.058**	0.120	0.031	0.250	-0.036
0.490	0.128	0.200	0.075	0.200	0.202	0.400	-0.005
0.630	4.090**	0.260	0.052	0.250	0.003	0.490	0.011
0.750	0.311	0.400	0.075	0.400	0.067	0.580	0.066
0.850	0.338	0.490	0.117	0.490	0.099	0.650	0.312
0.900	0.373	0.580	0.174	0.580	0.137	0.750	0.485
0.960	0.222	0.640	0.418	0.650	0.086	0.830	0.574
		0.750	0.445	0.750	0.102**	0.900	0.636
		0.870	0.521	0.890	0.607	0.960	0.457
		0.930	0.450	0.930	0.498		
		0.960	0.313	0.960	0.321		
CN =	0.484		0.629		0.598		0.658

Table D-2. Continued.

Flight 204, Wing sweep = 26°, Time = 8-31-8-500, MINF = 0.692, Camber = 5/15, ALPT = 8.21, BETA = 0.25, QINF = 279.4, RNPU = 2.6E+06, CNWP = 0.6380

η = 0.93		0.76		0.59		0.40	
			Upper Surface				
x/c	CP	*x/c*	CP	*x/c*	CP	*x/c*	CP
0.020	-0.962	0.000	0.676	0.000	1.224**	0.010	-1.604
0.060	-0.707	0.020	-1.343	0.020	-1.467	0.020	-1.546**
0.110	-0.728	0.040	-0.963	0.060	-0.694**	0.060	-1.592**
0.200	-0.615	0.060	-1.053	0.090	-1.338	0.110	-1.664
0.230	-0.538	0.090	-1.237	0.110	-1.448	0.140	-1.829
0.400	-0.376	0.130	-1.299	0.130	-1.557	0.190	-2.983**
0.490	-0.336	0.150	-1.370	0.150	-1.555	0.250	-0.667
0.590	-0.449	0.200	-1.359	0.210	-1.548	0.400	-0.521
0.630	-0.486	0.250	-0.603	0.250	-0.711	0.490	-0.470
0.700	-0.659	0.260	-0.556	0.340	-0.553	0.580	-0.528
0.750	-0.782	0.280	-0.551	0.370	-0.560	0.650	-0.644
0.810	-0.702	0.290	-0.548	0.400	-0.527	0.700	-0.612
0.840	-0.781	0.310	-0.533	0.410	-0.543	0.750	-0.743
0.900	-0.508	0.320	-0.542	0.430	-0.531	0.800	-0.599
0.960	-0.528	0.340	-0.529	0.440	-0.567	0.830	-0.523
		0.350	-0.083**	0.460	-0.306	0.900	-0.290
		0.370	-0.526	0.490	-0.532	0.960	-0.255**
		0.380	-0.540	0.500	-0.543		
		0.400	-0.457	0.520	-0.534		
		0.410	-0.522	0.540	-0.532		
		0.430	-0.500	0.550	-0.517		
		0.440	-0.473	0.580	-0.493		
		0.460	-0.473	0.600	-0.583		
		0.470	-0.510	0.610	-0.611		
		0.490	-0.483	0.650	0.078**		
		0.500	-0.471	0.700	-0.709		
		0.520	-0.479	0.750	-0.710		
		0.530	-0.471	0.820	-0.229		
		0.550	-0.474	0.890	-0.306		
		0.560	-0.518	0.900	-0.297		
		0.580	-0.489	0.960	-0.287		
		0.590	-0.544				
		0.600	-0.550				
		0.640	-0.666				
		0.700	-0.727				
		0.750	0.120**				
		0.820	-0.597				
		0.870	-0.286				
		0.930	-0.285				
		0.960	-0.284				
			Lower Surface				
0.020	0.208	0.020	0.452	0.020	0.471	0.020	0.643
0.110	0.140	0.060	0.373	0.060	0.455	0.060	0.102
0.230	0.226	0.090	0.321	0.090	0.381	0.110	0.279
0.400	0.154	0.120	0.290**	0.120	0.298	0.250	0.157
0.490	0.179	0.200	0.239	0.200	0.374	0.400	0.148
0.630	4.077**	0.260	0.219	0.250	0.235	0.490	0.178
0.750	0.270	0.400	0.223	0.400	0.211	0.580	0.178
0.850	0.275	0.490	0.221	0.490	0.146	0.650	0.355
0.900	0.363	0.580	0.250	0.580	0.251	0.750	0.542
0.960	0.123	0.640	0.437	0.650	0.114	0.830	0.615
		0.750	0.481	0.750	0.053**	0.900	0.676
		0.870	0.553	0.890	0.626	0.960	0.456
		0.930	0.426	0.930	0.497		
		0.960	0.305	0.960	0.310		
CN =	0.730		0.996		0.962		0.964

Table D-2. Continued.

Flight 204, Wing sweep = 26°, Time = 8-31-11-500, MINF = 0.692, Camber = 5/15, ALPT = 9.29, BETA = 0.34, QINF = 280.9, RNPU = 2.6E+06, CNWP = 0.7725

η = 0.93		0.76		0.59		0.40	
			Upper Surface				
x/c	CP	*x/c*	CP	*x/c*	CP	*x/c*	CP
0.020	-1.456	0.000	0.524	0.000	1.123**	0.010	-1.756
0.060	-0.893	0.020	-1.624	0.020	-1.659	0.020	-1.760**
0.110	-0.799	0.040	-1.319	0.060	-0.921**	0.060	-1.825**
0.200	-0.639	0.060	-1.351	0.090	-1.586	0.110	-1.837
0.230	-0.603	0.090	-1.443	0.110	-1.680	0.140	-1.568
0.400	-0.451	0.130	-1.474	0.130	-1.762	0.190	-2.986**
0.490	-0.409	0.150	-1.552	0.150	-1.733	0.250	-1.119
0.590	-0.517	0.200	-1.613	0.210	-1.657	0.400	-0.500
0.630	-0.562	0.250	-0.954	0.250	-1.066	0.490	-0.466
0.700	-0.685	0.260	-0.868	0.340	-0.684	0.580	-0.498
0.750	-0.821	0.280	-0.770	0.370	-0.630	0.650	-0.597
0.810	-0.748	0.290	-0.639	0.400	-0.569	0.700	-0.602
0.840	-0.828	0.310	-0.537	0.410	-0.571	0.750	-0.697
0.900	-0.591	0.320	-0.508	0.430	-0.580	0.800	-0.562
0.960	-0.616	0.340	-0.456	0.440	-0.570	0.830	-0.533
		0.350	-0.049**	0.460	-0.317	0.900	-0.259
		0.370	-0.466	0.490	-0.527	0.960	-0.260**
		0.380	-0.512	0.500	-0.564		
		0.400	-0.467	0.520	-0.559		
		0.410	-0.491	0.540	-0.570		
		0.430	-0.483	0.550	-0.564		
		0.440	-0.501	0.580	-0.551		
		0.460	-0.482	0.600	-0.592		
		0.470	-0.508	0.610	-0.563		
		0.490	-0.503	0.650	0.166**		
		0.500	-0.504	0.700	-0.702		
		0.520	-0.490	0.750	-0.723		
		0.530	-0.503	0.820	-0.201		
		0.550	-0.505	0.890	-0.276		
		0.560	-0.566	0.900	-0.264		
		0.580	-0.518	0.960	-0.221		
		0.590	-0.582				
		0.600	-0.557				
		0.640	-0.700				
		0.700	-0.770				
		0.750	0.142**				
		0.820	-0.630				
		0.870	-0.367				
		0.930	-0.296				
		0.960	-0.295				
			Lower Surface				
0.020	0.327	0.020	0.584	0.020	0.563	0.020	0.738
0.110	0.179	0.060	0.457	0.060	0.492	0.060	0.067
0.230	0.268	0.090	0.371	0.090	0.455	0.110	0.378
0.400	0.168	0.120	0.331**	0.120	0.328	0.250	0.184
0.490	0.181	0.200	0.288	0.200	0.389	0.400	0.173
0.630	4.035**	0.260	0.275	0.250	0.268	0.490	0.177
0.750	0.278	0.400	0.171	0.400	0.226	0.580	0.153
0.850	0.260	0.490	0.177	0.490	0.125	0.650	0.388
0.900	0.346	0.580	0.268	0.580	0.272	0.750	0.566
0.960	0.126	0.640	0.449	0.650	0.133	0.830	0.642
		0.750	0.472	0.750	0.033**	0.900	0.621
		0.870	0.552	0.890	0.649	0.960	0.486
		0.930	0.377	0.930	0.536		
		0.960	0.299	0.960	0.311		
CN =	0.812		1.090		1.044		1.043

Table D-2. Concluded.

Flight 204, Wing sweep = 26°, Time = 8-31-17-500, MINF = 0.687, Camber = 5/16, ALPT = 11.05, BETA = -0.41, QINF = 283.8, RNPU = 2.6E+06, CNWP = 0.7577

η = 0.93		0.76		0.59		0.40	
			Upper Surface				
x/c	CP	*x/c*	CP	*x/c*	CP	*x/c*	CP
0.020	-1.764	0.000	0.250	0.000	0.980**	0.010	-2.028
0.060	-1.649	0.020	-1.944	0.020	-1.912	0.020	-1.998**
0.110	-1.106	0.040	-1.675	0.060	-1.055**	0.060	-2.042**
0.200	-0.732	0.060	-1.708	0.090	-1.840	0.110	-2.065
0.230	-0.686	0.090	-1.773	0.110	-1.581	0.140	-1.608
0.400	-0.464	0.130	-1.702	0.130	-1.231	0.190	-3.024**
0.490	-0.424	0.150	-1.686	0.150	-1.153	0.250	-1.265
0.590	-0.526	0.200	-1.289	0.210	-1.151	0.400	-0.457
0.630	-0.574	0.250	-1.040	0.250	-1.086	0.490	-0.453
0.700	-0.691	0.260	-0.957	0.340	-0.965	0.580	-0.474
0.750	-0.943	0.280	-0.871	0.370	-0.933	0.650	-0.510
0.810	-0.861	0.290	-0.760	0.400	-0.875	0.700	-0.545
0.840	-0.952	0.310	-0.710	0.410	-0.844	0.750	-0.572
0.900	-0.668	0.320	-0.666	0.430	-0.822	0.800	-0.511
0.960	-0.755	0.340	-0.651	0.440	-0.810	0.830	-0.436
		0.350	-0.094**	0.460	-0.536	0.900	-0.303
		0.370	-0.581	0.490	-0.762	0.960	-0.350**
		0.380	-0.599	0.500	-0.729		
		0.400	-0.536	0.520	-0.711		
		0.410	-0.532	0.540	-0.697		
		0.430	-0.538	0.550	-0.719		
		0.440	-0.537	0.580	-0.640		
		0.460	-0.517	0.600	-0.649		
		0.470	-0.526	0.610	-0.608		
		0.490	-0.523	0.650	0.131**		
		0.500	-0.495	0.700	-0.548		
		0.520	-0.488	0.750	-0.537		
		0.530	-0.486	0.820	-0.155		
		0.550	-0.490	0.890	-0.337		
		0.560	-0.506	0.900	-0.383		
		0.580	-0.459	0.960	-0.274		
		0.590	-0.519				
		0.600	-0.497				
		0.640	-0.529				
		0.700	-0.585				
		0.750	0.149**				
		0.820	-0.315				
		0.870	-0.209				
		0.930	-0.255				
		0.960	-0.253				
			Lower Surface				
0.020	0.450	0.020	0.731	0.020	0.647	0.020	0.822
0.110	0.254	0.060	0.566	0.060	0.581	0.060	0.059
0.230	0.339	0.090	0.467	0.090	0.512	0.110	0.410
0.400	0.178	0.120	0.374**	0.120	0.402	0.250	0.277
0.490	0.210	0.200	0.324	0.200	0.421	0.400	0.214
0.630	3.926**	0.260	0.337	0.250	0.312	0.490	0.248
0.750	0.267	0.400	0.289	0.400	0.253	0.580	0.246
0.850	0.264	0.490	0.287	0.490	0.185	0.650	0.361
0.900	0.363	0.580	0.307	0.580	0.270	0.750	0.553
0.960	0.137	0.640	0.479	0.650	0.139	0.830	0.635
		0.750	0.451	0.750	-0.036**	0.900	0.714
		0.870	0.590	0.890	0.681	0.960	0.501
		0.930	0.434	0.930	0.546		
		0.960	0.330	0.960	0.274		
CN =	0.955		1.128		1.100		1.097

APPENDIX E

Wing Pressure Coefficients for Nominal Dynamic Pressure of 300 lb/ft^2 and Mach Number of 0.80.

Leading-edge wing sweep is 26°. Table E-1 contains a summary of the data listing in table E-2. The asterisks (*) in table E-2 indicate invalid values. Camber is $\delta_{LE/TE}$. Refer to Nomenclature for definitions.

Table E-1. Summary of listed data.

Flight	Time	MINF	Camber	ALPT	BETA	QINF	RNPU	CNWP
216	10-34-46-000	0.805	0/2	4.96	-0.07	304.9	2.5E+06	0.2281
216	10-35-11-500	0.801	0/2	6.11	-0.67	302.0	2.5E+06	0.2931
216	10-35-16-500	0.800	0/2	7.12	-0.53	299.9	2.5E+06	0.3013
216	10-35-20-000	0.802	0/2	7.97	-0.18	299.8	2.5E+06	0.3300
216	10-35-23-500	0.801	0/2	10.12	-0.47	298.1	2.4E+06	0.4449
216	10-36-34-000	0.800	0/2	7.98	-0.15	296.7	2.4E+06	0.3491
216	10-36-38-500	0.802	0/2	9.01	0.43	297.4	2.4E+06	0.4157
216	10-36-44-000	0.812	0/2	10.15	-0.76	305.2	2.5E+06	0.4726
216	10-36-47-500	0.801	0/2	12.10	0.83	298.6	2.4E+06	0.2710
216	10-36-50-500	0.790	0/2	11.97	0.25	291.5	2.4E+06	0.2583
216	10-9-26-500	0.792	0/2	4.03	-0.12	283.0	2.3E+06	0.1794
224	10-3-54-500	0.802	0/2	8.01	0.11	292.5	2.4E+06	0.3170
224	10-4-3-000	0.807	0/2	10.17	0.19	298.9	2.4E+06	0.4287
216	10-32-45-500	0.803	5/2	5.49	0.05	303.4	2.5E+06	0.2974
216	10-33-21-500	0.806	5/2	6.89	-0.59	305.6	2.5E+06	0.3231
191	11-2-4-000	0.790	5/2	5.99	0.21	291.5	2.4E+06	0.3648
191	11-2-10-500	0.789	5/2	7.09	0.42	291.4	2.4E+06	0.3776
191	11-2-17-500	0.788	5/2	8.09	0.42	292.3	2.4E+06	0.4171
191	11-2-24-000	0.790	5/2	10.07	0.36	299.3	2.5E+06	0.4967
216	10-12-44-000	0.801	5/6	5.01	-0.10	302.1	2.5E+06	0.3585
216	10-13-5-500	0.811	5/6	6.08	0.11	308.1	2.5E+06	0.3883
195	9-49-26-500	0.811	5/6	7.02	0.13	280.8	2.3E+06	0.1721
195	9-49-39-500	0.800	5/6	8.11	0.02	275.5	2.3E+06	0.4730
195	9-49-45-000	0.798	5/6	9.07	0.10	276.4	2.3E+06	0.5332
195	9-49-52-000	0.797	5/6	10.01	-0.16	277.7	2.3E+06	0.6196
195	10-12-53-000	0.802	5/10	5.00	-0.24	292.2	2.4E+06	0.3467
195	10-13-9-500	0.797	5/10	7.05	-0.16	286.8	2.4E+06	0.4229
195	10-13-22-000	0.786	5/10	7.08	-0.19	276.7	2.3E+06	0.4066
195	10-13-56-500	0.795	5/10	8.14	-0.03	282.1	2.3E+06	0.5267
195	10-14-6-000	0.798	5/10	9.00	-0.01	284.3	2.3E+06	0.6346

Table E-1. Continued.

Flight	Time	MINF	Camber	ALPT	BETA	QINF	RNPU	CNWP
195	10-14-10-500	0.798	5/10	10.22	-0.16	286.9	2.4E+06	0.7158
224	10-1-11-500	0.798	5/10	3.06	-0.07	296.9	2.4E+06	0.2403
224	10-1-36-500	0.800	5/11	8.07	-0.27	295.0	2.4E+06	0.5238
211	10-48-54-500	0.803	5/10	4.10	0.25	302.9	2.5E+06	0.3075
224	10-2-44-000	0.800	10/2	5.02	-0.59	294.7	2.4E+06	0.2869
224	10-2-52-500	0.805	10/2	10.29	-0.12	298.1	2.4E+06	0.3961
216	10-16-42-500	0.801	10/2	6.03	-0.01	303.1	2.5E+06	0.3208
216	10-17-12-500	0.808	10/2	4.04	-0.12	304.4	2.5E+06	0.2316
216	10-27-5-500	0.806	10/2	7.17	-0.47	307.6	2.5E+06	0.3778
216	10-27-8-500	0.806	10/2	8.10	-0.67	307.8	2.5E+06	0.4330
216	10-27-13-500	0.806	10/2	10.28	-0.36	307.4	2.5E+06	0.3816
216	10-27-18-000	0.794	10/2	12.15	-0.88	298.4	2.5E+06	0.1934
216	10-23-8-000	0.795	10/10	4.01	-0.21	297.0	2.5E+06	0.2962
216	10-28-48-500	0.805	10/10	4.06	-0.33	304.2	2.5E+06	0.3188
216	10-30-38-500	0.793	10/11	5.05	-0.50	295.7	2.4E+06	0.3418
216	10-29-6-000	0.803	10/11	6.26	-0.50	302.9	2.5E+06	0.4874
216	10-29-11-000	0.795	10/11	7.98	-0.10	296.7	2.4E+06	0.5321
204	9-13-37-500	0.797	10/10	7.25	0.19	277.2	2.3E+06	0.5409
204	9-13-41-500	0.794	10/10	8.13	-0.10	276.5	2.3E+06	0.6455
204	9-13-34-500	0.796	10/10	6.19	-0.56	275.6	2.3E+06	0.4409
204	9-13-48-500	0.788	10/10	9.09	-0.04	277.2	2.3E+06	0.7290
204	9-13-51-500	0.789	10/10	10.08	0.80	281.5	2.3E+06	0.5351
201	8-31-7-500	0.814	10/10	4.04	-0.18	320.1	2.6E+06	0.3605
201	8-31-19-500	0.799	10/10	6.03	-0.04	306.9	2.5E+06	0.5275
201	8-31-27-000	0.800	10/10	6.99	0.28	307.5	2.5E+06	0.5905
201	8-31-42-000	0.810	10/10	8.08	0.34	321.9	2.6E+06	0.7250
201	8-31-47-000	0.809	10/10	9.21	0.11	324.0	2.6E+06	0.7585
214	9-0-54-000	0.794	0/11	4.01	-0.53	295.6	2.4E+06	0.3069
214	9-0-57-000	0.791	0/11	5.26	-0.44	292.9	2.4E+06	0.0833
214	9-1-13-500	0.800	0/11	7.09	-0.24	290.0	2.4E+06	0.7447
214	9-4-1-000	0.808	0/10	6.05	-0.07	297.8	2.4E+06	0.4134
214	9-4-8-500	0.819	0/11	7.18	-0.21	305.6	2.5E+06	0.5709
214	9-4-16-500	0.813	0/10	7.96	0.02	301.2	2.4E+06	0.6279
216	10-58-39-500	0.806	10/19	3.04	-0.56	305.3	2.5E+06	0.4224
216	10-58-52-500	0.811	10/19	8.22	-0.41	310.9	2.5E+06	0.7670
216	10-58-55-500	0.797	10/18	12.26	0.77	303.6	2.5E+06	0.4877
216	11-0-1-500	0.794	10/15	3.04	-0.15	295.3	2.4E+06	0.4146

Table E-1. Concluded.

Flight	Time	MINF	Camber	ALPT	BETA	QINF	RNPU	CNWP
216	11-1-53-000	0.805	10/13	2.99	-0.44	304.4	2.5E+06	0.3791
216	11-2-1-000	0.808	10/13	6.08	-0.38	307.6	2.5E+06	0.5571
216	11-2-6-000	0.803	10/12	9.94	0.02	303.7	2.5E+06	0.6162
216	11-3-30-000	0.796	10/12	3.02	-0.21	297.9	2.5E+06	0.3846
216	11-3-39-500	0.804	10/13	8.04	-0.33	304.8	2.5E+06	0.7229
216	11-3-40-500	0.802	10/12	9.90	-0.30	304.3	2.5E+06	0.6857
216	11-5-2-000	0.804	10/9	3.15	-0.12	304.3	2.5E+06	0.3412
216	11-5-11-500	0.803	10/10	5.96	-0.56	304.2	2.5E+06	0.5427
216	11-5-14-000	0.805	10/9	8.32	0.22	306.8	2.5E+06	0.7148
216	11-6-47-000	0.795	10/6	3.02	-0.65	296.8	2.4E+06	0.3546
216	11-6-59-500	0.804	10/6	5.94	-0.10	304.5	2.5E+06	0.5619
216	11-7-3-000	0.807	10/7	8.29	-0.47	309.3	2.5E+06	0.7265
216	11-8-20-000	0.802	10/4	3.09	-0.62	302.2	2.5E+06	0.3607
216	11-8-28-000	0.810	10/4	6.06	-0.44	308.6	2.5E+06	0.5489
216	11-8-31-000	0.809	10/4	8.00	-0.41	307.0	2.5E+06	0.7208
216	11-10-2-500	0.806	10/0	3.02	-0.24	306.1	2.5E+06	0.3578
216	11-10-12-000	0.806	10/0	5.83	-0.38	306.9	2.5E+06	0.5499
216	11-10-16-000	0.803	10/0	8.04	-0.30	306.7	2.5E+06	0.7191
192	11-25-33-000	0.797	5/15	7.00	-0.06	233.9	1.9E+06	0.5904
192	11-25-40-000	0.786	5/15	8.08	0.42	224.2	1.9E+06	0.6774
192	11-25-43-500	0.784	5/15	9.25	-0.08	225.1	1.9E+06	0.7521
192	11-25-56-500	0.795	5/14	11.50	0.86	260.8	2.2E+06	0.5738
204	9-15-28-000	0.790	5/15	3.97	-0.18	266.4	2.2E+06	0.4161
204	9-15-38-500	0.794	5/15	4.99	-0.56	267.9	2.2E+06	0.6139
204	9-15-47-500	0.796	5/15	6.01	-0.33	270.1	2.2E+06	0.4391
204	9-15-50-500	0.797	5/15	7.18	-0.15	272.2	2.2E+06	0.7512
204	9-15-53-000	0.795	5/15	7.93	-0.24	271.9	2.2E+06	0.6265

Table E-2. Listing of data.

Flight 216, Wing sweep = 26°, Time = 10-34-46-000, MINF = 0.805, Camber = 0/2, ALPT = 4.96, BETA = -0.07, QINF = 304.9, RNPU = 2.5E+06, CNWP = 0.2281

η = 0.93		0.76		0.59		0.40	
			Upper Surface				
x/c	CP	*x/c*	CP	*x/c*	CP	*x/c*	CP
0.020	-0.297	0.000	0.856	0.000	0.434**	0.010	-0.845
0.060	-0.294	0.020	-0.770	0.020	-0.829	0.020	-1.071
0.110	-0.304	0.040	-0.353	0.060	-0.281**	0.060	-0.999
0.200	-0.240	0.060	-0.553	0.090	-0.828	0.110	-0.932
0.230	-0.284	0.090	-0.504	0.110	-0.872	0.140	-0.925
0.400	-0.229	0.130	-0.439	0.130	-2.205**	0.190	-2.205**
0.490	-0.201	0.150	-0.457	0.150	-0.428	0.250	-0.375
0.590	-0.249	0.200	-0.422	0.210	-0.510	0.400	-0.386
0.630	-0.252	0.250	-0.416	0.250	-0.431	0.490	-0.344
0.700	-0.211	0.260	-0.350	0.340	-0.391	0.580	-0.353
0.750	-0.252	0.280	-0.375	0.370	-0.387	0.650	-0.397
0.810	-0.237	0.290	-0.367	0.400	-0.379	0.700	-0.382
0.840	-0.223	0.310	-0.352	0.410	-3.184**	0.750	-0.410
0.900	-0.133	0.320	-0.348	0.430	-0.378	0.800	-0.383
0.960	-0.026	0.340	-0.332	0.440	-0.347	0.830	-0.320
		0.350	-0.206**	0.460	-0.353	0.900	-0.180
		0.370	-0.312	0.490	-0.290	0.960	-0.018
		0.380	-0.351	0.500	-0.352		
		0.400	-0.285	0.520	-0.330		
		0.410	-0.338	0.540	-0.336		
		0.430	-0.310	0.550	-0.326		
		0.440	-0.257	0.580	-0.330		
		0.460	-0.324	0.600	-0.336		
		0.470	-0.315	0.610	-0.337		
		0.490	-0.309	0.650	-0.649		
		0.500	-0.326	0.700	-0.399		
		0.520	-0.300	0.750	-0.431		
		0.530	-0.302	0.820	-0.343		
		0.550	-0.343	0.890	-0.128		
		0.560	-0.306	0.900	-0.089		
		0.580	-0.301	0.960	0.041		
		0.590	-0.338				
		0.600	-0.340				
		0.640	-0.372				
		0.700	-0.341				
		0.750	-0.033**				
		0.820	-0.275				
		0.870	-0.233				
		0.930	-0.103				
		0.960	-0.031				
			Lower Surface				
0.020	-0.248	0.020	-0.069	0.020	0.051	0.020	0.395
0.110	-0.209	0.060	-0.017	0.060	0.074	0.060	-0.032
0.230	-0.077	0.090	-0.079	0.090	-0.011	0.110	-0.011
0.400	-0.075	0.120	-0.121	0.120	-0.334	0.250	-0.221
0.490	-0.060	0.200	-0.106	0.200	-0.157	0.400	-0.215
0.630	4.018**	0.260	-0.205	0.250	-0.179	0.490	-0.255
0.750	0.016	0.400	-0.139	0.400	-0.171	0.580	-0.273
0.850	0.089	0.490	-0.158	0.490	-0.059	0.650	-0.133
0.900	0.169	0.580	-0.153	0.580	-0.196	0.750	0.123
0.960	0.146	0.640	0.027	0.650	-0.045	0.830	0.265
		0.750	0.171	0.750	-0.037	0.900	0.312
		0.870	0.208	0.890	0.289	0.960	0.250
		0.930	0.215	0.930	0.247		
		0.960	0.173	0.960	0.368		
CN =	0.185		0.308		0.330		0.391

Table E-2. Continued.

Flight 216, Wing sweep = 26°, Time = 10-35-11-500, MINF = 0.801, Camber = 0/2, ALPT = 6.11, BETA = -0.67, QINF = 302.0, RNPU = 2.5E+06, CNWP = 0.2931

η = 0.93		0.76		0.59		0.40	
			Upper Surface				
x/c	CP	*x/c*	CP	*x/c*	CP	*x/c*	CP
0.020	-0.828	0.000	0.783	0.000	0.371**	0.010	-1.183
0.060	-0.370	0.020	-1.096	0.020	-1.017	0.020	-1.182
0.110	-0.328	0.040	-0.783	0.060	-0.406**	0.060	-1.158
0.200	-0.278	0.060	-0.956	0.090	-1.016	0.110	-1.056
0.230	-0.358	0.090	-0.923	0.110	-1.078	0.140	-1.074
0.400	-0.244	0.130	-0.934	0.130	-2.224**	0.190	-2.224**
0.490	-0.220	0.150	-0.890	0.150	-0.939	0.250	-0.459
0.590	-0.268	0.200	-0.334	0.210	-0.922	0.400	-0.367
0.630	-0.264	0.250	-0.365	0.250	-0.317	0.490	-0.346
0.700	-0.226	0.260	-0.331	0.340	-0.348	0.580	-0.339
0.750	-0.269	0.280	-0.368	0.370	-0.381	0.650	-0.389
0.810	-0.259	0.290	-0.364	0.400	-0.359	0.700	-0.368
0.840	-0.253	0.310	-0.353	0.410	-3.213**	0.750	-0.398
0.900	-0.152	0.320	-0.363	0.430	-0.372	0.800	-0.365
0.960	-0.046	0.340	-0.340	0.440	-0.348	0.830	-0.312
		0.350	-0.212**	0.460	-0.360	0.900	-0.163
		0.370	-0.328	0.490	-0.298	0.960	-0.002
		0.380	-0.362	0.500	-0.363		
		0.400	-0.286	0.520	-0.331		
		0.410	-0.355	0.540	-0.337		
		0.430	-0.314	0.550	-0.333		
		0.440	-0.274	0.580	-0.357		
		0.460	-0.337	0.600	-0.350		
		0.470	-0.329	0.610	-0.352		
		0.490	-0.326	0.650	-0.662		
		0.500	-0.355	0.700	-0.387		
		0.520	-0.340	0.750	-0.441		
		0.530	-0.317	0.820	-0.348		
		0.550	-0.354	0.890	-0.132		
		0.560	-0.344	0.900	-0.094		
		0.580	-0.315	0.960	0.040		
		0.590	-0.352				
		0.600	-0.356				
		0.640	-0.387				
		0.700	-0.357				
		0.750	-0.028**				
		0.820	-0.288				
		0.870	-0.237				
		0.930	-0.106				
		0.960	-0.037				
			Lower Surface				
0.020	-0.013	0.020	0.099	0.020	0.192	0.020	0.484
0.110	-0.144	0.060	0.089	0.060	0.168	0.060	-0.026
0.230	-0.032	0.090	0.008	0.090	0.065	0.110	0.091
0.400	-0.060	0.120	-0.041	0.120	-0.259	0.250	-0.156
0.490	-0.044	0.200	-0.048	0.200	-0.063	0.400	-0.165
0.630	4.058**	0.260	-0.147	0.250	-0.121	0.490	-0.211
0.750	0.014	0.400	-0.112	0.400	-0.131	0.580	-0.239
0.850	0.080	0.490	-0.131	0.490	-0.051	0.650	-0.110
0.900	0.176	0.580	-0.129	0.580	-0.160	0.750	0.126
0.960	0.137	0.640	0.044	0.650	-0.040	0.830	0.274
		0.750	0.179	0.750	-0.036	0.900	0.323
		0.870	0.235	0.890	0.293	0.960	0.254
		0.930	0.219	0.930	0.251		
		0.960	0.172	0.960	0.358		
CN =	0.234		0.416		0.418		0.455

Table E-2. Continued.

Flight 216, Wing sweep = 26°, Time = 10-35-16-500, MINF = 0.800, Camber = 0/2, ALPT = 7.12, BETA = -0.53, QINF = 299.9, RNPU = 2.5E+06, CNWP = 0.3013

η = 0.93		0.76		0.59		0.40	
			Upper Surface				
x/c	CP	*x/c*	CP	*x/c*	CP	*x/c*	CP
0.020	-1.039	0.000	0.682	0.000	0.311**	0.010	-1.323
0.060	-0.999	0.020	-1.261	0.020	-1.150	0.020	-1.364
0.110	-0.901	0.040	-0.989	0.060	-0.532**	0.060	-1.298
0.200	-0.248	0.060	-1.139	0.090	-1.191	0.110	-1.207
0.230	-0.348	0.090	-1.116	0.110	-1.219	0.140	-1.230
0.400	-0.275	0.130	-1.116	0.130	-2.231**	0.190	-2.231**
0.490	-0.249	0.150	-1.100	0.150	-1.129	0.250	-1.158
0.590	-0.277	0.200	-1.012	0.210	-1.087	0.400	-0.362
0.630	-0.291	0.250	-1.034	0.250	-1.086	0.490	-0.326
0.700	-0.242	0.260	-0.552	0.340	-0.387	0.580	-0.327
0.750	-0.304	0.280	-0.412	0.370	-0.319	0.650	-0.367
0.810	-0.295	0.290	-0.301	0.400	-0.272	0.700	-0.361
0.840	-0.268	0.310	-0.257	0.410	-3.227**	0.750	-0.367
0.900	-0.197	0.320	-0.243	0.430	-0.261	0.800	-0.339
0.960	-0.073	0.340	-0.219	0.440	-0.264	0.830	-0.269
		0.350	-0.161**	0.460	-0.271	0.900	-0.119
		0.370	-0.223	0.490	-0.246	0.960	-0.016
		0.380	-0.269	0.500	-0.316		
		0.400	-0.229	0.520	-0.291		
		0.410	-0.290	0.540	-0.312		
		0.430	-0.244	0.550	-0.311		
		0.440	-0.226	0.580	-0.340		
		0.460	-0.304	0.600	-0.307		
		0.470	-0.305	0.610	-0.333		
		0.490	-0.303	0.650	-0.643		
		0.500	-0.320	0.700	-0.348		
		0.520	-0.309	0.750	-0.435		
		0.530	-0.304	0.820	-0.340		
		0.550	-0.344	0.890	-0.124		
		0.560	-0.340	0.900	-0.106		
		0.580	-0.295	0.960	0.023		
		0.590	-0.357				
		0.600	-0.360				
		0.640	-0.386				
		0.700	-0.366				
		0.750	-0.023**				
		0.820	-0.288				
		0.870	-0.255				
		0.930	-0.120				
		0.960	-0.051				
			Lower Surface				
0.020	0.072	0.020	0.223	0.020	0.281	0.020	0.564
0.110	-0.104	0.060	0.163	0.060	0.242	0.060	-0.036
0.230	-0.023	0.090	0.072	0.090	0.129	0.110	0.157
0.400	-0.062	0.120	-0.004	0.120	-0.199	0.250	-0.111
0.490	-0.043	0.200	-0.014	0.200	-0.030	0.400	-0.129
0.630	4.096**	0.260	-0.097	0.250	-0.070	0.490	-0.189
0.750	-0.008	0.400	-0.089	0.400	-0.099	0.580	-0.212
0.850	0.070	0.490	-0.115	0.490	-0.050	0.650	-0.102
0.900	0.149	0.580	-0.106	0.580	-0.149	0.750	0.145
0.960	0.107	0.640	0.046	0.650	-0.050	0.830	0.270
		0.750	0.170	0.750	-0.042	0.900	0.313
		0.870	0.240	0.890	0.282	0.960	0.238
		0.930	0.207	0.930	0.243		
		0.960	0.160	0.960	0.338		
CN =	0.325		0.511		0.509		0.585

Table E-2. Continued.

Flight 216, Wing sweep = 26°, Time = 10-35-20-000, MINF = 0.802, Camber = 0/2, ALPT = 7.97, BETA = -0.18, QINF = 299.8, RNPU = 2.5E+06, CNWP = 0.3300

η = 0.93		0.76		0.59		0.40	
			Upper Surface				
x/c	CP	*x/c*	CP	*x/c*	CP	*x/c*	CP
0.020	-1.135	0.000	0.644	0.000	0.286**	0.010	-1.352
0.060	-1.126	0.020	-1.409	0.020	-1.238	0.020	-1.403
0.110	-1.051	0.040	-1.081	0.060	-0.477**	0.060	-1.379
0.200	-0.400	0.060	-1.239	0.090	-1.240	0.110	-1.336
0.230	-0.214	0.090	-1.188	0.110	-1.324	0.140	-1.331
0.400	-0.251	0.130	-1.184	0.130	-2.223**	0.190	-2.223**
0.490	-0.233	0.150	-1.178	0.150	-1.173	0.250	-1.292
0.590	-0.283	0.200	-1.102	0.210	-1.181	0.400	-0.492
0.630	-0.305	0.250	-1.163	0.250	-1.179	0.490	-0.321
0.700	-0.248	0.260	-1.098	0.340	-0.740	0.580	-0.304
0.750	-0.300	0.280	-1.138	0.370	-0.616	0.650	-0.323
0.810	-0.293	0.290	-1.129	0.400	-0.522	0.700	-0.332
0.840	-0.282	0.310	-0.930	0.410	-3.220**	0.750	-0.325
0.900	-0.206	0.320	-0.725	0.430	-0.448	0.800	-0.295
0.960	-0.092	0.340	-0.496	0.440	-0.364	0.830	-0.215
		0.350	-0.259**	0.460	-0.346	0.900	-0.101
		0.370	-0.372	0.490	-0.215	0.960	-0.023
		0.380	-0.356	0.500	-0.273		
		0.400	-0.238	0.520	-0.249		
		0.410	-0.231	0.540	-0.241		
		0.430	-0.189	0.550	-0.238		
		0.440	-0.131	0.580	-0.246		
		0.460	-0.185	0.600	-0.238		
		0.470	-0.191	0.610	-0.242		
		0.490	-0.200	0.650	-0.553		
		0.500	-0.220	0.700	-0.303		
		0.520	-0.216	0.750	-0.368		
		0.530	-0.216	0.820	-0.297		
		0.550	-0.239	0.890	-0.103		
		0.560	-0.261	0.900	-0.077		
		0.580	-0.240	0.960	0.043		
		0.590	-0.293				
		0.600	-0.287				
		0.640	-0.320				
		0.700	-0.313				
		0.750	-0.029**				
		0.820	-0.283				
		0.870	-0.232				
		0.930	-0.104				
		0.960	-0.035				
			Lower Surface				
0.020	0.096	0.020	0.320	0.020	0.383	0.020	0.664
0.110	-0.061	0.060	0.235	0.060	0.292	0.060	-0.013
0.230	0.009	0.090	0.137	0.090	0.184	0.110	0.231
0.400	-0.039	0.120	0.060	0.120	-0.132	0.250	-0.048
0.490	-0.041	0.200	0.039	0.200	0.013	0.400	-0.083
0.630	4.107**	0.260	-0.059	0.250	-0.024	0.490	-0.143
0.750	0.008	0.400	-0.054	0.400	-0.065	0.580	-0.193
0.850	0.060	0.490	-0.088	0.490	-0.026	0.650	-0.079
0.900	0.142	0.580	-0.101	0.580	-0.121	0.750	0.139
0.960	0.110	0.640	0.058	0.650	-0.026	0.830	0.275
		0.750	0.166	0.750	-0.019	0.900	0.331
		0.870	0.227	0.890	0.284	0.960	0.250
		0.930	0.213	0.930	0.255		
		0.960	0.169	0.960	0.362		
CN =	0.352		0.589		0.573		0.657

Table E-2. Continued.

Flight 216, Wing sweep = 26°, Time = 10-35-23-500, MINF = 0.801, Camber = 0/2, ALPT = 10.12, BETA = -0.47, QINF = 298.1, RNPU = 2.4E+06, CNWP = 0.4449

η = 0.93		0.76		0.59		0.40	
			Upper Surface				
x/c	CP	*x/c*	CP	*x/c*	CP	*x/c*	CP
0.020	-1.388	0.000	0.445	0.000	0.058**	0.010	-1.592
0.060	-1.349	0.020	-1.674	0.020	-1.452	0.020	-1.590
0.110	-1.314	0.040	-1.255	0.060	-0.721**	0.060	-1.609
0.200	-0.900	0.060	-1.455	0.090	-1.479	0.110	-1.497
0.230	-0.707	0.090	-1.402	0.110	-1.511	0.140	-1.544
0.400	-0.281	0.130	-1.391	0.130	-2.226**	0.190	-2.226**
0.490	-0.265	0.150	-1.379	0.150	-1.356	0.250	-1.476
0.590	-0.310	0.200	-1.315	0.210	-0.944	0.400	-0.780
0.630	-0.317	0.250	-1.147	0.250	-0.805	0.490	-0.370
0.700	-0.270	0.260	-1.027	0.340	-0.749	0.580	-0.243
0.750	-0.319	0.280	-0.959	0.370	-0.729	0.650	-0.244
0.810	-0.321	0.290	-0.867	0.400	-0.708	0.700	-0.236
0.840	-0.326	0.310	-0.774	0.410	-3.228**	0.750	-0.236
0.900	-0.235	0.320	-0.755	0.430	-0.682	0.800	-0.272
0.960	-0.140	0.340	-0.674	0.440	-0.642	0.830	-0.197
		0.350	-0.304**	0.460	-0.644	0.900	-0.137
		0.370	-0.533	0.490	-0.593	0.960	-0.072
		0.380	-0.547	0.500	-0.633		
		0.400	-0.439	0.520	-0.613		
		0.410	-0.436	0.540	-0.602		
		0.430	-0.389	0.550	-0.588		
		0.440	-0.315	0.580	-0.572		
		0.460	-0.374	0.600	-0.544		
		0.470	-0.377	0.610	-0.545		
		0.490	-0.335	0.650	-0.749		
		0.500	-0.337	0.700	-0.505		
		0.520	-0.309	0.750	-0.515		
		0.530	-0.297	0.820	-0.351		
		0.550	-0.340	0.890	-0.227		
		0.560	-0.315	0.900	-0.206		
		0.580	-0.298	0.960	-0.176		
		0.590	-0.316				
		0.600	-0.314				
		0.640	-0.328				
		0.700	-0.335				
		0.750	-0.004**				
		0.820	-0.226				
		0.870	-0.216				
		0.930	-0.165				
		0.960	-0.143				
			Lower Surface				
0.020	0.230	0.020	0.466	0.020	0.528	0.020	0.748
0.110	0.002	0.060	0.341	0.060	0.450	0.060	0.001
0.230	0.030	0.090	0.241	0.090	0.304	0.110	0.344
0.400	-0.040	0.120	0.148	0.120	-0.029	0.250	0.035
0.490	-0.035	0.200	0.115	0.200	0.106	0.400	-0.015
0.630	4.140**	0.260	0.002	0.250	0.059	0.490	-0.081
0.750	-0.016	0.400	-0.014	0.400	-0.016	0.580	-0.139
0.850	0.028	0.490	-0.067	0.490	-0.016	0.650	-0.069
0.900	0.121	0.580	-0.096	0.580	-0.097	0.750	0.145
0.960	0.079	0.640	0.046	0.650	-0.016	0.830	0.275
		0.750	0.151	0.750	-0.009	0.900	0.306
		0.870	0.178	0.890	0.256	0.960	0.205
		0.930	0.165	0.930	0.192		
		0.960	0.092	0.960	0.249		
CN =	0.480		0.687		0.734		0.781

Table E-2. Continued.

Flight 216, Wing sweep = 26°, Time = 10-36-34-000, MINF = 0.800, Camber = 0/2, ALPT = 7.98, BETA = -0.15, QINF = 296.7, RNPU = 2.4E+06, CNWP = 0.3491

η = 0.93		0.76		0.59		0.40	
			Upper Surface				
x/c	CP	*x/c*	CP	*x/c*	CP	*x/c*	CP
0.020	-1.165	0.000	0.624	0.000	0.271**	0.010	-1.395
0.060	-1.117	0.020	-1.388	0.020	-1.253	0.020	-1.436
0.110	-1.045	0.040	-1.092	0.060	-0.484**	0.060	-1.411
0.200	-0.384	0.060	-1.255	0.090	-1.271	0.110	-1.333
0.230	-0.365	0.090	-1.195	0.110	-1.316	0.140	-1.363
0.400	-0.264	0.130	-1.208	0.130	-2.234**	0.190	-2.234**
0.490	-0.257	0.150	-1.185	0.150	-1.203	0.250	-1.323
0.590	-0.297	0.200	-1.110	0.210	-1.202	0.400	-0.487
0.630	-0.304	0.250	-1.173	0.250	-1.202	0.490	-0.333
0.700	-0.264	0.260	-1.114	0.340	-0.704	0.580	-0.319
0.750	-0.317	0.280	-1.159	0.370	-0.610	0.650	-0.319
0.810	-0.292	0.290	-1.150	0.400	-0.530	0.700	-0.328
0.840	-0.295	0.310	-0.744	0.410	-3.241**	0.750	-0.331
0.900	-0.223	0.320	-0.625	0.430	-0.440	0.800	-0.294
0.960	-0.096	0.340	-0.498	0.440	-0.391	0.830	-0.226
		0.350	-0.269**	0.460	-0.335	0.900	-0.115
		0.370	-0.345	0.490	-0.281	0.960	-0.022
		0.380	-0.350	0.500	-0.275		
		0.400	-0.236	0.520	-0.237		
		0.410	-0.238	0.540	-0.247		
		0.430	-0.185	0.550	-0.246		
		0.440	-0.141	0.580	-0.213		
		0.460	-0.211	0.600	-0.232		
		0.470	-0.204	0.610	-0.249		
		0.490	-0.220	0.650	-0.581		
		0.500	-0.240	0.700	-0.324		
		0.520	-0.236	0.750	-0.389		
		0.530	-0.240	0.820	-0.299		
		0.550	-0.272	0.890	-0.103		
		0.560	-0.275	0.900	-0.090		
		0.580	-0.245	0.960	0.033		
		0.590	-0.301				
		0.600	-0.318				
		0.640	-0.323				
		0.700	-0.334				
		0.750	-0.028**				
		0.820	-0.289				
		0.870	-0.248				
		0.930	-0.119				
		0.960	-0.034				
			Lower Surface				
0.020	0.089	0.020	0.302	0.020	0.384	0.020	0.653
0.110	-0.073	0.060	0.224	0.060	0.304	0.060	-0.031
0.230	-0.006	0.090	0.132	0.090	0.203	0.110	0.215
0.400	-0.046	0.120	0.047	0.120	-0.152	0.250	-0.059
0.490	-0.037	0.200	0.029	0.200	0.024	0.400	-0.080
0.630	4.161**	0.260	-0.062	0.250	-0.035	0.490	-0.151
0.750	-0.002	0.400	-0.065	0.400	-0.059	0.580	-0.173
0.850	0.046	0.490	-0.099	0.490	-0.044	0.650	-0.075
0.900	0.141	0.580	-0.112	0.580	-0.133	0.750	0.152
0.960	0.097	0.640	0.063	0.650	-0.044	0.830	0.283
		0.750	0.169	0.750	-0.022	0.900	0.316
		0.870	0.212	0.890	0.299	0.960	0.249
		0.930	0.216	0.930	0.255		
		0.960	0.157	0.960	0.344		
CN =	0.367		0.588		0.582		0.667

Table E-2. Continued.

Flight 216, Wing sweep = 26°, Time = 10-36-38-500, MINF = 0.802, Camber = 0/2, ALPT = 9.01, BETA = 0.43, QINF = 297.4, RNPU = 2.4E+06, CNWP = 0.4157

η = 0.93		0.76		0.59		0.40	
			Upper Surface				
x/c	CP	*x/c*	CP	*x/c*	CP	*x/c*	CP
0.020	-1.275	0.000	0.558	0.000	0.174**	0.010	-1.474
0.060	-1.205	0.020	-1.548	0.020	-1.364	0.020	-1.493
0.110	-1.205	0.040	-1.222	0.060	-0.594**	0.060	-1.490
0.200	-0.958	0.060	-1.354	0.090	-1.371	0.110	-1.416
0.230	-0.844	0.090	-1.297	0.110	-1.403	0.140	-1.445
0.400	-0.233	0.130	-1.294	0.130	-2.221**	0.190	-2.221**
0.490	-0.226	0.150	-1.285	0.150	-1.312	0.250	-1.397
0.590	-0.285	0.200	-1.231	0.210	-1.297	0.400	-0.765
0.630	-0.300	0.250	-1.295	0.250	-1.285	0.490	-0.442
0.700	-0.249	0.260	-1.211	0.340	-0.824	0.580	-0.290
0.750	-0.297	0.280	-1.265	0.370	-0.720	0.650	-0.259
0.810	-0.290	0.290	-1.256	0.400	-0.677	0.700	-0.262
0.840	-0.294	0.310	-1.206	0.410	-3.225**	0.750	-0.241
0.900	-0.233	0.320	-1.208	0.430	-0.673	0.800	-0.221
0.960	-0.124	0.340	-0.776	0.440	-0.622	0.830	-0.166
		0.350	-0.358**	0.460	-0.622	0.900	-0.079
		0.370	-0.617	0.490	-0.546	0.960	-0.003
		0.380	-0.655	0.500	-0.592		
		0.400	-0.566	0.520	-0.568		
		0.410	-0.588	0.540	-0.539		
		0.430	-0.523	0.550	-0.507		
		0.440	-0.457	0.580	-0.455		
		0.460	-0.475	0.600	-0.441		
		0.470	-0.416	0.610	-0.402		
		0.490	-0.393	0.650	-0.540		
		0.500	-0.359	0.700	-0.292		
		0.520	-0.314	0.750	-0.332		
		0.530	-0.274	0.820	-0.169		
		0.550	-0.300	0.890	-0.071		
		0.560	-0.251	0.900	-0.062		
		0.580	-0.230	0.960	0.028		
		0.590	-0.246				
		0.600	-0.245				
		0.640	-0.217				
		0.700	-0.229				
		0.750	-0.005**				
		0.820	-0.205				
		0.870	-0.177				
		0.930	-0.077				
		0.960	-0.019				
			Lower Surface				
0.020	0.174	0.020	0.413	0.020	0.485	0.020	0.732
0.110	-0.016	0.060	0.303	0.060	0.380	0.060	-0.008
0.230	0.025	0.090	0.202	0.090	0.272	0.110	0.299
0.400	-0.034	0.120	0.114	0.120	-0.068	0.250	-0.003
0.490	-0.029	0.200	0.081	0.200	0.074	0.400	-0.035
0.630	4.159**	0.260	-0.021	0.250	0.025	0.490	-0.101
0.750	-0.002	0.400	-0.027	0.400	-0.021	0.580	-0.155
0.850	0.046	0.490	-0.076	0.490	-0.021	0.650	-0.067
0.900	0.133	0.580	-0.101	0.580	-0.110	0.750	0.160
0.960	0.095	0.640	0.056	0.650	-0.014	0.830	0.297
		0.750	0.171	0.750	-0.014	0.900	0.329
		0.870	0.206	0.890	0.284	0.960	0.239
		0.930	0.208	0.930	0.233		
		0.960	0.150	0.960	0.322		
CN =	0.472		0.678		0.687		0.743

Table E-2. Continued.

Flight 216, Wing sweep = 26°, Time = 10-36-44-000, MINF = 0.812, Camber = 0/2, ALPT = 10.15, BETA = -0.76, QINF = 305.2, RNPU = 2.5E+06, CNWP = 0.4726

η = 0.93		0.76		0.59		0.40	
			Upper Surface				
x/c	CP	*x/c*	CP	*x/c*	CP	*x/c*	CP
0.020	-1.341	0.000	0.462	0.000	0.096**	0.010	-1.543
0.060	-1.308	0.020	-1.569	0.020	-1.412	0.020	-1.562
0.110	-1.202	0.040	-1.178	0.060	-0.606**	0.060	-1.560
0.200	-0.988	0.060	-1.400	0.090	-1.433	0.110	-1.490
0.230	-0.736	0.090	-1.361	0.110	-1.476	0.140	-1.500
0.400	-0.276	0.130	-1.355	0.130	-2.168**	0.190	-2.168**
0.490	-0.268	0.150	-1.316	0.150	-1.358	0.250	-1.465
0.590	-0.319	0.200	-1.182	0.210	-1.342	0.400	-0.846
0.630	-0.330	0.250	-0.930	0.250	-0.817	0.490	-0.509
0.700	-0.284	0.260	-0.832	0.340	-0.770	0.580	-0.308
0.750	-0.339	0.280	-0.809	0.370	-0.752	0.650	-0.257
0.810	-0.315	0.290	-0.762	0.400	-0.715	0.700	-0.245
0.840	-0.313	0.310	-0.753	0.410	-3.147**	0.750	-0.239
0.900	-0.246	0.320	-0.746	0.430	-0.697	0.800	-0.261
0.960	-0.132	0.340	-0.700	0.440	-0.671	0.830	-0.206
		0.350	-0.343**	0.460	-0.665	0.900	-0.134
		0.370	-0.656	0.490	-0.611	0.960	-0.079
		0.380	-0.705	0.500	-0.664		
		0.400	-0.535	0.520	-0.641		
		0.410	-0.565	0.540	-0.637		
		0.430	-0.594	0.550	-0.607		
		0.440	-0.492	0.580	-0.585		
		0.460	-0.573	0.600	-0.553		
		0.470	-0.505	0.610	-0.555		
		0.490	-0.445	0.650	-0.773		
		0.500	-0.488	0.700	-0.513		
		0.520	-0.402	0.750	-0.563		
		0.530	-0.418	0.820	-0.401		
		0.550	-0.421	0.890	-0.274		
		0.560	-0.383	0.900	-0.262		
		0.580	-0.372	0.960	-0.192		
		0.590	-0.379				
		0.600	-0.359				
		0.640	-0.310				
		0.700	-0.318				
		0.750	-0.016**				
		0.820	-0.237				
		0.870	-0.209				
		0.930	-0.163				
		0.960	-0.130				
			Lower Surface				
0.020	0.216	0.020	0.463	0.020	0.522	0.020	0.740
0.110	-0.010	0.060	0.354	0.060	0.418	0.060	-0.012
0.230	0.031	0.090	0.229	0.090	0.297	0.110	0.347
0.400	-0.048	0.120	0.135	0.120	-0.020	0.250	0.031
0.490	-0.011	0.200	0.107	0.200	0.081	0.400	-0.024
0.630	4.049**	0.260	-0.015	0.250	0.049	0.490	-0.096
0.750	-0.021	0.400	-0.023	0.400	-0.015	0.580	-0.145
0.850	0.026	0.490	-0.074	0.490	-0.029	0.650	-0.069
0.900	0.120	0.580	-0.106	0.580	-0.111	0.750	0.152
0.960	0.076	0.640	0.036	0.650	-0.025	0.830	0.277
		0.750	0.146	0.750	-0.003	0.900	0.308
		0.870	0.179	0.890	0.245	0.960	0.205
		0.930	0.127	0.930	0.179		
		0.960	0.059	0.960	0.254		
CN =	0.481		0.677		0.762		0.797

Table E-2. Continued.

Flight 216, Wing sweep = 26°, Time = 10-36-47-500, MINF = 0.801, Camber = 0/2, ALPT = 12.10, BETA = 0.83, QINF = 298.6, RNPU = 2.4E+06, CNWP = 0.2710

η = 0.93		0.76		0.59		0.40	
			Upper Surface				
x/c	CP	*x/c*	CP	*x/c*	CP	*x/c*	CP
0.020	-1.541	0.000	0.284	0.000	-0.171**	0.010	-1.712
0.060	-1.516	0.020	-1.727	0.020	-0.772	0.020	-1.710
0.110	-1.457	0.040	-1.508	0.060	-0.151**	0.060	-1.630
0.200	-0.866	0.060	-1.596	0.090	-0.668	0.110	-1.335
0.230	-0.746	0.090	-1.556	0.110	-0.747	0.140	-1.202
0.400	-0.457	0.130	-1.532	0.130	-2.226**	0.190	-2.226**
0.490	-0.331	0.150	-1.517	0.150	-0.705	0.250	-1.148
0.590	-0.351	0.200	-1.456	0.210	-0.686	0.400	-0.853
0.630	-0.347	0.250	-1.074	0.250	-0.669	0.490	-0.552
0.700	-0.306	0.260	-0.962	0.340	-0.766	0.580	-0.470
0.750	-0.325	0.280	-0.958	0.370	-0.770	0.650	-0.435
0.810	-0.316	0.290	-0.862	0.400	-0.769	0.700	-0.431
0.840	-0.314	0.310	-0.823	0.410	-3.226**	0.750	-0.444
0.900	-0.243	0.320	-0.830	0.430	-0.774	0.800	-0.450
0.960	-0.165	0.340	-0.636	0.440	-0.747	0.830	-0.388
		0.350	-0.279**	0.460	-0.756	0.900	-0.354
		0.370	-0.495	0.490	-0.717	0.960	-0.318
		0.380	-0.454	0.500	-0.782		
		0.400	-0.302	0.520	-0.765		
		0.410	-0.379	0.540	-0.755		
		0.430	-0.360	0.550	-0.728		
		0.440	-0.286	0.580	-0.695		
		0.460	-0.379	0.600	-0.683		
		0.470	-0.330	0.610	-0.671		
		0.490	-0.361	0.650	-0.845		
		0.500	-0.355	0.700	-0.625		
		0.520	-0.350	0.750	-0.666		
		0.530	-0.355	0.820	-0.520		
		0.550	-0.394	0.890	-0.442		
		0.560	-0.351	0.900	-0.357		
		0.580	-0.328	0.960	-0.304		
		0.590	-0.378				
		0.600	-0.381				
		0.640	-0.346				
		0.700	-0.330				
		0.750	-0.033**				
		0.820	-0.221				
		0.870	-0.204				
		0.930	-0.231				
		0.960	-0.220				
			Lower Surface				
0.020	0.264	0.020	0.577	0.020	0.626	0.020	0.811
0.110	0.072	0.060	0.420	0.060	0.513	0.060	-0.021
0.230	0.061	0.090	0.310	0.090	0.384	0.110	0.427
0.400	-0.025	0.120	0.217	0.120	0.039	0.250	0.111
0.490	-0.013	0.200	0.166	0.200	0.175	0.400	0.018
0.630	4.130**	0.260	0.041	0.250	0.110	0.490	-0.062
0.750	-0.027	0.400	-0.002	0.400	0.006	0.580	-0.122
0.850	-0.002	0.490	-0.070	0.490	-0.038	0.650	-0.080
0.900	0.089	0.580	-0.114	0.580	-0.123	0.750	0.127
0.960	0.035	0.640	0.031	0.650	-0.034	0.830	0.248
		0.750	0.149	0.750	-0.027	0.900	0.263
		0.870	0.137	0.890	0.198	0.960	0.124
		0.930	0.088	0.930	0.115		
		0.960	0.022	0.960	0.167		
CN =	0.558		0.728		0.688		0.841

Table E-2. Continued.

Flight 216, Wing sweep = 26°, Time = 10-36-50-500, MINF = 0.790, Camber = 0/2, ALPT = 11.97, BETA = 0.25, QINF = 291.5, RNPU = 2.4E+06, CNWP = 0.2583

η = 0.93		0.76		0.59		0.40	
			Upper Surface				
x/c	CP	*x/c*	CP	*x/c*	CP	*x/c*	CP
0.020	-1.643	0.000	0.222	0.000	-0.146**	0.010	-1.774
0.060	-1.565	0.020	-1.801	0.020	-1.152	0.020	-1.772
0.110	-1.521	0.040	-1.387	0.060	-0.300**	0.060	-1.807
0.200	-0.841	0.060	-1.675	0.090	-0.966	0.110	-1.446
0.230	-0.640	0.090	-1.631	0.110	-1.017	0.140	-1.086
0.400	-0.399	0.130	-1.593	0.130	-2.287**	0.190	-2.287**
0.490	-0.332	0.150	-1.584	0.150	-1.034	0.250	-1.066
0.590	-0.325	0.200	-1.519	0.210	-1.044	0.400	-1.051
0.630	-0.344	0.250	-1.145	0.250	-0.969	0.490	-0.884
0.700	-0.283	0.260	-0.971	0.340	-0.917	0.580	-0.620
0.750	-0.282	0.280	-0.988	0.370	-0.903	0.650	-0.490
0.810	-0.295	0.290	-0.914	0.400	-0.842	0.700	-0.466
0.840	-0.291	0.310	-0.876	0.410	-3.312**	0.750	-0.425
0.900	-0.229	0.320	-0.865	0.430	-0.832	0.800	-0.454
0.960	-0.177	0.340	-0.762	0.440	-0.779	0.830	-0.372
		0.350	-0.350**	0.460	-0.773	0.900	-0.323
		0.370	-0.688	0.490	-0.680	0.960	-0.285
		0.380	-0.693	0.500	-0.726		
		0.400	-0.381	0.520	-0.708		
		0.410	-0.368	0.540	-0.683		
		0.430	-0.350	0.550	-0.650		
		0.440	-0.222	0.580	-0.596		
		0.460	-0.345	0.600	-0.568		
		0.470	-0.284	0.610	-0.535		
		0.490	-0.244	0.650	-0.665		
		0.500	-0.289	0.700	-0.403		
		0.520	-0.231	0.750	-0.455		
		0.530	-0.264	0.820	-0.301		
		0.550	-0.266	0.890	-0.223		
		0.560	-0.250	0.900	-0.222		
		0.580	-0.234	0.960	-0.177		
		0.590	-0.271				
		0.600	-0.282				
		0.640	-0.224				
		0.700	-0.229				
		0.750	-0.016**				
		0.820	-0.161				
		0.870	-0.157				
		0.930	-0.169				
		0.960	-0.146				
			Lower Surface				
0.020	0.341	0.020	0.605	0.020	0.648	0.020	0.812
0.110	0.079	0.060	0.449	0.060	0.503	0.060	0.001
0.230	0.077	0.090	0.319	0.090	0.395	0.110	0.444
0.400	-0.014	0.120	0.222	0.120	0.062	0.250	0.112
0.490	-0.021	0.200	0.188	0.200	0.194	0.400	0.056
0.630	4.221**	0.260	0.049	0.250	0.132	0.490	-0.026
0.750	-0.009	0.400	0.025	0.400	0.023	0.580	-0.113
0.850	0.009	0.490	-0.037	0.490	-0.028	0.650	-0.044
0.900	0.096	0.580	-0.082	0.580	-0.089	0.750	0.152
0.960	0.050	0.640	0.043	0.650	-0.013	0.830	0.257
		0.750	0.158	0.750	-0.005	0.900	0.286
		0.870	0.166	0.890	0.202	0.960	0.140
		0.930	0.135	0.930	0.140		
		0.960	0.079	0.960	0.223		
CN =	0.542		0.733		0.726		0.925

Table E-2. Continued.

Flight 216, Wing sweep = 26°, Time = 10-9-26-500, MINF = 0.792, Camber = 0/2, ALPT = 4.03, BETA = -0.12, QINF = 283.0, RNPU = 2.3E+06, CNWP = 0.1794

η = 0.93		0.76		0.59		0.40	
Upper Surface							
x/c	CP	*x/c*	CP	*x/c*	CP	*x/c*	CP
0.020	-0.098	0.000	0.846	0.000	0.746**	0.010	-1.018
0.060	-0.185	0.020	-0.385	0.020	-0.527	0.020	-0.974
0.110	-0.251	0.040	-0.234	0.060	-0.201**	0.060	-0.747
0.200	-0.209	0.060	-0.379	0.090	-0.415	0.110	-0.440
0.230	-0.244	0.090	-0.335	0.110	-0.441	0.140	-0.540
0.400	-0.204	0.130	-0.338	0.130	-2.278**	0.190	-2.278**
0.490	-0.190	0.150	-0.352	0.150	-0.423	0.250	-0.415
0.590	-0.232	0.200	-0.325	0 210	-0.442	0.400	-0.353
0.630	-0.244	0.250	-0.306	0.250	-0.368	0.490	-0.308
0.700	-0.228	0.260	-0.308	0.340	-0.339	0.580	-0.295
0.750	-0.224	0.280	-0.318	0.370	-0.364	0.650	-0.381
0.810	-0.221	0.290	-0.302	0.400	-0.312	0.700	-0.353
0.840	-0.221	0.310	-0.289	0.410	-3.334**	0.750	-0.369
0.900	-0.126	0.320	-0.315	0.430	-0.340	0.800	-0.366
0.960	-0.010	0.340	-0.297	0.440	-0.338	0.830	-0.322
		0.350	-0.213**	0.460	-0.325	0.900	-0.185
		0.370	-0.291	0.490	-0.293	0.960	-0.009
		0.380	-0.312	0.500	-0.311		
		0.400	-0.242	0.520	-0.334		
		0.410	-0.296	0.540	-0.300		
		0.430	-0.266	0.550	-0.309		
		0.440	-0.248	0.580	-0.296		
		0.460	-0.254	0.600	-0.321		
		0.470	-0.288	0.610	-0.331		
		0.490	-0.284	0.650	-0.483		
		0.500	-0.291	0.700	-0.381		
		0.520	-0.271	0.750	-0.387		
		0.530	-0.281	0.820	-0.335		
		0.550	-0.318	0.890	-0.135		
		0.560	-0.307	0.900	-0.099		
		0.580	-0.278	0.960	0.032		
		0.590	-0.328				
		0.600	-0.306				
		0.640	-0.349				
		0.700	-0.326				
		0.750	-0.028**				
		0.820	-0.274				
		0.870	-0.228				
		0.930	-0.104				
		0.960	-0.038				
Lower Surface							
0.020	-0.416	0.020	-0.316	0.020	-0.090	0.020	0.249
0.110	-0.256	0.060	-0.126	0.060	-0.028	0.060	-0.031
0.230	-0.128	0.090	-0.153	0.090	-0.097	0.110	-0.094
0.400	-0.125	0.120	-0.208	0.120	-0.348	0.250	-0.275
0.490	-0.077	0.200	-0.165	0.200	-0.209	0.400	-0.267
0.630	4.427**	0.260	-0.240	0.250	-0.236	0.490	-0.287
0.750	0.012	0.400	-0.178	0.400	-0.223	0.580	-0.291
0.850	0.071	0.490	-0.179	0.490	-0.072	0.650	-0.148
0.900	0.175	0.580	-0.177	0.580	-0.227	0.750	0.095
0.960	0.148	0.640	0.001	0.650	-0.056	0.830	0.236
		0.750	0.164	0.750	-0.037	0.900	0.292
		0.870	0.194	0.890	0.276	0.960	0.241
		0.930	0.196	0.930	0.230		
		0.960	0.158	0.960	0.273		
CN =	0.137		0.222		0.231		0.282

Table E-2. Continued.

Flight 224, Wing sweep = 26°, Time = 10-3-54-500, MINF = 0.802, Camber = 0/2, ALPT = 8.01, BETA = 0.11, QINF = 292.5, RNPU = 2.4E+06, CNWP = 0.3170

η = 0.93		0.76		0.59		0.40	
			Upper Surface				
x/c	CP	*x/c*	CP	*x/c*	CP	*x/c*	CP
0.020	-1.167	0.000	0.651	0.000	4.351**	0.010	-1.294
0.060	-1.139	0.020	-1.410	0.020	-1.225	0.020	-1.293
0.110	-1.141	0.040	-1.169	0.060	-5.239**	0.060	-1.333
0.200	-0.674	0.060	-1.212	0.090	-1.212	0.110	-1.259
0.230	-0.224	0.090	-1.167	0.110	-1.307	0.140	-1.223
0.400	-0.209	0.130	-1.158	0.130	-1.199	0.190	-2.223**
0.490	-0.248	0.150	-1.159	0.150	-1.181	0.250	-1.241
0.590	-0.280	0.200	-1.065	0.210	-1.158	0.400	-0.467
0.630	-0.271	0.250	-1.145	0.250	-1.110	0.490	-0.257
0.700	-0.243	0.260	-1.061	0.340	-0.863	0.580	-0.278
0.750	-0.303	0.280	-1.133	0.370	-0.612	0.650	-0.294
0.810	-0.295	0.290	-1.133	0.400	-0.524	0.700	-0.287
0.840	-0.240	0.310	-1.101	0.410	-3.244**	0.750	-0.278
0.900	-0.182	0.320	-1.066	0.430	-0.464	0.800	-0.300
0.960	-0.086	0.340	-0.541	0.440	-0.404	0.830	-0.222
		0.350	-0.298**	0.460	-0.365	0.900	-0.105
		0.370	-0.363	0.490	-0.210	0.960	-0.010
		0.380	-0.370	0.500	-0.291		
		0.400	-0.192	0.520	-0.234		
		0.410	-0.238	0.540	-0.196		
		0.430	-0.175	0.550	-0.174		
		0.440	-0.122	0.580	-0.167		
		0.460	-0.179	0.600	-0.187		
		0.470	-0.134	0.610	-0.212		
		0.490	-0.149	0.650	2.946**		
		0.500	-0.169	0.700	-0.296		
		0.520	-0.210	0.750	-0.352		
		0.530	-0.194	0.820	-0.264		
		0.550	-0.250	0.890	-0.086		
		0.560	-0.236	0.900	-0.051		
		0.580	-0.232	0.960	0.042		
		0.590	-0.260				
		0.600	-0.284				
		0.640	-0.285				
		0.700	-0.296				
		0.750	-0.019**				
		0.820	-0.238				
		0.870	-0.205				
		0.930	-0.092				
		0.960	-0.029				
			Lower Surface				
0.020	0.167	0.020	0.338	0.020	0.451	0.020	0.695
0.110	-0.055	0.060	0.236	0.060	0.356	0.060	2.649**
0.230	0.008	0.090	0.141	0.090	1.932**	0.110	0.196
0.400	0.020	0.120	0.098	0.120	-0.123	0.250	-0.027
0.490	0.006	0.200	0.031	0.200	-0.005	0.400	-0.068
0.630	2.710**	0.260	-0.050	0.250	0.007	0.490	-0.136
0.750	0.015	0.400	-0.060	0.400	-0.067	0.580	-0.193
0.850	0.096	0.490	-0.099	0.490	-0.002	0.650	-0.062
0.900	0.167	0.580	-0.096	0.580	-0.092	0.750	0.137
0.960	0.122	0.640	0.078	0.650	-0.040	0.830	0.335
		0.750	0.215	0.750	-0.009	0.900	0.352
		0.870	0.266	0.890	0.279	0.960	0.260
		0.930	0.202	0.930	0.249		
		0.960	0.168	0.960	-3.333**		
CN =	0.392		0.592		0.549		0.637

Table E-2. Continued.

Flight 224, Wing sweep = 26°, Time = 10-4-3-000, MINF = 0.807, Camber = 0/2, ALPT = 10.17, BETA = 0.19, QINF = 298.9, RNPU = 2.4E+06, CNWP = 0.4287

η = 0.93		0.76		0.59		0.40	
			Upper Surface				
x/c	CP	*x/c*	CP	*x/c*	CP	*x/c*	CP
0.020	-1.350	0.000	0.487	0.000	4.236**	0.010	-1.488
0.060	-1.342	0.020	-1.580	0.020	-1.406	0.020	-1.487
0.110	-1.281	0.040	-1.394	0.060	-5.147**	0.060	-1.526
0.200	-1.018	0.060	-1.364	0.090	-1.376	0.110	-1.439
0.230	-0.859	0.090	-1.335	0.110	-1.469	0.140	-1.438
0.400	-0.233	0.130	-1.331	0.130	-1.393	0.190	-2.196**
0.490	-0.237	0.150	-1.324	0.150	-1.374	0.250	-1.406
0.590	-0.304	0.200	-1.249	0.210	-1.218	0.400	-0.791
0.630	-0.295	0.250	-1.137	0.250	-0.707	0.490	-0.441
0.700	-0.252	0.260	-0.908	0.340	-0.738	0.580	-0.274
0.750	-0.324	0.280	-0.997	0.370	-0.740	0.650	-0.249
0.810	-0.319	0.290	-0.910	0.400	-0.749	0.700	-0.252
0.840	-0.294	0.310	-0.842	0.410	-3.195**	0.750	-0.220
0.900	-0.220	0.320	-0.799	0.430	-0.656	0.800	-0.249
0.960	-0.125	0.340	-0.725	0.440	-0.631	0.830	-0.202
		0.350	-0.379**	0.460	-0.648	0.900	-0.129
		0.370	-0.633	0.490	-0.598	0.960	-0.066
		0.380	-0.666	0.500	-0.637		
		0.400	-0.510	0.520	-0.583		
		0.410	-0.558	0.540	-0.607		
		0.430	-0.533	0.550	-0.555		
		0.440	-0.431	0.580	-0.506		
		0.460	-0.486	0.600	-0.525		
		0.470	-0.421	0.610	-0.536		
		0.490	-0.368	0.650	2.861**		
		0.500	-0.370	0.700	-0.498		
		0.520	-0.368	0.750	-0.561		
		0.530	-0.303	0.820	-0.389		
		0.550	-0.363	0.890	-0.236		
		0.560	-0.282	0.900	-0.249		
		0.580	-0.310	0.960	-0.154		
		0.590	-0.268				
		0.600	-0.294				
		0.640	-0.207				
		0.700	-0.237				
		0.750	-0.003**				
		0.820	-0.156				
		0.870	-0.188				
		0.930	-0.178				
		0.960	-0.163				
			Lower Surface				
0.020	0.265	0.020	0.511	0.020	0.590	0.020	0.784
0.110	0.023	0.060	0.349	0.060	0.456	0.060	2.571**
0.230	0.035	0.090	0.243	0.090	1.869**	0.110	0.317
0.400	-0.020	0.120	0.170	0.120	-0.024	0.250	0.062
0.490	-0.008	0.200	0.108	0.200	0.065	0.400	0.001
0.630	2.631**	0.260	0.002	0.250	0.082	0.490	-0.087
0.750	-0.011	0.400	-0.024	0.400	-0.012	0.580	-0.150
0.850	0.072	0.490	-0.073	0.490	0.007	0.650	-0.038
0.900	0.137	0.580	-0.090	0.580	-0.081	0.750	0.158
0.960	0.106	0.640	0.051	0.650	-0.022	0.830	0.313
		0.750	0.177	0.750	0.000	0.900	0.329
		0.870	0.209	0.890	0.246	0.960	0.234
		0.930	0.137	0.930	0.193		
		0.960	0.074	0.960	-3.282**		
CN =	0.504		0.676		0.722		0.792

Table E-2. Continued.

Flight 216, Wing sweep = 26°, Time = 10-32-45-500, MINF = 0.803, Camber = 5/2, ALPT = 5.49, BETA = 0.05, QINF = 303.4, RNPU = 2.5E+06, CNWP = 0.2974

η = 0.93		0.76		0.59		0.40	
			Upper Surface				
x/c	CP	*x/c*	CP	*x/c*	CP	*x/c*	CP
0.020	0.138	0.000	0.728	0.000	0.463**	0.010	-0.548
0.060	-0.191	0.020	-0.144	0.020	-0.073	0.020	-0.364
0.110	-0.419	0.040	-0.051	0.060	0.030**	0.060	-0.750
0.200	-0.310	0.060	-0.406	0.090	-0.511	0.110	-0.905
0.230	-0.310	0.090	-0.482	0.110	-0.707	0.140	-1.111
0.400	-0.233	0.130	-0.629	0.130	-2.218**	0.190	-2.218**
0.490	-0.212	0.150	-0.843	0.150	-0.933	0.250	-0.682
0.590	-0.234	0.200	-0.877	0.210	-0.963	0.400	-0.397
0.630	-0.252	0.250	-0.955	0.250	-0.951	0.490	-0.343
0.700	-0.211	0.260	-0.569	0.340	-0.336	0.580	-0.338
0.750	-0.253	0.280	-0.374	0.370	-0.345	0.650	-0.407
0.810	-0.247	0.290	-0.305	0.400	-0.333	0.700	-0.382
0.840	-0.226	0.310	-0.291	0.410	-3.202**	0.750	-0.407
0.900	-0.136	0.320	-0.294	0.430	-0.360	0.800	-0.380
0.960	-0.028	0.340	-0.281	0.440	-0.316	0.830	-0.327
		0.350	-0.174**	0.460	-0.343	0.900	-0.187
		0.370	-0.287	0.490	-0.331	0.960	-0.007
		0.380	-0.332	0.500	-0.351		
		0.400	-0.264	0.520	-0.352		
		0.410	-0.327	0.540	-0.326		
		0.430	-0.296	0.550	-0.327		
		0.440	-0.256	0.580	-0.319		
		0.460	-0.325	0.600	-0.338		
		0.470	-0.323	0.610	-0.346		
		0.490	-0.311	0.650	-0.586		
		0.500	-0.316	0.700	-0.404		
		0.520	-0.312	0.750	-0.432		
		0.530	-0.305	0.820	-0.340		
		0.550	-0.351	0.890	-0.133		
		0.560	-0.332	0.900	-0.096		
		0.580	-0.303	0.960	0.046		
		0.590	-0.340				
		0.600	-0.344				
		0.640	-0.375				
		0.700	-0.342				
		0.750	-0.021**				
		0.820	-0.276				
		0.870	-0.236				
		0.930	-0.102				
		0.960	-0.027				
			Lower Surface				
0.020	-0.519	0.020	-0.400	0.020	-0.244	0.020	0.071
0.110	-0.179	0.060	-0.064	0.060	0.009	0.060	-0.016
0.230	-0.025	0.090	-0.108	0.090	-0.036	0.110	-0.039
0.400	-0.071	0.120	-0.081	0.120	-0.307	0.250	-0.158
0.490	-0.048	0.200	-0.026	0.200	-0.059	0.400	-0.182
0.630	4.035**	0.260	-0.108	0.250	-0.103	0.490	-0.229
0.750	0.009	0.400	-0.101	0.400	-0.140	0.580	-0.252
0.850	0.082	0.490	-0.131	0.490	-0.040	0.650	-0.121
0.900	0.180	0.580	-0.134	0.580	-0.177	0.750	0.126
0.960	0.143	0.640	0.039	0.650	-0.048	0.830	0.270
		0.750	0.180	0.750	-0.026	0.900	0.320
		0.870	0.217	0.890	0.288	0.960	0.257
		0.930	0.225	0.930	0.245		
		0.960	0.175	0.960	0.378		
CN =	0.208		0.367		0.395		0.428

Table E-2. Continued.

Flight 216, Wing sweep = 26°, Time = 10-33-21-500, MINF = 0.806, Camber = 5/2, ALPT = 6.89, BETA = -0.59, QINF = 305.6, RNPU = 2.5E+06, CNWP = 0.3231

η = 0.93		0.76		0.59		0.40	
			Upper Surface				
x/c	CP	x/c	CP	x/c	CP	x/c	CP
0.020	-0.058	0.000	0.817	0.000	0.432**	0.010	-0.830
0.060	-0.346	0.020	-0.347	0.020	-0.307	0.020	-0.708
0.110	-0.506	0.040	-0.243	0.060	-0.169**	0.060	-0.887
0.200	-0.956	0.060	-0.585	0.090	-0.763	0.110	-1.081
0.230	-0.815	0.090	-0.580	0.110	-0.870	0.140	-1.295
0.400	-0.231	0.130	-0.746	0.130	-2.201**	0.190	-2.201**
0.490	-0.221	0.150	-0.932	0.150	-1.050	0.250	-1.190
0.590	-0.281	0.200	-0.971	0.210	-1.056	0.400	-0.421
0.630	-0.273	0.250	-1.060	0.250	-1.067	0.490	-0.359
0.700	-0.239	0.260	-1.011	0.340	-0.821	0.580	-0.345
0.750	-0.285	0.280	-1.046	0.370	-0.512	0.650	-0.393
0.810	-0.280	0.290	-1.029	0.400	-0.373	0.700	-0.378
0.840	-0.261	0.310	-0.985	0.410	-3.179**	0.750	-0.390
0.900	-0.172	0.320	-0.996	0.430	-0.328	0.800	-0.353
0.960	-0.063	0.340	-0.706	0.440	-0.283	0.830	-0.306
		0.350	-0.272**	0.460	-0.297	0.900	-0.150
		0.370	-0.357	0.490	-0.269	0.960	0.005
		0.380	-0.342	0.500	-0.302		
		0.400	-0.240	0.520	-0.300		
		0.410	-0.258	0.540	-0.296		
		0.430	-0.214	0.550	-0.301		
		0.440	-0.178	0.580	-0.299		
		0.460	-0.252	0.600	-0.311		
		0.470	-0.225	0.610	-0.309		
		0.490	-0.253	0.650	-0.590		
		0.500	-0.270	0.700	-0.390		
		0.520	-0.272	0.750	-0.432		
		0.530	-0.271	0.820	-0.346		
		0.550	-0.321	0.890	-0.131		
		0.560	-0.311	0.900	-0.095		
		0.580	-0.281	0.960	0.036		
		0.590	-0.325				
		0.600	-0.332				
		0.640	-0.372				
		0.700	-0.353				
		0.750	-0.020**				
		0.820	-0.296				
		0.870	-0.248				
		0.930	-0.112				
		0.960	-0.037				
			Lower Surface				
0.020	-0.376	0.020	-0.149	0.020	-0.028	0.020	0.309
0.110	-0.125	0.060	0.047	0.060	0.132	0.060	-0.019
0.230	0.013	0.090	-0.007	0.090	0.061	0.110	0.061
0.400	-0.059	0.120	-0.008	0.120	-0.212	0.250	-0.092
0.490	-0.032	0.200	0.017	0.200	-0.019	0.400	-0.127
0.630	4.007**	0.260	-0.057	0.250	-0.045	0.490	-0.183
0.750	0.009	0.400	-0.067	0.400	-0.090	0.580	-0.211
0.850	0.067	0.490	-0.104	0.490	-0.039	0.650	-0.106
0.900	0.163	0.580	-0.106	0.580	-0.140	0.750	0.135
0.960	0.121	0.640	0.062	0.650	-0.032	0.830	0.277
		0.750	0.179	0.750	-0.025	0.900	0.324
		0.870	0.234	0.890	0.301	0.960	0.256
		0.930	0.213	0.930	0.255		
		0.960	0.170	0.960	0.356		
CN =	0.338		0.483		0.502		0.567

Table E-2. Continued.

Flight 191, Wing sweep = 26°, Time = 11-2-4-000, MINF = 0.790, Camber = 5/2, ALPT = 5.99, BETA = 0.21, QINF = 291.5, RNPU = 2.4E+06, CNWP = 0.3648

η = 0.93		0.76		0.59		0.40	
			Upper Surface				
x/c	CP	*x/c*	CP	*x/c*	CP	*x/c*	CP
0.020	0.105	0.000	0.776	0.000	-5.299**	0.010	-0.636
0.060	-0.178	0.020	-0.237	0.020	-0.108	0.020	-0.421
0.110	-0.282	0.040	-0.139	0.060	-0.198**	0.060	-0.839
0.200	-0.324	0.060	-0.433	0.090	-0.573	0.110	-0.990
0.230	-0.404	0.090	-0.527	0.110	-0.799	0.140	-1.136
0.400	-0.237	0.130	-0.692	0.130	-0.869	0.190	-5.970**
0.490	-0.213	0.150	-0.893	0.150	-0.991	0.250	-0.532
0.590	-0.248	0.200	-0.891	0.210	-1.062	0.400	-0.350
0.630	-0.242	0.250	-0.557**	0.250	-0.953	0.490	-0.376
0.700	-0.197	0.260	-0.296	0.340	-0.331	0.580	-0.369
0.750	-0.245	0.280	-0.353	0.370	-0.339	0.650	-0.385
0.810	-0.292	0.290	-0.343	0.400	-0.372	0.700	-0.394
0.840	-0.216	0.310	-0.321	0.410	-0.314	0.750	-0.413
0.900	-0.120	0.320	-0.295	0.430	-0.360	0.800	-0.410
0.960	-0.049	0.340	-0.302	0.440	-0.336	0.830	-0.339
		0.350	-0.221**	0.460	-0.342	0.900	-0.166
		0.370	-0.295	0.490	-0.276	0.960	-0.002
		0.380	-0.323	0.500	-0.361		
		0.400	-0.220	0.520	-0.299		
		0.410	-0.358	0.540	-0.322		
		0.430	-0.330	0.550	-0.340		
		0.440	-0.252	0.580	-0.345		
		0.460	-0.396	0.600	-0.324		
		0.470	-0.313	0.610	-0.276		
		0.490	-0.316	0.650	-3.158**		
		0.500	-0.308	0.700	-0.427		
		0.520	-0.330	0.750	-0.490		
		0.530	-0.275	0.820	-0.342		
		0.550	-0.332	0.890	-0.132		
		0.560	-0.313	0.900	-0.106		
		0.580	-0.284	0.960	0.004		
		0.590	-0.323				
		0.600	-0.379				
		0.640	-2.992**				
		0.700	-0.339				
		0.750	-0.272				
		0.820	-3.170**				
		0.870	-0.225				
		0.930	-0.094				
		0.960	-0.015				
			Lower Surface				
0.020	-0.449	0.020	-0.355	0.020	-0.231	0.020	0.094
0.110	-0.160	0.060	-0.020	0.060	0.078	0.060	2.723**
0.230	0.000	0.090	-0.085	0.090	-0.039	0.110	-0.071
0.400	-0.036	0.120	-0.021	0.120	-0.420**	0.250	-0.122
0.490	-0.078	0.200	0.015	0.200	-0.124	0.400	-0.141
0.630	2.748**	0.260	-0.130	0.250	-0.052	0.490	-0.252
0.750	0.023	0.400	-3.188**	0.400	-0.108	0.580	-0.229
0.850	0.107	0.490	-0.124	0.490	0.015	0.650	-0.112
0.900	0.192	0.580	-0.042	0.580	-0.149	0.750	0.138
0.960	0.151	0.640	0.286	0.650	0.024	0.830	0.292
		0.750	0.174	0.750	0.268	0.900	0.380
		0.870	0.221	0.890	********	0.960	0.283
		0.930	0.231	0.930	0.268		
		0.960	0.147	0.960	-2.920**		
CN =	0.218		0.382		0.472		0.434

Table E-2. Continued.

Flight 191, Wing sweep = 26°, Time = 11-2-10-500, MINF = 0.789, Camber = 5/2, ALPT = 7.09, BETA = 0.42, QINF = 291.4, RNPU = 2.4E+06, CNWP = 0.3776

η = 0.93		0.76		0.59		0.40	
			Upper Surface				
x/c	CP	*x/c*	CP	*x/c*	CP	*x/c*	CP
0.020	-0.064	0.000	0.870	0.000	-5.307**	0.010	-0.996
0.060	-0.321	0.020	-0.505	0.020	-0.330	0.020	-0.586
0.110	-0.496	0.040	-0.288	0.060	-0.283**	0.060	-0.960
0.200	-0.968	0.060	-0.582	0.090	-0.737	0.110	-1.144
0.230	-0.366	0.090	-0.625	0.110	-0.930	0.140	-1.279
0.400	-0.228	0.130	-0.791	0.130	-0.972	0.190	-5.978**
0.490	-0.219	0.150	-0.977	0.150	-1.059	0.250	-0.869
0.590	-0.251	0.200	-0.967	0.210	-1.130	0.400	-0.348
0.630	-0.253	0.250	-1.138**	0.250	-1.079	0.490	-0.377
0.700	-0.199	0.260	-0.996	0.340	-0.448	0.580	-0.360
0.750	-0.252	0.280	-1.081	0.370	-0.330	0.650	-0.376
0.810	-0.299	0.290	-0.960	0.400	-0.333	0.700	-0.379
0.840	-0.234	0.310	-0.480	0.410	-0.265	0.750	-0.389
0.900	-0.136	0.320	-0.407	0.430	-0.319	0.800	-0.371
0.960	-0.070	0.340	-0.315	0.440	-0.288	0.830	-0.306
		0.350	-0.185**	0.460	-0.319	0.900	-0.144
		0.370	-0.222	0.490	-0.251	0.960	0.012
		0.380	-0.245	0.500	-0.313		
		0.400	-0.155	0.520	-0.255		
		0.410	-0.289	0.540	-0.313		
		0.430	-0.272	0.550	-0.319		
		0.440	-0.209	0.580	-0.300		
		0.460	-0.350	0.600	-0.303		
		0.470	-0.271	0.610	-0.253		
		0.490	-0.283	0.650	-3.165**		
		0.500	-0.282	0.700	-0.385		
		0.520	-0.289	0.750	-0.473		
		0.530	-0.270	0.820	-0.333		
		0.550	-0.314	0.890	-0.127		
		0.560	-0.285	0.900	-0.099		
		0.580	-0.275	0.960	0.013		
		0.590	-0.314				
		0.600	-0.375				
		0.640	-2.999**				
		0.700	-0.330				
		0.750	-0.281				
		0.820	-3.177**				
		0.870	-0.219				
		0.930	-0.096				
		0.960	-0.002				
			Lower Surface				
0.020	-0.402	0.020	-0.135	0.020	-0.028	0.020	0.281
0.110	-0.111	0.060	0.096	0.060	0.196	0.060	2.718**
0.230	0.044	0.090	0.003	0.090	0.069	0.110	0.022
0.400	0.003	0.120	0.011	0.120	-0.322**	0.250	-0.048
0.490	-0.054	0.200	0.061	0.200	-0.042	0.400	-0.079
0.630	2.743**	0.260	-0.072	0.250	0.003	0.490	-0.196
0.750	0.051	0.400	-3.195**	0.400	-0.057	0.580	-0.198
0.850	0.105	0.490	-0.088	0.490	0.017	0.650	-0.088
0.900	0.188	0.580	-0.029	0.580	-0.118	0.750	0.157
0.960	0.147	0.640	0.301	0.650	0.044	0.830	0.315
		0.750	0.166	0.750	0.270	0.900	0.380
		0.870	0.230	0.890	********	0.960	0.284
		0.930	0.232	0.930	0.270		
		0.960	0.164	0.960	-2.927**		
CN =	0.306		0.479		0.534		0.538

Table E-2. Continued.

Flight 191, Wing sweep = 26°, Time = 11-2-17-500, MINF = 0.788, Camber = 5/2, ALPT = 8.09, BETA = 0.42, QINF = 292.3, RNPU = 2.4E+06, CNWP = 0.4171

η = 0.93		0.76		0.59		0.40	
			Upper Surface				
x/c	CP	*x/c*	CP	*x/c*	CP	*x/c*	CP
0.020	-0.287	0.000	0.912	0.000	-5.304**	0.010	-1.012
0.060	-0.498	0.020	-0.755	0.020	-0.506	0.020	-1.015
0.110	-0.527	0.040	-0.431	0.060	-0.313**	0.060	-1.063
0.200	-1.032	0.060	-0.768	0.090	-0.926	0.110	-1.280
0.230	-0.927	0.090	-0.850	0.110	-1.081	0.140	-1.371
0.400	-0.240	0.130	-0.937	0.130	-1.116	0.190	-5.973**
0.490	-0.224	0.150	-1.083	0.150	-1.199	0.250	-1.394
0.590	-0.263	0.200	-1.048	0.210	-1.260	0.400	-0.367
0.630	-0.257	0.250	-1.239**	0.250	-1.200	0.490	-0.364
0.700	-0.211	0.260	-1.081	0.340	-0.999	0.580	-0.345
0.750	-0.268	0.280	-1.185	0.370	-0.618	0.650	-0.347
0.810	-0.327	0.290	-1.195	0.400	-0.546	0.700	-0.338
0.840	-0.247	0.310	-1.104	0.410	-0.430	0.750	-0.333
0.900	-0.161	0.320	-1.079	0.430	-0.427	0.800	-0.309
0.960	-0.096	0.340	-1.071	0.440	-0.329	0.830	-0.255
		0.350	-0.331**	0.460	-0.316	0.900	-0.094
		0.370	-0.460	0.490	-0.218	0.960	0.018
		0.380	-0.417	0.500	-0.300		
		0.400	-0.253	0.520	-0.198		
		0.410	-0.337	0.540	-0.238		
		0.430	-0.245	0.550	-0.265		
		0.440	-0.174	0.580	-0.260		
		0.460	-0.285	0.600	-0.262		
		0.470	-0.194	0.610	-0.192		
		0.490	-0.215	0.650	-3.168**		
		0.500	-0.224	0.700	-0.334		
		0.520	-0.231	0.750	-0.436		
		0.530	-0.220	0.820	-0.287		
		0.550	-0.264	0.890	-0.100		
		0.560	-0.243	0.900	-0.080		
		0.580	-0.231	0.960	0.015		
		0.590	-0.276				
		0.600	-0.341				
		0.640	-3.002**				
		0.700	-0.308				
		0.750	-0.271				
		0.820	-3.181**				
		0.870	-0.231				
		0.930	-0.078				
		0.960	-0.018				
			Lower Surface				
0.020	-0.199	0.020	0.067	0.020	0.135	0.020	0.426
0.110	-0.053	0.060	0.197	0.060	0.293	0.060	2.698**
0.230	0.085	0.090	0.099	0.090	0.158	0.110	0.087
0.400	0.013	0.120	0.105	0.120	-0.254**	0.250	0.009
0.490	-0.051	0.200	0.085	0.200	-0.036	0.400	-0.031
0.630	2.723**	0.260	-0.017	0.250	0.059	0.490	-0.155
0.750	0.022	0.400	-3.198**	0.400	-0.013	0.580	-0.159
0.850	0.095	0.490	-0.062	0.490	0.004	0.650	-0.062
0.900	0.178	0.580	-0.011	0.580	-0.092	0.750	0.179
0.960	0.132	0.640	0.313	0.650	0.061	0.830	0.320
		0.750	0.193	0.750	0.264	0.900	0.373
		0.870	0.231	0.890	********	0.960	0.279
		0.930	0.245	0.930	0.257		
		0.960	0.158	0.960	-2.931**		
CN =	0.395		0.590		0.624		0.657

Table E-2. Continued.

Flight 191, Wing sweep = 26°, Time = 11-2-24-000, MINF = 0.790, Camber = 5/2, ALPT = 10.07, BETA = 0.36, QINF = 299.3, RNPU = 2.5E+06, CNWP = 0.4967

η = 0.93		0.76		0.59		0.40	
			Upper Surface				
x/c	CP	*x/c*	CP	*x/c*	CP	*x/c*	CP
0.020	-0.833	0.000	0.819	0.000	-5.222**	0.010	-1.227
0.060	-0.766	0.020	-1.219	0.020	-0.995	0.020	-1.229
0.110	-0.738	0.040	-0.816	0.060	-0.486**	0.060	-1.340
0.200	-1.148	0.060	-0.982	0.090	-1.141	0.110	-1.452
0.230	-1.040	0.090	-1.036	0.110	-1.300	0.140	-1.508
0.400	-0.235	0.130	-1.176	0.130	-1.316	0.190	-5.875**
0.490	-0.204	0.150	-1.285	0.150	-1.356	0.250	-1.588
0.590	-0.295	0.200	-1.263	0.210	-1.451	0.400	-0.863
0.630	-0.312	0.250	-1.416**	0.250	-1.366	0.490	-0.378
0.700	-0.251	0.260	-1.260	0.340	-0.790	0.580	-0.249
0.750	-0.316	0.280	-1.366	0.370	-0.731	0.650	-0.257
0.810	-0.372	0.290	-1.385	0.400	-0.759	0.700	-0.230
0.840	-0.316	0.310	-1.232	0.410	-0.670	0.750	-0.237
0.900	-0.226	0.320	-1.202	0.430	-0.710	0.800	-0.266
0.960	-0.158	0.340	-0.898	0.440	-0.662	0.830	-0.187
		0.350	-0.345**	0.460	-0.672	0.900	-0.114
		0.370	-0.692	0.490	-0.569	0.960	-0.038
		0.380	-0.688	0.500	-0.643		
		0.400	-0.580	0.520	-0.577		
		0.410	-0.639	0.540	-0.580		
		0.430	-0.557	0.550	-0.590		
		0.440	-0.453	0.580	-0.555		
		0.460	-0.540	0.600	-0.510		
		0.470	-0.409	0.610	-0.390		
		0.490	-0.414	0.650	-3.136**		
		0.500	-0.370	0.700	-0.404		
		0.520	-0.372	0.750	-0.497		
		0.530	-0.305	0.820	-0.270		
		0.550	-0.306	0.890	-0.155		
		0.560	-0.285	0.900	-0.174		
		0.580	-0.277	0.960	-0.141		
		0.590	-0.293				
		0.600	-0.362				
		0.640	-2.975**				
		0.700	-0.282				
		0.750	-0.228				
		0.820	-3.149**				
		0.870	-0.196				
		0.930	-0.095				
		0.960	-0.047				
			Lower Surface				
0.020	0.001	0.020	0.370	0.020	0.382	0.020	0.617
0.110	0.031	0.060	0.353	0.060	0.460	0.060	2.590**
0.230	0.151	0.090	0.218	0.090	0.287	0.110	0.212
0.400	0.017	0.120	0.207	0.120	-0.115**	0.250	0.100
0.490	-0.035	0.200	0.167	0.200	0.041	0.400	0.032
0.630	2.615**	0.260	0.049	0.250	0.146	0.490	-0.092
0.750	0.018	0.400	-3.166**	0.400	0.004	0.580	-0.109
0.850	0.073	0.490	-0.030	0.490	0.034	0.650	-0.046
0.900	0.154	0.580	0.000	0.580	-0.061	0.750	0.180
0.960	0.103	0.640	0.298	0.650	0.060	0.830	0.323
		0.750	0.170	0.750	0.273	0.900	0.381
		0.870	0.204	0.890	********	0.960	0.252
		0.930	0.200	0.930	0.227		
		0.960	0.114	0.960	-2.905**		
CN =	0.484		0.725		0.796		0.809

Table E-2. Continued.

Flight 216, Wing sweep = 26°, Time = 10-12-44-000, MINF = 0.801, Camber = 5/6, ALPT = 5.01, BETA = -0.10, QINF = 302.1, RNPU = 2.5E+06, CNWP = 0.3585

η = 0.93		0.76		0.59		0.40	
			Upper Surface				
x/c	CP	*x/c*	CP	*x/c*	CP	*x/c*	CP
0.020	0.184	0.000	0.692	0.000	0.625**	0.010	-0.459
0.060	-0.177	0.020	0.001	0.020	-0.027	0.020	-0.315
0.110	-0.498	0.040	-0.015	0.060	-0.195**	0.060	-0.724
0.200	-0.309	0.060	-0.347	0.090	-0.515	0.110	-0.856
0.230	-0.337	0.090	-0.446	0.110	-0.669	0.140	-1.031
0.400	-0.257	0.130	-0.609	0.130	-2.228**	0.190	-2.228**
0.490	-0.242	0.150	-0.816	0.150	-0.923	0.250	-0.643
0.590	-0.323	0.200	-0.855	0.210	-0.943	0.400	-0.404
0.630	-0.343	0.250	-0.630	0.250	-0.933	0.490	-0.362
0.700	-0.385	0.260	-0.394	0.340	-0.368	0.580	-0.377
0.750	-0.664	0.280	-0.329	0.370	-0.396	0.650	-0.475
0.810	-0.525	0.290	-0.330	0.400	-0.364	0.700	-0.436
0.840	-0.520	0.310	-0.320	0.410	-3.216**	0.750	-0.510
0.900	-0.202	0.320	-0.336	0.430	-0.392	0.800	-0.775
0.960	-0.056	0.340	-0.349	0.440	-0.385	0.830	-0.945
		0.350	-0.182**	0.460	-0.376	0.900	-0.150
		0.370	-0.336	0.490	-0.371	0.960	-0.081
		0.380	-0.382	0.500	-0.394		
		0.400	-0.327	0.520	-0.392		
		0.410	-0.357	0.540	-0.379		
		0.430	-0.341	0.550	-0.361		
		0.440	-0.311	0.580	-0.341		
		0.460	-0.344	0.600	-0.402		
		0.470	-0.368	0.610	-0.420		
		0.490	-0.368	0.650	-0.716		
		0.500	-0.353	0.700	-0.642		
		0.520	-0.376	0.750	-0.595		
		0.530	-0.359	0.820	-0.892		
		0.550	-0.419	0.890	-0.167		
		0.560	-0.405	0.900	-0.123		
		0.580	-0.370	0.960	-0.043		
		0.590	-0.420				
		0.600	-0.395				
		0.640	-0.608				
		0.700	-0.463				
		0.750	-0.021**				
		0.820	-0.487				
		0.870	-0.433				
		0.930	-0.312				
		0.960	-0.227				
			Lower Surface				
0.020	-0.479	0.020	-0.432	0.020	-0.293	0.020	0.025
0.110	-0.163	0.060	-0.065	0.060	-0.015	0.060	-0.005
0.230	-0.014	0.090	-0.106	0.090	-0.044	0.110	-0.030
0.400	-0.038	0.120	-0.067	0.120	-0.268	0.250	-0.170
0.490	0.018	0.200	-0.023	0.200	-0.024	0.400	-0.169
0.630	4.053**	0.260	-0.065	0.250	-0.089	0.490	-0.179
0.750	0.092	0.400	-0.065	0.400	-0.092	0.580	-0.145
0.850	0.143	0.490	-0.065	0.490	-0.033	0.650	-0.008
0.900	0.258	0.580	-0.040	0.580	-0.069	0.750	0.226
0.960	0.176	0.640	0.162	0.650	-0.018	0.830	0.359
		0.750	0.267	0.750	-0.011	0.900	0.410
		0.870	0.306	0.890	0.397	0.960	0.279
		0.930	0.265	0.930	0.327		
		0.960	0.183	0.960	0.311		
CN =	0.342		0.486		0.517		0.526

Table E-2. Continued.

Flight 216, Wing sweep = 26°, Time = 10-13-5-500, MINF = 0.811, Camber = 5/6, ALPT = 6.08, BETA = 0.11, QINF = 308.1, RNPU = 2.5E+06, CNWP = 0.3883

η = 0.93		0.76		0.59		0.40	
			Upper Surface				
x/c	CP	*x/c*	CP	*x/c*	CP	*x/c*	CP
0.020	0.052	0.000	0.781	0.000	0.657**	0.010	-0.719
0.060	-0.265	0.020	-0.155	0.020	-0.180	0.020	-0.415
0.110	-0.467	0.040	-0.115	0.060	-0.371**	0.060	-0.806
0.200	-0.913	0.060	-0.451	0.090	-0.642	0.110	-0.963
0.230	-0.767	0.090	-0.522	0.110	-0.716	0.140	-1.143
0.400	-0.257	0.130	-0.684	0.130	-2.175**	0.190	-2.175**
0.490	-0.260	0.150	-0.858	0.150	-0.952	0.250	-1.101
0.590	-0.334	0.200	-0.912	0.210	-0.969	0.400	-0.434
0.630	-0.370	0.250	-0.978	0.250	-0.997	0.490	-0.396
0.700	-0.379	0.260	-0.960	0.340	-1.011	0.580	-0.390
0.750	-0.800	0.280	-0.980	0.370	-0.560	0.650	-0.485
0.810	-0.735	0.290	-0.940	0.400	-0.390	0.700	-0.463
0.840	-0.742	0.310	-0.905	0.410	-3.144**	0.750	-0.533
0.900	-0.249	0.320	-0.930	0.430	-0.345	0.800	-0.882
0.960	-0.094	0.340	-0.936	0.440	-0.313	0.830	-0.962
		0.350	-0.303**	0.460	-0.325	0.900	-0.137
		0.370	-0.401	0.490	-0.295	0.960	-0.070
		0.380	-0.347	0.500	-0.349		
		0.400	-0.243	0.520	-0.356		
		0.410	-0.261	0.540	-0.336		
		0.430	-0.234	0.550	-0.334		
		0.440	-0.211	0.580	-0.342		
		0.460	-0.250	0.600	-0.367		
		0.470	-0.288	0.610	-0.402		
		0.490	-0.282	0.650	-0.692		
		0.500	-0.303	0.700	-0.616		
		0.520	-0.299	0.750	-0.602		
		0.530	-0.301	0.820	-0.879		
		0.550	-0.365	0.890	-0.165		
		0.560	-0.349	0.900	-0.135		
		0.580	-0.340	0.960	-0.054		
		0.590	-0.385				
		0.600	-0.387				
		0.640	-0.600				
		0.700	-0.470				
		0.750	-0.014**				
		0.820	-0.500				
		0.870	-0.468				
		0.930	-0.314				
		0.960	-0.227				
			Lower Surface				
0.020	-0.294	0.020	-0.250	0.020	-0.126	0.020	0.169
0.110	-0.139	0.060	0.005	0.060	0.084	0.060	0.005
0.230	0.007	0.090	-0.031	0.090	0.021	0.110	0.006
0.400	-0.021	0.120	-0.027	0.120	-0.195	0.250	-0.112
0.490	-0.009	0.200	0.023	0.200	-0.002	0.400	-0.127
0.630	3.984**	0.260	-0.026	0.250	-0.049	0.490	-0.144
0.750	0.104	0.400	-0.032	0.400	-0.075	0.580	-0.137
0.850	0.143	0.490	-0.043	0.490	-0.015	0.650	0.013
0.900	0.241	0.580	-0.025	0.580	-0.044	0.750	0.250
0.960	0.152	0.640	0.187	0.650	-0.029	0.830	0.364
		0.750	0.266	0.750	0.002	0.900	0.412
		0.870	0.328	0.890	0.392	0.960	0.309
		0.930	0.266	0.930	0.323		
		0.960	0.200	0.960	0.311		
CN =	0.458		0.586		0.592		0.647

Table E-2. Continued.

Flight 195, Wing sweep = 26°, Time = 9-49-26-500, MINF = 0.811, Camber = 5/6, ALPT = 7.02, BETA = 0.13, QINF = 280.8, RNPU = 2.3E+06, CNWP = 0.1721

η = 0.93		0.76		0.59		0.40	
			Upper Surface				
x/c	CP	*x/c*	CP	*x/c*	CP	*x/c*	CP
0.020	-0.056	0.000	0.859**	0.000	-6.122**	0.010	-0.894
0.060	-0.316	0.020	-0.436	0.020	-0.290	0.020	-0.671
0.110	-0.411	0.040	-0.264	0.060	-1.006**	0.060	-0.902
0.200	-0.955	0.060	-0.577	0.090	-0.749	0.110	-1.076
0.230	-0.825	0.090	-0.575	0.110	-0.880	0.140	2.019**
0.400	-0.209	0.130	-0.752	0.130	-0.927	0.190	-5.980**
0.490	-0.240	0.150	-0.903	0.150	-1.001	0.250	-1.179
0.590	-0.310	0.200	-0.902	0.210	-1.080	0.400	-0.476
0.630	-0.337	0.250	-1.069	0.250	-1.069	0.490	-0.445
0.700	-0.366	0.260	-0.977	0.340	-1.098	0.580	-0.413
0.750	-0.776	0.280	-1.040	0.370	-1.057	0.650	-0.478
0.810	-0.791	0.290	-1.051	0.400	-1.057	0.700	-0.474
0.840	-0.748	0.310	-0.962	0.410	-0.805	0.750	-0.541
0.900	-0.222	0.320	-0.954	0.430	-0.616	0.800	-0.762
0.960	-0.129	0.340	-1.000	0.440	-0.453	0.830	-0.952
		0.350	-0.419**	0.460	-0.397	0.900	-0.121
		0.370	-0.953	0.490	-0.282	0.960	-0.053
		0.380	-0.982	0.500	-0.308		
		0.400	-0.895	0.520	-0.277		
		0.410	-0.721	0.540	-0.281		
		0.430	-0.426	0.550	-0.297		
		0.440	-0.310	0.580	-0.303		
		0.460	-0.375	0.600	-0.330		
		0.470	-0.219	0.610	3.568		
		0.490	-0.229	0.650	-3.070**		
		0.500	-0.220	0.700	-0.509		
		0.520	-0.208	0.750	-0.522		
		0.530	-0.208	0.820	-0.880		
		0.550	-0.241	0.890	-0.140		
		0.560	-0.262	0.900	-0.104		
		0.580	-0.251	0.960	-0.059		
		0.590	-0.308				
		0.600	-0.336				
		0.640	-2.898**				
		0.700	-0.459				
		0.750	-0.664				
		0.820	-3.084**				
		0.870	-0.414				
		0.930	-0.280				
		0.960	-0.222				
			Lower Surface				
0.020	-0.321	0.020	-0.172	0.020	-0.019	0.020	0.267**
0.110	-0.102	0.060	0.111	0.060	0.188	0.060	6.865**
0.230	0.057	0.090	0.030	0.090	0.082	0.110	0.044
0.400	0.003	0.120	0.042	0.120	-0.250	0.250	-0.051
0.490	-0.009	0.200	0.098	0.200	-0.004	0.400	-0.059
0.630	4.535**	0.260	-0.005	0.250	0.030	0.490	-0.113
0.750	0.092	0.400	-3.102**	0.400	-0.016	0.580	-0.108
0.850	0.192	0.490	-0.004	0.490	0.071	0.650	0.036
0.900	0.242	0.580	0.060	0.580	-0.017	0.750	0.289
0.960	0.145	0.640	0.432	0.650	0.189	0.830	0.406
		0.750	0.253	0.750	0.062	0.900	0.470
		0.870	0.324	0.890	********	0.960	0.318
		0.930	0.291	0.930	0.348		
		0.960	0.173	0.960	-3.101**		
CN =	0.469		0.681		0.477		0.711

Table E-2. Continued.

Flight 195, Wing sweep = 26°, Time = 9-49-39-500, MINF = 0.800, Camber = 5/6, ALPT = 8.11, BETA = 0.02, QINF = 275.5, RNPU = 2.3E+06, CNWP = 0.4730

η = 0.93		0.76		0.59		0.40	
			Upper Surface				
x/c	CP	*x/c*	CP	*x/c*	CP	*x/c*	CP
0.020	-0.290	0.000	0.886**	0.000	-6.263**	0.010	-0.979
0.060	-0.519	0.020	-0.731	0.020	-0.522	0.020	-0.981
0.110	-0.608	0.040	-0.428	0.060	-1.190**	0.060	-1.056
0.200	-1.022	0.060	-0.749	0.090	-0.933	0.110	-1.223
0.230	-0.894	0.090	-0.828	0.110	-1.069	0.140	2.082**
0.400	-0.239	0.130	-0.935	0.130	-1.095	0.190	-6.119**
0.490	-0.232	0.150	-1.056	0.150	-1.123	0.250	-1.351
0.590	-0.325	0.200	-1.038	0.210	-1.236	0.400	-0.665
0.630	-0.360	0.250	-1.209	0.250	-1.200	0.490	-0.481
0.700	-0.385	0.260	-1.076	0.340	-1.245	0.580	-0.415
0.750	-0.792	0.280	-1.169	0.370	-1.198	0.650	-0.463
0.810	-0.840	0.290	-1.175	0.400	-1.188	0.700	-0.482
0.840	-0.788	0.310	-1.078	0.410	-1.171	0.750	-0.544
0.900	-0.271	0.320	-1.077	0.430	-1.224	0.800	-0.481
0.960	-0.154	0.340	-1.133	0.440	-0.860	0.830	-0.439
		0.350	-0.426**	0.460	-0.660	0.900	-0.126
		0.370	-1.069	0.490	-0.505	0.960	-0.031
		0.380	-1.099	0.500	-0.514		
		0.400	-1.022	0.520	-0.453		
		0.410	-1.118	0.540	-0.416		
		0.430	-1.088	0.550	-0.380		
		0.440	-0.771	0.580	-0.323		
		0.460	-0.646	0.600	-0.342		
		0.470	-0.447	0.610	-0.216		
		0.490	-0.387	0.650	-3.153**		
		0.500	-0.335	0.700	-0.414		
		0.520	-0.321	0.750	-0.504		
		0.530	-0.230	0.820	-0.545		
		0.550	-0.232	0.890	-0.123		
		0.560	-0.229	0.900	-0.088		
		0.580	-0.196	0.960	-0.012		
		0.590	-0.253				
		0.600	-0.287				
		0.640	-2.977**				
		0.700	-0.436				
		0.750	-0.708				
		0.820	-3.166**				
		0.870	-0.293				
		0.930	-0.213				
		0.960	-0.150				
			Lower Surface				
0.020	-0.100	0.020	0.093	0.020	0.141	0.020	0.456**
0.110	-0.022	0.060	0.230	0.060	0.295	0.060	6.973**
0.230	0.119	0.090	0.141	0.090	0.176	0.110	0.108
0.400	0.039	0.120	0.131	0.120	-0.186	0.250	0.030
0.490	0.015	0.200	0.147	0.200	0.037	0.400	0.008
0.630	4.598**	0.260	0.034	0.250	0.087	0.490	-0.067
0.750	0.114	0.400	-3.185**	0.400	0.024	0.580	-0.053
0.850	0.179	0.490	0.024	0.490	0.049	0.650	0.076
0.900	0.247	0.580	0.092	0.580	0.023	0.750	0.302
0.960	0.145	0.640	0.445	0.650	0.209	0.830	0.412
		0.750	0.272	0.750	0.071	0.900	0.496
		0.870	0.344	0.890	********	0.960	0.342
		0.930	0.313	0.930	0.374		
		0.960	0.188	0.960	-3.184**		
CN =	0.559		0.794		0.764		0.799

Table E-2. Continued.

Flight 195, Wing sweep = 26°, Time = 9-49-45-000, MINF = 0.798, Camber = 5/6, ALPT = 9.07, BETA = 0.10, QINF = 276.4, RNPU = 2.3E+06, CNWP = 0.5332

η = 0.93		0.76		0.59		0.40	
			Upper Surface				
x/c	CP	*x/c*	CP	*x/c*	CP	*x/c*	CP
0.020	-0.497	0.000	0.849**	0.000	-6.260**	0.010	-1.030
0.060	-0.607	0.020	-0.877	0.020	-0.808	0.020	-1.074
0.110	-0.736	0.040	-0.523	0.060	-1.177**	0.060	-1.198
0.200	-1.075	0.060	-0.816	0.090	-1.025	0.110	-1.317
0.230	-0.957	0.090	-0.952	0.110	-1.180	0.140	2.083**
0.400	-0.519	0.130	-1.058	0.130	-1.208	0.190	-6.116**
0.490	-0.233	0.150	-1.153	0.150	-1.223	0.250	-1.458
0.590	-0.310	0.200	-1.154	0.210	-1.340	0.400	-0.879
0.630	-0.354	0.250	-1.303	0.250	-1.283	0.490	-0.624
0.700	-0.381	0.260	-1.184	0.340	-1.328	0.580	-0.450
0.750	-0.816	0.280	-1.271	0.370	-1.308	0.650	-0.431
0.810	-0.865	0.290	-1.294	0.400	-1.272	0.700	-0.427
0.840	-0.827	0.310	-1.175	0.410	-1.256	0.750	-0.464
0.900	-0.305	0.320	-1.167	0.430	-1.339	0.800	-0.372
0.960	-0.193	0.340	-1.251	0.440	-1.289	0.830	-0.352
		0.350	-0.428**	0.460	-1.055	0.900	-0.125
		0.370	-1.177	0.490	-0.665	0.960	-0.027
		0.380	-1.203	0.500	-0.711		
		0.400	-1.118	0.520	-0.674		
		0.410	-1.230	0.540	-0.672		
		0.430	-1.199	0.550	-0.603		
		0.440	-1.084	0.580	-0.573		
		0.460	-1.307	0.600	-0.549		
		0.470	-1.023	0.610	-0.398		
		0.490	-0.658	0.650	-3.160**		
		0.500	-0.571	0.700	-0.371		
		0.520	-0.530	0.750	-0.445		
		0.530	-0.465	0.820	-0.360		
		0.550	-0.443	0.890	-0.126		
		0.560	-0.381	0.900	-0.080		
		0.580	-0.346	0.960	-0.029		
		0.590	-0.332				
		0.600	-0.319				
		0.640	-2.985**				
		0.700	-0.361				
		0.750	-0.601				
		0.820	-3.173**				
		0.870	-0.328				
		0.930	-0.123				
		0.960	-0.024				
			Lower Surface				
0.020	0.002	0.020	0.262	0.020	0.257	0.020	0.582**
0.110	0.022	0.060	0.312	0.060	0.389	0.060	6.933**
0.230	0.162	0.090	0.200	0.090	0.241	0.110	0.193
0.400	0.069	0.120	0.178	0.120	-0.089	0.250	0.066
0.490	0.037	0.200	0.185	0.200	0.093	0.400	0.046
0.630	4.566**	0.260	0.072	0.250	0.133	0.490	-0.036
0.750	0.123	0.400	-3.192**	0.400	0.065	0.580	-0.027
0.850	0.172	0.490	0.058	0.490	0.063	0.650	0.091
0.900	0.231	0.580	0.127	0.580	0.045	0.750	0.326
0.960	0.139	0.640	0.454	0.650	0.215	0.830	0.416
		0.750	0.311	0.750	0.085	0.900	0.519
		0.870	0.338	0.890	********	0.960	0.345
		0.930	0.319	0.930	0.363		
		0.960	0.214	0.960	-3.191**		
CN =	0.647		0.894		0.863		0.879

Table E-2. Continued.

Flight 195, Wing sweep = 26°, Time = 9-49-52-000, MINF = 0.797, Camber = 5/6, ALPT = 10.01, BETA = -0.16, QINF = 277.7, RNPU = 2.3E+06, CNWP = 0.6196

η = 0.93		0.76		0.59		0.40	
			Upper Surface				
x/c	CP	*x/c*	CP	*x/c*	CP	*x/c*	CP
0.020	-0.858	0.000	0.775**	0.000	-6.245**	0.010	-1.251
0.060	-0.798	0.020	-1.153	0.020	-1.008	0.020	-1.193
0.110	-0.793	0.040	-0.824	0.060	-1.234**	0.060	-1.290
0.200	-1.168	0.060	-0.961	0.090	-1.121	0.110	-1.410
0.230	-1.017	0.090	-1.031	0.110	-1.286	0.140	2.068**
0.400	-0.703	0.130	-1.140	0.130	-1.299	0.190	-6.102**
0.490	-0.231	0.150	-1.254	0.150	-1.281	0.250	-1.545
0.590	-0.311	0.200	-1.239	0.210	-1.424	0.400	-1.008
0.630	-0.383	0.250	-1.350	0.250	-1.362	0.490	-0.758
0.700	-0.414	0.260	-1.235	0.340	-1.437	0.580	-0.431
0.750	-0.799	0.280	-1.322	0.370	-1.403	0.650	-0.385
0.810	-0.851	0.290	-1.361	0.400	-1.352	0.700	-0.371
0.840	-0.822	0.310	-1.237	0.410	-1.334	0.750	-0.346
0.900	-0.329	0.320	-1.248	0.430	-1.049	0.800	-0.331
0.960	-0.199	0.340	-1.319	0.440	-0.827	0.830	-0.309
		0.350	-0.446**	0.460	-0.786	0.900	-0.123
		0.370	-1.264	0.490	-0.700	0.960	-0.042
		0.380	-1.294	0.500	-0.769		
		0.400	-1.209	0.520	-0.707		
		0.410	-1.268	0.540	-0.712		
		0.430	-0.859	0.550	-0.695		
		0.440	-0.759	0.580	-0.648		
		0.460	-0.833	0.600	-0.637		
		0.470	-0.707	0.610	-0.524		
		0.490	-0.665	0.650	-3.160**		
		0.500	-0.664	0.700	-0.468		
		0.520	-0.617	0.750	-0.484		
		0.530	-0.582	0.820	-0.315		
		0.550	-0.552	0.890	-0.189		
		0.560	-0.519	0.900	-0.195		
		0.580	-0.493	0.960	-0.151		
		0.590	-0.491				
		0.600	-0.453				
		0.640	-2.985**				
		0.700	-0.307				
		0.750	-0.400				
		0.820	-3.173**				
		0.870	-0.206				
		0.930	-0.133				
		0.960	-0.114				
			Lower Surface				
0.020	0.070	0.020	0.353	0.020	0.358	0.020	0.628**
0.110	0.059	0.060	0.352	0.060	0.438	0.060	6.886**
0.230	0.183	0.090	0.245	0.090	0.294	0.110	0.237
0.400	0.046	0.120	0.202	0.120	-0.066	0.250	0.102
0.490	0.014	0.200	0.212	0.200	0.115	0.400	0.087
0.630	4.530**	0.260	0.112	0.250	0.166	0.490	0.005
0.750	0.096	0.400	-3.192**	0.400	0.067	0.580	-0.009
0.850	0.160	0.490	0.048	0.490	0.072	0.650	0.100
0.900	0.217	0.580	0.103	0.580	0.046	0.750	0.315
0.960	0.119	0.640	0.459	0.650	0.211	0.830	0.431
		0.750	0.259	0.750	0.086	0.900	0.495
		0.870	0.308	0.890	********	0.960	0.338
		0.930	0.271	0.930	0.353		
		0.960	0.143	0.960	-3.190**		
CN =	0.696		0.898		0.922		0.938

Table E-2. Continued.

Flight 195, Wing sweep = 26°, Time = 10-12-53-000, MINF = 0.802, Camber = 5/10, ALPT = 5.00, BETA = -0.24, QINF = 292.2, RNPU = 2.4E+06, CNWP = 0.3467

η = 0.93		0.76		0.59		0.40	
			Upper Surface				
x/c	CP	*x/c*	CP	*x/c*	CP	*x/c*	CP
0.020	0.203	0.000	0.715**	0.000	-6.019**	0.010	-0.389
0.060	-0.108	0.020	-0.067	0.020	0.026	0.020	-0.262
0.110	-0.360	0.040	-0.041	0.060	-0.932**	0.060	-0.678
0.200	-0.306	0.060	-0.318	0.090	-0.479	0.110	-0.776
0.230	-0.343	0.090	-0.431	0.110	-0.682	0.140	1.968**
0.400	-0.240	0.130	-0.607	0.130	-0.792	0.190	-5.883**
0.490	-0.238	0.150	-0.811	0.150	-0.870	0.250	-0.595
0.590	-0.306	0.200	-0.793	0.210	-0.961	0.400	-0.371
0.630	-0.343	0.250	-0.453	0.250	-0.737	0.490	-0.393
0.700	-0.389	0.260	-0.273	0.340	-0.375	0.580	-0.393
0.750	-0.840	0.280	-0.329	0.370	-0.410	0.650	-0.460
0.810	-0.902	0.290	-0.325	0.400	-0.380	0.700	-0.462
0.840	-0.934	0.310	-0.318	0.410	-0.359	0.750	-0.542
0.900	-0.220	0.320	-0.316	0.430	-0.404	0.800	-0.981
0.960	-0.233	0.340	-0.345	0.440	-0.382	0.830	-0.593
		0.350	-0.186**	0.460	-0.376	0.900	-0.400
		0.370	-0.322	0.490	-0.316	0.960	-0.399
		0.380	-0.337	0.500	-0.384		
		0.400	-0.270	0.520	-0.355		
		0.410	-0.363	0.540	-0.385		
		0.430	-0.328	0.550	-0.366		
		0.440	-0.276	0.580	-0.348		
		0.460	-0.419	0.600	-0.405		
		0.470	-0.369	0.610	-0.326		
		0.490	-0.345	0.650	-3.085**		
		0.500	-0.339	0.700	-0.617		
		0.520	-0.365	0.750	-0.626		
		0.530	-0.332	0.820	-0.614		
		0.550	-0.373	0.890	-0.284		
		0.560	-0.371	0.900	-0.313		
		0.580	-0.342	0.960	-0.305		
		0.590	-0.394				
		0.600	-0.423				
		0.640	-2.920**				
		0.700	-0.549				
		0.750	-0.649				
		0.820	-3.098**				
		0.870	-0.310				
		0.930	-0.254				
		0.960	-0.247				
			Lower Surface				
0.020	-0.501	0.020	-0.395	0.020	-0.325	0.020	-0.010**
0.110	-0.145	0.060	-0.023	0.060	0.033	0.060	6.464**
0.230	0.027	0.090	-0.080	0.090	-0.060	0.110	-0.083
0.400	0.041	0.120	-0.028	0.120	-0.352	0.250	-0.122
0.490	0.029	0.200	0.046	0.200	-0.067	0.400	-0.090
0.630	4.224**	0.260	-0.057	0.250	-0.039	0.490	-0.124
0.750	0.189	0.400	-3.116**	0.400	-0.037	0.580	-0.067
0.850	0.259	0.490	0.015	0.490	0.046	0.650	0.126
0.900	0.323	0.580	0.117	0.580	0.036	0.750	0.368
0.960	0.146	0.640	0.479	0.650	0.271	0.830	0.456
		0.750	0.322	0.750	0.067	0.900	0.542
		0.870	0.402	0.890	********	0.960	0.352
		0.930	0.344	0.930	0.400		
		0.960	0.185	0.960	-3.115**		
CN =	0.430		0.548		0.542		0.582

Table E-2. Continued.

Flight 195, Wing sweep = 26°, Time = 10-13-9-500, MINF = 0.797, Camber = 5/10, ALPT = 7.05, BETA = -0.16, QINF = 286.8, RNPU = 2.4E+06, CNWP = 0.4229

η = 0.93		0.76		0.59		0.40	
			Upper Surface				
x/c	CP	*x/c*	CP	*x/c*	CP	*x/c*	CP
0.020	-0.096	0.000	0.878**	0.000	-6.120**	0.010	-0.944
0.060	-0.336	0.020	-0.481	0.020	-0.335	0.020	-0.792
0.110	-0.424	0.040	-0.315	0.060	-1.092**	0.060	-0.908
0.200	-0.993	0.060	-0.604	0.090	-0.791	0.110	-1.130
0.230	-0.821	0.090	-0.595	0.110	-0.905	0.140	2.003**
0.400	-0.250	0.130	-0.770	0.130	-0.977	0.190	-5.982**
0.490	-0.255	0.150	-0.950	0.150	-1.017	0.250	-1.204
0.590	-0.326	0.200	-0.944	0.210	-1.136	0.400	-0.425
0.630	-0.368	0.250	-1.117	0.250	-1.089	0.490	-0.424
0.700	-0.413	0.260	-1.001	0.340	-1.129	0.580	-0.408
0.750	-1.022	0.280	-1.077	0.370	-0.746	0.650	-0.490
0.810	-1.087	0.290	-1.073	0.400	-0.537	0.700	-0.500
0.840	-1.080	0.310	-0.974	0.410	-0.420	0.750	-0.596
0.900	-0.300	0.320	-0.970	0.430	-0.417	0.800	-0.847
0.960	-0.316	0.340	-1.026	0.440	-0.341	0.830	-0.667
		0.350	-0.402**	0.460	-0.327	0.900	-0.391
		0.370	-0.612	0.490	-0.281	0.960	-0.304
		0.380	-0.430	0.500	-0.315		
		0.400	-0.294	0.520	-0.317		
		0.410	-0.329	0.540	-0.345		
		0.430	-0.234	0.550	-0.349		
		0.440	-0.205	0.580	-0.344		
		0.460	-0.313	0.600	-0.387		
		0.470	-0.248	0.610	-0.321		
		0.490	-0.252	0.650	-3.132**		
		0.500	-0.264	0.700	-0.596		
		0.520	-0.275	0.750	-0.616		
		0.530	-0.276	0.820	-0.660		
		0.550	-0.326	0.890	-0.247		
		0.560	-0.326	0.900	-0.261		
		0.580	-0.309	0.960	-0.262		
		0.590	-0.371				
		0.600	-0.410				
		0.640	-2.964**				
		0.700	-0.488				
		0.750	-0.673				
		0.820	-3.146**				
		0.870	-0.398				
		0.930	-0.248				
		0.960	-0.241				
			Lower Surface				
0.020	-0.283	0.020	-0.037	0.020	0.031	0.020	0.323**
0.110	-0.045	0.060	0.161	0.060	0.232	0.060	6.595**
0.230	0.109	0.090	0.086	0.090	0.117	0.110	0.047
0.400	0.067	0.120	0.098	0.120	-0.197	0.250	-0.002
0.490	0.048	0.200	0.126	0.200	0.032	0.400	0.003
0.630	4.314**	0.260	0.036	0.250	0.063	0.490	-0.042
0.750	0.187	0.400	-3.164**	0.400	0.036	0.580	0.000
0.850	0.246	0.490	0.042	0.490	0.065	0.650	0.166
0.900	0.304	0.580	0.153	0.580	0.082	0.750	0.385
0.960	0.123	0.640	0.508	0.650	0.302	0.830	0.486
		0.750	0.332	0.750	0.071	0.900	0.571
		0.870	0.397	0.890	********	0.960	0.378
		0.930	0.349	0.930	0.418		
		0.960	0.188	0.960	-3.162**		
CN =	0.599		0.723		0.722		0.808

Table E-2. Continued.

Flight 195, Wing sweep = 26°, Time = 10-13-22-000, MINF = 0.786, Camber = 5/10, ALPT = 7.08, BETA = -0.19, QINF = 276.7, RNPU = 2.3E+06, CNWP = 0.4066

η = 0.93		0.76		0.59		0.40	
			Upper Surface				
x/c	CP	*x/c*	CP	*x/c*	CP	*x/c*	CP
0.020	-0.142	0.000	0.884**	0.000	-6.322**	0.010	-1.010
0.060	-0.307	0.020	-0.533	0.020	-0.398	0.020	-0.853
0.110	-0.522	0.040	-0.354	0.060	-1.161**	0.060	-0.950
0.200	-1.008	0.060	-0.635	0.090	-0.840	0.110	-1.165
0.230	-0.779	0.090	-0.625	0.110	-0.957	0.140	2.084**
0.400	-0.269	0.130	-0.807	0.130	-1.015	0.190	-6.178**
0.490	-0.269	0.150	-0.985	0.150	-1.054	0.250	-1.024
0.590	-0.342	0.200	-0.982	0.210	-1.160	0.400	-0.426
0.630	-0.386	0.250	-1.151	0.250	-1.130	0.490	-0.438
0.700	-0.433	0.260	-1.017	0.340	-0.729	0.580	-0.397
0.750	-1.051	0.280	-1.115	0.370	-0.483	0.650	-0.500
0.810	-1.119	0.290	-1.101	0.400	-0.352	0.700	-0.522
0.840	-1.089	0.310	-1.001	0.410	-0.361	0.750	-0.610
0.900	-0.278	0.320	-0.996	0.430	-0.392	0.800	-0.832
0.960	-0.313	0.340	-0.656	0.440	-0.351	0.830	-0.669
		0.350	-0.213**	0.460	-0.351	0.900	-0.354
		0.370	-0.341	0.490	-0.308	0.960	-0.279
		0.380	-0.309	0.500	-0.377		
		0.400	-0.220	0.520	-0.356		
		0.410	-0.288	0.540	-0.389		
		0.430	-0.264	0.550	-0.381		
		0.440	-0.214	0.580	-0.387		
		0.460	-0.372	0.600	-0.423		
		0.470	-0.308	0.610	-0.341		
		0.490	-0.312	0.650	-3.225**		
		0.500	-0.323	0.700	-0.638		
		0.520	-0.343	0.750	-0.643		
		0.530	-0.329	0.820	-0.631		
		0.550	-0.366	0.890	-0.243		
		0.560	-0.387	0.900	-0.263		
		0.580	-0.357	0.960	-0.261		
		0.590	-0.416				
		0.600	-0.460				
		0.640	-3.050**				
		0.700	-0.519				
		0.750	-0.706				
		0.820	-3.238**				
		0.870	-0.437				
		0.930	-0.254				
		0.960	-0.247				
			Lower Surface				
0.020	-0.222	0.020	-0.025	0.020	0.049	0.020	0.333**
0.110	-0.041	0.060	0.167	0.060	0.239	0.060	6.860**
0.230	0.104	0.090	0.093	0.090	0.123	0.110	0.062
0.400	0.069	0.120	0.101	0.120	-0.203	0.250	-0.003
0.490	0.049	0.200	0.126	0.200	0.029	0.400	0.010
0.630	4.495**	0.260	0.033	0.250	0.073	0.490	-0.040
0.750	0.173	0.400	-3.257**	0.400	0.034	0.580	0.002
0.850	0.242	0.490	0.055	0.490	0.059	0.650	0.168
0.900	0.303	0.580	0.150	0.580	0.080	0.750	0.385
0.960	0.119	0.640	0.515	0.650	0.297	0.830	0.486
		0.750	0.327	0.750	0.081	0.900	0.571
		0.870	0.413	0.890	********	0.960	0.370
		0.930	0.346	0.930	0.408		
		0.960	0.186	0.960	-3.255**		
CN =	0.603		0.740		0.705		0.787

Table E-2. Continued.

Flight 195, Wing sweep = 26°, Time = 10-13-56-500, MINF = 0.795, Camber = 5/10, ALPT = 8.14, BETA = -0.03, QINF = 282.1, RNPU = 2.3E+06, CNWP = 0.5267

η = 0.93		0.76		0.59		0.40	
			Upper Surface				
x/c	CP	*x/c*	CP	*x/c*	CP	*x/c*	CP
0.020	-0.343	0.000	0.876**	0.000	-6.194**	0.010	-0.969
0.060	-0.553	0.020	-0.782	0.020	-0.568	0.020	-1.016
0.110	-0.658	0.040	-0.472	0.060	-1.185**	0.060	-1.089
0.200	-1.036	0.060	-0.781	0.090	-0.969	0.110	-1.246
0.230	-0.920	0.090	-0.878	0.110	-1.097	0.140	2.072**
0.400	-0.273	0.130	-0.979	0.130	-1.127	0.190	-6.053**
0.490	-0.245	0.150	-1.093	0.150	-1.154	0.250	-1.380
0.590	-0.354	0.200	-1.065	0.210	-1.266	0.400	-0.698
0.630	-0.392	0.250	-1.218	0.250	-1.225	0.490	-0.518
0.700	-0.430	0.260	-1.113	0.340	-1.266	0.580	-0.457
0.750	-1.094	0.280	-1.196	0.370	-1.222	0.650	-0.485
0.810	-1.141	0.290	-1.212	0.400	-1.206	0.700	-0.540
0.840	-1.101	0.310	-1.105	0.410	-1.199	0.750	-0.646
0.900	-0.402	0.320	-1.103	0.430	-1.261	0.800	-0.612
0.960	-0.457	0.340	-1.164	0.440	-1.040	0.830	-0.605
		0.350	-0.433**	0.460	-0.742	0.900	-0.218
		0.370	-1.093	0.490	-0.555	0.960	-0.164
		0.380	-1.127	0.500	-0.557		
		0.400	-1.047	0.520	-0.493		
		0.410	-1.142	0.540	-0.463		
		0.430	-1.119	0.550	-0.404		
		0.440	-0.963	0.580	-0.357		
		0.460	-0.733	0.600	-0.367		
		0.470	-0.508	0.610	-0.253		
		0.490	-0.424	0.650	-3.156**		
		0.500	-0.369	0.700	-0.459		
		0.520	-0.339	0.750	-0.544		
		0.530	-0.264	0.820	-0.653		
		0.550	-0.251	0.890	-0.182		
		0.560	-0.258	0.900	-0.175		
		0.580	-0.223	0.960	-0.183		
		0.590	-0.273				
		0.600	-0.320				
		0.640	-2.985**				
		0.700	-0.475				
		0.750	-0.872				
		0.820	-3.169**				
		0.870	-0.474				
		0.930	-0.254				
		0.960	-0.232				
			Lower Surface				
0.020	-0.066	0.020	0.142	0.020	0.186	0.020	0.498**
0.110	0.011	0.060	0.261	0.060	0.355	0.060	6.735**
0.230	0.152	0.090	0.170	0.090	0.207	0.110	0.127
0.400	0.074	0.120	0.165	0.120	-0.131	0.250	0.054
0.490	0.062	0.200	0.172	0.200	0.090	0.400	0.055
0.630	4.416**	0.260	0.074	0.250	0.125	0.490	-0.001
0.750	0.172	0.400	-3.188**	0.400	0.078	0.580	0.035
0.850	0.231	0.490	0.080	0.490	0.080	0.650	0.195
0.900	0.285	0.580	0.169	0.580	0.113	0.750	0.421
0.960	0.091	0.640	0.521	0.650	0.317	0.830	0.499
		0.750	0.343	0.750	0.105	0.900	0.582
		0.870	0.408	0.890	********	0.960	0.385
		0.930	0.353	0.930	0.430		
		0.960	0.193	0.960	-3.186**		
CN =	0.688		0.905		0.866		0.914

Table E-2. Continued.

Flight 195, Wing sweep = 26°, Time = 10-14-6-000, MINF = 0.798, Camber = 5/10, ALPT = 9.00, BETA = -0.01, QINF = 284.3, RNPU = 2.3E+06, CNWP = 0.6346

η = 0.93		0.76		0.59		0.40	
			Upper Surface				
x/c	CP	*x/c*	CP	*x/c*	CP	*x/c*	CP
0.020	-0.520	0.000	0.833**	0.000	-6.150**	0.010	-0.994
0.060	-0.625	0.020	-0.882	0.020	-0.836	0.020	-1.086
0.110	-0.774	0.040	-0.535	0.060	-1.151**	0.060	-1.203
0.200	-1.043	0.060	-0.830	0.090	-1.039	0.110	-1.329
0.230	-0.961	0.090	-0.952	0.110	-1.181	0.140	2.048**
0.400	-0.851	0.130	-1.086	0.130	-1.209	0.190	-6.011**
0.490	-0.294	0.150	-1.171	0.150	-1.221	0.250	-1.442
0.590	-0.344	0.200	-1.159	0.210	-1.329	0.400	-0.935
0.630	-0.402	0.250	-1.278	0.250	-1.295	0.490	-0.737
0.700	-0.435	0.260	-1.187	0.340	-1.359	0.580	-0.598
0.750	-1.079	0.280	-1.279	0.370	-1.318	0.650	-0.512
0.810	-1.146	0.290	-1.272	0.400	-1.277	0.700	-0.569
0.840	-1.144	0.310	-1.189	0.410	-1.266	0.750	-0.622
0.900	-0.482	0.320	-1.182	0.430	-1.338	0.800	-0.475
0.960	-0.545	0.340	-1.254	0.440	-1.282	0.830	-0.412
		0.350	-0.409**	0.460	-1.314	0.900	-0.199
		0.370	-1.172	0.490	-1.198	0.960	-0.152
		0.380	-1.182	0.500	-1.318		
		0.400	-1.142	0.520	-1.298		
		0.410	-1.228	0.540	-1.197		
		0.430	-1.199	0.550	-0.834		
		0.440	-1.106	0.580	-0.679		
		0.460	-1.305	0.600	-0.661		
		0.470	-1.206	0.610	-0.535		
		0.490	-1.148	0.650	-3.136**		
		0.500	-1.167	0.700	-0.471		
		0.520	-1.144	0.750	-0.513		
		0.530	-1.060	0.820	-0.441		
		0.550	-0.708	0.890	-0.136		
		0.560	-0.586	0.900	-0.130		
		0.580	-0.502	0.960	-0.128		
		0.590	-0.479				
		0.600	-0.461				
		0.640	-2.966**				
		0.700	-0.387				
		0.750	-0.831				
		0.820	-3.149**				
		0.870	-0.369				
		0.930	-0.183				
		0.960	-0.130				
			Lower Surface				
0.020	0.031	0.020	0.258	0.020	0.279	0.020	0.573**
0.110	0.043	0.060	0.317	0.060	0.364	0.060	6.679**
0.230	0.186	0.090	0.217	0.090	0.259	0.110	0.180
0.400	0.081	0.120	0.186	0.120	-0.082	0.250	0.086
0.490	0.065	0.200	0.209	0.200	0.104	0.400	0.082
0.630	4.377**	0.260	0.115	0.250	0.159	0.490	0.026
0.750	0.153	0.400	-3.167**	0.400	0.093	0.580	0.057
0.850	0.212	0.490	0.102	0.490	0.090	0.650	0.204
0.900	0.281	0.580	0.187	0.580	0.135	0.750	0.434
0.960	0.078	0.640	0.534	0.650	0.330	0.830	0.515
		0.750	0.342	0.750	0.112	0.900	0.604
		0.870	0.425	0.890	********	0.960	0.393
		0.930	0.393	0.930	0.454		
		0.960	0.237	0.960	-3.166**		
CN =	0.799		1.026		0.995		1.002

Table E-2. Continued.

Flight 195, Wing sweep = 26°, Time = 10-14-10-500, MINF = 0.798, Camber = 5/10, ALPT = 10.22, BETA = -0.16, QINF = 286.9, RNPU = 2.4E+06, CNWP = 0.7158

η = 0.93		0.76		0.59		0.40	
			Upper Surface				
x/c	CP	*x/c*	CP	*x/c*	CP	*x/c*	CP
0.020	-0.892	0.000	0.765**	0.000	-6.113**	0.010	-1.224
0.060	-0.853	0.020	-1.209	0.020	-1.034	0.020	-1.249
0.110	-0.860	0.040	-0.822	0.060	-1.261**	0.060	-1.321
0.200	-1.188	0.060	-0.973	0.090	-1.146	0.110	-1.415
0.230	-1.004	0.090	-1.044	0.110	-1.293	0.140	2.048**
0.400	-0.982	0.130	-1.155	0.130	-1.324	0.190	-5.974**
0.490	-0.536	0.150	-1.258	0.150	-1.297	0.250	-1.580
0.590	-0.295	0.200	-1.248	0.210	-1.414	0.400	-1.065
0.630	-0.377	0.250	-1.371	0.250	-1.363	0.490	-0.948
0.700	-0.416	0.260	-1.257	0.340	-1.434	0.580	-0.759
0.750	-1.047	0.280	-1.344	0.370	-1.395	0.650	-0.523
0.810	-1.101	0.290	-1.365	0.400	-1.308	0.700	-0.527
0.840	-1.103	0.310	-1.256	0.410	-1.359	0.750	-0.469
0.900	-0.559	0.320	-1.252	0.430	-1.412	0.800	-0.424
0.960	-0.595	0.340	-1.333	0.440	-1.387	0.830	-0.392
		0.350	-0.421**	0.460	-1.408	0.900	-0.168
		0.370	-1.260	0.490	-1.275	0.960	-0.114
		0.380	-1.294	0.500	-1.381		
		0.400	-1.219	0.520	-1.368		
		0.410	-1.319	0.540	-0.985		
		0.430	-1.299	0.550	-0.839		
		0.440	-1.190	0.580	-0.736		
		0.460	-1.386	0.600	-0.719		
		0.470	-1.291	0.610	-0.592		
		0.490	-1.212	0.650	-3.126**		
		0.500	-1.153	0.700	-0.560		
		0.520	-1.123	0.750	-0.581		
		0.530	-0.802	0.820	-0.381		
		0.550	-0.722	0.890	-0.238		
		0.560	-0.653	0.900	-0.254		
		0.580	-0.623	0.960	-0.239		
		0.590	-0.616				
		0.600	-0.589				
		0.640	-2.958**				
		0.700	-0.388				
		0.750	-0.499				
		0.820	-3.139**				
		0.870	-0.161				
		0.930	-0.182				
		0.960	-0.172				
			Lower Surface				
0.020	0.106	0.020	0.398	0.020	0.432	0.020	0.653**
0.110	0.081	0.060	0.390	0.060	0.469	0.060	6.596**
0.230	0.238	0.090	0.296	0.090	0.333	0.110	0.257
0.400	0.098	0.120	0.265	0.120	-0.002	0.250	0.152
0.490	0.083	0.200	0.267	0.200	0.164	0.400	0.130
0.630	4.316**	0.260	0.154	0.250	0.218	0.490	0.067
0.750	0.178	0.400	-3.157**	0.400	0.134	0.580	0.093
0.850	0.224	0.490	0.112	0.490	0.108	0.650	0.236
0.900	0.274	0.580	0.203	0.580	0.144	0.750	0.450
0.960	0.075	0.640	0.542	0.650	0.345	0.830	0.512
		0.750	0.347	0.750	0.121	0.900	0.609
		0.870	0.423	0.890	********	0.960	0.394
		0.930	0.361	0.930	0.436		
		0.960	0.207	0.960	-3.156**		
CN =	0.895		1.057		1.089		1.103

Table E-2. Continued.

Flight 224, Wing sweep = 26°, Time = 10-1-11-500, MINF = 0.798, Camber = 5/10, ALPT = 3.06, BETA = -0.07, QINF = 296.9, RNPU = 2.4E+06, CNWP = 0.2403

η = 0.93		0.76		0.59		0.40	
			Upper Surface				
x/c	CP	*x/c*	CP	*x/c*	CP	*x/c*	CP
0.020	0.348	0.000	0.475	0.000	4.229**	0.010	0.031
0.060	-0.038	0.020	0.126	0.020	0.292	0.020	0.028
0.110	-0.271	0.040	0.135	0.060	-5.217**	0.060	-0.323
0.200	-0.264	0.060	-0.128	0.090	-0.260	0.110	-0.524
0.230	-0.236	0.090	-0.237	0.110	-0.482	0.140	-0.827
0.400	-0.217	0.130	-0.392	0.130	-0.638	0.190	-2.246**
0.490	-0.203	0.150	-0.562	0.150	-0.507	0.250	-0.324
0.590	-0.319	0.200	-0.427	0.210	-0.467	0.400	-0.329
0.630	-0.323	0.250	-0.366	0.250	-0.299	0.490	-0.302
0.700	-0.370	0.260	-0.321	0.340	-0.361	0.580	-0.329
0.750	-0.811	0.280	-0.344	0.370	-0.356	0.650	-0.451
0.810	-0.804	0.290	-0.326	0.400	-0.349	0.700	-0.422
0.840	-0.804	0.310	-0.353	0.410	-3.252**	0.750	-0.498
0.900	-0.204	0.320	-0.326	0.430	-0.363	0.800	-1.064
0.960	-0.181	0.340	-0.330	0.440	-0.334	0.830	-0.580
		0.350	-0.242**	0.460	-0.358	0.900	-0.404
		0.370	-0.281	0.490	-0.364	0.960	-0.404
		0.380	-0.337	0.500	-0.386		
		0.400	-0.242	0.520	-0.346		
		0.410	-0.334	0.540	-0.340		
		0.430	-0.306	0.550	-0.317		
		0.440	-0.274	0.580	-0.288		
		0.460	-0.336	0.600	-0.364		
		0.470	-0.325	0.610	-0.409		
		0.490	-0.316	0.650	2.845**		
		0.500	-0.313	0.700	-0.625		
		0.520	-0.330	0.750	-0.588		
		0.530	-0.313	0.820	-0.660		
		0.550	-0.371	0.890	-0.296		
		0.560	-0.352	0.900	-0.325		
		0.580	-0.351	0.960	-0.260		
		0.590	-0.383				
		0.600	-0.391				
		0.640	-0.562				
		0.700	-0.477				
		0.750	-0.016**				
		0.820	-0.561				
		0.870	-0.306				
		0.930	-0.282				
		0.960	-0.281				
			Lower Surface				
0.020	-1.065	0.020	-1.311	0.020	-1.172	0.020	-0.366
0.110	-0.175	0.060	-0.310	0.060	-0.170	0.060	2.553**
0.230	-0.062	0.090	-0.249	0.090	1.846**	0.110	-0.162
0.400	0.001	0.120	-0.136	0.120	-0.414	0.250	-0.214
0.490	0.047	0.200	-0.073	0.200	-0.116	0.400	-0.166
0.630	2.613**	0.260	-0.116	0.250	-0.137	0.490	-0.169
0.750	0.158	0.400	-0.030	0.400	-0.093	0.580	-0.096
0.850	0.256	0.490	-0.014	0.490	0.002	0.650	0.115
0.900	0.313	0.580	0.040	0.580	0.023	0.750	0.298
0.960	0.179	0.640	0.251	0.650	-0.027	0.830	0.436
		0.750	0.298	0.750	0.032	0.900	0.484
		0.870	0.381	0.890	0.424	0.960	0.337
		0.930	0.283	0.930	0.335		
		0.960	0.199	0.960	-3.340**		
CN =	0.360		0.413		0.376		0.444

Table E-2. Continued.

Flight 224, Wing sweep = 26°, Time = 10-1-36-500, MINF = 0.800, Camber = 5/11, ALPT = 8.07, BETA = -0.27, QINF = 295.0, RNPU = 2.4E+06, CNWP = 0.5238

η = 0.93		0.76		0.59		0.40	
			Upper Surface				
x/c	CP	*x/c*	CP	*x/c*	CP	*x/c*	CP
0.020	-0.347	0.000	0.847	0.000	4.284**	0.010	-0.847
0.060	-0.501	0.020	-0.706	0.020	-0.573	0.020	-0.953
0.110	-0.658	0.040	-0.503	0.060	-5.225**	0.060	-0.991
0.200	-0.978	0.060	-0.733	0.090	-0.904	0.110	-1.133
0.230	-0.842	0.090	-0.813	0.110	-1.042	0.140	-1.319
0.400	-0.368	0.130	-0.914	0.130	-1.090	0.190	-2.234**
0.490	-0.230	0.150	-1.057	0.150	-1.181	0.250	-1.300
0.590	-0.335	0.200	-1.055	0.210	-1.177	0.400	-0.834
0.630	-0.373	0.250	-1.176	0.250	-1.135	0.490	-0.534
0.700	-0.404	0.260	-1.101	0.340	-1.217	0.580	-0.461
0.750	-1.096	0.280	-1.161	0.370	-1.218	0.650	-0.526
0.810	-1.043	0.290	-1.148	0.400	-1.173	0.700	-0.546
0.840	-1.066	0.310	-1.115	0.410	-3.247**	0.750	-0.615
0.900	-0.452	0.320	-1.099	0.430	-1.209	0.800	-0.582
0.960	-0.456	0.340	-1.119	0.440	-1.181	0.830	-0.508
		0.350	-0.468**	0.460	-1.204	0.900	-0.215
		0.370	-1.062	0.490	-1.022	0.960	-0.193
		0.380	-1.175	0.500	-0.799		
		0.400	-1.041	0.520	-0.645		
		0.410	-1.134	0.540	-0.589		
		0.430	-1.097	0.550	-0.496		
		0.440	-1.041	0.580	-0.411		
		0.460	-1.139	0.600	-0.416		
		0.470	-1.098	0.610	-0.381		
		0.490	-1.036	0.650	2.891**		
		0.500	-0.652	0.700	-0.450		
		0.520	-0.543	0.750	-0.532		
		0.530	-0.410	0.820	-0.639		
		0.550	-0.403	0.890	-0.165		
		0.560	-0.320	0.900	-0.148		
		0.580	-0.282	0.960	-0.107		
		0.590	-0.291				
		0.600	-0.277				
		0.640	-0.345				
		0.700	-0.434				
		0.750	0.045**				
		0.820	-0.550				
		0.870	-0.432				
		0.930	-0.264				
		0.960	-0.248				
			Lower Surface				
0.020	-0.076	0.020	0.140	0.020	0.269	0.020	0.507
0.110	0.015	0.060	0.241	0.060	0.314	0.060	2.597**
0.230	0.129	0.090	0.150	0.090	1.886**	0.110	0.202
0.400	0.069	0.120	0.165	0.120	-0.055	0.250	0.056
0.490	0.164	0.200	0.128	0.200	0.054	0.400	0.038
0.630	2.658**	0.260	0.091	0.250	0.127	0.490	0.005
0.750	0.177	0.400	0.096	0.400	0.074	0.580	0.032
0.850	0.248	0.490	0.078	0.490	0.059	0.650	0.195
0.900	0.288	0.580	0.128	0.580	0.125	0.750	0.391
0.960	0.097	0.640	0.325	0.650	0.022	0.830	0.528
		0.750	0.389	0.750	0.089	0.900	0.559
		0.870	0.461	0.890	0.492	0.960	0.390
		0.930	0.342	0.930	0.413		
		0.960	0.239	0.960	-3.335**		
CN =	0.690		0.902		0.858		0.927

Table E-2. Continued.

Flight 211, Wing sweep 26°, TIME = 10-48-54-500, MINF = 0.803, Camber = 5/10, ALPT = 4.10, BETA = 0.25, QINF = 302.9, RNPU = 2.5E+06, CNWP = 0.3075

η = 0.93		0.76		0.59		0.40	
			Upper Surface				
x/c	CP	*x/c*	CP	*x/c*	CP	*x/c*	CP
0.020	0.315	0.000	0.607	0.000	0.859**	0.010	-0.224
0.060	-0.073	0.020	0.228	0.020	0.135	0.020	-0.185
0.110	-0.305	0.040	0.096	0.060	1.038**	0.060	-0.551
0.200	-0.331	0.060	-0.188	0.090	-0.405	0.110	-0.581
0.230	-0.349	0.090	-0.341	0.110	-0.530	0.140	-0.955
0.400	-0.254	0.130	-0.537	0.130	-2.216**	0.190	-2.216**
0.490	-0.239	0.150	-0.722	0.150	-0.825	0.250	-0.434
0.590	-0.317	0.200	-0.720	0.210	-0.829	0.400	-0.390
0.630	-0.363	0.250	-0.369	0.250	-0.386	0.490	-0.346
0.700	-0.430	0.260	-0.387	0.340	-0.406	0.580	-0.366
0.750	-0.708	0.280	-0.383	0.370	-0.420	0.650	-0.483
0.810	-0.674	0.290	-0.374	0.400	-0.364	0.700	-0.440
0.840	-0.759	0.310	-0.367	0.410	0.181**	0.750	-0.531
0.900	-0.248	0.320	-0.387	0.430	-0.400	0.800	-0.787
0.960	-0.211	0.340	-0.368	0.440	-0.404	0.830	-0.563
		0.350	-0.145**	0.460	-0.386	0.900	-0.402
		0.370	-0.358	0.490	-0.372	0.960	-0.397
		0.380	-0.375	0.500	-0.391		
		0.400	-0.327	0.520	-0.402		
		0.410	-0.348	0.540	-0.386		
		0.430	-0.331	0.550	-0.366		
		0.440	-0.322	0.580	-0.346		
		0.460	-0.344	0.600	-0.399		
		0.470	-0.366	0.610	-0.412		
		0.490	-0.347	0.650	-0.598		
		0.500	-0.346	0.700	-0.638		
		0.520	-0.340	0.750	-0.573		
		0.530	-0.352	0.820	-0.647		
		0.550	-0.379	0.890	-0.293		
		0.560	-0.390	0.900	-0.353		
		0.580	-0.348	0.960	-0.270		
		0.590	-0.403				
		0.600	-0.383				
		0.640	-0.619				
		0.700	-0.551				
		0.750	-0.014**				
		0.820	-0.573				
		0.870	-0.411				
		0.930	-0.294				
		0.960	-0.297				
			Lower Surface				
0.020	-0.729	0.020	-0.643	0.020	-0.780	0.020	-0.149
0.110	-0.164	0.060	-0.107	0.060	-0.111	0.060	0.019
0.230	-0.027	0.090	-0.137	0.090	-0.107	0.110	-0.124
0.400	-0.003	0.120	-0.097	0.120	-0.112	0.250	-0.195
0.490	0.038	0.200	-0.024	0.200	-0.005	0.400	-0.162
0.630	3.524**	0.260	-0.052	0.250	-0.123	0.490	-0.128
0.750	0.166	0.400	-0.033	0.400	-0.076	0.580	-0.089
0.850	0.194	0.490	0.001	0.490	-0.027	0.650	0.105
0.900	0.288	0.580	0.038	0.580	-0.006	0.750	0.331
0.960	0.136	0.640	0.257	0.650	-0.033	0.830	0.414
		0.750	0.313	0.750	0.013	0.900	0.480
		0.870	0.389	0.890	0.463	0.960	0.322
		0.930	0.314	0.930	0.368		
		0.960	0.199	0.960	0.232		
CN =	0.382		0.503		0.479		0.511

Table E-2. Continued.

Flight 224, Wing sweep = 26°, Time = 10-2-44-000, MINF = 0.800, Camber = 10/2, ALPT = 5.02, BETA = -0.59, QINF = 294.7, RNPU = 2.4E+06, CNWP = 0.2869

η = 0.93		0.76		0.59		0.40	
			Upper Surface				
x/c	CP	*x/c*	CP	*x/c*	CP	*x/c*	CP
0.020	0.473	0.000	0.142	0.000	4.290**	0.010	0.334
0.060	-0.021	0.020	0.342	0.020	0.474	0.020	0.173
0.110	-0.363	0.040	0.227	0.060	-5.228**	0.060	-0.350
0.200	-0.581	0.060	-0.144	0.090	-0.335	0.110	-0.693
0.230	-0.216	0.090	-0.322	0.110	-0.637	0.140	-1.136
0.400	-0.212	0.130	-0.592	0.130	-0.893	0.190	-2.234**
0.490	-0.198	0.150	-0.931	0.150	-1.106	0.250	-0.585
0.590	-0.243	0.200	-0.988	0.210	-1.049	0.400	-0.319
0.630	-0.238	0.250	-0.751	0.250	-0.865	0.490	-0.312
0.700	-0.208	0.260	-0.445	0.340	-0.310	0.580	-0.299
0.750	-0.251	0.280	-0.366	0.370	-0.349	0.650	-0.377
0.810	-0.251	0.290	-0.306	0.400	-0.323	0.700	-0.361
0.840	-0.198	0.310	-0.297	0.410	-3.247**	0.750	-0.385
0.900	-0.127	0.320	-0.277	0.430	-0.335	0.800	-0.380
0.960	-0.029	0.340	-0.257	0.440	-0.319	0.830	-0.319
		0.350	-0.237**	0.460	-0.345	0.900	-0.209
		0.370	-0.269	0.490	-0.252	0.960	-0.033
		0.380	-0.319	0.500	-0.343		
		0.400	-0.215	0.520	-0.305		
		0.410	-0.315	0.540	-0.304		
		0.430	-0.292	0.550	-0.281		
		0.440	-0.239	0.580	-0.250		
		0.460	-0.294	0.600	-0.309		
		0.470	-0.286	0.610	-0.333		
		0.490	-0.301	0.650	2.896**		
		0.500	-0.306	0.700	-0.370		
		0.520	-0.316	0.750	-0.444		
		0.530	-0.278	0.820	-0.348		
		0.550	-0.349	0.890	-0.123		
		0.560	-0.295	0.900	-0.074		
		0.580	-0.282	0.960	0.044		
		0.590	-0.335				
		0.600	-0.350				
		0.640	-0.364				
		0.700	-0.344				
		0.750	-0.028**				
		0.820	-0.271				
		0.870	-0.213				
		0.930	-0.116				
		0.960	-0.034				
			Lower Surface				
0.020	-0.774	0.020	-0.804	0.020	-0.626	0.020	-0.740
0.110	-0.459	0.060	-0.565	0.060	-0.375	0.060	2.601**
0.230	-0.082	0.090	-0.386	0.090	1.889**	0.110	-0.065
0.400	-0.004	0.120	-0.086	0.120	-0.346	0.250	-0.153
0.490	0.009	0.200	-0.093	0.200	-0.155	0.400	-0.183
0.630	2.662**	0.260	-0.063	0.250	-0.065	0.490	-0.246
0.750	0.027	0.400	-0.080	0.400	-0.160	0.580	-0.280
0.850	0.121	0.490	-0.114	0.490	-0.022	0.650	-0.120
0.900	0.152	0.580	-0.093	0.580	-0.156	0.750	0.110
0.960	0.138	0.640	0.065	0.650	-0.029	0.830	0.283
		0.750	0.184	0.750	-0.022	0.900	0.310
		0.870	0.232	0.890	0.264	0.960	0.272
		0.930	0.180	0.930	0.220		
		0.960	0.147	0.960	-3.336**		
CN =	0.175		0.306		0.323		0.348

Table E-2. Continued.

Flight 224, Wing sweep = 26°, Time = 10-2-52-500, MINF = 0.805, Camber = 10/2, ALPT = 10.29, BETA = -0.12, QINF = 298.1, RNPU = 2.4E+06, CNWP = 0.3961

η = 0.93		0.76		0.59		0.40	
			Upper Surface				
x/c	CP	*x/c*	CP	*x/c*	CP	*x/c*	CP
0.020	0.101	0.000	0.770	0.000	4.247**	0.010	-0.401
0.060	-0.397	0.020	-0.160	0.020	-0.090	0.020	-0.324
0.110	-0.634	0.040	-0.200	0.060	-5.163**	0.060	-0.907
0.200	-1.212	0.060	-0.560	0.090	-0.836	0.110	-1.228
0.230	-1.127	0.090	-0.752	0.110	-1.039	0.140	-1.498
0.400	-0.432	0.130	-0.924	0.130	-1.229	0.190	-2.203**
0.490	-0.261	0.150	-1.172	0.150	-1.382	0.250	-1.526
0.590	-0.291	0.200	-1.260	0.210	-1.086	0.400	-0.954
0.630	-0.279	0.250	-1.094	0.250	-0.769	0.490	-0.363
0.700	-0.224	0.260	-0.828	0.340	-0.757	0.580	-0.214
0.750	-0.257	0.280	-0.890	0.370	-0.752	0.650	-0.267
0.810	-0.270	0.290	-0.820	0.400	-0.708	0.700	-0.249
0.840	-0.243	0.310	-0.796	0.410	-3.205**	0.750	-0.243
0.900	-0.174	0.320	-0.765	0.430	-0.674	0.800	-0.285
0.960	-0.090	0.340	-0.741	0.440	-0.640	0.830	-0.217
		0.350	-0.393**	0.460	-0.659	0.900	-0.148
		0.370	-0.684	0.490	-0.593	0.960	-0.064
		0.380	-0.770	0.500	-0.644		
		0.400	-0.608	0.520	-0.614		
		0.410	-0.698	0.540	-0.594		
		0.430	-0.661	0.550	-0.555		
		0.440	-0.601	0.580	-0.529		
		0.460	-0.653	0.600	-0.537		
		0.470	-0.611	0.610	-0.538		
		0.490	-0.590	0.650	2.868**		
		0.500	-0.566	0.700	-0.482		
		0.520	-0.567	0.750	-0.534		
		0.530	-0.505	0.820	-0.390		
		0.550	-0.551	0.890	-0.296		
		0.560	-0.506	0.900	-0.273		
		0.580	-0.479	0.960	-0.204		
		0.590	-0.496				
		0.600	-0.469				
		0.640	-0.351				
		0.700	-0.338				
		0.750	0.004**				
		0.820	-0.188				
		0.870	-0.175				
		0.930	-0.187				
		0.960	-0.179				
			Lower Surface				
0.020	-0.177	0.020	0.033	0.020	0.167	0.020	0.377
0.110	0.025	0.060	0.235	0.060	0.338	0.060	2.577**
0.230	0.045	0.090	0.172	0.090	1.873**	0.110	0.270
0.400	0.012	0.120	0.199	0.120	-0.010	0.250	0.100
0.490	-0.002	0.200	0.046	0.200	0.032	0.400	0.018
0.630	2.637**	0.260	0.111	0.250	0.140	0.490	-0.074
0.750	-0.009	0.400	0.024	0.400	0.011	0.580	-0.137
0.850	0.062	0.490	-0.055	0.490	0.009	0.650	-0.039
0.900	0.115	0.580	-0.073	0.580	-0.068	0.750	0.138
0.960	0.099	0.640	0.065	0.650	-0.031	0.830	0.317
		0.750	0.183	0.750	0.013	0.900	0.317
		0.870	0.218	0.890	0.231	0.960	0.233
		0.930	0.140	0.930	0.170		
		0.960	0.085	0.960	-3.293**		
CN =	0.459		0.632		0.675		0.758

Table E-2. Continued.

Flight 216, Wing sweep = 26°, Time = 10-16-42-500, MINF = 0.801, Camber = 10/2, ALPT = 6.03, BETA = -0.01, QINF = 303.1, RNPU = 2.5E+06, CNWP = 0.3208

η = 0.93		0.76		0.59		0.40	
			Upper Surface				
x/c	CP	*x/c*	CP	*x/c*	CP	*x/c*	CP
0.020	0.434	0.000	0.331	0.000	0.529**	0.010	0.120
0.060	-0.092	0.020	0.340	0.020	0.373	0.020	0.004
0.110	-0.434	0.040	0.221	0.060	-0.012**	0.060	-0.588
0.200	-1.144	0.060	-0.226	0.090	-0.464	0.110	-0.910
0.230	-1.026	0.090	-0.426	0.110	-0.711	0.140	-1.292
0.400	-0.207	0.130	-0.672	0.130	-2.224**	0.190	-2.224**
0.490	-0.205	0.150	-0.992	0.150	-1.137	0.250	-0.965
0.590	-0.253	0.200	-1.095	0.210	-1.142	0.400	-0.401
0.630	-0.252	0.250	-1.123	0.250	-1.130	0.490	-0.338
0.700	-0.226	0.260	-1.077	0.340	-0.638	0.580	-0.331
0.750	-0.249	0.280	-1.102	0.370	-0.473	0.650	-0.380
0.810	-0.229	0.290	-1.076	0.400	-0.344	0.700	-0.375
0.840	-0.230	0.310	-1.028	0.410	-3.210**	0.750	-0.389
0.900	-0.147	0.320	-1.048	0.430	-0.305	0.800	-0.356
0.960	-0.035	0.340	-0.555	0.440	-0.269	0.830	-0.304
		0.350	-0.267**	0.460	-0.270	0.900	-0.164
		0.370	-0.356	0.490	-0.231	0.960	0.005
		0.380	-0.326	0.500	-0.304		
		0.400	-0.235	0.520	-0.290		
		0.410	-0.239	0.540	-0.289		
		0.430	-0.197	0.550	-0.283		
		0.440	-0.195	0.580	-0.288		
		0.460	-0.211	0.600	-0.306		
		0.470	-0.231	0.610	-0.317		
		0.490	-0.240	0.650	-0.475		
		0.500	-0.244	0.700	-0.364		
		0.520	-0.247	0.750	-0.392		
		0.530	-0.256	0.820	-0.319		
		0.550	-0.291	0.890	-0.124		
		0.560	-0.293	0.900	-0.097		
		0.580	-0.267	0.960	0.039		
		0.590	-0.309				
		0.600	-0.309				
		0.640	-0.346				
		0.700	-0.324				
		0.750	-0.024**				
		0.820	-0.272				
		0.870	-0.225				
		0.930	-0.106				
		0.960	-0.030				
			Lower Surface				
0.020	-1.086	0.020	-0.684	0.020	-0.587	0.020	-0.292
0.110	-0.149	0.060	-0.201	0.060	-0.007	0.060	-0.016
0.230	-0.051	0.090	-0.106	0.090	-0.018	0.110	-0.062
0.400	-0.034	0.120	-0.034	0.120	-0.196	0.250	-0.106
0.490	-0.022	0.200	-0.051	0.200	-0.076	0.400	-0.150
0.630	4.037**	0.260	-0.026	0.250	-0.042	0.490	-0.196
0.750	0.017	0.400	-0.064	0.400	-0.114	0.580	-0.226
0.850	0.064	0.490	-0.094	0.490	-0.044	0.650	-0.103
0.900	0.158	0.580	-0.103	0.580	-0.159	0.750	0.132
0.960	0.123	0.640	0.047	0.650	-0.036	0.830	0.276
		0.750	0.169	0.750	-0.029	0.900	0.317
		0.870	0.214	0.890	0.292	0.960	0.254
		0.930	0.207	0.930	0.242		
		0.960	0.164	0.960	0.304		
CN =	0.325		0.418		0.436		0.466

Table E-2. Continued.

Flight 216, Wing sweep = 26°, Time = 10-17-12-500, MINF = 0.808, Camber = 10/2, ALPT = 4.04, BETA = -0.12, QINF = 304.4, RNPU = 2.5E+06, CNWP = 0.2316

η = 0.93		0.76		0.59		0.40	
			Upper Surface				
x/c	CP	*x/c*	CP	*x/c*	CP	*x/c*	CP
0.020	0.560	0.000	0.104	0.000	0.377**	0.010	0.332
0.060	0.024	0.020	0.464	0.020	0.547	0.020	0.215
0.110	-0.312	0.040	0.374	0.060	0.153**	0.060	-0.323
0.200	-0.471	0.060	-0.047	0.090	-0.323	0.110	-0.683
0.230	-0.229	0.090	-0.297	0.110	-0.570	0.140	-1.151
0.400	-0.218	0.130	-0.571	0.130	-2.190**	0.190	-2.190**
0.490	-0.197	0.150	-0.861	0.150	-1.013	0.250	-0.466
0.590	-0.237	0.200	-0.946	0.210	-0.986	0.400	-0.348
0.630	-0.248	0.250	-0.433	0.250	-0.506	0.490	-0.322
0.700	-0.218	0.260	-0.318	0.340	-0.328	0.580	-0.314
0.750	-0.230	0.280	-0.320	0.370	-0.330	0.650	-0.393
0.810	-0.219	0.290	-0.303	0.400	-0.332	0.700	-0.368
0.840	-0.219	0.310	-0.304	0.410	-3.171**	0.750	-0.407
0.900	-0.126	0.320	-0.310	0.430	-0.352	0.800	-0.387
0.960	-0.022	0.340	-0.305	0.440	-0.323	0.830	-0.325
		0.350	-0.197**	0.460	-0.333	0.900	-0.218
		0.370	-0.302	0.490	-0.279	0.960	-0.015
		0.380	-0.329	0.500	-0.344		
		0.400	-0.271	0.520	-0.326		
		0.410	-0.318	0.540	-0.326		
		0.430	-0.269	0.550	-0.310		
		0.440	-0.263	0.580	-0.309		
		0.460	-0.297	0.600	-0.333		
		0.470	-0.296	0.610	-0.347		
		0.490	-0.302	0.650	-0.498		
		0.500	-0.312	0.700	-0.396		
		0.520	-0.282	0.750	-0.406		
		0.530	-0.298	0.820	-0.329		
		0.550	-0.339	0.890	-0.132		
		0.560	-0.327	0.900	-0.098		
		0.580	-0.291	0.960	0.035		
		0.590	-0.334				
		0.600	-0.346				
		0.640	-0.366				
		0.700	-0.338				
		0.750	-0.036**				
		0.820	-0.257				
		0.870	-0.222				
		0.930	-0.099				
		0.960	-0.035				
			Lower Surface				
0.020	-0.830	0.020	-1.127	0.020	-0.927	0.020	-1.016
0.110	-0.558	0.060	-0.564	0.060	-0.563	0.060	-0.024
0.230	-0.088	0.090	-0.408	0.090	-0.359	0.110	-0.271
0.400	-0.053	0.120	-0.268	0.120	-0.415	0.250	-0.222
0.490	-0.012	0.200	-0.088	0.200	-0.087	0.400	-0.261
0.630	4.044**	0.260	-0.144	0.250	-0.140	0.490	-0.295
0.750	0.027	0.400	-0.124	0.400	-0.186	0.580	-0.299
0.850	0.067	0.490	-0.120	0.490	-0.062	0.650	-0.158
0.900	0.140	0.580	-0.107	0.580	-0.184	0.750	0.104
0.960	0.122	0.640	0.031	0.650	-0.055	0.830	0.251
		0.750	0.123	0.750	-0.019	0.900	0.308
		0.870	0.164	0.890	0.251	0.960	0.243
		0.930	0.173	0.930	0.215		
		0.960	0.137	0.960	0.298		
CN =	0.134		0.241		0.276		0.291

Table E-2. Continued.

Flight 216, Wing sweep = 26°, Time = 10-27-5-500, MINF = 0.806, Camber = 10/2, ALPT = 7.17, BETA = -0.47, QINF = 307.6, RNPU = 2.5E+06, CNWP = 0.3778

η = 0.93		0.76		0.59		0.40	
			Upper Surface				
x/c	CP	*x/c*	CP	*x/c*	CP	*x/c*	CP
0.020	0.351	0.000	0.456	0.000	0.501**	0.010	-0.082
0.060	-0.138	0.020	0.180	0.020	0.251	0.020	-0.064
0.110	-0.465	0.040	0.146	0.060	0.095**	0.060	-0.729
0.200	-1.169	0.060	-0.335	0.090	-0.541	0.110	-1.056
0.230	-1.076	0.090	-0.498	0.110	-0.787	0.140	-1.384
0.400	-0.174	0.130	-0.764	0.130	-2.198**	0.190	-2.198**
0.490	-0.173	0.150	-1.047	0.150	-1.185	0.250	-1.276
0.590	-0.256	0.200	-1.146	0.210	-1.204	0.400	-0.552
0.630	-0.249	0.250	-1.200	0.250	-1.187	0.490	-0.386
0.700	-0.233	0.260	-1.147	0.340	-1.193	0.580	-0.354
0.750	-0.279	0.280	-1.177	0.370	-1.192	0.650	-0.377
0.810	-0.264	0.290	-1.169	0.400	-0.727	0.700	-0.367
0.840	-0.255	0.310	-1.117	0.410	-3.169**	0.750	-0.373
0.900	-0.179	0.320	-1.138	0.430	-0.585	0.800	-0.338
0.960	-0.073	0.340	-1.124	0.440	-0.513	0.830	-0.280
		0.350	-0.508**	0.460	-0.453	0.900	-0.129
		0.370	-1.093	0.490	-0.323	0.960	-0.002
		0.380	-1.104	0.500	-0.324		
		0.400	-0.609	0.520	-0.292		
		0.410	-0.553	0.540	-0.265		
		0.430	-0.449	0.550	-0.256		
		0.440	-0.372	0.580	-0.243		
		0.460	-0.366	0.600	-0.250		
		0.470	-0.291	0.610	-0.239		
		0.490	-0.240	0.650	-0.495		
		0.500	-0.242	0.700	-0.305		
		0.520	-0.205	0.750	-0.376		
		0.530	-0.175	0.820	-0.301		
		0.550	-0.215	0.890	-0.107		
		0.560	-0.205	0.900	-0.092		
		0.580	-0.192	0.960	0.035		
		0.590	-0.255				
		0.600	-0.249				
		0.640	-0.300				
		0.700	-0.287				
		0.750	-0.027**				
		0.820	-0.271				
		0.870	-0.240				
		0.930	-0.108				
		0.960	-0.037				
			Lower Surface				
0.020	-0.943	0.020	-0.507	0.020	-0.283	0.020	-0.133
0.110	-0.096	0.060	-0.030	0.060	0.088	0.060	-0.026
0.230	-0.046	0.090	-0.020	0.090	0.073	0.110	0.011
0.400	-0.033	0.120	0.059	0.120	-0.155	0.250	-0.057
0.490	-0.021	0.200	-0.040	0.200	-0.072	0.400	-0.112
0.630	3.970**	0.260	0.010	0.250	-0.005	0.490	-0.171
0.750	0.013	0.400	-0.022	0.400	-0.071	0.580	-0.211
0.850	0.060	0.490	-0.084	0.490	-0.046	0.650	-0.087
0.900	0.146	0.580	-0.097	0.580	-0.136	0.750	0.142
0.960	0.124	0.640	0.061	0.650	-0.036	0.830	0.277
		0.750	0.190	0.750	-0.036	0.900	0.322
		0.870	0.222	0.890	0.295	0.960	0.249
		0.930	0.201	0.930	0.246		
		0.960	0.176	0.960	0.359		
CN =	0.343		0.526		0.548		0.575

Table E-2. Continued.

Flight 216, Wing sweep = 26°, Time = 10-27-8-500, MINF = 0.806, Camber = 10/2, ALPT = 8.10, BETA = -0.67, QINF = 307.8, RNPU = 2.5E+06, CNWP = 0.4330

η = 0.93		0.76		0.59		0.40	
			Upper Surface				
x/c	CP	x/c	CP	x/c	CP	x/c	CP
0.020	0.280	0.000	0.564	0.000	0.562**	0.010	-0.129
0.060	-0.212	0.020	0.083	0.020	0.118	0.020	-0.192
0.110	-0.510	0.040	0.050	0.060	0.026**	0.060	-0.837
0.200	-1.193	0.060	-0.411	0.090	-0.673	0.110	-1.137
0.230	-1.147	0.090	-0.572	0.110	-0.842	0.140	-1.438
0.400	-0.262	0.130	-0.813	0.130	-2.197**	0.190	-2.197**
0.490	-0.158	0.150	-1.087	0.150	-1.243	0.250	-1.386
0.590	-0.238	0.200	-1.192	0.210	-1.243	0.400	-0.734
0.630	-0.256	0.250	-1.259	0.250	-1.249	0.490	-0.435
0.700	-0.229	0.260	-1.191	0.340	-1.266	0.580	-0.359
0.750	-0.280	0.280	-1.243	0.370	-1.261	0.650	-0.357
0.810	-0.267	0.290	-1.230	0.400	-1.201	0.700	-0.342
0.840	-0.270	0.310	-1.186	0.410	-3.167**	0.750	-0.333
0.900	-0.196	0.320	-1.197	0.430	-0.717	0.800	-0.289
0.960	-0.093	0.340	-1.195	0.440	-0.649	0.830	-0.230
		0.350	-0.535**	0.460	-0.636	0.900	-0.101
		0.370	-1.163	0.490	-0.558	0.960	-0.011
		0.380	-1.245	0.500	-0.598		
		0.400	-1.143	0.520	-0.540		
		0.410	-0.972	0.540	-0.516		
		0.430	-0.632	0.550	-0.462		
		0.440	-0.566	0.580	-0.396		
		0.460	-0.560	0.600	-0.352		
		0.470	-0.510	0.610	-0.304		
		0.490	-0.468	0.650	-0.423		
		0.500	-0.429	0.700	-0.255		
		0.520	-0.395	0.750	-0.318		
		0.530	-0.318	0.820	-0.241		
		0.550	-0.306	0.890	-0.092		
		0.560	-0.257	0.900	-0.070		
		0.580	-0.210	0.960	0.033		
		0.590	-0.223				
		0.600	-0.216				
		0.640	-0.220				
		0.700	-0.243				
		0.750	-0.013**				
		0.820	-0.235				
		0.870	-0.204				
		0.930	-0.089				
		0.960	-0.029				
			Lower Surface				
0.020	-0.498	0.020	-0.250	0.020	-0.161	0.020	0.096
0.110	-0.049	0.060	0.076	0.060	0.147	0.060	-0.008
0.230	-0.013	0.090	0.051	0.090	0.119	0.110	0.084
0.400	-0.026	0.120	0.123	0.120	-0.107	0.250	-0.011
0.490	-0.021	0.200	-0.015	0.200	-0.048	0.400	-0.077
0.630	3.967**	0.260	0.031	0.250	0.037	0.490	-0.135
0.750	-0.002	0.400	-0.019	0.400	-0.047	0.580	-0.176
0.850	0.048	0.490	-0.066	0.490	-0.035	0.650	-0.087
0.900	0.142	0.580	-0.090	0.580	-0.121	0.750	0.147
0.960	0.104	0.640	0.061	0.650	-0.028	0.830	0.287
		0.750	0.174	0.750	-0.021	0.900	0.325
		0.870	0.209	0.890	0.288	0.960	0.246
		0.930	0.208	0.930	0.246		
		0.960	0.169	0.960	0.346		
CN =	0.380		0.590		0.632		0.650

Table E-2. Continued.

Flight 216, Wing sweep = 26°, Time = 10-27-13-500, MINF = 0.806, Camber = 10/2, ALPT = 10.28, BETA = -0.36, QINF = 307.4, RNPU = 2.5E+06, CNWP = 0.3816

η = 0.93		0.76		0.59		0.40	
			Upper Surface				
x/c	CP	*x/c*	CP	*x/c*	CP	*x/c*	CP
0.020	0.108	0.000	0.777	0.000	0.511**	0.010	-0.466
0.060	-0.365	0.020	-0.145	0.020	-0.108	0.020	-0.400
0.110	-0.686	0.040	-0.038	0.060	-0.240**	0.060	-0.971
0.200	-1.227	0.060	-0.592	0.090	-0.892	0.110	-1.262
0.230	-1.137	0.090	-0.778	0.110	-1.064	0.140	-1.550
0.400	-0.423	0.130	-0.964	0.130	-2.199**	0.190	-2.199**
0.490	-0.268	0.150	-1.182	0.150	-1.289	0.250	-1.568
0.590	-0.301	0.200	-1.247	0.210	-0.926	0.400	-0.942
0.630	-0.316	0.250	-0.921	0.250	-0.806	0.490	-0.351
0.700	-0.255	0.260	-0.800	0.340	-0.753	0.580	-0.222
0.750	-0.277	0.280	-0.836	0.370	-0.720	0.650	-0.283
0.810	-0.252	0.290	-0.794	0.400	-0.698	0.700	-0.262
0.840	-0.277	0.310	-0.795	0.410	-3.171**	0.750	-0.275
0.900	-0.198	0.320	-0.779	0.430	-0.673	0.800	-0.287
0.960	-0.126	0.340	-0.762	0.440	-0.640	0.830	-0.218
		0.350	-0.355**	0.460	-0.640	0.900	-0.155
		0.370	-0.699	0.490	-0.580	0.960	-0.076
		0.380	-0.754	0.500	-0.633		
		0.400	-0.644	0.520	-0.626		
		0.410	-0.701	0.540	-0.612		
		0.430	-0.679	0.550	-0.600		
		0.440	-0.614	0.580	-0.589		
		0.460	-0.658	0.600	-0.569		
		0.470	-0.620	0.610	-0.525		
		0.490	-0.600	0.650	-0.659		
		0.500	-0.570	0.700	-0.483		
		0.520	-0.570	0.750	-0.515		
		0.530	-0.517	0.820	-0.405		
		0.550	-0.557	0.890	-0.316		
		0.560	-0.493	0.900	-0.327		
		0.580	-0.488	0.960	-0.253		
		0.590	-0.467				
		0.600	-0.426				
		0.640	-0.343				
		0.700	-0.354				
		0.750	-0.004**				
		0.820	-0.238				
		0.870	-0.206				
		0.930	-0.200				
		0.960	-0.182				
			Lower Surface				
0.020	-0.171	0.020	0.039	0.020	0.097	0.020	0.378
0.110	0.005	0.060	0.246	0.060	0.312	0.060	0.015
0.230	0.050	0.090	0.172	0.090	0.249	0.110	0.223
0.400	-0.014	0.120	0.196	0.120	-0.008	0.250	0.075
0.490	-0.020	0.200	0.047	0.200	-0.003	0.400	0.003
0.630	3.974**	0.260	0.096	0.250	0.117	0.490	-0.083
0.750	-0.010	0.400	0.022	0.400	-0.003	0.580	-0.142
0.850	0.011	0.490	-0.044	0.490	-0.020	0.650	-0.064
0.900	0.127	0.580	-0.090	0.580	-0.098	0.750	0.144
0.960	0.081	0.640	0.047	0.650	-0.019	0.830	0.284
		0.750	0.147	0.750	0.009	0.900	0.317
		0.870	0.181	0.890	0.234	0.960	0.213
		0.930	0.128	0.930	0.161		
		0.960	0.053	0.960	0.197		
CN =	0.459		0.621		0.673		0.747

Table E-2. Continued.

Flight 216, Wing sweep = 26°, Time = 10-27-18-000, MINF = 0.794, Camber = 10/2, ALPT = 12.15, BETA = -0.88, QINF = 298.4, RNPU = 2.5E+06, CNWP = 0.1934

η = 0.93		0.76		0.59		0.40	
			Upper Surface				
x/c	CP	*x/c*	CP	*x/c*	CP	*x/c*	CP
0.020	-0.173	0.000	0.849	0.000	0.453**	0.010	-0.910
0.060	-0.573	0.020	-0.462	0.020	-0.436	0.020	-0.988
0.110	-0.878	0.040	-0.262	0.060	-0.394**	0.060	-1.157
0.200	-0.807	0.060	-0.818	0.090	-1.102	0.110	-1.481
0.230	-0.766	0.090	-1.022	0.110	-1.282	0.140	-1.442
0.400	-0.591	0.130	-1.164	0.130	-2.269**	0.190	-2.269**
0.490	-0.428	0.150	-1.385	0.150	-0.801	0.250	-1.230
0.590	-0.373	0.200	-1.482	0.210	-0.774	0.400	-0.987
0.630	-0.334	0.250	-1.206	0.250	-0.717	0.490	-0.757
0.700	-0.286	0.260	-1.037	0.340	-0.674	0.580	-0.581
0.750	-0.270	0.280	-1.049	0.370	-0.652	0.650	-0.521
0.810	-0.270	0.290	-0.997	0.400	-0.559	0.700	-0.487
0.840	-0.252	0.310	-0.952	0.410	-3.270**	0.750	-0.434
0.900	-0.223	0.320	-0.930	0.430	-0.622	0.800	-0.431
0.960	-0.182	0.340	-0.911	0.440	-0.597	0.830	-0.369
		0.350	-0.376**	0.460	-0.592	0.900	-0.331
		0.370	-0.809	0.490	-0.526	0.960	-0.287
		0.380	-0.816	0.500	-0.584		
		0.400	-0.652	0.520	-0.566		
		0.410	-0.630	0.540	-0.545		
		0.430	-0.406	0.550	-0.521		
		0.440	-0.366	0.580	-0.560		
		0.460	-0.356	0.600	-0.527		
		0.470	-0.283	0.610	-0.489		
		0.490	-0.242	0.650	-0.668		
		0.500	-0.242	0.700	-0.464		
		0.520	-0.248	0.750	-0.523		
		0.530	-0.243	0.820	-0.461		
		0.550	-0.274	0.890	-0.383		
		0.560	-0.260	0.900	-0.374		
		0.580	-0.229	0.960	-0.306		
		0.590	-0.273				
		0.600	-0.274				
		0.640	-0.276				
		0.700	-0.261				
		0.750	-0.008**				
		0.820	-0.174				
		0.870	-0.161				
		0.930	-0.191				
		0.960	-0.187				
			Lower Surface				
0.020	0.014	0.020	0.269	0.020	0.345	0.020	0.538
0.110	0.076	0.060	0.347	0.060	0.411	0.060	0.026
0.230	0.074	0.090	0.261	0.090	0.339	0.110	0.373
0.400	0.011	0.120	0.257	0.120	0.086	0.250	0.169
0.490	0.005	0.200	0.063	0.200	0.025	0.400	0.050
0.630	4.090**	0.260	0.146	0.250	0.183	0.490	-0.030
0.750	-0.011	0.400	0.057	0.400	0.048	0.580	-0.080
0.850	0.014	0.490	-0.007	0.490	-0.024	0.650	-0.025
0.900	0.084	0.580	-0.063	0.580	-0.083	0.750	0.155
0.960	0.017	0.640	0.067	0.650	-0.024	0.830	0.266
		0.750	0.155	0.750	0.005	0.900	0.284
		0.870	0.175	0.890	0.194	0.960	0.153
		0.930	0.114	0.930	0.132		
		0.960	0.040	0.960	0.154		
CN =	0.489		0.655		0.663		0.904

Table E-2. Continued.

Flight 216, Wing sweep = 26°, Time = 10-23-8-000, MINF = 0.795, Camber = 10/10, ALPT = 4.01, BETA = -0.21, QINF = 297.0, RNPU = 2.5E+06, CNWP = 0.2962

η = 0.93		0.76		0.59		0.40	
			Upper Surface				
x/c	CP	*x/c*	CP	*x/c*	CP	*x/c*	CP
0.020	0.522	0.000	0.128	0.000	0.322**	0.010	0.325
0.060	0.024	0.020	0.408	0.020	0.508	0.020	0.195
0.110	-0.374	0.040	0.333	0.060	0.137**	0.060	-0.366
0.200	-0.443	0.060	-0.114	0.090	-0.356	0.110	-0.737
0.230	-0.297	0.090	-0.333	0.110	-0.621	0.140	-1.205
0.400	-0.272	0.130	-0.603	0.130	-2.261**	0.190	-2.261**
0.490	-0.256	0.150	-0.911	0.150	-1.061	0.250	-0.451
0.590	-0.332	0.200	-1.002	0.210	-1.039	0.400	-0.393
0.630	-0.362	0.250	-0.457	0.250	-0.461	0.490	-0.369
0.700	-0.421	0.260	-0.355	0.340	-0.385	0.580	-0.378
0.750	-0.934	0.280	-0.353	0.370	-0.413	0.650	-0.478
0.810	-0.884	0.290	-0.344	0.400	-0.373	0.700	-0.464
0.840	-0.924	0.310	-0.352	0.410	-3.267**	0.750	-0.551
0.900	-0.208	0.320	-0.352	0.430	-0.409	0.800	-0.931
0.960	-0.174	0.340	-0.350	0.440	-0.387	0.830	-0.571
		0.350	-0.212**	0.460	-0.392	0.900	-0.390
		0.370	-0.344	0.490	-0.342	0.960	-0.397
		0.380	-0.384	0.500	-0.405		
		0.400	-0.327	0.520	-0.392		
		0.410	-0.380	0.540	-0.395		
		0.430	-0.342	0.550	-0.377		
		0.440	-0.320	0.580	-0.377		
		0.460	-0.373	0.600	-0.398		
		0.470	-0.370	0.610	-0.423		
		0.490	-0.366	0.650	-0.825		
		0.500	-0.369	0.700	-0.641		
		0.520	-0.370	0.750	-0.626		
		0.530	-0.372	0.820	-0.633		
		0.550	-0.421	0.890	-0.302		
		0.560	-0.394	0.900	-0.306		
		0.580	-0.378	0.960	-0.260		
		0.590	-0.427				
		0.600	-0.426				
		0.640	-0.611				
		0.700	-0.496				
		0.750	-0.023**				
		0.820	-0.581				
		0.870	-0.373				
		0.930	-0.256				
		0.960	-0.270				
			Lower Surface				
0.020	-0.840	0.020	-1.102	0.020	-0.702	0.020	-0.981
0.110	-0.337	0.060	-0.281	0.060	-0.392	0.060	0.000
0.230	-0.059	0.090	-0.232	0.090	-0.200	0.110	-0.204
0.400	0.045	0.120	-0.144	0.120	-0.320	0.250	-0.162
0.490	0.076	0.200	-0.055	0.200	-0.089	0.400	-0.145
0.630	4.127**	0.260	-0.040	0.250	-0.049	0.490	-0.147
0.750	0.149	0.400	0.000	0.400	-0.054	0.580	-0.077
0.850	0.181	0.490	0.008	0.490	-0.043	0.650	0.091
0.900	0.250	0.580	0.061	0.580	0.018	0.750	0.321
0.960	0.119	0.640	0.220	0.650	-0.039	0.830	0.424
		0.750	0.270	0.750	-0.007	0.900	0.482
		0.870	0.307	0.890	0.394	0.960	0.318
		0.930	0.245	0.930	0.322		
		0.960	0.154	0.960	0.353		
CN =	0.392		0.483		0.479		0.526

Table E-2. Continued.

Flight 216, Wing sweep = 26°, Time = 10-28-48-500, MINF = 0.805, Camber = 10/10, ALPT = 4.06, BETA = -0.33, QINF = 304.2, RNPU = 2.5E+06, CNWP = 0.3188

η = 0.93		0.76		0.59		0.40	
			Upper Surface				
x/c	CP	*x/c*	CP	*x/c*	CP	*x/c*	CP
0.020	0.528	0.000	0.131	0.000	0.241**	0.010	0.340
0.060	0.044	0.020	0.400	0.020	0.530	0.020	0.183
0.110	-0.340	0.040	0.360	0.060	0.259**	0.060	-0.355
0.200	-0.678	0.060	-0.109	0.090	-0.335	0.110	-0.708
0.230	-0.324	0.090	-0.315	0.110	-0.604	0.140	-1.157
0.400	-0.255	0.130	-0.574	0.130	-2.206**	0.190	-2.206**
0.490	-0.241	0.150	-0.884	0.150	-1.025	0.250	-0.583
0.590	-0.322	0.200	-0.976	0.210	-1.012	0.400	-0.381
0.630	-0.352	0.250	-0.844	0.250	-0.849	0.490	-0.358
0.700	-0.397	0.260	-0.439	0.340	-0.344	0.580	-0.377
0.750	-0.844	0.280	-0.360	0.370	-0.362	0.650	-0.464
0.810	-0.853	0.290	-0.317	0.400	-0.354	0.700	-0.451
0.840	-0.892	0.310	-0.313	0.410	-3.187**	0.750	-0.542
0.900	-0.216	0.320	-0.315	0.430	-0.382	0.800	-0.996
0.960	-0.189	0.340	-0.313	0.440	-0.365	0.830	-0.583
		0.350	-0.210**	0.460	-0.381	0.900	-0.396
		0.370	-0.316	0.490	-0.339	0.960	-0.393
		0.380	-0.359	0.500	-0.389		
		0.400	-0.285	0.520	-0.380		
		0.410	-0.359	0.540	-0.370		
		0.430	-0.320	0.550	-0.354		
		0.440	-0.295	0.580	-0.383		
		0.460	-0.350	0.600	-0.387		
		0.470	-0.346	0.610	-0.397		
		0.490	-0.351	0.650	-0.799		
		0.500	-0.353	0.700	-0.652		
		0.520	-0.359	0.750	-0.639		
		0.530	-0.361	0.820	-0.637		
		0.550	-0.409	0.890	-0.289		
		0.560	-0.389	0.900	-0.328		
		0.580	-0.367	0.960	-0.276		
		0.590	-0.414				
		0.600	-0.414				
		0.640	-0.626				
		0.700	-0.540				
		0.750	-0.017**				
		0.820	-0.565				
		0.870	-0.376				
		0.930	-0.266				
		0.960	-0.276				
			Lower Surface				
0.020	-0.862	0.020	-0.995	0.020	-0.713	0.020	-0.962
0.110	-0.333	0.060	-0.342	0.060	-0.406	0.060	0.002
0.230	-0.059	0.090	-0.270	0.090	-0.230	0.110	-0.217
0.400	0.039	0.120	-0.145	0.120	-0.327	0.250	-0.162
0.490	0.069	0.200	-0.055	0.200	-0.104	0.400	-0.146
0.630	4.032**	0.260	-0.051	0.250	-0.046	0.490	-0.141
0.750	0.140	0.400	0.002	0.400	-0.050	0.580	-0.087
0.850	0.179	0.490	0.010	0.490	-0.033	0.650	0.095
0.900	0.249	0.580	0.062	0.580	0.024	0.750	0.325
0.960	0.127	0.640	0.224	0.650	-0.032	0.830	0.424
		0.750	0.274	0.750	0.000	0.900	0.485
		0.870	0.302	0.890	0.401	0.960	0.324
		0.930	0.249	0.930	0.324		
		0.960	0.152	0.960	0.375		
CN =	0.389		0.482		0.494		0.535

Table E-2. Continued.

Flight 216, Wing sweep = 26°, Time = 10-30-38-500, MINF = 0.793, Camber = 10/11, ALPT = 5.05, BETA = -0.50, QINF = 295.7, RNPU = 2.4E+06, CNWP = 0.3418

η = 0.93		0.76		0.59		0.40	
			Upper Surface				
x/c	CP	*x/c*	CP	*x/c*	CP	*x/c*	CP
0.020	0.456	0.000	0.233	0.000	0.322**	0.010	0.191
0.060	-0.030	0.020	0.287	0.020	0.426	0.020	0.040
0.110	-0.409	0.040	0.269	0.060	0.197**	0.060	-0.525
0.200	-1.111	0.060	-0.180	0.090	-0.429	0.110	-0.797
0.230	-0.436	0.090	-0.410	0.110	-0.702	0.140	-1.252
0.400	-0.268	0.130	-0.673	0.130	-2.273**	0.190	-2.273**
0.490	-0.260	0.150	-0.981	0.150	-1.130	0.250	-0.910
0.590	-0.337	0.200	-1.075	0.210	-1.125	0.400	-0.418
0.630	-0.375	0.250	-1.089	0.250	-1.082	0.490	-0.396
0.700	-0.425	0.260	-1.013	0.340	-0.374	0.580	-0.399
0.750	-0.973	0.280	-0.952	0.370	-0.362	0.650	-0.498
0.810	-0.933	0.290	-0.519	0.400	-0.332	0.700	-0.485
0.840	-0.982	0.310	-0.399	0.410	-3.283**	0.750	-0.570
0.900	-0.252	0.320	-0.382	0.430	-0.383	0.800	-1.085
0.960	-0.227	0.340	-0.305	0.440	-0.365	0.830	-0.709
		0.350	-0.190**	0.460	-0.382	0.900	-0.397
		0.370	-0.285	0.490	-0.323	0.960	-0.353
		0.380	-0.336	0.500	-0.389		
		0.400	-0.283	0.520	-0.381		
		0.410	-0.350	0.540	-0.398		
		0.430	-0.319	0.550	-0.391		
		0.440	-0.290	0.580	-0.402		
		0.460	-0.362	0.600	-0.412		
		0.470	-0.359	0.610	-0.426		
		0.490	-0.363	0.650	-0.867		
		0.500	-0.369	0.700	-0.657		
		0.520	-0.367	0.750	-0.639		
		0.530	-0.375	0.820	-0.632		
		0.550	-0.429	0.890	-0.287		
		0.560	-0.409	0.900	-0.322		
		0.580	-0.380	0.960	-0.270		
		0.590	-0.434				
		0.600	-0.441				
		0.640	-0.621				
		0.700	-0.512				
		0.750	-0.004**				
		0.820	-0.583				
		0.870	-0.406				
		0.930	-0.297				
		0.960	-0.296				
			Lower Surface				
0.020	-0.990	0.020	-0.754	0.020	-0.598	0.020	-0.452
0.110	-0.144	0.060	-0.201	0.060	-0.078	0.060	0.020
0.230	-0.028	0.090	-0.132	0.090	-0.038	0.110	-0.110
0.400	0.061	0.120	-0.029	0.120	-0.239	0.250	-0.100
0.490	0.081	0.200	-0.028	0.200	-0.070	0.400	-0.096
0.630	4.142**	0.260	0.009	0.250	-0.007	0.490	-0.105
0.750	0.150	0.400	0.028	0.400	-0.021	0.580	-0.065
0.850	0.191	0.490	0.025	0.490	-0.016	0.650	0.112
0.900	0.261	0.580	0.089	0.580	0.038	0.750	0.335
0.960	0.115	0.640	0.256	0.650	-0.023	0.830	0.438
		0.750	0.309	0.750	0.006	0.900	0.494
		0.870	0.358	0.890	0.441	0.960	0.326
		0.930	0.285	0.930	0.363		
		0.960	0.171	0.960	0.416		
CN =	0.492		0.581		0.584		0.654

Table E-2. Continued.

Flight 216, Wing sweep = 26°, Time = 10-29-6-000, MINF = 0.803, Camber = 10/11, ALPT = 6.26, BETA = -0.50, QINF = 302.9, RNPU = 2.5E+06, CNWP = 0.4874

η = 0.93		0.76		0.59		0.40	
			Upper Surface				
x/c	CP	*x/c*	CP	*x/c*	CP	*x/c*	CP
0.020	0.412	0.000	0.384	0.000	0.452**	0.010	0.068
0.060	-0.098	0.020	0.249	0.020	0.327	0.020	-0.059
0.110	-0.440	0.040	0.200	0.060	0.052**	0.060	-0.662
0.200	-1.142	0.060	-0.262	0.090	-0.496	0.110	-0.967
0.230	-1.042	0.090	-0.454	0.110	-0.734	0.140	-1.305
0.400	-0.196	0.130	-0.716	0.130	-2.214**	0.190	-2.214**
0.490	-0.237	0.150	-1.004	0.150	-1.164	0.250	-0.953
0.590	-0.331	0.200	-1.106	0.210	-1.157	0.400	-0.513
0.630	-0.368	0.250	-1.146	0.250	-1.144	0.490	-0.428
0.700	-0.413	0.260	-1.091	0.340	-1.127	0.580	-0.405
0.750	-1.071	0.280	-1.131	0.370	-1.109	0.650	-0.491
0.810	-1.026	0.290	-1.096	0.400	-0.735	0.700	-0.489
0.840	-1.055	0.310	-1.052	0.410	-3.201**	0.750	-0.594
0.900	-0.325	0.320	-1.074	0.430	-0.487	0.800	-0.799
0.960	-0.307	0.340	-1.054	0.440	-0.423	0.830	-0.615
		0.350	-0.479**	0.460	-0.378	0.900	-0.382
		0.370	-1.026	0.490	-0.302	0.960	-0.307
		0.380	-1.088	0.500	-0.333		
		0.400	-0.640	0.520	-0.333		
		0.410	-0.505	0.540	-0.323		
		0.430	-0.374	0.550	-0.327		
		0.440	-0.305	0.580	-0.335		
		0.460	-0.300	0.600	-0.349		
		0.470	-0.255	0.610	-0.370		
		0.490	-0.243	0.650	-0.783		
		0.500	-0.225	0.700	-0.582		
		0.520	-0.238	0.750	-0.582		
		0.530	-0.255	0.820	-0.781		
		0.550	-0.314	0.890	-0.263		
		0.560	-0.302	0.900	-0.298		
		0.580	-0.293	0.960	-0.233		
		0.590	-0.326				
		0.600	-0.357				
		0.640	-0.483				
		0.700	-0.490				
		0.750	0.006**				
		0.820	-0.593				
		0.870	-0.438				
		0.930	-0.285				
		0.960	-0.291				
			Lower Surface				
0.020	-1.037	0.020	-0.537	0.020	-0.377	0.020	-0.182
0.110	-0.089	0.060	-0.042	0.060	0.072	0.060	0.017
0.230	-0.021	0.090	-0.019	0.090	0.052	0.110	-0.002
0.400	0.043	0.120	0.053	0.120	-0.160	0.250	-0.043
0.490	0.063	0.200	-0.011	0.200	-0.042	0.400	-0.052
0.630	4.051**	0.260	0.036	0.250	0.035	0.490	-0.067
0.750	0.160	0.400	0.051	0.400	0.014	0.580	-0.028
0.850	0.192	0.490	0.045	0.490	-0.010	0.650	0.129
0.900	0.266	0.580	0.089	0.580	0.054	0.750	0.361
0.960	0.093	0.640	0.282	0.650	-0.010	0.830	0.459
		0.750	0.332	0.750	0.011	0.900	0.512
		0.870	0.392	0.890	0.483	0.960	0.341
		0.930	0.323	0.930	0.378		
		0.960	0.208	0.960	0.416		
CN =	0.570		0.691		0.703		0.714

Table E-2. Continued.

Flight 216, Wing sweep = 26°, Time = 10-29-11-000, MINF = 0.795, Camber = 10/11, ALPT = 7.98, BETA = -0.10, QINF = 296.7, RNPU = 2.4E+06, CNWP = 0.5321

η = 0.93		0.76		0.59		0.40	
			Upper Surface				
x/c	CP	*x/c*	CP	*x/c*	CP	*x/c*	CP
0.020	0.267	0.000	0.599	0.000	0.471**	0.010	-0.174
0.060	-0.231	0.020	0.055	0.020	0.083	0.020	-0.240
0.110	-0.592	0.040	0.028	0.060	-0.058**	0.060	-0.846
0.200	-1.237	0.060	-0.456	0.090	-0.696	0.110	-1.194
0.230	-1.163	0.090	-0.607	0.110	-0.882	0.140	-1.463
0.400	-0.511	0.130	-0.851	0.130	-2.259**	0.190	-2.259**
0.490	-0.241	0.150	-1.121	0.150	-1.284	0.250	-1.460
0.590	-0.330	0.200	-1.229	0.210	-1.281	0.400	-0.816
0.630	-0.387	0.250	-1.293	0.250	-1.289	0.490	-0.615
0.700	-0.425	0.260	-1.232	0.340	-1.294	0.580	-0.540
0.750	-1.117	0.280	-1.273	0.370	-1.307	0.650	-0.563
0.810	-1.052	0.290	-1.247	0.400	-1.256	0.700	-0.572
0.840	-1.098	0.310	-1.217	0.410	-3.266**	0.750	-0.671
0.900	-0.471	0.320	-1.226	0.430	-1.286	0.800	-0.531
0.960	-0.469	0.340	-1.231	0.440	-1.265	0.830	-0.458
		0.350	-0.528**	0.460	-1.267	0.900	-0.204
		0.370	-1.190	0.490	-1.169	0.960	-0.176
		0.380	-1.277	0.500	-0.869		
		0.400	-1.165	0.520	-0.734		
		0.410	-1.224	0.540	-0.676		
		0.430	-1.181	0.550	-0.619		
		0.440	-1.131	0.580	-0.558		
		0.460	-1.225	0.600	-0.507		
		0.470	-1.198	0.610	-0.455		
		0.490	-1.173	0.650	-0.624		
		0.500	-0.953	0.700	-0.455		
		0.520	-0.721	0.750	-0.555		
		0.530	-0.552	0.820	-0.559		
		0.550	-0.528	0.890	-0.172		
		0.560	-0.464	0.900	-0.155		
		0.580	-0.396	0.960	-0.104		
		0.590	-0.396				
		0.600	-0.353				
		0.640	-0.352				
		0.700	-0.436				
		0.750	0.026**				
		0.820	-0.635				
		0.870	-0.464				
		0.930	-0.271				
		0.960	-0.218				
			Lower Surface				
0.020	-0.300	0.020	-0.113	0.020	-0.087	0.020	0.142
0.110	0.007	0.060	0.155	0.060	0.211	0.060	0.049
0.230	0.047	0.090	0.117	0.090	0.176	0.110	0.132
0.400	0.060	0.120	0.163	0.120	-0.055	0.250	0.044
0.490	0.080	0.200	0.046	0.200	0.001	0.400	0.015
0.630	4.136**	0.260	0.108	0.250	0.118	0.490	-0.007
0.750	0.160	0.400	0.099	0.400	0.066	0.580	0.023
0.850	0.196	0.490	0.081	0.490	-0.002	0.650	0.167
0.900	0.264	0.580	0.111	0.580	0.101	0.750	0.380
0.960	0.072	0.640	0.319	0.650	0.006	0.830	0.482
		0.750	0.362	0.750	0.043	0.900	0.535
		0.870	0.422	0.890	0.495	0.960	0.359
		0.930	0.357	0.930	0.413		
		0.960	0.244	0.960	0.439		
CN =	0.704		0.908		0.880		0.916

Table E-2. Continued.

Flight 204, Wing sweep = 26°, Time = 9-13-37-500, MINF = 0.797, Camber = 10/10, ALPT = 7.25, BETA = 0.19, QINF = 277.2, RNPU = 2.3E+06, CNWP = 0.5409

η = 0.93		0.76		0.59		0.40	
			Upper Surface				
x/c	CP	*x/c*	CP	*x/c*	CP	*x/c*	CP
0.020	0.340	0.000	0.565	0.000	1.418**	0.010	-0.143
0.060	-0.150	0.020	0.203	0.020	0.134	0.020	-0.101**
0.110	-0.452	0.040	0.058	0.060	0.009**	0.060	-0.760**
0.200	-1.208	0.060	-0.268	0.090	-0.522	0.110	-1.109
0.230	-1.044	0.090	-0.508	0.110	-0.826	0.140	-1.421
0.400	-0.345	0.130	-0.734	0.130	-1.030	0.190	-2.249**
0.490	-0.185	0.150	-1.078	0.150	-1.227	0.250	-1.420
0.590	-0.283	0.200	-1.117	0.210	-1.309	0.400	-0.672
0.630	-0.357	0.250	-1.240	0.250	-1.219	0.490	-0.520
0.700	-0.378	0.260	-1.253	0.340	-1.235	0.580	-0.456
0.750	-1.087	0.280	-1.204	0.370	-1.217	0.650	-0.527
0.810	-0.989	0.290	-1.196	0.400	-1.164	0.700	-0.514
0.840	-1.036	0.310	-1.154	0.410	-1.173	0.750	-0.611
0.900	-0.388	0.320	-1.162	0.430	-1.194	0.800	-0.622
0.960	-0.366	0.340	-1.228	0.440	-1.162	0.830	-0.588
		0.350	-0.408**	0.460	-0.665	0.900	-0.227
		0.370	-1.131	0.490	-0.579	0.960	-0.185**
		0.380	-1.204	0.500	-0.554		
		0.400	-1.072	0.520	-0.474		
		0.410	-1.140	0.540	-0.438		
		0.430	-1.103	0.550	-0.410		
		0.440	-1.077	0.580	-0.334		
		0.460	-1.085	0.600	-0.419		
		0.470	-0.659	0.610	-0.352		
		0.490	-0.487	0.650	0.096**		
		0.500	-0.434	0.700	-0.443		
		0.520	-0.399	0.750	-0.478		
		0.530	-0.305	0.820	-0.323		
		0.550	-0.299	0.890	-0.190		
		0.560	-0.242	0.900	-0.137		
		0.580	-0.223	0.960	-0.110		
		0.590	-0.264				
		0.600	-0.235				
		0.640	-0.438				
		0.700	-0.427				
		0.750	-0.027**				
		0.820	-0.537				
		0.870	-0.472				
		0.930	-0.265				
		0.960	-0.236				
			Lower Surface				
0.020	-0.558	0.020	-0.230	0.020	-0.252	0.020	0.023
0.110	0.035	0.060	0.118	0.060	0.196	0.060	0.108
0.230	0.083	0.090	0.111	0.090	0.112	0.110	0.139
0.400	0.085	0.120	0.175**	0.120	0.030	0.250	0.042
0.490	0.114	0.200	-0.013	0.200	0.185	0.400	-0.098
0.630	4.867**	0.260	0.046	0.250	0.060	0.490	-0.122
0.750	0.187	0.400	0.117	0.400	-0.009	0.580	0.008
0.850	0.226	0.490	0.094	0.490	0.003	0.650	0.187
0.900	0.300	0.580	0.131	0.580	0.105	0.750	0.391
0.960	0.115	0.640	0.341	0.650	0.085	0.830	0.430
		0.750	0.367	0.750	-0.543**	0.900	0.489
		0.870	0.472	0.890	0.519	0.960	0.392
		0.930	0.368	0.930	0.348		
		0.960	0.258	0.960	0.269		
CN =	0.655		0.813		0.792		0.836

Table E-2. Continued.

Flight 204, Wing sweep = 26°, Time = 9-13-41-500, MINF = 0.794, Camber = 10/10, ALPT = 8.13, BETA = -0.10, QINF = 276.5, RNPU = 2.3E+06, CNWP = 0.6455

η = 0.93		0.76		0.59		0.40	
			Upper Surface				
x/c	CP	*x/c*	CP	*x/c*	CP	*x/c*	CP
0.020	0.240	0.000	0.688	0.000	1.411**	0.010	-0.153
0.060	-0.232	0.020	0.059	0.020	0.069	0.020	-0.217**
0.110	-0.533	0.040	0.031	0.060	-0.073**	0.060	-0.889**
0.200	-1.246	0.060	-0.398	0.090	-0.695	0.110	-1.198
0.230	-1.167	0.090	-0.595	0.110	-0.925	0.140	-1.491
0.400	-0.777	0.130	-0.823	0.130	-1.102	0.190	-2.266**
0.490	-0.266	0.150	-1.045	0.150	-1.292	0.250	-1.495
0.590	-0.296	0.200	-1.180	0.210	-1.294	0.400	-0.865
0.630	-0.362	0.250	-1.305	0.250	-1.288	0.490	-0.640
0.700	-0.407	0.260	-1.252	0.340	-1.331	0.580	-0.573
0.750	-1.103	0.280	-1.287	0.370	-1.311	0.650	-0.569
0.810	-1.003	0.290	-1.278	0.400	-1.243	0.700	-0.585
0.840	-1.098	0.310	-1.234	0.410	-1.265	0.750	-0.647
0.900	-0.459	0.320	-1.241	0.430	-1.290	0.800	-0.484
0.960	-0.455	0.340	-1.243	0.440	-1.284	0.830	-0.406
		0.350	-0.445**	0.460	-1.036	0.900	-0.179
		0.370	-1.217	0.490	-1.222	0.960	-0.124**
		0.380	-1.285	0.500	-1.281		
		0.400	-1.162	0.520	-1.131		
		0.410	-1.212	0.540	-0.833		
		0.430	-1.201	0.550	-0.724		
		0.440	-1.160	0.580	-0.619		
		0.460	-1.222	0.600	-0.595		
		0.470	-1.210	0.610	-0.565		
		0.490	-1.164	0.650	0.120**		
		0.500	-1.162	0.700	-0.444		
		0.520	-1.162	0.750	-0.499		
		0.530	-0.881	0.820	-0.178		
		0.550	-0.635	0.890	-0.131		
		0.560	-0.536	0.900	-0.103		
		0.580	-0.471	0.960	-0.048		
		0.590	-0.485				
		0.600	-0.434				
		0.640	-0.308				
		0.700	-0.396				
		0.750	0.119**				
		0.820	-0.931				
		0.870	-0.315				
		0.930	-0.146				
		0.960	-0.102				
			Lower Surface				
0.020	-0.229	0.020	-0.001	0.020	-0.019	0.020	0.227
0.110	0.071	0.060	0.240	0.060	0.297	0.060	0.097
0.230	0.100	0.090	0.182	0.090	0.278	0.110	0.204
0.400	0.121	0.120	0.223**	0.120	0.081	0.250	0.091
0.490	0.110	0.200	0.105	0.200	0.213	0.400	0.040
0.630	4.867**	0.260	0.160	0.250	0.191	0.490	0.056
0.750	0.191	0.400	0.130	0.400	0.127	0.580	0.054
0.850	0.222	0.490	0.127	0.490	0.102	0.650	0.216
0.900	0.303	0.580	0.151	0.580	0.133	0.750	0.428
0.960	0.115	0.640	0.346	0.650	0.125	0.830	0.537
		0.750	0.402	0.750	-0.556**	0.900	0.582
		0.870	0.483	0.890	0.548	0.960	0.403
		0.930	0.392	0.930	0.440		
		0.960	0.290	0.960	0.283		
CN =	0.775		0.965		0.953		0.960

Table E-2. Continued.

Flight 204, Wing sweep = 26°, Time = 9-13-34-500, MINF = 0.796, Camber = 10/10, ALPT = 6.19, BETA = -0.56, QINF = 275.6, RNPU = 2.3E+06, CNWP = 0.4409

η = 0.93		0.76		0.59		0.40	
			Upper Surface				
x/c	CP	*x/c*	CP	*x/c*	CP	*x/c*	CP
0.020	0.418	0.000	0.362	0.000	1.261**	0.010	0.073
0.060	-0.128	0.020	0.143	0.020	0.279	0.020	-0.062**
0.110	-0.414	0.040	0.057	0.060	0.080**	0.060	-0.666**
0.200	-1.203	0.060	-0.225	0.090	-0.514	0.110	-1.040
0.230	-1.084	0.090	-0.437	0.110	-0.759	0.140	-1.313
0.400	-0.180	0.130	-0.742	0.130	-1.001	0.190	-2.256**
0.490	-0.205	0.150	-0.941	0.150	-1.194	0.250	-0.957
0.590	-0.375	0.200	-1.130	0.210	-1.236	0.400	-0.507
0.630	-0.380	0.250	-1.178	0.250	-1.135	0.490	-0.459
0.700	-0.410	0.260	-1.096	0.340	-1.295	0.580	-0.564
0.750	-1.074	0.280	-1.191	0.370	-0.922	0.650	-0.516
0.810	-1.046	0.290	-1.288	0.400	-0.570	0.700	-0.491
0.840	-1.219	0.310	-1.056	0.410	-0.507	0.750	-0.609
0.900	-0.442	0.320	-1.068	0.430	-0.457	0.800	-0.806
0.960	-0.232	0.340	-1.048	0.440	-0.405	0.830	-0.646
		0.350	-0.413**	0.460	-0.245	0.900	-0.391
		0.370	-1.000	0.490	-0.311	0.960	-0.442**
		0.380	-0.669	0.500	-0.456		
		0.400	-0.472	0.520	-0.317		
		0.410	-0.424	0.540	-0.367		
		0.430	-0.356	0.550	-0.477		
		0.440	-0.298	0.580	-0.349		
		0.460	-0.222	0.600	-0.384		
		0.470	-0.293	0.610	-0.425		
		0.490	-0.214	0.650	0.018**		
		0.500	-0.222	0.700	-0.770		
		0.520	-0.409	0.750	-0.603		
		0.530	-0.308	0.820	-0.449		
		0.550	-0.325	0.890	-0.291		
		0.560	-0.365	0.900	-0.301		
		0.580	-0.271	0.960	-0.230		
		0.590	-0.518				
		0.600	-0.369				
		0.640	-0.525				
		0.700	-0.551				
		0.750	0.085**				
		0.820	-0.606				
		0.870	-0.497				
		0.930	-0.308				
		0.960	-0.295				
			Lower Surface				
0.020	-0.567	0.020	-0.659	0.020	-0.354	0.020	-0.275
0.110	-0.161	0.060	-0.078	0.060	0.038	0.060	0.051
0.230	0.001	0.090	-0.047	0.090	0.058	0.110	-0.067
0.400	0.100	0.120	0.023**	0.120	-0.131	0.250	-0.074
0.490	0.045	0.200	0.044	0.200	0.058	0.400	-0.061
0.630	4.901**	0.260	0.004	0.250	0.042	0.490	-0.094
0.750	0.203	0.400	0.008	0.400	-0.089	0.580	-0.024
0.850	0.198	0.490	0.017	0.490	-0.103	0.650	0.138
0.900	0.306	0.580	-0.058	0.580	0.071	0.750	0.330
0.960	0.146	0.640	0.300	0.650	0.032	0.830	0.422
		0.750	0.189	0.750	-0.540**	0.900	0.560
		0.870	0.438	0.890	0.353	0.960	0.387
		0.930	0.284	0.930	0.351		
		0.960	0.170	0.960	0.229		
CN =	0.603		0.668		0.683		0.724

Table E-2. Continued.

Flight 204, Wing sweep = 26°, Time = 9-13-48-500, MINF = 0.788, Camber = 10/10, ALPT = 9.09, BETA = -0.04, QINF = 277.2, RNPU = 2.3E+06, CNWP = 0.7290

η = 0.93		0.76		0.59		0.40	
			Upper Surface				
x/c	CP	*x/c*	CP	*x/c*	CP	*x/c*	CP
0.020	0.108	0.000	0.831	0.000	1.424**	0.010	-0.371
0.060	-0.336	0.020	-0.082	0.020	-0.080	0.020	-0.350**
0.110	-0.633	0.040	-0.107	0.060	-0.158**	0.060	-0.977**
0.200	-1.304	0.060	-0.541	0.090	-0.839	0.110	-1.342
0.230	-1.221	0.090	-0.772	0.110	-1.064	0.140	-1.596
0.400	-0.991	0.130	-0.911	0.130	-1.233	0.190	-2.300**
0.490	-0.361	0.150	-1.136	0.150	-1.384	0.250	-1.577
0.590	-0.314	0.200	-1.246	0.210	-1.378	0.400	-1.072
0.630	-0.380	0.250	-1.375	0.250	-1.367	0.490	-0.767
0.700	-0.420	0.260	-1.313	0.340	-1.403	0.580	-0.616
0.750	-1.090	0.280	-1.365	0.370	-1.403	0.650	-0.549
0.810	-1.008	0.290	-1.365	0.400	-1.345	0.700	-0.515
0.840	-1.104	0.310	-1.315	0.410	-1.355	0.750	-0.560
0.900	-0.548	0.320	-1.321	0.430	-1.378	0.800	-0.437
0.960	-0.522	0.340	-1.327	0.440	-1.369	0.830	-0.368
		0.350	-0.443**	0.460	-1.118	0.900	-0.155
		0.370	-1.305	0.490	-1.302	0.960	-0.098**
		0.380	-1.382	0.500	-1.378		
		0.400	-1.255	0.520	-1.196		
		0.410	-1.313	0.540	-0.895		
		0.430	-1.288	0.550	-0.805		
		0.440	-1.251	0.580	-0.723		
		0.460	-1.325	0.600	-0.727		
		0.470	-1.267	0.610	-0.686		
		0.490	-1.268	0.650	0.139**		
		0.500	-1.275	0.700	-0.554		
		0.520	-1.270	0.750	-0.539		
		0.530	-1.239	0.820	-0.082		
		0.550	-0.855	0.890	-0.190		
		0.560	-0.708	0.900	-0.171		
		0.580	-0.627	0.960	-0.105		
		0.590	-0.638				
		0.600	-0.611				
		0.640	-0.395				
		0.700	-0.399				
		0.750	0.146**				
		0.820	-0.474				
		0.870	-0.204				
		0.930	-0.106				
		0.960	-0.102				
			Lower Surface				
0.020	-0.090	0.020	0.158	0.020	0.140	0.020	0.395
0.110	0.107	0.060	0.311	0.060	0.375	0.060	0.042
0.230	0.156	0.090	0.249	0.090	0.340	0.110	0.249
0.400	0.124	0.120	0.278**	0.120	0.126	0.250	0.153
0.490	0.118	0.200	0.152	0.200	0.240	0.400	0.087
0.630	4.817**	0.260	0.207	0.250	0.230	0.490	0.088
0.750	0.202	0.400	0.165	0.400	0.145	0.580	0.099
0.850	0.228	0.490	0.154	0.490	0.110	0.650	0.247
0.900	0.306	0.580	0.170	0.580	0.164	0.750	0.451
0.960	0.109	0.640	0.360	0.650	0.133	0.830	0.543
		0.750	0.406	0.750	-0.594**	0.900	0.598
		0.870	0.495	0.890	0.555	0.960	0.419
		0.930	0.392	0.930	0.438		
		0.960	0.285	0.960	0.306		
CN =	0.861		1.021		1.051		1.040

Table E-2. Continued.

Flight 204, Wing sweep = 26°, Time = 9-13-51-500, MINF = 0.789, Camber = 10/10, ALPT = 10.08, BETA = 0.80, QINF = 281.5, RNPU = 2.3E+06, CNWP = 0.5351

η = 0.93		0.76		0.59		0.40	
			Upper Surface				
x/c	CP	*x/c*	CP	*x/c*	CP	*x/c*	CP
0.020	0.038	0.000	0.888	0.000	1.379**	0.010	-0.455
0.060	-0.401	0.020	-0.359	0.020	-0.164	0.020	-0.390**
0.110	-0.697	0.040	-0.161	0.060	-0.298**	0.060	-1.030**
0.200	-1.283	0.060	-0.800	0.090	-0.905	0.110	-1.467
0.230	-1.252	0.090	-0.835	0.110	-1.105	0.140	-1.613
0.400	-0.580	0.130	-0.988	0.130	-1.290	0.190	-2.296**
0.490	-0.238	0.150	-1.184	0.150	-1.417	0.250	-1.645
0.590	-0.334	0.200	-1.294	0.210	-1.318	0.400	-1.144
0.630	-0.407	0.250	-1.381	0.250	-0.886	0.490	-0.636
0.700	-0.442	0.260	-1.329	0.340	-0.869	0.580	-0.329
0.750	-1.062	0.280	-1.307	0.370	-0.839	0.650	-0.422
0.810	-1.016	0.290	-1.168	0.400	-0.774	0.700	-0.409
0.840	-1.111	0.310	-1.119	0.410	-0.801	0.750	-0.525
0.900	-0.420	0.320	-1.112	0.430	-0.797	0.800	-0.490
0.960	-0.421	0.340	-1.068	0.440	-0.777	0.830	-0.460
		0.350	-0.302**	0.460	-0.524	0.900	-0.211
		0.370	-0.834	0.490	-0.737	0.960	-0.140**
		0.380	-0.872	0.500	-0.774		
		0.400	-0.745	0.520	-0.748		
		0.410	-0.768	0.540	-0.752		
		0.430	-0.751	0.550	-0.754		
		0.440	-0.709	0.580	-0.731		
		0.460	-0.722	0.600	-0.742		
		0.470	-0.717	0.610	-0.719		
		0.490	-0.676	0.650	0.085**		
		0.500	-0.653	0.700	-0.621		
		0.520	-0.656	0.750	-0.594		
		0.530	-0.622	0.820	-0.180		
		0.550	-0.572	0.890	-0.461		
		0.560	-0.599	0.900	-0.406		
		0.580	-0.547	0.960	-0.336		
		0.590	-0.577				
		0.600	-0.540				
		0.640	-0.400				
		0.700	-0.413				
		0.750	0.136**				
		0.820	-0.291				
		0.870	-0.279				
		0.930	-0.310				
		0.960	-0.288				
			Lower Surface				
0.020	-0.016	0.020	0.252	0.020	0.211	0.020	0.470
0.110	0.119	0.060	0.346	0.060	0.364	0.060	0.118
0.230	0.156	0.090	0.273	0.090	0.379	0.110	0.352
0.400	0.118	0.120	0.304**	0.120	0.159	0.250	0.175
0.490	0.123	0.200	0.161	0.200	0.246	0.400	0.116
0.630	4.712**	0.260	0.226	0.250	0.249	0.490	0.094
0.750	0.210	0.400	0.166	0.400	0.153	0.580	0.097
0.850	0.232	0.490	0.147	0.490	0.115	0.650	0.234
0.900	0.320	0.580	0.159	0.580	0.153	0.750	0.443
0.960	0.147	0.640	0.346	0.650	0.122	0.830	0.534
		0.750	0.391	0.750	0.069**	0.900	0.591
		0.870	0.487	0.890	0.538	0.960	0.406
		0.930	0.358	0.930	0.411		
		0.960	0.230	0.960	0.232		
CN =	0.800		0.918		0.937		1.055

Table E-2. Continued.

Flight 201, Wing sweep = 26°, Time = 8-31-7-500, MINF = 0.814, Camber = 10/10, ALPT = 4.04, BETA = -0.18, QINF = 320.1, RNPU = 2.6E+06, CNWP = 0.3605

η = 0.93		0.76		0.59		0.40	
			Upper Surface				
x/c	CP	*x/c*	CP	*x/c*	CP	*x/c*	CP
0.020	0.561	0.000	0.134	0.000	0.888**	0.010	0.402
0.060	0.071	0.020	0.552	0.020	0.563	0.020	0.291**
0.110	-0.294	0.040	0.402	0.060	0.516**	0.060	-0.308**
0.200	-1.019	0.060	-0.016	0.090	-0.279	0.110	-0.680
0.230	-0.331	0.090	-0.254	0.110	-0.544	0.140	-1.121
0.400	-0.214	0.130	-0.535	0.130	-0.816	0.190	-2.156**
0.490	-0.217	0.150	-0.841	0.150	-1.008	0.250	-0.768
0.590	-0.298	0.200	-0.947	0.210	-0.967	0.400	-0.346
0.630	-0.341	0.250	-0.927	0.250	-0.933	0.490	-0.329
0.700	-0.394	0.260	-0.897	0.340	-0.298	0.580	-0.329
0.750	-0.638	0.280	-0.484	0.370	-0.322	0.650	-0.450
0.810	-0.574	0.290	-0.333	0.400	-0.300	0.700	-0.409
0.840	-0.625	0.310	-0.280	0.410	-0.326	0.750	-0.517
0.900	-0.204	0.320	-0.275	0.430	-0.334	0.800	-1.041
0.960	-0.170	0.340	-0.255	0.440	-0.332	0.830	-0.576
		0.350	-0.126**	0.460	-0.115	0.900	-0.398
		0.370	-0.271	0.490	-0.300	0.960	-0.390**
		0.380	-0.308	0.500	-0.336		
		0.400	-0.252	0.520	-0.332		
		0.410	-0.297	0.540	-0.336		
		0.430	-0.286	0.550	-0.330		
		0.440	-0.280	0.580	-0.302		
		0.460	-0.303	0.600	-0.361		
		0.470	-0.312	0.610	-0.386		
		0.490	-0.312	0.650	0.035**		
		0.500	-0.306	0.700	-0.612		
		0.520	-0.319	0.750	-0.588		
		0.530	-0.323	0.820	-0.353		
		0.550	-0.334	0.890	-0.298		
		0.560	-0.364	0.900	-0.322		
		0.580	-0.319	0.960	-0.279		
		0.590	-0.381				
		0.600	-0.378				
		0.640	-0.591				
		0.700	-0.535				
		0.750	0.047**				
		0.820	-0.543				
		0.870	-0.352				
		0.930	-0.245				
		0.960	-0.244				
			Lower Surface				
0.020	-0.814	0.020	-0.919	0.020	-0.780	0.020	-0.958
0.110	-0.486	0.060	-0.553	0.060	-0.491	0.060	-1.142
0.230	-0.031	0.090	-0.326	0.090	-0.272	0.110	-0.082
0.400	0.080	0.120	-0.116**	0.120	-0.217	0.250	-0.149
0.490	0.102	0.200	-0.023	0.200	-0.032	0.400	-0.137
0.630	1.889**	0.260	-0.006	0.250	-0.028	0.490	-0.119
0.750	0.180	0.400	0.006	0.400	-0.042	0.580	-0.077
0.850	0.185	0.490	0.035	0.490	0.032	0.650	0.123
0.900	0.258	0.580	0.088	0.580	0.042	0.750	0.356
0.960	0.142	0.640	0.246	0.650	0.038	0.830	0.464
		0.750	0.298	0.750	0.018**	0.900	0.527
		0.870	0.372	0.890	0.451	0.960	0.359
		0.930	0.290	0.930	0.351		
		0.960	0.184	0.960	0.378		
CN =	0.355		0.465		0.481		0.486

Table E-2. Continued.

Flight 201, Wing sweep = 26°, Time = 8-31-19-500, MINF = 0.799, Camber = 10/10, ALPT = 6.03, BETA = -0.04, QINF = 306.9, RNPU = 2.5E+06, CNWP = 0.5275

η = 0.93		0.76		0.59		0.40	
			Upper Surface				
x/c	CP	*x/c*	CP	*x/c*	CP	*x/c*	CP
0.020	0.429	0.000	0.401	0.000	1.045**	0.010	0.115
0.060	-0.077	0.020	0.395	0.020	0.369	0.020	0.041**
0.110	-0.418	0.040	0.242	0.060	0.326**	0.060	-0.636**
0.200	-1.151	0.060	-0.175	0.090	-0.451	0.110	-0.949
0.230	-1.026	0.090	-0.402	0.110	-0.703	0.140	-1.293
0.400	-0.185	0.130	-0.681	0.130	-0.980	0.190	-2.240**
0.490	-0.221	0.150	-0.988	0.150	-1.143	0.250	-0.957
0.590	-0.310	0.200	-1.102	0.210	-1.140	0.400	-0.461
0.630	-0.355	0.250	-1.130	0.250	-1.154	0.490	-0.375
0.700	-0.421	0.260	-1.104	0.340	-1.111	0.580	-0.371
0.750	-1.053	0.280	-1.112	0.370	-1.071	0.650	-0.486
0.810	-0.981	0.290	-1.086	0.400	-0.492	0.700	-0.454
0.840	-1.050	0.310	-1.043	0.410	-0.460	0.750	-0.562
0.900	-0.268	0.320	-1.060	0.430	-0.399	0.800	-0.770
0.960	-0.230	0.340	-1.035	0.440	-0.338	0.830	-0.657
		0.350	-0.398**	0.460	-0.088	0.900	-0.321
		0.370	-1.021	0.490	-0.267	0.960	-0.257**
		0.380	-0.688	0.500	-0.290		
		0.400	-0.443	0.520	-0.257		
		0.410	-0.369	0.540	-0.300		
		0.430	-0.286	0.550	-0.297		
		0.440	-0.244	0.580	-0.292		
		0.460	-0.223	0.600	-0.347		
		0.470	-0.226	0.610	-0.380		
		0.490	-0.217	0.650	0.060**		
		0.500	-0.216	0.700	-0.589		
		0.520	-0.242	0.750	-0.539		
		0.530	-0.245	0.820	-0.472		
		0.550	-0.281	0.890	-0.240		
		0.560	-0.302	0.900	-0.240		
		0.580	-0.277	0.960	-0.182		
		0.590	-0.353				
		0.600	-0.347				
		0.640	-0.480				
		0.700	-0.481				
		0.750	0.076**				
		0.820	-0.573				
		0.870	-0.444				
		0.930	-0.250				
		0.960	-0.231				
			Lower Surface				
0.020	-0.564	0.020	-0.614	0.020	-0.441	0.020	-0.260
0.110	-0.140	0.060	-0.065	0.060	0.071	0.060	-1.010
0.230	0.017	0.090	0.008	0.090	0.071	0.110	0.076
0.400	0.103	0.120	0.091**	0.120	-0.003	0.250	-0.017
0.490	0.104	0.200	0.031	0.200	0.016	0.400	-0.034
0.630	1.980**	0.260	0.095	0.250	0.058	0.490	-0.035
0.750	0.193	0.400	0.056	0.400	0.023	0.580	-0.009
0.850	0.213	0.490	0.071	0.490	0.064	0.650	0.166
0.900	0.295	0.580	0.108	0.580	0.077	0.750	0.395
0.960	0.139	0.640	0.302	0.650	0.070	0.830	0.499
		0.750	0.358	0.750	0.035**	0.900	0.561
		0.870	0.452	0.890	0.529	0.960	0.384
		0.930	0.347	0.930	0.419		
		0.960	0.223	0.960	0.421		
CN =	0.579		0.677		0.696		0.642

Table E-2. Continued.

Flight 201, Wing sweep = 26°, Time = 8-31-27-000, MINF = 0.800, Camber = 10/10, ALPT = 6.99, BETA = 0.28, QINF = 307.5, RNPU = 2.5E+06, CNWP = 0.5905

η = 0.93		0.76		0.59		0.40	
			Upper Surface				
x/c	CP	*x/c*	CP	*x/c*	CP	*x/c*	CP
0.020	0.386	0.000	0.513	0.000	1.145**	0.010	-0.018
0.060	-0.130	0.020	0.303	0.020	0.271	0.020	-0.041**
0.110	-0.442	0.040	0.158	0.060	0.352**	0.060	-0.706**
0.200	-1.191	0.060	-0.245	0.090	-0.512	0.110	-1.048
0.230	-1.094	0.090	-0.457	0.110	-0.753	0.140	-1.384
0.400	-0.231	0.130	-0.717	0.130	-1.014	0.190	-2.230**
0.490	-0.186	0.150	-1.030	0.150	-1.179	0.250	-1.297
0.590	-0.297	0.200	-1.141	0.210	-1.186	0.400	-0.671
0.630	-0.349	0.250	-1.182	0.250	-1.195	0.490	-0.501
0.700	-0.404	0.260	-1.167	0.340	-1.191	0.580	-0.422
0.750	-1.076	0.280	-1.175	0.370	-1.187	0.650	-0.505
0.810	-0.980	0.290	-1.158	0.400	-1.148	0.700	-0.484
0.840	-1.053	0.310	-1.121	0.410	-1.153	0.750	-0.598
0.900	-0.345	0.320	-1.133	0.430	-1.169	0.800	-0.647
0.960	-0.321	0.340	-1.113	0.440	-1.143	0.830	-0.583
		0.350	-0.424**	0.460	-0.611	0.900	-0.274
		0.370	-1.099	0.490	-0.549	0.960	-0.197**
		0.380	-1.155	0.500	-0.489		
		0.400	-1.064	0.520	-0.434		
		0.410	-1.103	0.540	-0.399		
		0.430	-1.066	0.550	-0.348		
		0.440	-1.049	0.580	-0.306		
		0.460	-0.980	0.600	-0.321		
		0.470	-0.597	0.610	-0.319		
		0.490	-0.452	0.650	0.084**		
		0.500	-0.382	0.700	-0.440		
		0.520	-0.342	0.750	-0.483		
		0.530	-0.276	0.820	-0.375		
		0.550	-0.251	0.890	-0.185		
		0.560	-0.233	0.900	-0.176		
		0.580	-0.205	0.960	-0.134		
		0.590	-0.246				
		0.600	-0.221				
		0.640	-0.369				
		0.700	-0.439				
		0.750	0.092**				
		0.820	-0.574				
		0.870	-0.466				
		0.930	-0.226				
		0.960	-0.214				
			Lower Surface				
0.020	-0.675	0.020	-0.382	0.020	-0.238	0.020	-0.065
0.110	0.028	0.060	0.064	0.060	0.155	0.060	-0.960
0.230	0.059	0.090	0.085	0.090	0.143	0.110	0.125
0.400	0.072	0.120	0.157**	0.120	0.059	0.250	0.035
0.490	0.105	0.200	0.065	0.200	0.049	0.400	0.000
0.630	1.982**	0.260	0.136	0.250	0.107	0.490	-0.001
0.750	0.201	0.400	0.079	0.400	0.063	0.580	0.021
0.850	0.213	0.490	0.095	0.490	0.076	0.650	0.193
0.900	0.296	0.580	0.124	0.580	0.108	0.750	0.414
0.960	0.118	0.640	0.317	0.650	0.083	0.830	0.518
		0.750	0.385	0.750	0.059**	0.900	0.566
		0.870	0.471	0.890	0.548	0.960	0.406
		0.930	0.373	0.930	0.438		
		0.960	0.249	0.960	0.464		
CN =	0.630		0.792		0.789		0.772

Table E-2. Continued.

Flight 201, Wing sweep = 26°, Time = 8-31-42-000, MINF = 0.810, Camber = 10/10, ALPT = 8.08, BETA = 0.34, QINF = 321.9, RNPU = 2.6E+06, CNWP = 0.7250

η = 0.93		0.76		0.59		0.40	
			Upper Surface				
x/c	CP	*x/c*	CP	*x/c*	CP	*x/c*	CP
0.020	0.312	0.000	0.649	0.000	1.098**	0.010	-0.071
0.060	-0.180	0.020	0.225	0.020	0.143	0.020	-0.141**
0.110	-0.477	0.040	0.093	0.060	0.209**	0.060	-0.749**
0.200	-1.179	0.060	-0.326	0.090	-0.616	0.110	-1.123
0.230	-1.125	0.090	-0.523	0.110	-0.801	0.140	-1.415
0.400	-0.861	0.130	-0.756	0.130	-1.033	0.190	-2.175**
0.490	-0.608	0.150	-1.060	0.150	-1.204	0.250	-1.443
0.590	-0.317	0.200	-1.176	0.210	-1.200	0.400	-0.935
0.630	-0.359	0.250	-1.212	0.250	-1.238	0.490	-0.697
0.700	-0.393	0.260	-1.199	0.340	-1.254	0.580	-0.623
0.750	-1.023	0.280	-1.218	0.370	-1.255	0.650	-0.690
0.810	-0.960	0.290	-1.196	0.400	-1.190	0.700	-0.674
0.840	-1.037	0.310	-1.167	0.410	-1.221	0.750	-0.743
0.900	-0.447	0.320	-1.188	0.430	-1.247	0.800	-0.433
0.960	-0.435	0.340	-1.160	0.440	-1.235	0.830	-0.386
		0.350	-0.426**	0.460	-1.009	0.900	-0.205
		0.370	-1.156	0.490	-1.182	0.960	-0.178**
		0.380	-1.229	0.500	-1.218		
		0.400	-1.116	0.520	-1.221		
		0.410	-1.173	0.540	-1.213		
		0.430	-1.138	0.550	-1.189		
		0.440	-1.112	0.580	-1.166		
		0.460	-1.168	0.600	-1.193		
		0.470	-1.156	0.610	-1.148		
		0.490	-1.133	0.650	0.086**		
		0.500	-1.152	0.700	-0.540		
		0.520	-1.128	0.750	-0.489		
		0.530	-1.121	0.820	-0.065		
		0.550	-1.096	0.890	-0.156		
		0.560	-1.141	0.900	-0.127		
		0.580	-1.099	0.960	-0.088		
		0.590	-1.154				
		0.600	-1.113				
		0.640	-0.474				
		0.700	-0.416				
		0.750	0.108**				
		0.820	-0.553				
		0.870	-0.214				
		0.930	-0.117				
		0.960	-0.113				
			Lower Surface				
0.020	-0.444	0.020	-0.133	0.020	-0.101	0.020	0.180
0.110	0.037	0.060	0.170	0.060	0.239	0.060	-0.838
0.230	0.098	0.090	0.159	0.090	0.219	0.110	0.209
0.400	0.082	0.120	0.214**	0.120	0.119	0.250	0.074
0.490	0.110	0.200	0.106	0.200	0.092	0.400	0.037
0.630	1.849**	0.260	0.153	0.250	0.153	0.490	0.023
0.750	0.212	0.400	0.100	0.400	0.088	0.580	0.026
0.850	0.203	0.490	0.118	0.490	0.107	0.650	0.201
0.900	0.304	0.580	0.132	0.580	0.130	0.750	0.423
0.960	0.109	0.640	0.327	0.650	0.099	0.830	0.507
		0.750	0.393	0.750	0.056**	0.900	0.586
		0.870	0.503	0.890	0.547	0.960	0.422
		0.930	0.400	0.930	0.435		
		0.960	0.292	0.960	0.470		
CN =	0.789		0.949		0.975		0.904

Table E-2. Continued.

Flight 201, Wing sweep = 26°, Time = 8-31-47-000, MINF = 0.809, Camber = 10/10, ALPT = 9.21, BETA = 0.11, QINF = 324.0, RNPU = 2.6E+06, CNWP = 0.7585

η = 0.93		0.76		0.59		0.40	
			Upper Surface				
x/c	CP	*x/c*	CP	*x/c*	CP	*x/c*	CP
0.020	0.193	0.000	0.770	0.000	1.099**	0.010	-0.262
0.060	-0.290	0.020	0.033	0.020	-0.005	0.020	-0.283**
0.110	-0.565	0.040	-0.044	0.060	0.093**	0.060	-0.896**
0.200	-1.223	0.060	-0.451	0.090	-0.788	0.110	-1.223
0.230	-1.167	0.090	-0.647	0.110	-0.954	0.140	-1.503
0.400	-0.986	0.130	-0.842	0.130	-1.156	0.190	-2.185**
0.490	-0.767	0.150	-1.124	0.150	-1.295	0.250	-1.538
0.590	-0.285	0.200	-1.231	0.210	-1.293	0.400	-1.085
0.630	-0.349	0.250	-1.296	0.250	-1.308	0.490	-0.872
0.700	-0.400	0.260	-1.263	0.340	-1.328	0.580	-0.723
0.750	-1.025	0.280	-1.283	0.370	-1.333	0.650	-0.764
0.810	-0.951	0.290	-1.291	0.400	-1.297	0.700	-0.730
0.840	-1.042	0.310	-1.252	0.410	-1.305	0.750	-0.763
0.900	-0.634	0.320	-1.264	0.430	-1.320	0.800	-0.395
0.960	-0.518	0.340	-1.258	0.440	-1.307	0.830	-0.342
		0.350	-0.426**	0.460	-1.030	0.900	-0.185
		0.370	-1.244	0.490	-1.249	0.960	-0.124**
		0.380	-1.311	0.500	-1.304		
		0.400	-1.208	0.520	-1.306		
		0.410	-1.257	0.540	-1.310		
		0.430	-1.222	0.550	-1.292		
		0.440	-1.213	0.580	-1.269		
		0.460	-1.257	0.600	-1.131		
		0.470	-1.243	0.610	-0.789		
		0.490	-1.195	0.650	0.101**		
		0.500	-1.220	0.700	-0.568		
		0.520	-1.061	0.750	-0.580		
		0.530	-0.839	0.820	-0.177		
		0.550	-0.658	0.890	-0.317		
		0.560	-0.625	0.900	-0.335		
		0.580	-0.595	0.960	-0.281		
		0.590	-0.610				
		0.600	-0.562				
		0.640	-0.469				
		0.700	-0.473				
		0.750	0.119**				
		0.820	-0.265				
		0.870	-0.238				
		0.930	-0.275				
		0.960	-0.246				
			Lower Surface				
0.020	-0.178	0.020	0.042	0.020	0.074	0.020	0.341
0.110	0.071	0.060	0.260	0.060	0.300	0.060	-0.763
0.230	0.127	0.090	0.208	0.090	0.274	0.110	0.266
0.400	0.094	0.120	0.252**	0.120	0.168	0.250	0.126
0.490	0.098	0.200	0.131	0.200	0.122	0.400	0.079
0.630	1.812**	0.260	0.195	0.250	0.188	0.490	0.059
0.750	0.177	0.400	0.125	0.400	0.121	0.580	0.069
0.850	0.200	0.490	0.119	0.490	0.105	0.650	0.219
0.900	0.297	0.580	0.136	0.580	0.134	0.750	0.436
0.960	0.126	0.640	0.327	0.650	0.111	0.830	0.533
		0.750	0.376	0.750	0.085**	0.900	0.593
		0.870	0.472	0.890	0.539	0.960	0.416
		0.930	0.353	0.930	0.427		
		0.960	0.235	0.960	0.436		
CN =	0.852		0.951		1.064		1.007

Table E-2. Continued.

Flight 214, Wing sweep = 26°, Time = 9-0-54-000, MINF = 0.794, Camber = 0/11, ALPT = 4.01, BETA = -0.53, QINF = 295.6, RNPU = 2.4E+06, CNWP = 0.3069

η = 0.93		0.76		0.59		0.40	
			Upper Surface				
x/c	CP	*x/c*	CP	*x/c*	CP	*x/c*	CP
0.020	-1.078	0.000	0.701	0.000	-0.533**	0.010	-2.175
0.060	-0.335	0.020	-0.576	0.020	-0.847	0.020	-1.944
0.110	-1.157	0.040	-0.424	0.060	-0.970**	0.060	-1.749
0.200	-0.482	0.060	-0.556	0.090	-0.590	0.110	-0.417
0.230	-1.218	0.090	-1.292	0.110	-1.387	0.140	-0.738
0.400	-1.191	0.130	-1.311	0.130	-1.395	0.190	-2.267**
0.490	-1.184	0.150	-1.553	0.150	-0.577	0.250	-0.469
0.590	-1.259	0.200	-1.308	0.210	-1.436	0.400	-1.337
0.630	-0.507	0.250	-0.610	0.250	-0.449	0.490	-1.308
0.700	-1.379	0.260	-0.609	0.340	-1.359	0.580	-1.316
0.750	-1.666	0.280	-1.533	0.370	-0.665	0.650	-1.416
0.810	-1.627	0.290	-1.303	0.400	-0.511	0.700	-0.599
0.840	-1.705	0.310	-0.490	0.410	-3.197**	0.750	-0.798
0.900	-1.214	0.320	-1.302	0.430	-1.337	0.800	-2.037
0.960	-1.175	0.340	-0.368	0.440	-0.537	0.830	-1.549
		0.350	-1.143**	0.460	-0.638	0.900	-1.358
		0.370	-0.364	0.490	-1.262	0.960	-1.363
		0.380	-0.508	0.500	-1.335		
		0.400	-1.483	0.520	-0.643		
		0.410	-1.296	0.540	-1.557		
		0.430	-1.265	0.550	-1.323		
		0.440	-1.262	0.580	-1.549		
		0.460	-1.513	0.600	-0.559		
		0.470	-1.302	0.610	-1.354		
		0.490	-0.380	0.650	-1.794		
		0.500	-1.311	0.700	-1.590		
		0.520	-1.313	0.750	-0.743		
		0.530	-0.607	0.820	-1.563		
		0.550	-1.306	0.890	-1.273		
		0.560	-1.353	0.900	-1.307		
		0.580	-1.309	0.960	-1.253		
		0.590	-1.372				
		0.600	-1.350				
		0.640	-1.564				
		0.700	-0.517				
		0.750	-0.279**				
		0.820	-1.522				
		0.870	-0.504				
		0.930	-1.241				
		0.960	-0.438				
			Lower Surface				
0.020	-1.278	0.020	-1.372	0.020	-0.983	0.020	-0.651
0.110	-1.378	0.060	-0.197	0.060	-0.901	0.060	-0.957
0.230	-0.989	0.090	-0.146	0.090	-0.071	0.110	-0.956
0.400	-0.957	0.120	-1.065	0.120	-1.165	0.250	-0.246
0.490	-0.918	0.200	-0.100	0.200	-1.059	0.400	-0.226
0.630	0.781**	0.260	-0.150	0.250	-1.102	0.490	-1.082
0.750	-0.772	0.400	-1.214	0.400	-0.096	0.580	-0.111
0.850	0.062	0.490	-0.072	0.490	-0.192	0.650	-0.850
0.900	-0.634	0.580	-0.907	0.580	-0.144	0.750	-0.855
0.960	-0.795	0.640	0.115	0.650	-1.216	0.830	-0.522
		0.750	0.180	0.750	0.103	0.900	0.332
		0.870	-0.564	0.890	0.318	0.960	0.173
		0.930	0.176	0.930	-0.569		
		0.960	-0.060	0.960	0.125		
CN =	0.272		0.676		0.630		0.665

Table E-2. Continued.

Flight 214, Wing sweep = 26°, Time = 9-0-57-000, MINF = 0.791, Camber = 0/11, ALPT = 5.26, BETA = -0.44, QINF = 292.9, RNPU = 2.4E+06, CNWP = 0.0833

η = 0.93		0.76		0.59		0.40	
			Upper Surface				
x/c	CP	*x/c*	CP	*x/c*	CP	*x/c*	CP
0.020	-0.694	0.000	0.537	0.000	0.093**	0.010	-1.420
0.060	-0.614	0.020	-1.168	0.020	-1.265	0.020	-1.430
0.110	-0.594	0.040	-1.006	0.060	-0.651**	0.060	-1.362
0.200	-1.473	0.060	-1.091	0.090	-1.231	0.110	-1.261
0.230	-0.601	0.090	-0.716	0.110	-1.178	0.140	-1.248
0.400	-0.386	0.130	-0.727	0.130	-0.753	0.190	-2.281**
0.490	-0.530	0.150	-1.199	0.150	-0.650	0.250	-0.684
0.590	-0.599	0.200	-1.186	0.210	-0.746	0.400	-0.465
0.630	-0.634	0.250	-1.616	0.250	-1.202	0.490	-0.504
0.700	-0.704	0.260	-0.686	0.340	-0.490	0.580	-0.657
0.750	-0.947	0.280	-0.692	0.370	-0.569	0.650	-0.543
0.810	-0.983	0.290	-1.138	0.400	-0.671	0.700	-0.733
0.840	-1.078	0.310	-0.659	0.410	-3.220**	0.750	-0.828
0.900	-0.543	0.320	-0.674	0.430	-1.172	0.800	-1.207
0.960	-0.990	0.340	-0.501	0.440	-1.616	0.830	-0.870
		0.350	-0.440**	0.460	-0.525	0.900	-0.649
		0.370	-1.102	0.490	-0.648	0.960	-0.611
		0.380	-0.671	0.500	-1.147		
		0.400	-0.617	0.520	-0.694		
		0.410	-1.112	0.540	-0.525		
		0.430	-0.621	0.550	-1.587		
		0.440	-0.609	0.580	-0.645		
		0.460	-0.404	0.600	-0.691		
		0.470	-0.637	0.610	-1.169		
		0.490	-1.102	0.650	-1.142		
		0.500	-0.648	0.700	-0.920		
		0.520	-0.405	0.750	-1.358		
		0.530	-0.643	0.820	-0.823		
		0.550	-0.690	0.890	-0.544		
		0.560	-0.682	0.900	-0.606		
		0.580	-0.646	0.960	-0.537		
		0.590	-0.700				
		0.600	-0.660				
		0.640	-1.373				
		0.700	-0.773				
		0.750	-0.279**				
		0.820	-1.305				
		0.870	-0.670				
		0.930	-0.560				
		0.960	-0.548				
			Lower Surface				
0.020	-0.388	0.020	-0.910	0.020	-0.578	0.020	0.173
0.110	-0.387	0.060	-0.650	0.060	0.013	0.060	-0.031
0.230	-0.261	0.090	-0.235	0.090	-0.203	0.110	-0.200
0.400	-0.255	0.120	-0.753	0.120	-0.403	0.250	-0.877
0.490	-0.209	0.200	-0.742	0.200	-0.270	0.400	-0.372
0.630	0.794**	0.260	-0.789	0.250	-0.806	0.490	-0.358
0.750	-0.556	0.400	-0.731	0.400	-0.155	0.580	-0.779
0.850	-0.527	0.490	-0.250	0.490	-0.756	0.650	-0.143
0.900	0.035	0.580	-0.208	0.580	-0.704	0.750	0.083
0.960	0.019	0.640	0.006	0.650	-1.221	0.830	0.328
		0.750	0.067	0.750	-0.586	0.900	0.230
		0.870	0.133	0.890	-0.718	0.960	0.060
		0.930	0.068	0.930	0.197		
		0.960	-0.530	0.960	0.100		
CN =	0.381		0.523		0.330		0.505

Table E-2. Continued.

Flight 214, Wing sweep = 26°, Time = 9-1-13-500, MINF = 0.800, Camber = 0/11, ALPT = 7.09, BETA = -0.24, QINF = 290.0, RNPU = 2.4E+06, CNWP = 0.7447

η = 0.93		0.76		0.59		0.40	
			Upper Surface				
x/c	CP	*x/c*	CP	*x/c*	CP	*x/c*	CP
0.020	-2.203	0.000	-0.498	0.000	-0.897**	0.010	-2.464
0.060	-2.255	0.020	-2.361	0.020	-2.335	0.020	-2.506
0.110	-1.185	0.040	-1.996	0.060	-1.694**	0.060	-2.481
0.200	-1.456	0.060	-2.274	0.090	-2.370	0.110	-1.446
0.230	-0.556	0.090	-2.277	0.110	-2.363	0.140	-2.386
0.400	-1.458	0.130	-2.277	0.130	-2.319	0.190	-2.233**
0.490	-1.445	0.150	-1.312	0.150	-2.246	0.250	-2.382
0.590	-0.582	0.200	-1.251	0.210	-2.260	0.400	-1.644
0.630	-1.572	0.250	-2.204	0.250	-2.287	0.490	-0.602
0.700	-1.611	0.260	-2.200	0.340	-2.305	0.580	-1.548
0.750	-2.093	0.280	-2.225	0.370	-1.783	0.650	-1.419
0.810	-2.031	0.290	-1.277	0.400	-1.599	0.700	-1.641
0.840	-2.079	0.310	-2.174	0.410	-3.181**	0.750	-1.768
0.900	-1.577	0.320	-2.145	0.430	-1.536	0.800	-1.957
0.960	-1.561	0.340	-1.647	0.440	-1.486	0.830	-1.869
		0.350	-1.339**	0.460	-1.455	0.900	-1.481
		0.370	-1.455	0.490	-1.421	0.960	-1.380
		0.380	-1.441	0.500	-1.451		
		0.400	-1.366	0.520	-1.482		
		0.410	-1.379	0.540	-0.346		
		0.430	-1.375	0.550	-1.481		
		0.440	-1.361	0.580	-1.501		
		0.460	-1.404	0.600	-1.528		
		0.470	-1.424	0.610	-0.533		
		0.490	-1.438	0.650	-1.961		
		0.500	-1.460	0.700	-1.744		
		0.520	-1.456	0.750	-1.706		
		0.530	-0.535	0.820	-1.885		
		0.550	-1.527	0.890	-1.409		
		0.560	-1.531	0.900	-1.444		
		0.580	-1.499	0.960	-1.385		
		0.590	-1.570				
		0.600	-1.565				
		0.640	-1.718				
		0.700	-1.675				
		0.750	-0.218**				
		0.820	-1.760				
		0.870	-1.594				
		0.930	-1.434				
		0.960	-1.448				
			Lower Surface				
0.020	-1.053	0.020	-1.310	0.020	-0.821	0.020	-0.532
0.110	-0.265	0.060	-0.935	0.060	0.052	0.060	-0.898
0.230	-1.115	0.090	-1.006	0.090	-0.029	0.110	-0.944
0.400	-1.133	0.120	-1.085	0.120	-0.150	0.250	-1.210
0.490	-1.094	0.200	-1.092	0.200	-1.085	0.400	-1.191
0.630	0.873**	0.260	-1.136	0.250	-0.009	0.490	-1.191
0.750	-0.058	0.400	-1.122	0.400	-1.137	0.580	-1.160
0.850	-0.979	0.490	-0.174	0.490	-1.170	0.650	0.135
0.900	-0.885	0.580	-0.140	0.580	-1.095	0.750	0.154
0.960	-1.071	0.640	-0.869	0.650	-1.177	0.830	0.446
		0.750	-0.813	0.750	0.372	0.900	0.500
		0.870	-0.752	0.890	-0.662	0.960	0.335
		0.930	-0.829	0.930	-0.757		
		0.960	-0.953	0.960	-0.787		
CN =	0.680		0.837		1.133		1.152

Table E-2. Continued.

Flight 214, Wing sweep = 26°, Time = 9-4-1-000, MINF = 0.808, Camber = 0/10, ALPT = 6.05, BETA = -0.07, QINF = 297.8, RNPU = 2.4E+06, CNWP = 0.4134

η = 0.93		0.76		0.59		0.40	
			Upper Surface				
x/c	CP	x/c	CP	x/c	CP	x/c	CP
0.020	-0.880	0.000	0.760	0.000	0.288**	0.010	-1.175
0.060	-0.887	0.020	-1.027	0.020	-1.050	0.020	-1.237
0.110	-0.681	0.040	-0.820	0.060	-0.342**	0.060	-1.184
0.200	-0.288	0.060	-0.976	0.090	-1.074	0.110	-1.099
0.230	-0.336	0.090	-0.968	0.110	-1.065	0.140	-1.096
0.400	-0.289	0.130	-0.981	0.130	-1.023	0.190	-2.190**
0.490	-0.269	0.150	-0.964	0.150	-0.963	0.250	-1.107
0.590	-0.352	0.200	-0.852	0.210	-0.969	0.400	-0.390
0.630	-0.388	0.250	-0.913	0.250	-1.005	0.490	-0.366
0.700	-0.429	0.260	-0.866	0.340	-0.397	0.580	-0.393
0.750	-0.880	0.280	-0.433	0.370	-0.323	0.650	-0.486
0.810	-0.865	0.290	-0.279	0.400	-0.266	0.700	-0.471
0.840	-0.942	0.310	-0.238	0.410	-3.113**	0.750	-0.591
0.900	-0.328	0.320	-0.256	0.430	-0.330	0.800	-0.968
0.960	-0.322	0.340	-0.237	0.440	-0.307	0.830	-0.654
		0.350	-0.110**	0.460	-0.334	0.900	-0.418
		0.370	-0.264	0.490	-0.310	0.960	-0.347
		0.380	-0.312	0.500	-0.360		
		0.400	-0.255	0.520	-0.357		
		0.410	-0.325	0.540	-0.386		
		0.430	-0.301	0.550	-0.362		
		0.440	-0.284	0.580	-0.360		
		0.460	-0.353	0.600	-0.414		
		0.470	-0.339	0.610	-0.405		
		0.490	-0.341	0.650	-0.844		
		0.500	-0.352	0.700	-0.638		
		0.520	-0.353	0.750	-0.627		
		0.530	-0.369	0.820	-0.636		
		0.550	-0.404	0.890	-0.285		
		0.560	-0.410	0.900	-0.343		
		0.580	-0.367	0.960	-0.278		
		0.590	-0.428				
		0.600	-0.384				
		0.640	-0.626				
		0.700	-0.574				
		0.750	0.000**				
		0.820	-0.604				
		0.870	-0.400				
		0.930	-0.280				
		0.960	-0.291				
			Lower Surface				
0.020	0.012	0.020	0.214	0.020	0.227	0.020	0.516
0.110	-0.086	0.060	0.178	0.060	0.204	0.060	0.019
0.230	0.022	0.090	0.068	0.090	0.126	0.110	0.159
0.400	0.002	0.120	0.005	0.120	-0.096	0.250	-0.120
0.490	0.047	0.200	0.027	0.200	0.023	0.400	-0.091
0.630	0.835**	0.260	-0.045	0.250	-0.047	0.490	-0.092
0.750	0.169	0.400	-0.005	0.400	-0.017	0.580	-0.052
0.850	0.183	0.490	0.010	0.490	-0.048	0.650	0.141
0.900	0.293	0.580	0.062	0.580	0.042	0.750	0.351
0.960	0.110	0.640	0.277	0.650	-0.041	0.830	0.442
		0.750	0.344	0.750	0.376	0.900	0.518
		0.870	0.384	0.890	0.482	0.960	0.351
		0.930	0.309	0.930	0.368		
		0.960	0.185	0.960	0.409		
CN =	0.523		0.675		0.696		0.775

Table E-2. Continued.

Flight 214, Wing sweep = 26°, Time = 9-4-8-500, MINF = 0.819, Camber = 0/11, ALPT = 7.18, BETA = -0.21, QINF = 305.6, RNPU = 2.5E+06, CNWP = 0.5709

η = 0.93		0.76		0.59		0.40	
			Upper Surface				
x/c	CP	*x/c*	CP	*x/c*	CP	*x/c*	CP
0.020	-0.971	0.000	0.695	0.000	0.319**	0.010	-1.271
0.060	-1.059	0.020	-1.141	0.020	-1.097	0.020	-1.298
0.110	-0.991	0.040	-0.416	0.060	-0.429**	0.060	-1.247
0.200	-0.713	0.060	-1.062	0.090	-1.169	0.110	-1.176
0.230	-0.664	0.090	-1.072	0.110	-1.148	0.140	-1.180
0.400	-0.267	0.130	-1.074	0.130	-1.114	0.190	-2.131**
0.490	-0.251	0.150	-1.052	0.150	-1.059	0.250	-1.180
0.590	-0.351	0.200	-0.997	0.210	-1.054	0.400	-0.875
0.630	-0.403	0.250	-1.010	0.250	-1.093	0.490	-0.577
0.700	-0.415	0.260	-1.014	0.340	-1.137	0.580	-0.424
0.750	-1.060	0.280	-1.025	0.370	-1.104	0.650	-0.461
0.810	-1.008	0.290	-1.024	0.400	-1.030	0.700	-0.449
0.840	-1.052	0.310	-0.995	0.410	-3.030**	0.750	-0.583
0.900	-0.477	0.320	-0.995	0.430	-1.086	0.800	-0.770
0.960	-0.470	0.340	-1.024	0.440	-1.074	0.830	-0.595
		0.350	-0.430**	0.460	-1.044	0.900	-0.326
		0.370	-1.001	0.490	-0.616	0.960	-0.277
		0.380	-1.068	0.500	-0.517		
		0.400	-0.966	0.520	-0.441		
		0.410	-1.011	0.540	-0.385		
		0.430	-0.914	0.550	-0.333		
		0.440	-0.586	0.580	-0.306		
		0.460	-0.406	0.600	-0.311		
		0.470	-0.348	0.610	-0.273		
		0.490	-0.292	0.650	-0.653		
		0.500	-0.257	0.700	-0.409		
		0.520	-0.218	0.750	-0.463		
		0.530	-0.212	0.820	-0.893		
		0.550	-0.244	0.890	-0.238		
		0.560	-0.224	0.900	-0.269		
		0.580	-0.238	0.960	-0.195		
		0.590	-0.288				
		0.600	-0.293				
		0.640	-0.426				
		0.700	-0.456				
		0.750	-0.014**				
		0.820	-0.582				
		0.870	-0.515				
		0.930	-0.327				
		0.960	-0.301				
			Lower Surface				
0.020	0.062	0.020	0.280	0.020	0.344	0.020	0.585
0.110	-0.068	0.060	0.200	0.060	0.265	0.060	0.033
0.230	0.018	0.090	0.129	0.090	0.174	0.110	0.204
0.400	0.019	0.120	0.051	0.120	-0.048	0.250	-0.061
0.490	0.049	0.200	0.052	0.200	0.051	0.400	-0.057
0.630	0.817**	0.260	-0.012	0.250	0.000	0.490	-0.054
0.750	0.139	0.400	0.019	0.400	0.002	0.580	-0.020
0.850	0.180	0.490	0.031	0.490	-0.002	0.650	0.138
0.900	0.256	0.580	0.057	0.580	0.048	0.750	0.378
0.960	0.081	0.640	0.267	0.650	-0.022	0.830	0.457
		0.750	0.346	0.750	0.391	0.900	0.534
		0.870	0.401	0.890	0.488	0.960	0.364
		0.930	0.319	0.930	0.405		
		0.960	0.211	0.960	0.368		
CN =	0.640		0.803		0.862		0.885

Table E-2. Continued.

Flight 214, Wing sweep = 26°, Time = 9-4-16-500, MINF = 0.813, Camber = 0/10, ALPT = 7.96, BETA = 0.02, QINF = 301.2, RNPU = 2.4E+06, CNWP = 0.6279

η = 0.93		0.76		0.59		0.40	
			Upper Surface				
x/c	CP	*x/c*	CP	*x/c*	CP	*x/c*	CP
0.020	-1.097	0.000	0.637	0.000	0.228**	0.010	-1.337
0.060	-1.148	0.020	-1.197	0.020	-1.218	0.020	-1.356
0.110	-1.072	0.040	-0.015	0.060	-0.413**	0.060	-1.353
0.200	-0.834	0.060	-1.180	0.090	-1.239	0.110	-1.307
0.230	-0.729	0.090	-1.145	0.110	-1.240	0.140	-1.296
0.400	-0.360	0.130	-1.144	0.130	-1.195	0.190	-2.160**
0.490	-0.255	0.150	-1.135	0.150	-1.155	0.250	-1.302
0.590	-0.339	0.200	-1.076	0.210	-1.123	0.400	-0.934
0.630	-0.399	0.250	-1.109	0.250	-1.176	0.490	-0.767
0.700	-0.432	0.260	-1.086	0.340	-1.221	0.580	-0.633
0.750	-1.061	0.280	-1.113	0.370	-1.200	0.650	-0.531
0.810	-0.993	0.290	-1.113	0.400	-1.163	0.700	-0.515
0.840	-1.066	0.310	-1.069	0.410	-3.073**	0.750	-0.609
0.900	-0.480	0.320	-1.105	0.430	-1.183	0.800	-0.488
0.960	-0.511	0.340	-1.097	0.440	-1.154	0.830	-0.373
		0.350	-0.438**	0.460	-1.146	0.900	-0.197
		0.370	-1.077	0.490	-1.098	0.960	-0.171
		0.380	-1.142	0.500	-1.170		
		0.400	-1.078	0.520	-1.163		
		0.410	-1.104	0.540	-0.923		
		0.430	-1.069	0.550	-0.732		
		0.440	-1.018	0.580	-0.556		
		0.460	-1.102	0.600	-0.530		
		0.470	-1.103	0.610	-0.435		
		0.490	-1.061	0.650	-0.596		
		0.500	-0.723	0.700	-0.375		
		0.520	-0.555	0.750	-0.447		
		0.530	-0.413	0.820	-0.532		
		0.550	-0.409	0.890	-0.148		
		0.560	-0.329	0.900	-0.168		
		0.580	-0.297	0.960	-0.102		
		0.590	-0.296				
		0.600	-0.260				
		0.640	-0.320				
		0.700	-0.400				
		0.750	0.023**				
		0.820	-0.748				
		0.870	-0.438				
		0.930	-0.258				
		0.960	-0.257				
			Lower Surface				
0.020	0.173	0.020	0.380	0.020	0.397	0.020	0.656
0.110	-0.013	0.060	0.256	0.060	0.318	0.060	0.042
0.230	0.037	0.090	0.176	0.090	0.225	0.110	0.257
0.400	0.024	0.120	0.114	0.120	0.001	0.250	-0.020
0.490	0.051	0.200	0.086	0.200	0.088	0.400	-0.006
0.630	0.830**	0.260	0.025	0.250	0.052	0.490	-0.013
0.750	0.155	0.400	0.064	0.400	0.048	0.580	0.005
0.850	0.172	0.490	0.072	0.490	0.006	0.650	0.183
0.900	0.257	0.580	0.095	0.580	0.089	0.750	0.392
0.960	0.057	0.640	0.290	0.650	-0.007	0.830	0.485
		0.750	0.351	0.750	0.398	0.900	0.539
		0.870	0.404	0.890	0.496	0.960	0.359
		0.930	0.349	0.930	0.419		
		0.960	0.220	0.960	0.430		
CN =	0.691		0.915		0.948		0.964

Table E-2. Continued.

Flight 216, Wing sweep = 26°, Time = 10-58-39-500, MINF = 0.806, Camber = 10/19, ALPT = 3.04, BETA = -0.56, QINF = 305.3, RNPU = 2.5E+06, CNWP = 0.4224

η = 0.93		0.76		0.59		0.40	
			Upper Surface				
x/c	CP	*x/c*	CP	*x/c*	CP	*x/c*	CP
0.020	0.548	0.000	0.027	0.000	-0.002**	0.010	0.419
0.060	0.097	0.020	0.378	0.020	0.573	0.020	0.272
0.110	-0.193	0.040	0.415	0.060	0.593**	0.060	-0.253
0.200	-0.295	0.060	-0.049	0.090	-0.274	0.110	-0.649
0.230	-0.343	0.090	-0.265	0.110	-0.568	0.140	-1.102
0.400	-0.242	0.130	-0.542	0.130	-2.199**	0.190	-2.199**
0.490	-0.235	0.150	-0.858	0.150	-1.023	0.250	-0.343
0.590	-0.338	0.200	-0.902	0.210	-0.937	0.400	-0.368
0.630	-0.356	0.250	-0.394	0.250	-0.327	0.490	-0.359
0.700	-0.424	0.260	-0.332	0.340	-0.374	0.580	-0.388
0.750	-0.473	0.280	-0.378	0.370	-0.401	0.650	-0.465
0.810	-0.437	0.290	-0.378	0.400	-0.369	0.700	-0.451
0.840	-0.436	0.310	-0.364	0.410	-2.236**	0.750	-0.567
0.900	-0.414	0.320	-0.360	0.430	-0.383	0.800	-0.700
0.960	-0.441	0.340	-0.347	0.440	-0.366	0.830	-0.547
		0.350	-0.242**	0.460	-0.381	0.900	-0.547
		0.370	-0.331	0.490	-0.310	0.960	-0.568
		0.380	-0.382	0.500	-0.403		
		0.400	-0.297	0.520	-0.364		
		0.410	-0.382	0.540	-0.371		
		0.430	-0.343	0.550	-0.366		
		0.440	-0.287	0.580	-0.384		
		0.460	-0.385	0.600	-0.375		
		0.470	-0.353	0.610	-0.398		
		0.490	-0.356	0.650	-0.954		
		0.500	-0.359	0.700	-0.648		
		0.520	-0.337	0.750	-0.689		
		0.530	-0.365	0.820	-0.583		
		0.550	-0.409	0.890	-0.522		
		0.560	-0.383	0.900	-0.568		
		0.580	-0.367	0.960	-0.511		
		0.590	-0.415				
		0.600	-0.429				
		0.640	-0.639				
		0.700	-0.601				
		0.750	-0.019**				
		0.820	-0.473				
		0.870	-0.395				
		0.930	-0.409				
		0.960	-0.411				
			Lower Surface				
0.020	-0.980	0.020	-0.849	0.020	-0.759	0.020	-1.068
0.110	-0.275	0.060	-0.402	0.060	-0.509	0.060	0.000
0.230	-0.057	0.090	-0.306	0.090	-0.323	0.110	-0.277
0.400	0.095	0.120	-0.165	0.120	-0.462	0.250	-0.150
0.490	0.147	0.200	-0.057	0.200	-0.112	0.400	-0.091
0.630	1.629**	0.260	-0.056	0.250	-0.001	0.490	-0.055
0.750	0.236	0.400	0.078	0.400	0.045	0.580	0.073
0.850	0.264	0.490	0.116	0.490	-0.013	0.650	0.301
0.900	0.321	0.580	0.207	0.580	0.204	0.750	0.462
0.960	0.124	0.640	0.347	0.650	-0.041	0.830	0.529
		0.750	0.365	0.750	-0.006	0.900	0.597
		0.870	0.398	0.890	0.497	0.960	0.469
		0.930	0.375	0.930	0.430		
		0.960	0.269	0.960	0.583		
CN =	0.377		0.537		0.529		0.577

Table E-2. Continued.

Flight 216, Wing sweep = 26°, Time = 10-58-52-500, MINF = 0.811, Camber = 10/19, ALPT = 8.22, BETA = -0.41, QINF = 310.9, RNPU = 2.5E+06, CNWP = 0.7670

η = 0.93		0.76		0.59		0.40	
			Upper Surface				
x/c	CP	*x/c*	CP	*x/c*	CP	*x/c*	CP
0.020	0.241	0.000	0.666	0.000	0.277**	0.010	-0.176
0.060	-0.219	0.020	-0.047	0.020	0.089	0.020	-0.239
0.110	-0.555	0.040	0.040	0.060	0.150**	0.060	-0.837
0.200	-1.177	0.060	-0.455	0.090	-0.695	0.110	-1.148
0.230	-1.135	0.090	-0.586	0.110	-0.892	0.140	-1.438
0.400	-0.883	0.130	-0.827	0.130	-2.174**	0.190	-2.174**
0.490	-0.675	0.150	-1.099	0.150	-1.281	0.250	-1.425
0.590	-0.393	0.200	-1.185	0.210	-1.240	0.400	-0.909
0.630	-0.400	0.250	-1.272	0.250	-1.234	0.490	-0.686
0.700	-0.435	0.260	-1.179	0.340	-1.261	0.580	-0.667
0.750	-0.857	0.280	-1.238	0.370	-1.260	0.650	-0.683
0.810	-0.752	0.290	-1.230	0.400	-1.210	0.700	-0.696
0.840	-0.768	0.310	-1.176	0.410	-2.211**	0.750	-0.769
0.900	-0.749	0.320	-1.181	0.430	-1.246	0.800	-0.597
0.960	-0.752	0.340	-1.187	0.440	-1.217	0.830	-0.498
		0.350	-0.504**	0.460	-1.236	0.900	-0.419
		0.370	-1.147	0.490	-1.164	0.960	-0.462
		0.380	-1.244	0.500	-1.257		
		0.400	-0.309	0.520	-1.227		
		0.410	-1.202	0.540	-1.225		
		0.430	-1.150	0.550	-1.202		
		0.440	-1.093	0.580	-1.198		
		0.460	-1.228	0.600	-1.089		
		0.470	-1.164	0.610	-0.918		
		0.490	-1.124	0.650	-1.094		
		0.500	-1.163	0.700	-0.771		
		0.520	-1.142	0.750	-0.748		
		0.530	-1.124	0.820	-0.350		
		0.550	-1.160	0.890	-0.340		
		0.560	-1.144	0.900	-0.353		
		0.580	-1.114	0.960	-0.313		
		0.590	-1.159				
		0.600	-1.151				
		0.640	-0.599				
		0.700	-0.470				
		0.750	0.073**				
		0.820	-0.270				
		0.870	-0.292				
		0.930	-0.302				
		0.960	-0.300				
			Lower Surface				
0.020	-0.248	0.020	-0.007	0.020	-0.013	0.020	0.195
0.110	0.055	0.060	0.231	0.060	0.287	0.060	0.057
0.230	0.084	0.090	0.178	0.090	0.239	0.110	0.214
0.400	0.147	0.120	0.229	0.120	-0.034	0.250	0.096
0.490	0.187	0.200	0.082	0.200	0.024	0.400	0.094
0.630	1.585**	0.260	0.172	0.250	0.201	0.490	0.097
0.750	0.311	0.400	0.202	0.400	0.178	0.580	0.187
0.850	0.334	0.490	0.208	0.490	0.079	0.650	0.374
0.900	0.398	0.580	0.279	0.580	0.274	0.750	0.557
0.960	0.151	0.640	0.486	0.650	0.054	0.830	0.633
		0.750	0.514	0.750	0.008	0.900	0.689
		0.870	0.554	0.890	0.629	0.960	0.497
		0.930	0.492	0.930	0.572		
		0.960	0.367	0.960	0.668		
CN =	0.875		1.043		1.073		1.097

Table E-2. Continued.

Flight 216, Wing sweep = 26°, Time = 10-58-55-500, MINF = 0.797, Camber = 10/18, ALPT = 12.26, BETA = 0.77, QINF = 303.6, RNPU = 2.5E+06, CNWP = 0.4877

η = 0.93		0.76		0.59		0.40	
			Upper Surface				
x/c	CP	*x/c*	CP	*x/c*	CP	*x/c*	CP
0.020	-0.240	0.000	0.837	0.000	0.223**	0.010	-0.937
0.060	-0.569	0.020	-0.677	0.020	-0.539	0.020	-1.019
0.110	-0.914	0.040	-0.372	0.060	-0.046**	0.060	-1.180
0.200	-1.393	0.060	-0.840	0.090	-1.105	0.110	-1.459
0.230	-1.283	0.090	-1.044	0.110	-1.302	0.140	-1.712
0.400	-0.830	0.130	-1.214	0.130	-2.248**	0.190	-2.248**
0.490	-0.504	0.150	-1.425	0.150	-1.138	0.250	-1.296
0.590	-0.494	0.200	-1.475	0.210	-1.033	0.400	-1.141
0.630	-0.497	0.250	-1.383	0.250	-0.944	0.490	-0.974
0.700	-0.557	0.260	-1.365	0.340	-0.935	0.580	-0.820
0.750	-0.705	0.280	-1.252	0.370	-0.903	0.650	-0.763
0.810	-0.961	0.290	-1.192	0.400	-0.860	0.700	-0.746
0.840	-1.005	0.310	-1.134	0.410	-2.286**	0.750	-0.680
0.900	-0.492	0.320	-1.132	0.430	-0.868	0.800	-0.762
0.960	-0.665	0.340	-1.010	0.440	-0.811	0.830	-0.664
		0.350	-0.435**	0.460	-0.826	0.900	-0.520
		0.370	-0.993	0.490	-0.775	0.960	-0.514
		0.380	-1.082	0.500	-0.822		
		0.400	-0.352	0.520	-0.783		
		0.410	-1.022	0.540	-0.764		
		0.430	-0.942	0.550	-0.751		
		0.440	-0.886	0.580	-0.735		
		0.460	-0.944	0.600	-0.728		
		0.470	-0.820	0.610	-0.680		
		0.490	-0.756	0.650	-1.010		
		0.500	-0.758	0.700	-0.652		
		0.520	-0.771	0.750	-0.733		
		0.530	-0.693	0.820	-0.640		
		0.550	-0.633	0.890	-0.543		
		0.560	-0.577	0.900	-0.542		
		0.580	-0.547	0.960	-0.459		
		0.590	-0.500				
		0.600	-0.502				
		0.640	-0.401				
		0.700	-0.427				
		0.750	0.072**				
		0.820	-0.306				
		0.870	-0.356				
		0.930	-0.444				
		0.960	-0.464				
			Lower Surface				
0.020	0.093	0.020	0.446	0.020	0.441	0.020	0.596
0.110	0.182	0.060	0.455	0.060	0.511	0.060	0.066
0.230	0.146	0.090	0.369	0.090	0.445	0.110	0.406
0.400	0.187	0.120	0.344	0.120	0.117	0.250	0.252
0.490	0.199	0.200	0.145	0.200	0.083	0.400	0.216
0.630	1.602**	0.260	0.277	0.250	0.329	0.490	0.191
0.750	0.299	0.400	0.267	0.400	0.268	0.580	0.238
0.850	0.320	0.490	0.254	0.490	0.099	0.650	0.398
0.900	0.394	0.580	0.301	0.580	0.310	0.750	0.578
0.960	0.150	0.640	0.486	0.650	0.038	0.830	0.648
		0.750	0.510	0.750	-0.013	0.900	0.708
		0.870	0.553	0.890	0.645	0.960	0.494
		0.930	0.479	0.930	0.557		
		0.960	0.333	0.960	0.637		
CN =	0.967		1.092		1.033		1.318

Table E-2. Continued.

Flight 216, Wing sweep = 26°, Time = 11-0-1-500, MINF = 0.794, Camber = 10/15, ALPT = 3.04, BETA = -0.15, QINF = 295.3, RNPU = 2.4E+06, CNWP = 0.4146

η = 0.93		0.76		0.59		0.40	
			Upper Surface				
x/c	CP	*x/c*	CP	*x/c*	CP	*x/c*	CP
0.020	0.527	0.000	0.079	0.000	0.106**	0.010	0.389
0.060	0.080	0.020	0.361	0.020	0.552	0.020	0.290
0.110	-0.273	0.040	0.389	0.060	0.368**	0.060	-0.317
0.200	-0.324	0.060	-0.090	0.090	-0.306	0.110	-0.698
0.230	-0.365	0.090	-0.306	0.110	-0.597	0.140	-1.164
0.400	-0.264	0.130	-0.593	0.130	-2.265**	0.190	-2.265**
0.490	-0.238	0.150	-0.895	0.150	-1.041	0.250	-0.403
0.590	-0.329	0.200	-0.953	0.210	-0.989	0.400	-0.401
0.630	-0.359	0.250	-0.399	0.250	-0.344	0.490	-0.372
0.700	-0.422	0.260	-0.334	0.340	-0.378	0.580	-0.393
0.750	-0.504	0.280	-0.397	0.370	-0.398	0.650	-0.472
0.810	-0.487	0.290	-0.391	0.400	-0.403	0.700	-0.468
0.840	-0.477	0.310	-0.371	0.410	-2.303**	0.750	-0.582
0.900	-0.368	0.320	-0.383	0.430	-0.418	0.800	-0.681
0.960	-0.389	0.340	-0.372	0.440	-0.385	0.830	-0.520
		0.350	-0.226**	0.460	-0.397	0.900	-0.511
		0.370	-0.341	0.490	-0.358	0.960	-0.530
		0.380	-0.392	0.500	-0.408		
		0.400	-0.320	0.520	-0.368		
		0.410	-0.408	0.540	-0.404		
		0.430	-0.352	0.550	-0.376		
		0.440	-0.291	0.580	-0.388		
		0.460	-0.417	0.600	-0.407		
		0.470	-0.383	0.610	-0.417		
		0.490	-0.382	0.650	-0.870		
		0.500	-0.379	0.700	-0.647		
		0.520	-0.379	0.750	-0.719		
		0.530	-0.368	0.820	-0.551		
		0.550	-0.415	0.890	-0.478		
		0.560	-0.403	0.900	-0.530		
		0.580	-0.378	0.960	-0.463		
		0.590	-0.420				
		0.600	-0.440				
		0.640	-0.664				
		0.700	-0.602				
		0.750	-0.037**				
		0.820	-0.358				
		0.870	-0.366				
		0.930	-0.380				
		0.960	-0.401				
			Lower Surface				
0.020	-0.869	0.020	-0.936	0.020	-0.728	0.020	-1.067
0.110	-0.316	0.060	-0.335	0.060	-0.440	0.060	0.008
0.230	-0.039	0.090	-0.260	0.090	-0.211	0.110	-0.252
0.400	0.103	0.120	-0.129	0.120	-0.374	0.250	-0.142
0.490	0.108	0.200	-0.061	0.200	-0.114	0.400	-0.063
0.630	1.692**	0.260	-0.024	0.250	0.019	0.490	-0.033
0.750	0.206	0.400	0.085	0.400	0.045	0.580	0.069
0.850	0.238	0.490	0.110	0.490	-0.042	0.650	0.312
0.900	0.302	0.580	0.173	0.580	0.208	0.750	0.462
0.960	0.116	0.640	0.337	0.650	-0.075	0.830	0.532
		0.750	0.335	0.750	0.006	0.900	0.604
		0.870	0.341	0.890	0.497	0.960	0.466
		0.930	0.270	0.930	0.438		
		0.960	0.163	0.960	0.530		
CN =	0.372		0.528		0.542		0.605

Table E-2. Continued.

Flight 216, Wing sweep = 26°, Time = 11-1-53-000, MINF = 0.805, Camber = 10/13, ALPT = 2.99, BETA = -0.44, QINF = 304.4, RNPU = 2.5E+06, CNWP = 0.3791

η = 0.93		0.76		0.59		0.40	
			Upper Surface				
x/c	CP	*x/c*	CP	*x/c*	CP	*x/c*	CP
0.020	0.551	0.000	0.034	0.000	-0.028**	0.010	0.423
0.060	0.099	0.020	0.381	0.020	0.577	0.020	0.295
0.110	-0.260	0.040	0.418	0.060	0.528**	0.060	-0.252
0.200	-0.293	0.060	-0.032	0.090	-0.263	0.110	-0.664
0.230	-0.315	0.090	-0.264	0.110	-0.567	0.140	-1.104
0.400	-0.240	0.130	-0.541	0.130	-2.204**	0.190	-2.204**
0.490	-0.233	0.150	-0.855	0.150	-1.000	0.250	-0.369
0.590	-0.325	0.200	-0.903	0.210	-0.947	0.400	-0.367
0.630	-0.351	0.250	-0.393	0.250	-0.319	0.490	-0.372
0.700	-0.393	0.260	-0.317	0.340	-0.373	0.580	-0.377
0.750	-0.514	0.280	-0.368	0.370	-0.385	0.650	-0.454
0.810	-0.479	0.290	-0.368	0.400	-0.368	0.700	-0.435
0.840	-0.476	0.310	-0.360	0.410	-2.241**	0.750	-0.564
0.900	-0.337	0.320	-0.354	0.430	-0.397	0.800	-0.687
0.960	-0.349	0.340	-0.346	0.440	-0.355	0.830	-0.555
		0.350	-0.246**	0.460	-0.380	0.900	-0.538
		0.370	-0.326	0.490	-0.302	0.960	-0.560
		0.380	-0.377	0.500	-0.393		
		0.400	-0.274	0.520	-0.363		
		0.410	-0.378	0.540	-0.385		
		0.430	-0.342	0.550	-0.365		
		0.440	-0.267	0.580	-0.366		
		0.460	-0.399	0.600	-0.389		
		0.470	-0.346	0.610	-0.383		
		0.490	-0.355	0.650	-0.926		
		0.500	-0.358	0.700	-0.652		
		0.520	-0.366	0.750	-0.689		
		0.530	-0.360	0.820	-0.492		
		0.550	-0.409	0.890	-0.486		
		0.560	-0.376	0.900	-0.458		
		0.580	-0.360	0.960	-0.428		
		0.590	-0.414				
		0.600	-0.423				
		0.640	-0.629				
		0.700	-0.593				
		0.750	-0.074**				
		0.820	-0.324				
		0.870	-0.343				
		0.930	-0.383				
		0.960	-0.363				
			Lower Surface				
0.020	-1.006	0.020	-0.880	0.020	-0.759	0.020	-1.057
0.110	-0.300	0.060	-0.409	0.060	-0.495	0.060	0.002
0.230	-0.059	0.090	-0.299	0.090	-0.308	0.110	-0.256
0.400	0.072	0.120	-0.188	0.120	-0.445	0.250	-0.149
0.490	0.106	0.200	-0.059	0.200	-0.117	0.400	-0.082
0.630	1.636**	0.260	-0.065	0.250	0.001	0.490	-0.038
0.750	0.159	0.400	0.058	0.400	0.038	0.580	0.085
0.850	0.187	0.490	0.100	0.490	-0.040	0.650	0.319
0.900	0.244	0.580	0.176	0.580	0.210	0.750	0.466
0.960	0.073	0.640	0.306	0.650	-0.081	0.830	0.533
		0.750	0.270	0.750	-0.019	0.900	0.606
		0.870	0.220	0.890	0.501	0.960	0.469
		0.930	0.206	0.930	0.441		
		0.960	0.102	0.960	0.591		
CN =	0.330		0.460		0.503		0.586

Table E-2. Continued.

Flight 216, Wing sweep = 26°, Time = 11-2-1-000, MINF = 0.808, Camber = 10/13, ALPT = 6.08, BETA = -0.38, QINF = 307.6, RNPU = 2.5E+06, CNWP = 0.5571

η = 0.93		0.76		0.59		0.40	
			Upper Surface				
x/c	CP	*x/c*	CP	*x/c*	CP	*x/c*	CP
0.020	0.375	0.000	0.419	0.000	0.303**	0.010	0.055
0.060	-0.098	0.020	0.124	0.020	0.307	0.020	-0.049
0.110	-0.469	0.040	0.148	0.060	0.234**	0.060	-0.674
0.200	-1.128	0.060	-0.295	0.090	-0.470	0.110	-0.982
0.230	-1.035	0.090	-0.464	0.110	-0.749	0.140	-1.320
0.400	-0.207	0.130	-0.722	0.130	-2.186**	0.190	-2.186**
0.490	-0.218	0.150	-1.020	0.150	-1.170	0.250	-1.082
0.590	-0.324	0.200	-1.102	0.210	-1.167	0.400	-0.585
0.630	-0.372	0.250	-1.169	0.250	-1.132	0.490	-0.495
0.700	-0.406	0.260	-1.078	0.340	-1.123	0.580	-0.472
0.750	-1.122	0.280	-1.130	0.370	-1.114	0.650	-0.534
0.810	-0.876	0.290	-1.113	0.400	-1.082	0.700	-0.523
0.840	-0.823	0.310	-1.055	0.410	-2.223**	0.750	-0.647
0.900	-0.515	0.320	-1.062	0.430	-0.881	0.800	-0.662
0.960	-0.529	0.340	-1.059	0.440	-0.599	0.830	-0.526
		0.350	-0.499**	0.460	-0.520	0.900	-0.526
		0.370	-1.027	0.490	-0.377	0.960	-0.530
		0.380	-1.116	0.500	-0.411		
		0.400	-0.301	0.520	-0.352		
		0.410	-1.067	0.540	-0.342		
		0.430	-0.935	0.550	-0.338		
		0.440	-0.594	0.580	-0.338		
		0.460	-0.519	0.600	-0.335		
		0.470	-0.419	0.610	-0.356		
		0.490	-0.312	0.650	-0.783		
		0.500	-0.298	0.700	-0.596		
		0.520	-0.271	0.750	-0.636		
		0.530	-0.239	0.820	-0.565		
		0.550	-0.283	0.890	-0.438		
		0.560	-0.276	0.900	-0.492		
		0.580	-0.261	0.960	-0.420		
		0.590	-0.299				
		0.600	-0.333				
		0.640	-0.464				
		0.700	-0.499				
		0.750	-0.028**				
		0.820	-0.355				
		0.870	-0.341				
		0.930	-0.395				
		0.960	-0.371				
			Lower Surface				
0.020	-0.896	0.020	-0.387	0.020	-0.242	0.020	-0.133
0.110	-0.041	0.060	0.022	0.060	0.131	0.060	0.026
0.230	0.017	0.090	0.046	0.090	0.110	0.110	0.027
0.400	0.088	0.120	0.093	0.120	-0.149	0.250	0.005
0.490	0.106	0.200	0.012	0.200	-0.059	0.400	0.025
0.630	1.614**	0.260	0.086	0.250	0.107	0.490	0.037
0.750	0.181	0.400	0.125	0.400	0.109	0.580	0.137
0.850	0.209	0.490	0.138	0.490	0.002	0.650	0.339
0.900	0.286	0.580	0.205	0.580	0.232	0.750	0.522
0.960	0.072	0.640	0.396	0.650	-0.043	0.830	0.592
		0.750	0.335	0.750	0.020	0.900	0.653
		0.870	0.322	0.890	0.604	0.960	0.477
		0.930	0.249	0.930	0.547		
		0.960	0.139	0.960	0.613		
CN =	0.609		0.738		0.803		0.875

Table E-2. Continued.

Flight 216, Wing sweep = 26°, Time = 11-2-6-000, MINF = 0.803, Camber = 10/12, ALPT = 9.94, BETA = 0.02, QINF = 303.7, RNPU = 2.5E+06, CNWP = 0.6162

η = 0.93		0.76		0.59		0.40	
			Upper Surface				
x/c	CP	*x/c*	CP	*x/c*	CP	*x/c*	CP
0.020	-0.001	0.000	0.808	0.000	0.390**	0.010	-0.515
0.060	-0.424	0.020	-0.333	0.020	-0.204	0.020	-0.434
0.110	-0.789	0.040	-0.208	0.060	-0.120**	0.060	-1.027
0.200	-1.239	0.060	-0.654	0.090	-0.932	0.110	-1.345
0.230	-1.185	0.090	-0.851	0.110	-1.121	0.140	-1.583
0.400	-0.909	0.130	-1.032	0.130	-2.216**	0.190	-2.216**
0.490	-0.331	0.150	-1.253	0.150	-1.424	0.250	-1.577
0.590	-0.366	0.200	-1.330	0.210	-1.416	0.400	-1.194
0.630	-0.433	0.250	-1.408	0.250	-1.396	0.490	-0.948
0.700	-0.462	0.260	-1.304	0.340	-1.415	0.580	-0.636
0.750	-1.147	0.280	-1.376	0.370	-1.132	0.650	-0.474
0.810	-1.143	0.290	-1.376	0.400	-0.901	0.700	-0.461
0.840	-1.190	0.310	-1.329	0.410	-2.253**	0.750	-0.521
0.900	-0.689	0.320	-1.328	0.430	-0.895	0.800	-0.623
0.960	-0.565	0.340	-1.298	0.440	-0.834	0.830	-0.658
		0.350	-0.520**	0.460	-0.838	0.900	-0.416
		0.370	-0.893	0.490	-0.750	0.960	-0.446
		0.380	-0.905	0.500	-0.816		
		0.400	-0.299	0.520	-0.747		
		0.410	-0.824	0.540	-0.776		
		0.430	-0.771	0.550	-0.751		
		0.440	-0.722	0.580	-0.747		
		0.460	-0.792	0.600	-0.716		
		0.470	-0.736	0.610	-0.685		
		0.490	-0.714	0.650	-0.914		
		0.500	-0.702	0.700	-0.631		
		0.520	-0.722	0.750	-0.697		
		0.530	-0.684	0.820	-0.528		
		0.550	-0.699	0.890	-0.499		
		0.560	-0.668	0.900	-0.513		
		0.580	-0.651	0.960	-0.436		
		0.590	-0.657				
		0.600	-0.630				
		0.640	-0.514				
		0.700	-0.496				
		0.750	0.017**				
		0.820	-0.381				
		0.870	-0.397				
		0.930	-0.391				
		0.960	-0.396				
			Lower Surface				
0.020	-0.086	0.020	0.206	0.020	0.198	0.020	0.402
0.110	0.078	0.060	0.317	0.060	0.368	0.060	0.053
0.230	0.101	0.090	0.241	0.090	0.313	0.110	0.254
0.400	0.090	0.120	0.266	0.120	0.028	0.250	0.155
0.490	0.099	0.200	0.101	0.200	0.027	0.400	0.135
0.630	1.633**	0.260	0.186	0.250	0.244	0.490	0.131
0.750	0.150	0.400	0.188	0.400	0.187	0.580	0.196
0.850	0.186	0.490	0.171	0.490	0.040	0.650	0.371
0.900	0.277	0.580	0.216	0.580	0.255	0.750	0.561
0.960	0.059	0.640	0.399	0.650	-0.016	0.830	0.619
		0.750	0.335	0.750	0.018	0.900	0.677
		0.870	0.299	0.890	0.625	0.960	0.475
		0.930	0.244	0.930	0.523		
		0.960	0.110	0.960	0.565		
CN =	0.856		0.953		1.048		1.197

Table E-2. Continued.

Flight 216, Wing sweep = 26°, Time = 11-3-30-000, MINF = 0.796, Camber = 10/12, ALPT = 3.02, BETA = -0.21, QINF = 297.9, RNPU = 2.5E+06, CNWP = 0.3846

η = 0.93		0.76		0.59		0.40	
			Upper Surface				
x/c	CP	*x/c*	CP	*x/c*	CP	*x/c*	CP
0.020	0.535	0.000	0.034	0.000	-0.005**	0.010	0.427
0.060	0.097	0.020	0.423	0.020	0.561	0.020	0.255
0.110	-0.293	0.040	0.393	0.060	0.535**	0.060	-0.283
0.200	-0.317	0.060	-0.069	0.090	-0.304	0.110	-0.668
0.230	-0.335	0.090	-0.291	0.110	-0.593	0.140	-1.150
0.400	-0.265	0.130	-0.577	0.130	-2.257**	0.190	-2.257**
0.490	-0.254	0.150	-0.890	0.150	-1.034	0.250	-0.389
0.590	-0.337	0.200	-0.944	0.210	-0.982	0.400	-0.387
0.630	-0.367	0.250	-0.419	0.250	-0.352	0.490	-0.380
0.700	-0.414	0.260	-0.342	0.340	-0.401	0.580	-0.390
0.750	-0.546	0.280	-0.398	0.370	-0.398	0.650	-0.479
0.810	-0.544	0.290	-0.381	0.400	-0.351	0.700	-0.465
0.840	-0.547	0.310	-0.382	0.410	-2.294**	0.750	-0.580
0.900	-0.311	0.320	-0.376	0.430	-0.410	0.800	-0.664
0.960	-0.326	0.340	-0.358	0.440	-0.372	0.830	-0.535
		0.350	-0.246**	0.460	-0.393	0.900	-0.518
		0.370	-0.345	0.490	-0.320	0.960	-0.536
		0.380	-0.399	0.500	-0.406		
		0.400	-0.284	0.520	-0.376		
		0.410	-0.394	0.540	-0.383		
		0.430	-0.354	0.550	-0.390		
		0.440	-0.299	0.580	-0.396		
		0.460	-0.397	0.600	-0.399		
		0.470	-0.364	0.610	-0.423		
		0.490	-0.371	0.650	-0.989		
		0.500	-0.381	0.700	-0.663		
		0.520	-0.379	0.750	-0.708		
		0.530	-0.376	0.820	-0.490		
		0.550	-0.422	0.890	-0.449		
		0.560	-0.395	0.900	-0.457		
		0.580	-0.379	0.960	-0.399		
		0.590	-0.428				
		0.600	-0.447				
		0.640	-0.654				
		0.700	-0.578				
		0.750	-0.084**				
		0.820	-0.324				
		0.870	-0.355				
		0.930	-0.373				
		0.960	-0.346				
			Lower Surface				
0.020	-0.963	0.020	-0.929	0.020	-0.749	0.020	-1.091
0.110	-0.348	0.060	-0.399	0.060	-0.433	0.060	-0.003
0.230	-0.065	0.090	-0.292	0.090	-0.277	0.110	-0.307
0.400	0.050	0.120	-0.153	0.120	-0.416	0.250	-0.143
0.490	0.088	0.200	-0.057	0.200	-0.118	0.400	-0.081
0.630	1.667**	0.260	-0.042	0.250	-0.007	0.490	-0.044
0.750	0.143	0.400	0.055	0.400	0.024	0.580	0.072
0.850	0.179	0.490	0.083	0.490	-0.060	0.650	0.299
0.900	0.239	0.580	0.152	0.580	0.188	0.750	0.462
0.960	0.083	0.640	0.293	0.650	-0.102	0.830	0.523
		0.750	0.251	0.750	-0.009	0.900	0.603
		0.870	0.211	0.890	0.478	0.960	0.457
		0.930	0.191	0.930	0.424		
		0.960	0.092	0.960	0.563		
CN =	0.333		0.468		0.516		0.589

Table E-2. Continued.

Flight 216, Wing sweep = 26°, Time = 11-3-39-500, MINF = 0.804, Camber = 10/13, ALPT = 8.04, BETA = -0.33, QINF = 304.8, RNPU = 2.5E+06, CNWP = 0.7229

η = 0.93		0.76		0.59		0.40	
			Upper Surface				
x/c	CP	*x/c*	CP	*x/c*	CP	*x/c*	CP
0.020	0.215	0.000	0.663	0.000	0.199**	0.010	-0.208
0.060	-0.268	0.020	-0.055	0.020	0.075	0.020	-0.272
0.110	-0.529	0.040	0.019	0.060	0.215**	0.060	-0.821
0.200	-1.214	0.060	-0.471	0.090	-0.727	0.110	-1.179
0.230	-1.148	0.090	-0.622	0.110	-0.917	0.140	-1.483
0.400	-0.894	0.130	-0.858	0.130	-2.211**	0.190	-2.211**
0.490	-0.495	0.150	-1.132	0.150	-1.281	0.250	-1.454
0.590	-0.360	0.200	-1.211	0.210	-1.281	0.400	-0.908
0.630	-0.401	0.250	-1.293	0.250	-1.273	0.490	-0.698
0.700	-0.419	0.260	-1.203	0.340	-1.287	0.580	-0.657
0.750	-1.192	0.280	-1.271	0.370	-1.285	0.650	-0.685
0.810	-1.149	0.290	-1.262	0.400	-1.257	0.700	-0.697
0.840	-1.203	0.310	-1.207	0.410	-2.248**	0.750	-0.764
0.900	-0.653	0.320	-1.217	0.430	-1.293	0.800	-0.576
0.960	-0.684	0.340	-1.222	0.440	-1.239	0.830	-0.462
		0.350	-0.527**	0.460	-1.274	0.900	-0.418
		0.370	-1.177	0.490	-1.195	0.960	-0.431
		0.380	-1.276	0.500	-1.280		
		0.400	-0.290	0.520	-1.242		
		0.410	-1.233	0.540	-1.258		
		0.430	-1.181	0.550	-1.221		
		0.440	-1.122	0.580	-1.161		
		0.460	-1.260	0.600	-0.953		
		0.470	-1.202	0.610	-0.798		
		0.490	-1.170	0.650	-0.976		
		0.500	-1.226	0.700	-0.625		
		0.520	-1.173	0.750	-0.636		
		0.530	-1.155	0.820	-0.327		
		0.550	-1.182	0.890	-0.315		
		0.560	-1.174	0.900	-0.305		
		0.580	-1.138	0.960	-0.254		
		0.590	-1.181				
		0.600	-1.172				
		0.640	-0.467				
		0.700	-0.458				
		0.750	0.021**				
		0.820	-0.309				
		0.870	-0.266				
		0.930	-0.276				
		0.960	-0.260				
			Lower Surface				
0.020	-0.280	0.020	-0.011	0.020	-0.005	0.020	0.203
0.110	0.035	0.060	0.224	0.060	0.285	0.060	0.050
0.230	0.071	0.090	0.163	0.090	0.231	0.110	0.150
0.400	0.120	0.120	0.219	0.120	-0.042	0.250	0.093
0.490	0.110	0.200	0.069	0.200	0.011	0.400	0.088
0.630	1.624**	0.260	0.147	0.250	0.190	0.490	0.098
0.750	0.181	0.400	0.169	0.400	0.173	0.580	0.183
0.850	0.208	0.490	0.171	0.490	0.044	0.650	0.367
0.900	0.281	0.580	0.228	0.580	0.251	0.750	0.542
0.960	0.048	0.640	0.420	0.650	0.002	0.830	0.613
		0.750	0.355	0.750	0.001	0.900	0.675
		0.870	0.331	0.890	0.634	0.960	0.488
		0.930	0.297	0.930	0.562		
		0.960	0.161	0.960	0.682		
CN =	0.842		0.977		1.042		1.089

Table E-2. Continued.

Flight 216, Wing sweep = 26°, Time = 11-3-40-500, MINF = 0.802, Camber = 10/12, ALPT = 9.90, BETA = -0.30, QINF = 304.3, RNPU = 2.5E+06, CNWP = 0.6857

η = 0.93		0.76		0.59		0.40	
			Upper Surface				
x/c	CP	*x/c*	CP	*x/c*	CP	*x/c*	CP
0.020	-0.005	0.000	0.826	0.000	0.215**	0.010	-0.619
0.060	-0.428	0.020	-0.332	0.020	-0.201	0.020	-0.435
0.110	-0.803	0.040	-0.203	0.060	0.114**	0.060	-1.020
0.200	-1.246	0.060	-0.664	0.090	-0.936	0.110	-1.323
0.230	-1.215	0.090	-0.839	0.110	-1.108	0.140	-1.592
0.400	-0.769	0.130	-1.024	0.130	-2.222**	0.190	-2.222**
0.490	-0.485	0.150	-1.247	0.150	-1.410	0.250	-1.597
0.590	-0.350	0.200	-1.319	0.210	-1.422	0.400	-1.172
0.630	-0.432	0.250	-1.073	0.250	-1.388	0.490	-0.918
0.700	-0.441	0.260	-1.037	0.340	-1.430	0.580	-0.615
0.750	-0.930	0.280	-1.036	0.370	-1.234	0.650	-0.454
0.810	-0.811	0.290	-0.989	0.400	-0.851	0.700	-0.441
0.840	-0.879	0.310	-0.844	0.410	-2.259**	0.750	-0.507
0.900	-0.568	0.320	-0.839	0.430	-0.889	0.800	-0.568
0.960	-0.509	0.340	-1.034	0.440	-0.813	0.830	-0.574
		0.350	-0.463**	0.460	-0.817	0.900	-0.379
		0.370	-0.753	0.490	-0.736	0.960	-0.424
		0.380	-0.840	0.500	-0.799		
		0.400	-0.268	0.520	-0.772		
		0.410	-0.845	0.540	-0.770		
		0.430	-0.750	0.550	-0.730		
		0.440	-0.785	0.580	-0.735		
		0.460	-0.771	0.600	-0.719		
		0.470	-0.779	0.610	-0.686		
		0.490	-0.682	0.650	-0.959		
		0.500	-0.744	0.700	-0.650		
		0.520	-0.694	0.750	-0.706		
		0.530	-0.688	0.820	-0.578		
		0.550	-0.678	0.890	-0.530		
		0.560	-0.642	0.900	-0.492		
		0.580	-0.631	0.960	-0.423		
		0.590	-0.650				
		0.600	-0.624				
		0.640	-0.494				
		0.700	-0.480				
		0.750	0.000**				
		0.820	-0.342				
		0.870	-0.341				
		0.930	-0.393				
		0.960	-0.408				
			Lower Surface				
0.020	-0.057	0.020	0.228	0.020	0.232	0.020	0.430
0.110	0.097	0.060	0.310	0.060	0.399	0.060	0.080
0.230	0.119	0.090	0.271	0.090	0.336	0.110	0.293
0.400	0.113	0.120	0.285	0.120	0.047	0.250	0.181
0.490	0.118	0.200	0.116	0.200	0.040	0.400	0.158
0.630	1.620**	0.260	0.205	0.250	0.256	0.490	0.150
0.750	0.151	0.400	0.199	0.400	0.206	0.580	0.215
0.850	0.197	0.490	0.164	0.490	0.037	0.650	0.390
0.900	0.274	0.580	0.224	0.580	0.274	0.750	0.574
0.960	0.062	0.640	0.410	0.650	0.003	0.830	0.637
		0.750	0.345	0.750	0.067	0.900	0.681
		0.870	0.327	0.890	0.622	0.960	0.485
		0.930	0.248	0.930	0.519		
		0.960	0.111	0.960	0.628		
CN =	0.814		0.905		1.072		1.199

Table E-2. Continued.

Flight 216, Wing sweep = 26°, Time = 11-5-2-000, MINF = 0.804, Camber = 10/9, ALPT = 3.15, BETA = -0.12, QINF = 304.3, RNPU = 2.5E+06, CNWP = 0.3412

η = 0.93		0.76		0.59		0.40	
Upper Surface							
x/c	CP	*x/c*	CP	*x/c*	CP	*x/c*	CP
0.020	0.521	0.000	0.040	0.000	-0.056**	0.010	0.390
0.060	0.068	0.020	0.378	0.020	0.554	0.020	0.267
0.110	-0.279	0.040	0.399	0.060	0.567**	0.060	-0.254
0.200	-0.341	0.060	-0.071	0.090	-0.305	0.110	-0.657
0.230	-0.328	0.090	-0.286	0.110	-0.590	0.140	-1.112
0.400	-0.255	0.130	-0.577	0.130	-2.212**	0.190	-2.212**
0.490	-0.252	0.150	-0.871	0.150	-1.016	0.250	-0.392
0.590	-0.348	0.200	-0.934	0.210	-0.979	0.400	-0.390
0.630	-0.355	0.250	-0.389	0.250	-0.334	0.490	-0.366
0.700	-0.405	0.260	-0.333	0.340	-0.381	0.580	-0.410
0.750	-1.001	0.280	-0.382	0.370	-0.407	0.650	-0.466
0.810	-0.960	0.290	-0.391	0.400	-0.398	0.700	-0.448
0.840	-0.972	0.310	-0.376	0.410	-2.249**	0.750	-0.571
0.900	-0.275	0.320	-0.373	0.430	-0.397	0.800	-0.640
0.960	-0.239	0.340	-0.347	0.440	-0.362	0.830	-0.509
		0.350	-0.258**	0.460	-0.403	0.900	-0.510
		0.370	-0.352	0.490	-0.309	0.960	-0.527
		0.380	-0.385	0.500	-0.416		
		0.400	-0.340	0.520	-0.371		
		0.410	-0.401	0.540	-0.378		
		0.430	-0.359	0.550	-0.388		
		0.440	-0.308	0.580	-0.405		
		0.460	-0.392	0.600	-0.397		
		0.470	-0.381	0.610	-0.413		
		0.490	-0.359	0.650	-0.947		
		0.500	-0.380	0.700	-0.671		
		0.520	-0.389	0.750	-0.711		
		0.530	-0.376	0.820	-0.477		
		0.550	-0.416	0.890	-0.430		
		0.560	-0.399	0.900	-0.418		
		0.580	-0.389	0.960	-0.367		
		0.590	-0.432				
		0.600	-0.456				
		0.640	-0.637				
		0.700	-0.609				
		0.750	-0.114**				
		0.820	-0.328				
		0.870	-0.333				
		0.930	-0.405				
		0.960	-0.425				
Lower Surface							
0.020	-0.986	0.020	-0.903	0.020	-0.782	0.020	-1.059
0.110	-0.362	0.060	-0.405	0.060	-0.499	0.060	-0.006
0.230	-0.078	0.090	-0.310	0.090	-0.284	0.110	-0.279
0.400	0.027	0.120	-0.161	0.120	-0.425	0.250	-0.152
0.490	0.047	0.200	-0.077	0.200	-0.133	0.400	-0.082
0.630	1.628**	0.260	-0.073	0.250	-0.018	0.490	-0.061
0.750	0.076	0.400	0.024	0.400	0.006	0.580	0.063
0.850	0.137	0.490	0.077	0.490	-0.077	0.650	0.285
0.900	0.195	0.580	0.131	0.580	0.188	0.750	0.458
0.960	0.076	0.640	0.257	0.650	-0.139	0.830	0.533
		0.750	0.179	0.750	-0.012	0.900	0.611
		0.870	0.158	0.890	0.468	0.960	0.447
		0.930	0.151	0.930	0.411		
		0.960	0.069	0.960	0.553		
CN =	0.357		0.445		0.491		0.578

Table E-2. Continued.

Flight 216, Wing sweep = 26°, Time = 11-5-11-500, MINF = 0.803, Camber = 10/10, ALPT = 5.96, BETA = -0.56, QINF = 304.2, RNPU = 2.5E+06, CNWP = 0.5427

η = 0.93		0.76		0.59		0.40	
			Upper Surface				
x/c	CP	*x/c*	CP	*x/c*	CP	*x/c*	CP
0.020	0.381	0.000	0.393	0.000	0.114**	0.010	0.070
0.060	-0.086	0.020	0.176	0.020	0.336	0.020	-0.036
0.110	-0.458	0.040	0.194	0.060	0.423**	0.060	-0.688
0.200	-1.147	0.060	-0.274	0.090	-0.491	0.110	-0.960
0.230	-1.053	0.090	-0.458	0.110	-0.764	0.140	-1.315
0.400	-0.223	0.130	-0.726	0.130	-2.217**	0.190	-2.217**
0.490	-0.237	0.150	-1.025	0.150	-1.165	0.250	-0.974
0.590	-0.346	0.200	-1.109	0.210	-1.168	0.400	-0.529
0.630	-0.383	0.250	-1.164	0.250	-1.136	0.490	-0.461
0.700	-0.413	0.260	-1.083	0.340	-1.112	0.580	-0.462
0.750	-1.037	0.280	-1.132	0.370	-1.101	0.650	-0.526
0.810	-0.991	0.290	-1.106	0.400	-0.758	0.700	-0.515
0.840	-1.034	0.310	-1.051	0.410	-2.254**	0.750	-0.639
0.900	-0.381	0.320	-1.062	0.430	-0.498	0.800	-0.649
0.960	-0.359	0.340	-1.054	0.440	-0.408	0.830	-0.529
		0.350	-0.522**	0.460	-0.385	0.900	-0.511
		0.370	-1.016	0.490	-0.284	0.960	-0.527
		0.380	-1.094	0.500	-0.357		
		0.400	-0.353	0.520	-0.329		
		0.410	-0.573	0.540	-0.339		
		0.430	-0.404	0.550	-0.348		
		0.440	-0.328	0.580	-0.365		
		0.460	-0.343	0.600	-0.357		
		0.470	-0.270	0.610	-0.366		
		0.490	-0.259	0.650	-0.926		
		0.500	-0.265	0.700	-0.613		
		0.520	-0.265	0.750	-0.671		
		0.530	-0.269	0.820	-0.565		
		0.550	-0.328	0.890	-0.445		
		0.560	-0.304	0.900	-0.456		
		0.580	-0.309	0.960	-0.417		
		0.590	-0.357				
		0.600	-0.391				
		0.640	-0.537				
		0.700	-0.525				
		0.750	-0.067**				
		0.820	-0.347				
		0.870	-0.372				
		0.930	-0.453				
		0.960	-0.414				
			Lower Surface				
0.020	-0.989	0.020	-0.425	0.020	-0.312	0.020	-0.172
0.110	-0.067	0.060	0.009	0.060	0.113	0.060	0.020
0.230	0.000	0.090	0.012	0.090	0.096	0.110	0.001
0.400	0.064	0.120	0.088	0.120	-0.166	0.250	-0.002
0.490	0.072	0.200	-0.001	0.200	-0.060	0.400	0.015
0.630	1.626**	0.260	0.074	0.250	0.095	0.490	0.031
0.750	0.113	0.400	0.117	0.400	0.100	0.580	0.133
0.850	0.148	0.490	0.118	0.490	-0.029	0.650	0.341
0.900	0.224	0.580	0.175	0.580	0.206	0.750	0.512
0.960	0.055	0.640	0.369	0.650	-0.081	0.830	0.589
		0.750	0.268	0.750	-0.001	0.900	0.649
		0.870	0.238	0.890	0.598	0.960	0.470
		0.930	0.210	0.930	0.540		
		0.960	0.116	0.960	0.664		
CN =	0.573		0.694		0.772		0.837

Table E-2. Continued.

Flight 216, Wing sweep = 26°, Time = 11-5-14-000, MINF = 0.805, Camber = 10/9, ALPT = 8.32, BETA = 0.22, QINF = 306.8, RNPU = 2.5E+06, CNWP = 0.7148

η = 0.93		0.76		0.59		0.40	
			Upper Surface				
x/c	CP	*x/c*	CP	*x/c*	CP	*x/c*	CP
0.020	0.188	0.000	0.698	0.000	0.353**	0.010	-0.217
0.060	-0.267	0.020	-0.083	0.020	0.050	0.020	-0.259
0.110	-0.558	0.040	-0.009	0.060	0.021**	0.060	-0.886
0.200	-1.229	0.060	-0.493	0.090	-0.742	0.110	-1.186
0.230	-1.154	0.090	-0.641	0.110	-0.948	0.140	-1.510
0.400	-0.942	0.130	-0.875	0.130	-2.207**	0.190	-2.207**
0.490	-0.737	0.150	-1.151	0.150	-1.299	0.250	-1.489
0.590	-0.379	0.200	-1.235	0.210	-1.292	0.400	-0.979
0.630	-0.408	0.250	-1.319	0.250	-1.289	0.490	-0.740
0.700	-0.415	0.260	-1.225	0.340	-1.318	0.580	-0.703
0.750	-1.016	0.280	-1.289	0.370	-1.302	0.650	-0.696
0.810	-0.990	0.290	-1.281	0.400	-1.251	0.700	-0.717
0.840	-1.005	0.310	-1.225	0.410	-2.243**	0.750	-0.769
0.900	-0.558	0.320	-1.232	0.430	-1.310	0.800	-0.561
0.960	-0.554	0.340	-1.244	0.440	-1.271	0.830	-0.486
		0.350	-0.538**	0.460	-1.289	0.900	-0.425
		0.370	-1.201	0.490	-1.212	0.960	-0.438
		0.380	-1.300	0.500	-1.300		
		0.400	-0.341	0.520	-1.261		
		0.410	-1.257	0.540	-1.286		
		0.430	-1.206	0.550	-1.233		
		0.440	-1.145	0.580	-1.214		
		0.460	-1.285	0.600	-1.239		
		0.470	-1.202	0.610	-1.106		
		0.490	-1.199	0.650	-0.869		
		0.500	-1.228	0.700	-0.623		
		0.520	-1.198	0.750	-0.617		
		0.530	-1.188	0.820	-0.339		
		0.550	-1.210	0.890	-0.319		
		0.560	-1.207	0.900	-0.318		
		0.580	-1.173	0.960	-0.283		
		0.590	-1.218				
		0.600	-1.204				
		0.640	-0.483				
		0.700	-0.447				
		0.750	-0.024**				
		0.820	-0.250				
		0.870	-0.263				
		0.930	-0.316				
		0.960	-0.333				
			Lower Surface				
0.020	-0.231	0.020	0.006	0.020	0.038	0.020	0.221
0.110	0.025	0.060	0.227	0.060	0.287	0.060	0.055
0.230	0.068	0.090	0.163	0.090	0.238	0.110	0.174
0.400	0.058	0.120	0.215	0.120	-0.035	0.250	0.093
0.490	0.063	0.200	0.062	0.200	0.011	0.400	0.089
0.630	1.604**	0.260	0.143	0.250	0.186	0.490	0.095
0.750	0.098	0.400	0.162	0.400	0.163	0.580	0.172
0.850	0.148	0.490	0.149	0.490	0.020	0.650	0.362
0.900	0.214	0.580	0.198	0.580	0.268	0.750	0.538
0.960	0.018	0.640	0.382	0.650	-0.029	0.830	0.631
		0.750	0.278	0.750	-0.009	0.900	0.675
		0.870	0.271	0.890	0.606	0.960	0.481
		0.930	0.225	0.930	0.548		
		0.960	0.118	0.960	0.621		
CN =	0.794		0.962		1.051		1.119

Table E-2. Continued.

Flight 216, Wing sweep = 26°, Time = 11-6-47-000, MINF = 0.795, Camber = 10/6, ALPT = 3.02, BETA = -0.65, QINF = 296.8, RNPU = 2.4E+06, CNWP = 0.3546

η = 0.93		0.76		0.59		0.40	
			Upper Surface				
x/c	CP	*x/c*	CP	*x/c*	CP	*x/c*	CP
0.020	0.531	0.000	0.044	0.000	0.075**	0.010	0.399
0.060	0.081	0.020	0.370	0.020	0.542	0.020	0.280
0.110	-0.292	0.040	0.389	0.060	0.397**	0.060	-0.240
0.200	-0.303	0.060	-0.067	0.090	-0.303	0.110	-0.683
0.230	-0.316	0.090	-0.290	0.110	-0.584	0.140	-1.134
0.400	-0.249	0.130	-0.571	0.130	-2.263**	0.190	-2.263**
0.490	-0.245	0.150	-0.903	0.150	-1.019	0.250	-0.381
0.590	-0.321	0.200	-0.935	0.210	-0.965	0.400	-0.365
0.630	-0.362	0.250	-0.419	0.250	-0.351	0.490	-0.369
0.700	-0.379	0.260	-0.341	0.340	-0.385	0.580	-0.379
0.750	-0.801	0.280	-0.389	0.370	-0.397	0.650	-0.458
0.810	-0.732	0.290	-0.389	0.400	-0.388	0.700	-0.480
0.840	-0.700	0.310	-0.375	0.410	-2.001**	0.750	-0.573
0.900	-0.241	0.320	-0.366	0.430	-0.402	0.800	-0.636
0.960	-0.110	0.340	-0.372	0.440	-0.356	0.830	-0.508
		0.350	-0.244**	0.460	-0.387	0.900	-0.499
		0.370	-0.341	0.490	-0.335	0.960	-0.535
		0.380	-0.389	0.500	-0.406		
		0.400	-0.283	0.520	-0.375		
		0.410	-0.387	0.540	-0.397		
		0.430	-0.342	0.550	-0.377		
		0.440	-0.311	0.580	-0.395		
		0.460	-0.397	0.600	-0.401		
		0.470	-0.357	0.610	-0.409		
		0.490	-0.366	0.650	-0.887		
		0.500	-0.375	0.700	-0.645		
		0.520	-0.370	0.750	-0.698		
		0.530	-0.365	0.820	-0.422		
		0.550	-0.403	0.890	-0.388		
		0.560	-0.389	0.900	-0.411		
		0.580	-0.371	0.960	-0.345		
		0.590	-0.418				
		0.600	-0.432				
		0.640	-0.634				
		0.700	-0.522				
		0.750	-0.125**				
		0.820	-0.282				
		0.870	-0.325				
		0.930	-0.395				
		0.960	-0.423				
			Lower Surface				
0.020	-0.965	0.020	-0.898	0.020	-0.749	0.020	-1.080
0.110	-0.327	0.060	-0.384	0.060	-0.473	0.060	0.003
0.230	-0.063	0.090	-0.303	0.090	-0.262	0.110	-0.306
0.400	0.034	0.120	-0.115	0.120	-0.389	0.250	-0.142
0.490	0.046	0.200	-0.059	0.200	-0.116	0.400	-0.083
0.630	1.675**	0.260	-0.062	0.250	-0.001	0.490	-0.042
0.750	0.067	0.400	0.049	0.400	0.021	0.580	0.075
0.850	0.112	0.490	0.051	0.490	-0.088	0.650	0.302
0.900	0.193	0.580	0.127	0.580	0.187	0.750	0.466
0.960	0.127	0.640	0.254	0.650	-0.129	0.830	0.527
		0.750	0.162	0.750	-0.007	0.900	0.607
		0.870	0.140	0.890	0.467	0.960	0.461
		0.930	0.150	0.930	0.412		
		0.960	0.072	0.960	0.527		
CN =	0.313		0.434		0.488		0.578

Table E-2. Continued.

Flight 216, Wing sweep = 26°, Time = 11-6-59-500, MINF = 0.804, Camber = 10/6, ALPT = 5.94, BETA = -0.10, QINF = 304.5, RNPU = 2.5E+06, CNWP = 0.5619

η = 0.93		0.76		0.59		0.40	
			Upper Surface				
x/c	CP	*x/c*	CP	*x/c*	CP	*x/c*	CP
0.020	0.355	0.000	0.423	0.000	0.187**	0.010	0.039
0.060	-0.105	0.020	0.128	0.020	0.286	0.020	-0.066
0.110	-0.468	0.040	0.126	0.060	0.412**	0.060	-0.697
0.200	-1.141	0.060	-0.299	0.090	-0.511	0.110	-0.989
0.230	-1.080	0.090	-0.485	0.110	-0.764	0.140	-1.358
0.400	-0.225	0.130	-0.752	0.130	-2.210**	0.190	-2.210**
0.490	-0.232	0.150	-1.038	0.150	-1.190	0.250	-1.095
0.590	-0.329	0.200	-1.129	0.210	-1.186	0.400	-0.586
0.630	-0.385	0.250	-1.197	0.250	-1.159	0.490	-0.498
0.700	-0.407	0.260	-1.105	0.340	-1.151	0.580	-0.482
0.750	-0.855	0.280	-1.166	0.370	-1.141	0.650	-0.546
0.810	-0.802	0.290	-1.141	0.400	-1.116	0.700	-0.534
0.840	-0.811	0.310	-1.082	0.410	-1.955**	0.750	-0.634
0.900	-0.338	0.320	-1.093	0.430	-0.707	0.800	-0.644
0.960	-0.208	0.340	-1.083	0.440	-0.550	0.830	-0.543
		0.350	-0.521**	0.460	-0.498	0.900	-0.512
		0.370	-1.050	0.490	-0.301	0.960	-0.528
		0.380	-1.143	0.500	-0.394		
		0.400	-0.309	0.520	-0.355		
		0.410	-1.091	0.540	-0.349		
		0.430	-0.721	0.550	-0.357		
		0.440	-0.541	0.580	-0.340		
		0.460	-0.482	0.600	-0.354		
		0.470	-0.325	0.610	-0.375		
		0.490	-0.323	0.650	-0.914		
		0.500	-0.301	0.700	-0.590		
		0.520	-0.290	0.750	-0.655		
		0.530	-0.261	0.820	-0.583		
		0.550	-0.293	0.890	-0.423		
		0.560	-0.265	0.900	-0.481		
		0.580	-0.279	0.960	-0.409		
		0.590	-0.327				
		0.600	-0.348				
		0.640	-0.481				
		0.700	-0.510				
		0.750	-0.098**				
		0.820	-0.346				
		0.870	-0.357				
		0.930	-0.433				
		0.960	-0.416				
			Lower Surface				
0.020	-0.921	0.020	-0.396	0.020	-0.291	0.020	-0.144
0.110	-0.064	0.060	0.006	0.060	0.129	0.060	0.010
0.230	-0.007	0.090	0.036	0.090	0.101	0.110	0.011
0.400	0.036	0.120	0.103	0.120	-0.144	0.250	-0.008
0.490	0.040	0.200	0.007	0.200	-0.083	0.400	0.012
0.630	1.628**	0.260	0.078	0.250	0.092	0.490	0.028
0.750	0.057	0.400	0.099	0.400	0.094	0.580	0.132
0.850	0.100	0.490	0.097	0.490	-0.046	0.650	0.334
0.900	0.182	0.580	0.153	0.580	0.225	0.750	0.526
0.960	0.077	0.640	0.343	0.650	-0.102	0.830	0.596
		0.750	0.217	0.750	0.004	0.900	0.644
		0.870	0.219	0.890	0.594	0.960	0.471
		0.930	0.181	0.930	0.525		
		0.960	0.092	0.960	0.642		
CN =	0.511		0.702		0.798		0.874

Table E-2. Continued.

Flight 216, Wing sweep = 26°, Time = 11-7-3-000, MINF = 0.807, Camber = 10/7, ALPT = 8.29, BETA = -0.47, QINF = 309.3, RNPU = 2.5E+06, CNWP = 0.7265

η = 0.93		0.76		0.59		0.40	
			Upper Surface				
x/c	CP	*x/c*	CP	*x/c*	CP	*x/c*	CP
0.020	0.190	0.000	0.699	0.000	0.258**	0.010	-0.245
0.060	-0.255	0.020	-0.072	0.020	0.044	0.020	-0.267
0.110	-0.557	0.040	-0.020	0.060	0.242**	0.060	-0.869
0.200	-1.211	0.060	-0.494	0.090	-0.736	0.110	-1.195
0.230	-1.157	0.090	-0.629	0.110	-0.953	0.140	-1.470
0.400	-0.946	0.130	-0.864	0.130	-2.193**	0.190	-2.193**
0.490	-0.703	0.150	-1.135	0.150	-1.278	0.250	-1.467
0.590	-0.339	0.200	-1.220	0.210	-1.280	0.400	-0.954
0.630	-0.376	0.250	-1.298	0.250	-1.261	0.490	-0.733
0.700	-0.379	0.260	-1.211	0.340	-1.297	0.580	-0.687
0.750	-0.824	0.280	-1.277	0.370	-1.296	0.650	-0.694
0.810	-0.798	0.290	-1.277	0.400	-1.252	0.700	-0.696
0.840	-0.822	0.310	-1.217	0.410	-1.942**	0.750	-0.724
0.900	-0.492	0.320	-1.220	0.430	-1.303	0.800	-0.547
0.960	-0.358	0.340	-1.230	0.440	-1.265	0.830	-0.445
		0.350	-0.524**	0.460	-1.277	0.900	-0.376
		0.370	-1.188	0.490	-1.250	0.960	-0.424
		0.380	-1.288	0.500	-1.298		
		0.400	-0.306	0.520	-1.256		
		0.410	-1.243	0.540	-1.280		
		0.430	-1.197	0.550	-1.239		
		0.440	-1.137	0.580	-1.228		
		0.460	-1.264	0.600	-1.207		
		0.470	-1.228	0.610	-1.086		
		0.490	-1.186	0.650	-0.953		
		0.500	-1.207	0.700	-0.572		
		0.520	-1.178	0.750	-0.601		
		0.530	-1.171	0.820	-0.318		
		0.550	-1.213	0.890	-0.298		
		0.560	-1.193	0.900	-0.300		
		0.580	-1.159	0.960	-0.270		
		0.590	-1.202				
		0.600	-1.164				
		0.640	-0.466				
		0.700	-0.426				
		0.750	-0.053**				
		0.820	-0.238				
		0.870	-0.244				
		0.930	-0.328				
		0.960	-0.337				
			Lower Surface				
0.020	-0.284	0.020	0.030	0.020	0.026	0.020	0.232
0.110	0.021	0.060	0.221	0.060	0.269	0.060	0.054
0.230	0.064	0.090	0.178	0.090	0.251	0.110	0.159
0.400	0.057	0.120	0.231	0.120	-0.024	0.250	0.106
0.490	0.048	0.200	0.075	0.200	0.024	0.400	0.095
0.630	1.587**	0.260	0.145	0.250	0.195	0.490	0.105
0.750	0.059	0.400	0.146	0.400	0.157	0.580	0.185
0.850	0.094	0.490	0.136	0.490	0.002	0.650	0.377
0.900	0.183	0.580	0.199	0.580	0.262	0.750	0.553
0.960	0.052	0.640	0.379	0.650	-0.053	0.830	0.607
		0.750	0.232	0.750	0.030	0.900	0.680
		0.870	0.215	0.890	0.625	0.960	0.493
		0.930	0.223	0.930	0.554		
		0.960	0.134	0.960	0.680		
CN =	0.727		0.939		1.048		1.104

Table E-2. Continued.

Flight 216, Wing sweep = 26°, Time = 11-8-20-000, MINF = 0.802, Camber = 10/4, ALPT = 3.09, BETA = -0.62, QINF = 302.2, RNPU = 2.5E+06, CNWP = 0.3607

η = 0.93		0.76		0.59		0.40	
			Upper Surface				
x/c	CP	*x/c*	CP	*x/c*	CP	*x/c*	CP
0.020	0.548	0.000	0.043	0.000	-0.057**	0.010	0.411
0.060	0.076	0.020	0.350	0.020	0.558	0.020	0.262
0.110	-0.288	0.040	0.388	0.060	0.578**	0.060	-0.269
0.200	-0.311	0.060	-0.078	0.090	-0.300	0.110	-0.650
0.230	-0.323	0.090	-0.280	0.110	-0.569	0.140	-1.127
0.400	-0.257	0.130	-0.567	0.130	-2.220**	0.190	-2.220**
0.490	-0.217	0.150	-0.872	0.150	-1.014	0.250	-0.380
0.590	-0.324	0.200	-0.919	0.210	-0.960	0.400	-0.385
0.630	-0.335	0.250	-0.399	0.250	-0.343	0.490	-0.371
0.700	-0.329	0.260	-0.334	0.340	-0.391	0.580	-0.395
0.750	-0.448	0.280	-0.386	0.370	-0.403	0.650	-0.472
0.810	-0.419	0.290	-0.394	0.400	-0.379	0.700	-0.459
0.840	-0.402	0.310	-0.374	0.410	-1.963**	0.750	-0.575
0.900	-0.235	0.320	-0.368	0.430	-0.400	0.800	-0.658
0.960	-0.113	0.340	-0.357	0.440	-0.372	0.830	-0.511
		0.350	-0.253**	0.460	-0.387	0.900	-0.512
		0.370	-0.340	0.490	-0.319	0.960	-0.539
		0.380	-0.390	0.500	-0.402		
		0.400	-0.291	0.520	-0.364		
		0.410	-0.389	0.540	-0.388		
		0.430	-0.348	0.550	-0.383		
		0.440	-0.299	0.580	-0.383		
		0.460	-0.391	0.600	-0.392		
		0.470	-0.363	0.610	-0.401		
		0.490	-0.364	0.650	-0.981		
		0.500	-0.375	0.700	-0.654		
		0.520	-0.376	0.750	-0.698		
		0.530	-0.371	0.820	-0.444		
		0.550	-0.417	0.890	-0.425		
		0.560	-0.370	0.900	-0.424		
		0.580	-0.377	0.960	-0.376		
		0.590	-0.419				
		0.600	-0.432				
		0.640	-0.636				
		0.700	-0.587				
		0.750	-0.154**				
		0.820	-0.315				
		0.870	-0.332				
		0.930	-0.397				
		0.960	-0.351				
			Lower Surface				
0.020	-1.045	0.020	-0.898	0.020	-0.764	0.020	-1.073
0.110	-0.363	0.060	-0.423	0.060	-0.501	0.060	-0.013
0.230	-0.078	0.090	-0.333	0.090	-0.307	0.110	-0.273
0.400	0.002	0.120	-0.198	0.120	-0.421	0.250	-0.158
0.490	0.014	0.200	-0.070	0.200	-0.147	0.400	-0.094
0.630	1.647**	0.260	-0.073	0.250	-0.017	0.490	-0.046
0.750	0.015	0.400	0.024	0.400	0.013	0.580	0.071
0.850	0.059	0.490	0.056	0.490	-0.106	0.650	0.299
0.900	0.126	0.580	0.116	0.580	0.178	0.750	0.459
0.960	0.079	0.640	0.233	0.650	-0.161	0.830	0.521
		0.750	0.122	0.750	-0.019	0.900	0.596
		0.870	0.115	0.890	0.475	0.960	0.463
		0.930	0.142	0.930	0.414		
		0.960	0.069	0.960	0.580		
CN =	0.224		0.416		0.484		0.579

Table E-2. Continued.

Flight 216, Wing sweep = 26°, Time = 11-8-28-000, MINF = 0.810, Camber = 10/4, ALPT = 6.06, BETA = -0.44, QINF = 308.6, RNPU = 2.5E+06, CNWP = 0.5489

η = 0.93		0.76		0.59		0.40	
			Upper Surface				
x/c	CP	*x/c*	CP	*x/c*	CP	*x/c*	CP
0.020	0.371	0.000	0.423	0.000	0.176**	0.010	0.044
0.060	-0.099	0.020	0.150	0.020	0.303	0.020	0.001
0.110	-0.434	0.040	0.176	0.060	0.465**	0.060	-0.662
0.200	-1.135	0.060	-0.305	0.090	-0.489	0.110	-0.951
0.230	-1.096	0.090	-0.457	0.110	-0.758	0.140	-1.301
0.400	-0.217	0.130	-0.717	0.130	-2.175**	0.190	-2.175**
0.490	-0.203	0.150	-1.007	0.150	-1.194	0.250	-1.117
0.590	-0.315	0.200	-1.104	0.210	-1.156	0.400	-0.607
0.630	-0.352	0.250	-1.152	0.250	-1.135	0.490	-0.505
0.700	-0.353	0.260	-1.079	0.340	-1.130	0.580	-0.476
0.750	-0.543	0.280	-1.137	0.370	-1.113	0.650	-0.534
0.810	-0.487	0.290	-1.121	0.400	-1.089	0.700	-0.532
0.840	-0.471	0.310	-1.059	0.410	-1.924**	0.750	-0.649
0.900	-0.324	0.320	-1.073	0.430	-1.093	0.800	-0.630
0.960	-0.187	0.340	-1.056	0.440	-0.728	0.830	-0.517
		0.350	-0.514**	0.460	-0.578	0.900	-0.500
		0.370	-1.031	0.490	-0.409	0.960	-0.516
		0.380	-1.119	0.500	-0.429		
		0.400	-0.279	0.520	-0.362		
		0.410	-1.071	0.540	-0.352		
		0.430	-1.021	0.550	-0.348		
		0.440	-0.907	0.580	-0.348		
		0.460	-0.655	0.600	-0.333		
		0.470	-0.435	0.610	-0.352		
		0.490	-0.375	0.650	-0.893		
		0.500	-0.329	0.700	-0.555		
		0.520	-0.303	0.750	-0.624		
		0.530	-0.249	0.820	-0.509		
		0.550	-0.284	0.890	-0.404		
		0.560	-0.256	0.900	-0.434		
		0.580	-0.251	0.960	-0.361		
		0.590	-0.284				
		0.600	-0.309				
		0.640	-0.435				
		0.700	-0.494				
		0.750	-0.112**				
		0.820	-0.431				
		0.870	-0.361				
		0.930	-0.311				
		0.960	-0.313				
			Lower Surface				
0.020	-0.946	0.020	-0.410	0.020	-0.282	0.020	-0.137
0.110	-0.064	0.060	0.033	0.060	0.145	0.060	0.015
0.230	-0.001	0.090	0.030	0.090	0.107	0.110	0.016
0.400	0.029	0.120	0.103	0.120	-0.143	0.250	-0.003
0.490	0.030	0.200	0.001	0.200	-0.057	0.400	0.017
0.630	1.612**	0.260	0.072	0.250	0.103	0.490	0.033
0.750	0.009	0.400	0.107	0.400	0.098	0.580	0.136
0.850	0.044	0.490	0.108	0.490	-0.048	0.650	0.342
0.900	0.132	0.580	0.156	0.580	0.227	0.750	0.519
0.960	0.061	0.640	0.340	0.650	-0.109	0.830	0.596
		0.750	0.195	0.750	-0.005	0.900	0.658
		0.870	0.176	0.890	0.605	0.960	0.476
		0.930	0.191	0.930	0.545		
		0.960	0.106	0.960	0.677		
CN =	0.435		0.697		0.794		0.872

Table E-2. Continued.

Flight 216, Wing sweep = 26°, Time = 11-8-31-000, MINF = 0.809, Camber = 10/4, ALPT = 8.00, BETA = -0.41, QINF = 307.0, RNPU = 2.5E+06, CNWP = 0.7208

η = 0.93		0.76		0.59		0.40	
			Upper Surface				
x/c	CP	*x/c*	CP	*x/c*	CP	*x/c*	CP
0.020	0.227	0.000	0.669	0.000	0.237**	0.010	-0.188
0.060	-0.232	0.020	-0.053	0.020	0.074	0.020	-0.245
0.110	-0.527	0.040	0.028	0.060	0.220**	0.060	-0.837
0.200	-1.183	0.060	-0.470	0.090	-0.703	0.110	-1.153
0.230	-1.156	0.090	-0.594	0.110	-0.887	0.140	-1.449
0.400	-0.911	0.130	-0.835	0.130	-2.183**	0.190	-2.183**
0.490	-0.622	0.150	-1.106	0.150	-1.249	0.250	-1.438
0.590	-0.314	0.200	-1.198	0.210	-1.261	0.400	-0.917
0.630	-0.351	0.250	-1.261	0.250	-1.245	0.490	-0.695
0.700	-0.347	0.260	-1.190	0.340	-1.265	0.580	-0.665
0.750	-0.497	0.280	-1.247	0.370	-1.255	0.650	-0.682
0.810	-0.457	0.290	-1.242	0.400	-1.235	0.700	-0.684
0.840	-0.448	0.310	-1.188	0.410	-1.930**	0.750	-0.746
0.900	-0.432	0.320	-1.193	0.430	-1.272	0.800	-0.567
0.960	-0.224	0.340	-1.202	0.440	-1.237	0.830	-0.466
		0.350	-0.529**	0.460	-1.265	0.900	-0.417
		0.370	-1.160	0.490	-1.174	0.960	-0.438
		0.380	-1.275	0.500	-1.264		
		0.400	-0.283	0.520	-1.235		
		0.410	-1.211	0.540	-1.252		
		0.430	-1.174	0.550	-1.215		
		0.440	-1.104	0.580	-1.189		
		0.460	-1.241	0.600	-1.101		
		0.470	-1.182	0.610	-0.939		
		0.490	-1.163	0.650	-1.024		
		0.500	-1.187	0.700	-0.640		
		0.520	-1.159	0.750	-0.619		
		0.530	-1.138	0.820	-0.314		
		0.550	-1.175	0.890	-0.306		
		0.560	-1.170	0.900	-0.289		
		0.580	-1.131	0.960	-0.255		
		0.590	-1.171				
		0.600	-1.161				
		0.640	-0.493				
		0.700	-0.453				
		0.750	-0.070**				
		0.820	-0.367				
		0.870	-0.255				
		0.930	-0.258				
		0.960	-0.264				
			Lower Surface				
0.020	-0.280	0.020	-0.027	0.020	-0.007	0.020	0.200
0.110	0.027	0.060	0.224	0.060	0.254	0.060	0.051
0.230	0.061	0.090	0.165	0.090	0.222	0.110	0.148
0.400	0.030	0.120	0.208	0.120	-0.027	0.250	0.083
0.490	0.031	0.200	0.052	0.200	0.015	0.400	0.093
0.630	1.625**	0.260	0.144	0.250	0.186	0.490	0.103
0.750	0.008	0.400	0.158	0.400	0.161	0.580	0.189
0.850	0.026	0.490	0.145	0.490	-0.015	0.650	0.377
0.900	0.118	0.580	0.190	0.580	0.261	0.750	0.540
0.960	0.035	0.640	0.364	0.650	-0.077	0.830	0.624
		0.750	0.213	0.750	0.027	0.900	0.682
		0.870	0.228	0.890	0.627	0.960	0.497
		0.930	0.218	0.930	0.559		
		0.960	0.122	0.960	0.675		
CN =	0.622		0.929		1.028		1.085

Table E-2. Continued.

Flight 216, Wing sweep = 26°, Time = 11-10-2-500, MINF = 0.806, Camber = 10/0, ALPT = 3.02, BETA = -0.24, QINF = 306.1, RNPU = 2.5E+06, CNWP = 0.3578

η = 0.93		0.76		0.59		0.40	
			Upper Surface				
x/c	CP	*x/c*	CP	*x/c*	CP	*x/c*	CP
0.020	0.526	0.000	0.044	0.000	-0.029**	0.010	0.409
0.060	0.077	0.020	0.357	0.020	0.567	0.020	0.272
0.110	-0.292	0.040	0.390	0.060	0.541**	0.060	-0.273
0.200	-0.351	0.060	-0.069	0.090	-0.283	0.110	-0.629
0.230	-0.308	0.090	-0.284	0.110	-0.560	0.140	-1.120
0.400	-0.246	0.130	-0.560	0.130	-2.199**	0.190	-2.199**
0.490	-0.196	0.150	-0.868	0.150	-1.000	0.250	-0.389
0.590	-0.278	0.200	-0.931	0.210	-0.964	0.400	-0.373
0.630	-0.255	0.250	-0.388	0.250	-0.339	0.490	-0.368
0.700	-0.184	0.260	-0.310	0.340	-0.378	0.580	-0.387
0.750	-0.210	0.280	-0.375	0.370	-0.397	0.650	-0.463
0.810	-0.203	0.290	-0.371	0.400	-0.424	0.700	-0.455
0.840	-0.181	0.310	-0.364	0.410	-1.946**	0.750	-0.575
0.900	-0.172	0.320	-0.361	0.430	-0.402	0.800	-0.657
0.960	-0.084	0.340	-0.353	0.440	-0.365	0.830	-0.530
		0.350	-0.257**	0.460	-0.384	0.900	-0.521
		0.370	-0.339	0.490	-0.322	0.960	-0.531
		0.380	-0.388	0.500	-0.399		
		0.400	-0.294	0.520	-0.367		
		0.410	-0.382	0.540	-0.377		
		0.430	-0.351	0.550	-0.373		
		0.440	-0.291	0.580	-0.386		
		0.460	-0.393	0.600	-0.382		
		0.470	-0.359	0.610	-0.403		
		0.490	-0.359	0.650	-0.972		
		0.500	-0.372	0.700	-0.642		
		0.520	-0.364	0.750	-0.693		
		0.530	-0.363	0.820	-0.478		
		0.550	-0.410	0.890	-0.454		
		0.560	-0.378	0.900	-0.462		
		0.580	-0.367	0.960	-0.423		
		0.590	-0.412				
		0.600	-0.424				
		0.640	-0.628				
		0.700	-0.573				
		0.750	-0.177**				
		0.820	-0.392				
		0.870	-0.367				
		0.930	-0.355				
		0.960	-0.383				
			Lower Surface				
0.020	-1.072	0.020	-0.884	0.020	-0.777	0.020	-1.060
0.110	-0.340	0.060	-0.414	0.060	-0.508	0.060	-0.020
0.230	-0.066	0.090	-0.313	0.090	-0.305	0.110	-0.277
0.400	-0.013	0.120	-0.166	0.120	-0.431	0.250	-0.157
0.490	-0.012	0.200	-0.073	0.200	-0.139	0.400	-0.096
0.630	1.619**	0.260	-0.086	0.250	-0.017	0.490	-0.049
0.750	-0.052	0.400	0.017	0.400	0.006	0.580	0.073
0.850	-0.017	0.490	0.040	0.490	-0.119	0.650	0.302
0.900	0.051	0.580	0.100	0.580	0.173	0.750	0.460
0.960	0.035	0.640	0.227	0.650	-0.180	0.830	0.516
		0.750	0.073	0.750	-0.026	0.900	0.596
		0.870	0.089	0.890	0.469	0.960	0.462
		0.930	0.104	0.930	0.417		
		0.960	0.029	0.960	0.562		
CN =	0.143		0.406		0.481		0.575

Table E-2. Continued.

Flight 216, Wing sweep = 26°, Time = 11-10-12-000, MINF = 0.806, Camber = 10/0, ALPT = 5.83, BETA = -0.38, QINF = 306.9, RNPU = 2.5E+06, CNWP = 0.5499

η = 0.93		0.76		0.59		0.40	
			Upper Surface				
x/c	CP	*x/c*	CP	*x/c*	CP	*x/c*	CP
0.020	0.393	0.000	0.398	0.000	0.159**	0.010	0.074
0.060	-0.093	0.020	0.158	0.020	0.324	0.020	-0.031
0.110	-0.437	0.040	0.187	0.060	0.456**	0.060	-0.647
0.200	-1.141	0.060	-0.288	0.090	-0.483	0.110	-0.940
0.230	-1.060	0.090	-0.454	0.110	-0.738	0.140	-1.302
0.400	-0.193	0.130	-0.720	0.130	-2.199**	0.190	-2.199**
0.490	-0.233	0.150	-1.017	0.150	-1.163	0.250	-0.982
0.590	-0.287	0.200	-1.105	0.210	-1.156	0.400	-0.540
0.630	-0.268	0.250	-1.170	0.250	-1.136	0.490	-0.464
0.700	-0.200	0.260	-1.064	0.340	-1.119	0.580	-0.454
0.750	-0.239	0.280	-1.121	0.370	-1.093	0.650	-0.513
0.810	-0.221	0.290	-1.113	0.400	-1.078	0.700	-0.506
0.840	-0.208	0.310	-1.058	0.410	-1.946**	0.750	-0.628
0.900	-0.215	0.320	-1.069	0.430	-0.612	0.800	-0.645
0.960	-0.130	0.340	-1.061	0.440	-0.491	0.830	-0.531
		0.350	-0.518**	0.460	-0.441	0.900	-0.505
		0.370	-1.026	0.490	-0.312	0.960	-0.530
		0.380	-1.119	0.500	-0.361		
		0.400	-0.292	0.520	-0.326		
		0.410	-0.915	0.540	-0.326		
		0.430	-0.519	0.550	-0.325		
		0.440	-0.390	0.580	-0.344		
		0.460	-0.415	0.600	-0.346		
		0.470	-0.303	0.610	-0.353		
		0.490	-0.269	0.650	-0.921		
		0.500	-0.268	0.700	-0.584		
		0.520	-0.248	0.750	-0.646		
		0.530	-0.241	0.820	-0.531		
		0.550	-0.297	0.890	-0.434		
		0.560	-0.263	0.900	-0.469		
		0.580	-0.277	0.960	-0.388		
		0.590	-0.323				
		0.600	-0.342				
		0.640	-0.468				
		0.700	-0.498				
		0.750	-0.160**				
		0.820	-0.434				
		0.870	-0.357				
		0.930	-0.345				
		0.960	-0.351				
			Lower Surface				
0.020	-1.004	0.020	-0.441	0.020	-0.295	0.020	-0.187
0.110	-0.076	0.060	0.011	0.060	0.109	0.060	0.004
0.230	-0.013	0.090	0.007	0.090	0.094	0.110	0.004
0.400	0.007	0.120	0.085	0.120	-0.155	0.250	-0.011
0.490	-0.014	0.200	-0.014	0.200	-0.082	0.400	0.009
0.630	1.610**	0.260	0.061	0.250	0.099	0.490	0.029
0.750	-0.077	0.400	0.096	0.400	0.087	0.580	0.135
0.850	-0.045	0.490	0.082	0.490	-0.081	0.650	0.340
0.900	0.026	0.580	0.131	0.580	0.210	0.750	0.520
0.960	0.026	0.640	0.305	0.650	-0.149	0.830	0.588
		0.750	0.128	0.750	-0.017	0.900	0.650
		0.870	0.148	0.890	0.590	0.960	0.473
		0.930	0.142	0.930	0.526		
		0.960	0.056	0.960	0.666		
CN =	0.318		0.648		0.762		0.832

Table E-2. Continued.

Flight 216, Wing sweep = 26°, Time = 11-10-16-000, MINF = 0.803, Camber = 10/0, ALPT = 8.04, BETA = -0.30, QINF = 306.7, RNPU = 2.5E+06, CNWP = 0.7191

η = 0.93		0.76		0.59		0.40	
			Upper Surface				
x/c	CP	*x/c*	CP	*x/c*	CP	*x/c*	CP
0.020	0.157	0.000	0.707	0.000	0.222**	0.010	-0.230
0.060	-0.279	0.020	-0.110	0.020	0.033	0.020	-0.288
0.110	-0.588	0.040	-0.052	0.060	0.249**	0.060	-0.915
0.200	-1.225	0.060	-0.531	0.090	-0.756	0.110	-1.208
0.230	-1.194	0.090	-0.636	0.110	-0.973	0.140	-1.500
0.400	-0.987	0.130	-0.875	0.130	-2.215**	0.190	-2.215**
0.490	-0.449	0.150	-1.148	0.150	-1.307	0.250	-1.483
0.590	-0.292	0.200	-1.243	0.210	-1.305	0.400	-0.967
0.630	-0.292	0.250	-1.327	0.250	-1.297	0.490	-0.729
0.700	-0.209	0.260	-1.233	0.340	-1.326	0.580	-0.681
0.750	-0.267	0.280	-1.306	0.370	-1.310	0.650	-0.718
0.810	-0.270	0.290	-1.283	0.400	-1.281	0.700	-0.710
0.840	-0.253	0.310	-1.249	0.410	-1.962**	0.750	-0.756
0.900	-0.296	0.320	-1.257	0.430	-1.318	0.800	-0.528
0.960	-0.191	0.340	-1.265	0.440	-1.280	0.830	-0.450
		0.350	-0.532**	0.460	-1.291	0.900	-0.380
		0.370	-1.206	0.490	-1.220	0.960	-0.415
		0.380	-1.321	0.500	-1.327		
		0.400	-0.306	0.520	-1.285		
		0.410	-1.278	0.540	-1.294		
		0.430	-1.225	0.550	-1.253		
		0.440	-1.148	0.580	-1.257		
		0.460	-1.293	0.600	-1.197		
		0.470	-1.229	0.610	-1.008		
		0.490	-1.218	0.650	-0.926		
		0.500	-1.246	0.700	-0.574		
		0.520	-1.236	0.750	-0.614		
		0.530	-1.188	0.820	-0.334		
		0.550	-1.236	0.890	-0.323		
		0.560	-1.207	0.900	-0.310		
		0.580	-1.194	0.960	-0.270		
		0.590	-1.208				
		0.600	-0.909				
		0.640	-0.467				
		0.700	-0.455				
		0.750	-0.152**				
		0.820	-0.534				
		0.870	-0.439				
		0.930	-0.310				
		0.960	-0.333				
			Lower Surface				
0.020	-0.253	0.020	0.051	0.020	0.053	0.020	0.249
0.110	0.039	0.060	0.253	0.060	0.292	0.060	0.032
0.230	0.057	0.090	0.190	0.090	0.263	0.110	0.172
0.400	0.018	0.120	0.214	0.120	-0.003	0.250	0.116
0.490	-0.003	0.200	0.058	0.200	0.021	0.400	0.099
0.630	1.596**	0.260	0.142	0.250	0.207	0.490	0.102
0.750	-0.083	0.400	0.147	0.400	0.155	0.580	0.198
0.850	-0.058	0.490	0.130	0.490	-0.052	0.650	0.383
0.900	0.002	0.580	0.160	0.580	0.268	0.750	0.563
0.960	-0.011	0.640	0.345	0.650	-0.127	0.830	0.617
		0.750	0.148	0.750	0.041	0.900	0.679
		0.870	0.137	0.890	0.620	0.960	0.485
		0.930	0.146	0.930	0.541		
		0.960	0.071	0.960	0.683		
CN =	0.534		0.957		1.054		1.119

Table E-2. Continued.

Flight 192, Wing sweep = 26°, Time = 11-25-33-000, MINF = 0.797, Camber = 5/15, ALPT = 7.00, BETA = -0.06, QINF = 233.9, RNPU = 1.9E+06, CNWP = 0.5904

η = 0.93		0.76		0.59		0.40	
			Upper Surface				
x/c	CP	*x/c*	CP	*x/c*	CP	*x/c*	CP
0.020	-0.200	0.000	0.896	0.000	-4.479**	0.010	-1.028
0.060	-0.409	0.020	-0.804**	0.020	-0.432	0.020	-0.868
0.110	-0.538	0.040	-0.363	0.060	-0.343	0.060	-0.929
0.200	-0.962	0.060	-0.694	0.090	-0.814	0.110	-1.147
0.230	-0.848	0.090	-0.717	0.110	-1.015	0.140	-1.280
0.400	-0.224	0.130	-0.826	0.130	-1.002	0.190	-5.825**
0.490	-0.251	0.150	-1.018	0.150	-1.141	0.250	-1.232
0.590	-0.359	0.200	-0.966	0.210	-1.170	0.400	-0.455
0.630	-0.395	0.250	-1.165	0.250	-1.107	0.490	-0.467
0.700	-0.406	0.260	-1.006	0.340	-1.122	0.580	-0.519
0.750	-0.694	0.280	-1.129	0.370	-1.090	0.650	-0.485
0.810	-0.740	0.290	-1.104	0.400	-0.821	0.700	-0.512
0.840	-0.665	0.310	-1.036	0.410	-0.539	0.750	-0.641
0.900	-0.531	0.320	-0.991	0.430	-0.505	0.800	-0.686
0.960	-0.626	0.340	-1.040	0.440	-0.417	0.830	-0.515
		0.350	-0.459**	0.460	-0.091**	0.900	-0.476
		0.370	-1.000	0.490	-0.272	0.960	-0.478
		0.380	-1.018	0.500	-0.388		
		0.400	-0.532	0.520	-0.266		
		0.410	-0.487	0.540	-0.302		
		0.430	-0.380	0.550	-0.319		
		0.440	-0.240	0.580	-0.390		
		0.460	-0.385	0.600	-0.381		
		0.470	-0.253	0.610	-0.282		
		0.490	-0.256	0.650	-2.331**		
		0.500	-0.266	0.700	-0.630		
		0.520	-0.280	0.750	-0.677		
		0.530	-0.259	0.820	-0.646		
		0.550	-0.317	0.890	-0.417		
		0.560	-0.269	0.900	-0.497		
		0.580	-0.299	0.960	-0.457		
		0.590	-0.362				
		0.600	-0.454				
		0.640	-2.124**				
		0.700	-0.524				
		0.750	-0.659				
		0.820	-2.338**				
		0.870	-0.397				
		0.930	-0.369				
		0.960	-0.356				
			Lower Surface				
0.020	-0.188	0.020	0.274	0.020	0.094	0.020	0.358
0.110	0.000	0.060	0.209	0.060	0.305	0.060	2.547**
0.230	0.130	0.090	0.122	0.090	0.181	0.110	0.052
0.400	0.107	0.120	0.159	0.120	-0.343	0.250	0.057
0.490	0.102	0.200	0.127	0.200	-0.013	0.400	0.065
0.630	2.503**	0.260	0.054	0.250	0.140	0.490	0.026
0.750	0.270	0.400	-2.369**	0.400	0.103	0.580	0.092
0.850	0.337	0.490	0.139	0.490	0.096	0.650	0.306
0.900	0.386	0.580	0.259	0.580	0.214	0.750	0.515
0.960	0.129	0.640	0.642**	0.650	0.432	0.830	0.575
		0.750	0.413	0.750	0.540	0.900	0.680
		0.870	0.497	0.890	********	0.960	0.461
		0.930	0.448	0.930	0.509		
		0.960	0.278	0.960	-2.199**		
CN =	0.649		0.820		0.884		0.922

Table E-2. Continued.

Flight 192, Wing sweep = 26°, Time = 11-25-40-000, MINF = 0.786, Camber = 5/15, ALPT = 8.08, BETA = 0.42, QINF = 224.2, RNPU = 1.9E+06, CNWP = 0.6774

η = 0.93		0.76		0.59		0.40	
			Upper Surface				
x/c	CP	*x/c*	CP	*x/c*	CP	*x/c*	CP
0.020	-0.450	0.000	0.892	0.000	-4.641**	0.010	-1.068
0.060	-0.592	0.020	-1.126**	0.020	-0.650	0.020	-1.099
0.110	-0.741	0.040	-0.513	0.060	-0.447	0.060	-1.191
0.200	-1.026	0.060	-0.836	0.090	-0.971	0.110	-1.322
0.230	-0.902	0.090	-0.937	0.110	-1.195	0.140	-1.389
0.400	-0.281	0.130	-1.030	0.130	-1.162	0.190	-6.045**
0.490	-0.268	0.150	-1.174	0.150	-1.258	0.250	-1.407
0.590	-0.383	0.200	-1.120	0.210	-1.315	0.400	-0.628
0.630	-0.405	0.250	-1.289	0.250	-1.239	0.490	-0.525
0.700	-0.436	0.260	-1.109	0.340	-1.261	0.580	-0.516
0.750	-0.829	0.280	-1.235	0.370	-1.229	0.650	-0.463
0.810	-0.821	0.290	-1.247	0.400	-1.272	0.700	-0.521
0.840	-0.761	0.310	-1.150	0.410	-1.187	0.750	-0.646
0.900	-0.621	0.320	-1.109	0.430	-1.153	0.800	-0.683
0.960	-0.696	0.340	-1.165	0.440	-0.752	0.830	-0.642
		0.350	-0.446**	0.460	-0.356**	0.900	-0.329
		0.370	-1.108	0.490	-0.469	0.960	-0.368
		0.380	-1.143	0.500	-0.552		
		0.400	-1.031	0.520	-0.407		
		0.410	-1.175	0.540	-0.414		
		0.430	-1.030	0.550	-0.387		
		0.440	-0.627	0.580	-0.351		
		0.460	-0.659	0.600	-0.349		
		0.470	-0.475	0.610	-0.225		
		0.490	-0.397	0.650	-2.399**		
		0.500	-0.310	0.700	-0.515		
		0.520	-0.352	0.750	-0.640		
		0.530	-0.252	0.820	-0.664		
		0.550	-0.274	0.890	-0.312		
		0.560	-0.201	0.900	-0.370		
		0.580	-0.246	0.960	-0.366		
		0.590	-0.260				
		0.600	-0.389				
		0.640	-2.183**				
		0.700	-0.514				
		0.750	-0.785				
		0.820	-2.406**				
		0.870	-0.353				
		0.930	-0.323				
		0.960	-0.310				
			Lower Surface				
0.020	0.013	0.020	0.328	0.020	0.258	0.020	0.515
0.110	0.063	0.060	0.325	0.060	0.429	0.060	2.689**
0.230	0.179	0.090	0.211	0.090	0.275	0.110	0.141
0.400	0.144	0.120	0.219	0.120	-0.276	0.250	0.125
0.490	0.119	0.200	0.199	0.200	0.018	0.400	0.130
0.630	2.644**	0.260	0.098	0.250	0.199	0.490	0.070
0.750	0.279	0.400	-2.439**	0.400	0.160	0.580	0.116
0.850	0.329	0.490	0.163	0.490	0.142	0.650	0.312
0.900	0.391	0.580	0.292	0.580	0.246	0.750	0.518
0.960	0.129	0.640	0.691**	0.650	0.464	0.830	0.589
		0.750	0.446	0.750	0.566	0.900	0.686
		0.870	0.507	0.890	********	0.960	0.478
		0.930	0.436	0.930	0.513		
		0.960	0.288	0.960	-2.261**		
CN =	0.741		0.952		1.001		1.034

Table E-2. Continued.

Flight 192, Wing sweep = 26°, Time = 11-25-43-500, MINF = 0.784, Camber = 5/15, ALPT = 9.25, BETA = -0.08, QINF = 225.1, RNPU = 1.9E+06, CNWP = 0.7521

η = 0.93		0.76		0.59		0.40	
			Upper Surface				
x/c	CP	*x/c*	CP	*x/c*	CP	*x/c*	CP
0.020	-0.920	0.000	0.788	0.000	-4.640**	0.010	-1.268
0.060	-0.741	0.020	-1.443**	0.020	-1.048	0.020	-1.272
0.110	-0.733	0.040	-0.834	0.060	-0.434	0.060	-1.335
0.200	-1.088	0.060	-0.998	0.090	-1.115	0.110	-1.402
0.230	-1.077	0.090	-1.029	0.110	-1.302	0.140	-1.500
0.400	-0.895	0.130	-1.168	0.130	-1.282	0.190	-6.037**
0.490	-0.311	0.150	-1.298	0.150	-1.388	0.250	-1.534
0.590	-0.381	0.200	-1.244	0.210	-1.427	0.400	-0.910
0.630	-0.449	0.250	-1.403	0.250	-1.350	0.490	-0.742
0.700	-0.449	0.260	-1.220	0.340	-1.400	0.580	-0.557
0.750	-1.176	0.280	-1.353	0.370	-1.341	0.650	-0.484
0.810	-1.114	0.290	-1.354	0.400	-1.364	0.700	-0.527
0.840	-1.007	0.310	-1.264	0.410	-1.298	0.750	-0.575
0.900	-0.709	0.320	-1.229	0.430	-1.374	0.800	-0.537
0.960	-0.794	0.340	-1.298	0.440	-1.309	0.830	-0.446
		0.350	-0.445**	0.460	-1.027**	0.900	-0.271
		0.370	-1.233	0.490	-1.194	0.960	-0.325
		0.380	-1.273	0.500	-1.003		
		0.400	-1.166	0.520	-0.800		
		0.410	-1.305	0.540	-0.801		
		0.430	-1.258	0.550	-0.728		
		0.440	-1.142	0.580	-0.715		
		0.460	-1.405	0.600	-0.637		
		0.470	-1.241	0.610	-0.521		
		0.490	-1.229	0.650	-2.408**		
		0.500	-1.159	0.700	-0.474		
		0.520	-0.941	0.750	-0.647		
		0.530	-0.649	0.820	-0.393		
		0.550	-0.623	0.890	-0.248		
		0.560	-0.521	0.900	-0.253		
		0.580	-0.489	0.960	-0.252		
		0.590	-0.471				
		0.600	-0.491				
		0.640	-2.193**				
		0.700	-0.449				
		0.750	-1.010				
		0.820	-2.415**				
		0.870	-0.303				
		0.930	-0.283				
		0.960	-0.264				
			Lower Surface				
0.020	0.084	0.020	0.331	0.020	0.433	0.020	0.625
0.110	0.113	0.060	0.407	0.060	0.473	0.060	2.658**
0.230	0.233	0.090	0.285	0.090	0.353	0.110	0.187
0.400	0.163	0.120	0.287	0.120	-0.209	0.250	0.180
0.490	0.148	0.200	0.251	0.200	0.082	0.400	0.159
0.630	2.613**	0.260	0.147	0.250	0.247	0.490	0.109
0.750	0.272	0.400	-2.448**	0.400	0.206	0.580	0.149
0.850	0.321	0.490	0.196	0.490	0.161	0.650	0.350
0.900	0.380	0.580	0.301	0.580	0.274	0.750	0.535
0.960	0.104	0.640	0.696**	0.650	0.491	0.830	0.606
		0.750	0.469	0.750	0.593	0.900	0.703
		0.870	0.549	0.890	********	0.960	0.468
		0.930	0.459	0.930	0.521		
		0.960	0.292	0.960	-2.271**		
CN =	0.939		1.145		1.134		1.138

Table E-2. Continued.

Flight 192, Wing sweep = 26°, Time = 11-25-56-500, MINF = 0.795, Camber = 5/14, ALPT = 11.50, BETA = 0.86, QINF = 260.8, RNPU = 2.2E+06, CNWP = 0.5738

η = 0.93		0.76		0.59		0.40	
			Upper Surface				
x/c	CP	*x/c*	CP	*x/c*	CP	*x/c*	CP
0.020	-1.105	0.000	0.690	0.000	-4.258**	0.010	-1.401
0.060	-1.081	0.020	-1.619**	0.020	-1.206	0.020	-1.392
0.110	-1.085	0.040	-1.076	0.060	-0.603	0.060	-1.507
0.200	-1.206	0.060	-1.165	0.090	-1.279	0.110	-1.557
0.230	-1.154	0.090	-1.240	0.110	-1.459	0.140	-1.569
0.400	-1.096	0.130	-1.323	0.130	-1.407	0.190	-5.465**
0.490	-0.416	0.150	-1.419	0.150	-1.347	0.250	-1.225
0.590	-0.357	0.200	-1.379	0.210	-1.231	0.400	-0.957
0.630	-0.394	0.250	-1.552	0.250	-0.873	0.490	-0.912
0.700	-0.443	0.260	-1.382	0.340	-0.883	0.580	-0.848
0.750	-1.242	0.280	-1.471	0.370	-0.843	0.650	-0.562
0.810	-1.329	0.290	-1.487	0.400	-0.876	0.700	-0.641
0.840	-1.288	0.310	-1.355	0.410	-0.773	0.750	-0.606
0.900	-0.826	0.320	-1.342	0.430	-0.817	0.800	-0.652
0.960	-0.860	0.340	-1.377	0.440	-0.803	0.830	-0.604
		0.350	-0.422**	0.460	-0.521**	0.900	-0.433
		0.370	-1.218	0.490	-0.727	0.960	-0.407
		0.380	-1.216	0.500	-0.777		
		0.400	-1.085	0.520	-0.697		
		0.410	-1.186	0.540	-0.706		
		0.430	-0.992	0.550	-0.740		
		0.440	-0.806	0.580	-0.752		
		0.460	-0.958	0.600	-0.685		
		0.470	-0.754	0.610	-0.561		
		0.490	-0.726	0.650	-2.331**		
		0.500	-0.642	0.700	-0.642		
		0.520	-0.665	0.750	-0.707		
		0.530	-0.471	0.820	-0.558		
		0.550	-0.555	0.890	-0.490		
		0.560	-0.380	0.900	-0.442		
		0.580	-0.396	0.960	-0.444		
		0.590	-0.320				
		0.600	-0.368				
		0.640	-2.146**				
		0.700	-0.337				
		0.750	-0.476				
		0.820	-2.337**				
		0.870	-0.273				
		0.930	-0.295				
		0.960	-0.283				
			Lower Surface				
0.020	0.205	0.020	0.348	0.020	0.587	0.020	0.801
0.110	0.193	0.060	0.543	0.060	0.610	0.060	2.043**
0.230	0.308	0.090	0.392	0.090	0.471	0.110	0.324
0.400	0.191	0.120	0.376	0.120	-0.037	0.250	0.265
0.490	0.144	0.200	0.329	0.200	0.167	0.400	0.239
0.630	2.004**	0.260	0.202	0.250	0.328	0.490	0.158
0.750	0.294	0.400	-2.365**	0.400	0.247	0.580	0.202
0.850	0.328	0.490	0.216	0.490	0.164	0.650	0.370
0.900	0.393	0.580	0.314	0.580	0.254	0.750	0.602
0.960	0.138	0.640	0.667**	0.650	0.474	0.830	0.663
		0.750	0.451	0.750	0.584	0.900	0.744
		0.870	0.539	0.890	********	0.960	0.486
		0.930	0.455	0.930	0.513		
		0.960	0.290	0.960	-2.213**		
CN =	1.094		1.108		1.095		1.265

Table E-2. Continued.

Flight 204, Wing sweep = 26°, Time = 9-15-28-000, MINF = 0.790, Camber = 5/15, ALPT = 3.97, BETA = -0.18, QINF = 266.4, RNPU = 2.2E+06, CNWP = 0.4161

η = 0.93		0.76		0.59		0.40	
			Upper Surface				
x/c	CP	*x/c*	CP	*x/c*	CP	*x/c*	CP
0.020	0.260	0.000	0.657	0.000	1.408**	0.010	-0.226
0.060	-0.060	0.020	0.139	0.020	0.136	0.020	-0.125**
0.110	-0.250	0.040	0.130	0.060	0.109**	0.060	-0.486**
0.200	-0.310	0.060	-0.252	0.090	-0.345	0.110	-0.709
0.230	-0.309	0.090	-0.357	0.110	-0.588	0.140	-1.000
0.400	-0.395	0.130	-0.695	0.130	-0.761	0.190	-2.287**
0.490	-0.218	0.150	-0.654	0.150	-0.848	0.250	-0.409
0.590	-0.298	0.200	-0.531	0.210	-0.719	0.400	-0.376
0.630	-0.320	0.250	-0.403	0.250	-0.378	0.490	-0.365
0.700	-0.447	0.260	-0.348	0.340	-0.366	0.580	-0.375
0.750	-0.479	0.280	-0.380	0.370	-0.388	0.650	-0.425
0.810	-0.446	0.290	-0.380	0.400	-0.336	0.700	-0.541
0.840	-0.475	0.310	-0.362	0.410	-0.366	0.750	-0.567
0.900	-0.352	0.320	-0.354	0.430	-0.343	0.800	-0.686
0.960	-0.346	0.340	-0.351	0.440	-0.380	0.830	-0.502
		0.350	-0.131**	0.460	-0.129	0.900	-0.446
		0.370	-0.329	0.490	-0.301	0.960	-0.470**
		0.380	-0.365	0.500	-0.352		
		0.400	-0.265	0.520	-0.354		
		0.410	-0.342	0.540	-0.380		
		0.430	-0.429	0.550	-0.343		
		0.440	-0.273	0.580	-0.338		
		0.460	-0.325	0.600	-0.394		
		0.470	-0.327	0.610	-0.408		
		0.490	-0.343	0.650	0.054**		
		0.500	-0.301	0.700	-0.606		
		0.520	-0.316	0.750	-0.611		
		0.530	-0.356	0.820	-0.271		
		0.550	-0.329	0.890	-0.427		
		0.560	-0.372	0.900	-0.514		
		0.580	-0.328	0.960	-0.404		
		0.590	-0.393				
		0.600	-0.401				
		0.640	-0.647				
		0.700	-0.535				
		0.750	0.110**				
		0.820	-0.501				
		0.870	-0.340				
		0.930	-0.343				
		0.960	-0.374				
			Lower Surface				
0.020	-0.713	0.020	-0.476	0.020	-0.334	0.020	-0.099
0.110	-0.096	0.060	-0.064	0.060	0.036	0.060	0.050
0.230	0.040	0.090	-0.169	0.090	-0.014	0.110	-0.062
0.400	0.117	0.120	-0.007**	0.120	-0.325	0.250	-0.102
0.490	0.131	0.200	0.043	0.200	0.091	0.400	-0.074
0.630	5.117**	0.260	0.003	0.250	0.025	0.490	-0.017
0.750	0.307	0.400	0.088	0.400	0.037	0.580	0.019
0.850	0.339	0.490	0.111	0.490	0.121	0.650	0.307
0.900	0.431	0.580	0.176	0.580	0.166	0.750	0.442
0.960	0.201	0.640	0.393	0.650	0.095	0.830	0.548
		0.750	0.467	0.750	-0.306**	0.900	0.608
		0.870	0.524	0.890	0.559	0.960	0.457
		0.930	0.468	0.930	0.493		
		0.960	0.313	0.960	0.349		
CN =	0.462		0.586		0.557		0.602

Table E-2. Continued.

Flight 204, Wing sweep = 26°, Time = 9-15-38-500, MINF = 0.794, Camber = 5/15, ALPT = 4.99, BETA = -0.56, QINF = 267.9, RNPU = 2.2E+06, CNWP = 0.6139

η = 0.93		0.76		0.59		0.40	
			Upper Surface				
x/c	CP	*x/c*	CP	*x/c*	CP	*x/c*	CP
0.020	0.080	0.000	0.683	0.000	1.312**	0.010	-0.799
0.060	-0.214	0.020	-0.087	0.020	-0.155	0.020	-0.425**
0.110	-0.436	0.040	-0.115	0.060	-0.023**	0.060	-0.839**
0.200	-0.387	0.060	-0.640	0.090	-0.604	0.110	-0.903
0.230	-0.421	0.090	-0.785	0.110	-0.778	0.140	-1.126
0.400	-0.359	0.130	-0.712	0.130	-1.154	0.190	-2.265**
0.490	-0.347	0.150	-0.829	0.150	-1.016	0.250	-0.943
0.590	-0.390	0.200	-0.922	0.210	-1.065	0.400	-0.509
0.630	-0.481	0.250	-0.643	0.250	-0.943	0.490	-0.460
0.700	-0.697	0.260	-0.426	0.340	-0.714	0.580	-0.452
0.750	-0.623	0.280	-0.450	0.370	-0.458	0.650	-0.611
0.810	-0.794	0.290	-0.411	0.400	-0.422	0.700	-0.584
0.840	-0.561	0.310	-0.399	0.410	-0.449	0.750	-0.898
0.900	-0.530	0.320	-0.640	0.430	-0.724	0.800	-0.730
0.960	-0.529	0.340	-0.586	0.440	-0.438	0.830	-0.561
		0.350	-0.387**	0.460	-0.481	0.900	-0.547
		0.370	-0.599	0.490	-0.397	0.960	-0.558**
		0.380	-0.445	0.500	-0.458		
		0.400	-0.360	0.520	-0.703		
		0.410	-0.689	0.540	-0.448		
		0.430	-0.414	0.550	-0.572		
		0.440	-0.360	0.580	-0.418		
		0.460	-0.471	0.600	-0.445		
		0.470	-0.475	0.610	-0.493		
		0.490	-0.681	0.650	-0.035**		
		0.500	-0.467	0.700	-0.695		
		0.520	-0.477	0.750	-0.769		
		0.530	-0.466	0.820	-0.361		
		0.550	-0.435	0.890	-0.546		
		0.560	-0.643	0.900	-0.848		
		0.580	-0.502	0.960	-0.518		
		0.590	-0.679				
		0.600	-0.482				
		0.640	-0.943				
		0.700	-0.653				
		0.750	0.066**				
		0.820	-0.574				
		0.870	-0.402				
		0.930	-0.430				
		0.960	-0.420				
			Lower Surface				
0.020	-0.396	0.020	-0.366	0.020	-0.313	0.020	-0.034
0.110	-0.318	0.060	-0.043	0.060	0.008	0.060	0.003
0.230	0.001	0.090	-0.113	0.090	-0.253	0.110	-0.054
0.400	-0.013	0.120	-0.022**	0.120	-0.288	0.250	-0.130
0.490	0.058	0.200	-0.013	0.200	-0.188	0.400	-0.375
0.630	5.098**	0.260	-0.225	0.250	-0.076	0.490	-0.113
0.750	0.042	0.400	-0.029	0.400	-0.062	0.580	0.023
0.850	0.085	0.490	-0.010	0.490	-0.221	0.650	0.217
0.900	0.151	0.580	0.148	0.580	0.105	0.750	0.411
0.960	0.113	0.640	0.299	0.650	0.043	0.830	0.302
		0.750	0.401	0.750	-0.295**	0.900	0.317
		0.870	0.230	0.890	0.549	0.960	0.383
		0.930	0.389	0.930	0.169		
		0.960	0.047	0.960	0.289		
CN =	0.434		0.648		0.662		0.668

Table E-2. Continued.

Flight 204, Wing sweep = 26°, Time = 9-15-47-500, MINF = 0.796, Camber = 5/15, ALPT = 6.01, BETA = -0.33, QINF = 270.1, RNPU = 2.2E+06, CNWP = 0.4391

η = 0.93		0.76		0.59		0.40	
			Upper Surface				
x/c	CP	*x/c*	CP	*x/c*	CP	*x/c*	CP
0.020	-0.212	0.000	0.678	0.000	1.156**	0.010	-1.057
0.060	-0.485	0.020	-0.382	0.020	-0.677	0.020	-0.525**
0.110	-0.654	0.040	-0.345	0.060	-0.306**	0.060	-1.098**
0.200	-1.086	0.060	-0.685	0.090	-0.793	0.110	-1.241
0.230	-0.885	0.090	-0.750	0.110	-0.949	0.140	-1.372
0.400	-0.333	0.130	-0.884	0.130	-1.027	0.190	-2.255**
0.490	-0.324	0.150	-1.250	0.150	-1.168	0.250	-1.235
0.590	-0.523	0.200	-1.313	0.210	-1.157	0.400	-0.609
0.630	-0.516	0.250	-1.188	0.250	-1.210	0.490	-0.529
0.700	-0.652	0.260	-1.186	0.340	-1.123	0.580	-0.601
0.750	-0.788	0.280	-1.161	0.370	-0.682	0.650	-0.691
0.810	-0.733	0.290	-1.190	0.400	-0.509	0.700	-0.672
0.840	-0.770	0.310	-1.152	0.410	-0.547	0.750	-0.745
0.900	-0.627	0.320	-1.098	0.430	-0.434	0.800	-0.758
0.960	-0.669	0.340	-1.098	0.440	-0.372	0.830	-0.683
		0.350	-0.407**	0.460	-0.264	0.900	-0.644
		0.370	-0.555	0.490	-0.516	0.960	-0.878**
		0.380	-0.522	0.500	-0.481		
		0.400	-0.630	0.520	-0.736		
		0.410	-0.440	0.540	-0.471		
		0.430	-0.427	0.550	-0.757		
		0.440	-0.398	0.580	-0.738		
		0.460	-0.397	0.600	-0.794		
		0.470	-0.442	0.610	-0.449		
		0.490	-0.460	0.650	-0.044**		
		0.500	-0.467	0.700	-0.824		
		0.520	-0.439	0.750	-0.820		
		0.530	-0.488	0.820	-0.444		
		0.550	-0.518	0.890	-0.586		
		0.560	-0.535	0.900	-0.687		
		0.580	-0.508	0.960	-0.592		
		0.590	-0.594				
		0.600	-0.590				
		0.640	-0.798				
		0.700	-0.754				
		0.750	0.008**				
		0.820	-0.700				
		0.870	-0.509				
		0.930	-0.496				
		0.960	-0.539				
			Lower Surface				
0.020	-0.456	0.020	-0.228	0.020	-0.112	0.020	0.100
0.110	-0.206	0.060	-0.045	0.060	0.018	0.060	0.050
0.230	-0.080	0.090	-0.092	0.090	0.039	0.110	-0.115
0.400	-0.070	0.120	-0.071**	0.120	-0.485	0.250	-0.038
0.490	-0.040	0.200	-0.075	0.200	0.026	0.400	-0.072
0.630	5.048**	0.260	-0.326	0.250	-0.040	0.490	-0.079
0.750	0.113	0.400	-0.065	0.400	-0.038	0.580	-0.310
0.850	0.193	0.490	0.010	0.490	0.039	0.650	0.126
0.900	0.271	0.580	0.159	0.580	0.063	0.750	0.452
0.960	-0.045	0.640	0.012	0.650	-0.007	0.830	0.391
		0.750	0.301	0.750	-0.301**	0.900	0.514
		0.870	0.138	0.890	0.479	0.960	0.274
		0.930	0.276	0.930	0.370		
		0.960	0.119	0.960	0.207		
CN =	0.577		0.740		0.784		0.836

Table E-2. Continued.

Flight 204, Wing sweep = 26°, Time = 9-15-50-500, MINF = 0.797, Camber = 5/15, ALPT = 7.18, BETA = -0.15, QINF = 272.2, RNPU = 2.2E+06, CNWP = 0.7512

η = 0.93		0.76		0.59		0.40	
			Upper Surface				
x/c	CP	*x/c*	CP	*x/c*	CP	*x/c*	CP
0.020	-0.299	0.000	0.739	0.000	1.186**	0.010	-1.047
0.060	-0.646	0.020	-0.681	0.020	-0.588	0.020	-1.065**
0.110	-0.634	0.040	-0.442	0.060	-0.367**	0.060	-1.106**
0.200	-1.078	0.060	-0.799	0.090	-0.961	0.110	-1.244
0.230	-0.996	0.090	-0.788	0.110	-1.013	0.140	-1.511
0.400	-0.366	0.130	-0.985	0.130	-1.175	0.190	-2.249**
0.490	-0.301	0.150	-1.069	0.150	-1.268	0.250	-1.455
0.590	-0.470	0.200	-1.111	0.210	-1.287	0.400	-0.721
0.630	-0.524	0.250	-1.176	0.250	-1.267	0.490	-0.507
0.700	-0.514	0.260	-1.220	0.340	-1.310	0.580	-0.573
0.750	-0.913	0.280	-1.272	0.370	-1.280	0.650	-0.661
0.810	-0.804	0.290	-1.253	0.400	-1.257	0.700	-0.643
0.840	-0.841	0.310	-1.193	0.410	-1.263	0.750	-0.778
0.900	-0.761	0.320	-1.206	0.430	-1.236	0.800	-0.793
0.960	-0.751	0.340	-1.096	0.440	-0.892	0.830	-0.655
		0.350	-0.491**	0.460	-0.489	0.900	-0.473
		0.370	-1.199	0.490	-0.592	0.960	-0.567**
		0.380	-1.256	0.500	-0.576		
		0.400	-1.168	0.520	-0.526		
		0.410	-1.211	0.540	-0.493		
		0.430	-1.135	0.550	-0.360		
		0.440	-0.802	0.580	-0.454		
		0.460	-0.638	0.600	-0.563		
		0.470	-0.536	0.610	-0.509		
		0.490	-0.465	0.650	0.079**		
		0.500	-0.428	0.700	-0.656		
		0.520	-0.397	0.750	-0.668		
		0.530	-0.365	0.820	-0.458		
		0.550	-0.361	0.890	-0.519		
		0.560	-0.366	0.900	-0.578		
		0.580	-0.306	0.960	-0.500		
		0.590	-0.439				
		0.600	-0.440				
		0.640	-0.466				
		0.700	-0.571				
		0.750	0.017**				
		0.820	-0.542				
		0.870	-0.496				
		0.930	-0.480				
		0.960	-0.462				
			Lower Surface				
0.020	-0.207	0.020	0.024	0.020	0.095	0.020	0.285
0.110	-0.115	0.060	0.092	0.060	0.223	0.060	-0.074
0.230	0.024	0.090	0.035	0.090	0.175	0.110	-0.016
0.400	-0.016	0.120	0.055**	0.120	-0.146	0.250	-0.102
0.490	0.013	0.200	0.011	0.200	0.109	0.400	-0.075
0.630	4.999**	0.260	-0.013	0.250	0.006	0.490	-0.065
0.750	0.152	0.400	0.009	0.400	-0.011	0.580	-0.029
0.850	0.175	0.490	0.027	0.490	-0.004	0.650	0.178
0.900	0.239	0.580	0.091	0.580	0.059	0.750	0.395
0.960	0.009	0.640	0.303	0.650	0.066	0.830	0.563
		0.750	0.329	0.750	-0.310**	0.900	0.522
		0.870	0.528	0.890	0.488	0.960	0.444
		0.930	0.427	0.930	0.376		
		0.960	0.179	0.960	0.206		
CN =	0.669		0.875		0.903		0.898

Table E-2. Concluded.

Flight 204, Wing sweep = 26°, Time = 9-15-53-000, MINF = 0.795, Camber = 5/15, ALPT = 7.93, BETA = -0.24, QINF = 271.9, RNPU = 2.2E+06, CNWP = 0.6265

η = 0.93		0.76		0.59		0.40	
			Upper Surface				
x/c	CP	*x/c*	CP	*x/c*	CP	*x/c*	CP
0.020	-0.591	0.000	0.753	0.000	1.161**	0.010	-1.387
0.060	-0.734	0.020	-0.859	0.020	-0.713	0.020	-1.208**
0.110	-0.832	0.040	-0.835	0.060	-0.371**	0.060	-1.263**
0.200	-1.424	0.060	-0.945	0.090	-1.104	0.110	-1.402
0.230	-1.068	0.090	-1.029	0.110	-1.249	0.140	-1.807
0.400	-0.576	0.130	-1.103	0.130	-1.546	0.190	-2.262**
0.490	-0.646	0.150	-1.198	0.150	-1.372	0.250	-1.553
0.590	-0.490	0.200	-1.232	0.210	-1.391	0.400	-0.921
0.630	-0.545	0.250	-1.610	0.250	-1.631	0.490	-0.670
0.700	-0.642	0.260	-1.305	0.340	-1.655	0.580	-0.636
0.750	-1.101	0.280	-1.354	0.370	-1.397	0.650	-0.701
0.810	-0.918	0.290	-1.603	0.400	-1.366	0.700	-0.704
0.840	-0.959	0.310	-1.300	0.410	-1.312	0.750	-0.793
0.900	-0.839	0.320	-1.564	0.430	-1.380	0.800	-0.679
0.960	-0.840	0.340	-1.254	0.440	-1.377	0.830	-0.635
		0.350	-0.515**	0.460	-1.113	0.900	-0.719
		0.370	-1.239	0.490	-1.211	0.960	-0.480**
		0.380	-1.363	0.500	-1.191		
		0.400	-1.187	0.520	-0.818		
		0.410	-1.251	0.540	-0.709		
		0.430	-1.283	0.550	-0.662		
		0.440	-1.493	0.580	-0.641		
		0.460	-1.334	0.600	-0.610		
		0.470	-1.295	0.610	-0.577		
		0.490	-1.195	0.650	-0.012**		
		0.500	-0.825	0.700	-0.590		
		0.520	-0.957	0.750	-0.675		
		0.530	-0.583	0.820	-0.386		
		0.550	-0.477	0.890	-0.448		
		0.560	-0.507	0.900	-0.448		
		0.580	-0.446	0.960	-0.425		
		0.590	-0.453				
		0.600	-0.435				
		0.640	-0.755				
		0.700	-0.557				
		0.750	0.006**				
		0.820	-0.545				
		0.870	-0.443				
		0.930	-0.458				
		0.960	-0.456				
			Lower Surface				
0.020	-0.114	0.020	0.149	0.020	0.131	0.020	0.375
0.110	-0.338	0.060	-0.103	0.060	0.208	0.060	0.028
0.230	0.038	0.090	-0.185	0.090	0.210	0.110	0.068
0.400	0.006	0.120	0.077**	0.120	-0.352	0.250	-0.309
0.490	0.011	0.200	-0.213	0.200	0.137	0.400	-0.013
0.630	4.993**	0.260	-0.036	0.250	0.084	0.490	-0.019
0.750	0.137	0.400	-0.239	0.400	0.011	0.580	0.004
0.850	-0.018	0.490	0.037	0.490	-0.257	0.650	0.188
0.900	0.232	0.580	0.237	0.580	0.121	0.750	0.390
0.960	-0.271	0.640	0.260	0.650	-0.170	0.830	0.468
		0.750	0.073	0.750	-0.321**	0.900	0.528
		0.870	0.432	0.890	0.491	0.960	0.324
		0.930	0.309	0.930	0.382		
		0.960	0.221	0.960	0.221		
CN =	0.750		0.913		0.983		1.003

APPENDIX F

Wing Pressure Coefficients for Nominal Dynamic Pressure of 300 lb/ft^2 and Mach Number of 0.85.

Leading-edge wing sweep is 26°. Table F-1 contains a summary of the data listing in table F-2. The asterisks (*) in table F-2 indicate invalid values. Camber is $\delta_{LE/TE}$. Refer to Nomenclature for definitions.

Table F-1. Summary of data.

Flight	Time	MINF	Camber	ALPT	BETA	QINF	RNPU	CNWP
221	14-5-23-500	0.854	0/2	5.93	-0.47	300.0	2.4E+06	0.2288
221	14-5-24-000	0.854	0/2	5.80	0.05	300.0	2.4E+06	0.2409
221	14-4-17-500	0.854	0/2	5.99	-0.18	300.3	2.4E+06	0.2490
221	14-6-39-000	0.845	0/2	8.49	-0.44	290.2	2.3E+06	0.3880
221	14-10-6-500	0.845	0/2	10.13	-0.65	285.6	2.3E+06	0.3091
198	13-47-53-500	0.850	0/2	6.10	0.15	294.6	2.3E+06	0.3599
198	13-48-30-500	0.850	0/2	6.97	-0.01	295.0	2.3E+06	0.4476
198	13-48-42-000	0.855	0/2	8.05	0.15	299.2	2.3E+06	0.5304
198	13-48-48-500	0.857	0/2	8.60	0.47	301.2	2.4E+06	0.5761
198	13-48-54-000	0.857	0/2	9.06	0.26	301.0	2.4E+06	0.5635
198	13-48-56-500	0.855	0/2	9.93	0.23	299.4	2.3E+06	0.4326
198	13-49-9-500	0.853	0/2	10.94	0.65	298.5	2.3E+06	0.3605
198	13-44-5-000	0.864	0/2	7.04	0.47	306.9	2.4E+06	0.4640
198	13-44-36-000	0.844	0/2	8.20	0.31	297.1	2.4E+06	0.5278
198	13-44-48-000	0.839	0/2	8.62	0.26	294.4	2.3E+06	0.5279
198	13-44-56-000	0.846	0/2	9.00	0.10	299.8	2.4E+06	0.5776
198	13-45-6-000	0.847	0/2	10.00	0.07	301.5	2.4E+06	0.4444
221	13-17-25-000	0.852	0/2	5.08	-0.07	297.1	2.3E+06	0.2299
221	13-17-38-500	0.846	0/2	6.04	-0.18	291.6	2.3E+06	0.2906
221	13-17-42-500	0.853	0/2	7.07	-0.27	294.5	2.3E+06	0.3584
221	13-17-49-500	0.858	0/2	7.94	-0.18	296.8	2.3E+06	0.4297
221	13-17-51-500	0.861	0/2	8.68	-0.15	298.8	2.3E+06	0.4668
221	13-17-58-500	0.861	0/2	11.05	-0.33	306.5	2.4E+06	0.2951
221	13-18-1-500	0.854	0/2	12.24	0.60	307.6	2.4E+06	0.2915
221	14-6-7-500	0.855	0/2	5.48	-0.70	300.7	2.4E+06	0.2256
221	14-6-22-500	0.854	0/2	5.99	-0.36	300.3	2.4E+06	0.2446
221	14-6-28-000	0.849	0/2	7.11	-0.27	296.4	2.3E+06	0.3184
191	9-43-28-000	0.847	5/2	6.05	-0.03	289.2	2.3E+06	0.3660
191	9-43-34-500	0.850	5/2	7.07	0.10	292.9	2.3E+06	0.4629
191	9-43-39-000	0.852	5/2	7.95	-0.03	297.4	2.3E+06	0.5531

Table F-1. Continued.

Flight	Time	MINF	Camber	ALPT	BETA	QINF	RNPU	CNWP
191	9-43-41-000	0.853	5/2	9.02	-0.01	300.3	2.4E+06	0.5452
195	10-44-14-000	0.851	5/2	6.08	0.18	288.6	2.3E+06	0.3727
195	10-44-36-000	0.855	5/2	7.04	0.18	290.3	2.3E+06	0.4688
195	10-45-4-500	0.851	5/2	7.91	-0.08	271.7	2.1E+06	0.5256
195	10-45-22-500	0.861	5/2	8.03	-0.14	286.9	2.2E+06	0.5330
195	10-45-27-500	0.861	5/2	9.21	-0.19	288.6	2.3E+06	0.5588
195	10-45-41-500	0.845	5/2	11.03	-0.06	281.2	2.2E+06	0.3657
195	10-45-49-500	0.847	5/2	12.01	0.02	294.4	2.3E+06	0.3023
200	8-25-10-500	0.857	5/2	12.20	0.25	309.8	2.4E+06	0.3799
216	10-44-12-000	0.850	5/2	3.99	-0.12	291.7	2.3E+06	0.2739
216	10-43-40-000	0.845	5/2	5.05	0.02	297.2	2.4E+06	0.3051
216	10-47-48-000	0.852	5/6	4.07	-0.04	304.1	2.4E+06	0.2578
195	10-47-55-500	0.840	5/6	5.04	0.10	287.3	2.3E+06	0.3877
195	10-48-15-500	0.845	5/6	7.10	-0.24	287.1	2.3E+06	0.5438
195	10-48-31-500	0.847	5/6	8.17	0.52	278.1	2.2E+06	0.6261
195	10-49-27-500	0.855	5/6	8.02	0.05	290.0	2.3E+06	0.5841
195	10-49-47-000	0.860	5/6	11.79	0.15	305.2	2.4E+06	0.4523
195	10-49-52-500	0.852	5/6	11.09	-0.27	304.9	2.4E+06	0.4524
191	9-46-5-000	0.850	5/6	4.95	-0.16	286.4	2.3E+06	0.4005
191	9-46-15-500	0.852	5/6	7.04	-0.16	290.9	2.3E+06	0.5409
198	13-51-33-500	0.858	5/10	3.98	0.28	299.9	2.3E+06	0.3573
198	13-51-51-500	0.856	5/10	5.04	0.21	298.1	2.3E+06	0.4900
198	13-52-32-500	0.856	5/10	5.96	0.02	297.6	2.3E+06	0.4975
198	13-52-35-500	0.856	5/10	7.04	0.05	297.4	2.3E+06	0.5942
198	13-53-4-000	0.847	5/10	7.97	0.10	293.2	2.3E+06	0.6637
198	13-53-6-000	0.850	5/10	8.01	0.26	295.9	2.3E+06	0.6712
198	13-53-7-000	0.851	5/10	8.18	0.23	297.0	2.3E+06	0.6959
198	13-53-17-000	0.846	5/10	10.07	0.39	299.6	2.4E+06	0.7388
198	13-53-18-500	0.845	5/10	9.96	0.28	300.2	2.4E+06	0.7215
225	11-54-45-000	0.852	5/10	4.01	-0.44	296.8	2.3E+06	0.2698
225	11-55-6-500	0.848	5/11	5.03	-0.67	291.2	2.3E+06	0.3505
225	11-55-20-500	0.852	5/10	7.94	-0.15	296.1	2.3E+06	0.5658
225	11-55-22-000	0.854	5/10	7.95	-0.15	299.3	2.4E+06	0.5851
225	11-48-47-500	0.855	10/2	5.08	-0.04	299.0	2.3E+06	0.3061
225	11-49-11-500	0.857	10/2	5.99	-0.30	299.3	2.3E+06	0.3632
225	11-49-15-000	0.856	10/2	7.10	-0.56	297.6	2.3E+06	0.4462
225	11-49-22-500	0.842	10/2	8.03	-0.21	285.9	2.3E+06	0.4587

Table F-1. Concluded.

Flight	Time	MINF	Camber	ALPT	BETA	QINF	RNPU	CNWP
225	11-49-26-500	0.845	10/2	8.07	-0.10	287.6	2.3E+06	0.4815
225	11-49-33-000	0.851	10/2	9.05	-0.10	295.0	2.3E+06	0.4381
225	11-51-4-500	0.853	10/2	9.10	-0.62	296.4	2.3E+06	0.4796
225	11-51-10-000	0.847	10/2	11.03	-0.41	292.0	2.3E+06	0.2847
225	11-51-17-500	0.844	10/2	12.22	0.17	301.6	2.4E+06	0.2170
216	10-50-51-000	0.853	10/2	6.04	-0.27	303.7	2.4E+06	0.3840
216	10-52-32-500	0.851	5/10	4.00	-0.18	301.0	2.4E+06	0.2904
216	10-53-13-500	0.849	5/10	4.01	-0.27	299.9	2.4E+06	0.2939
216	10-54-30-500	0.851	10/10	4.03	-0.01	301.2	2.4E+06	0.3363
216	10-54-43-000	0.850	10/10	4.08	-0.44	301.1	2.4E+06	0.3311
215	10-5-45-500	0.850	10/15	4.03	-0.33	255.6	2.0E+06	0.2065

Table F-2. Listing of data.

Flight 221, Wing sweep = 26°, Time = 14-5-23-500, MINF = 0.854, Camber = 0/2, ALPT = 5.93, BETA = -0.47, QINF = 300.0, RNPU = 2.4E+06, CNWP = 0.2288

η = 0.93		0.76		0.59		0.40	
			Upper Surface				
x/c	CP	*x/c*	CP	*x/c*	CP	*x/c*	CP
0.020	-0.665	0.000	0.840	0.000	1.093**	0.010	-0.955
0.060	-0.626	0.020	-0.853	0.020	-0.768	0.020	-0.997
0.110	-0.587	0.040	-0.684	0.060	-3.183**	0.060	-0.951
0.200	-0.320	0.060	-0.792	0.090	-0.824	0.110	-0.902
0.230	-0.486	0.090	-0.745	0.110	-0.840	0.140	-0.935
0.400	-0.223	0.130	-0.744	0.130	-0.748	0.190	-1.957**
0.490	-0.195	0.150	-0.757	0.150	-0.793	0.250	-0.940
0.590	-0.270	0.200	-0.640	0.210	-0.749	0.400	-0.727
0.630	-0.250	0.250	-0.748	0.250	-0.777	0.490	-0.382
0.700	-0.178	0.260	-0.703	0.340	-0.787	0.580	-0.315
0.750	-0.266	0.280	-0.734	0.370	-0.782	0.650	-0.335
0.810	-0.275	0.290	-0.728	0.400	-0.834	0.700	-0.334
0.840	-0.224	0.310	-0.751	0.410	2.556**	0.750	-0.393
0.900	-0.125	0.320	-0.739	0.430	-0.795	0.800	-0.371
0.960	-0.047	0.340	-0.703	0.440	-0.623	0.830	-0.274
		0.350	-0.435**	0.460	-0.389	0.900	-0.128
		0.370	-0.707	0.490	-0.187	0.960	0.008
		0.380	-0.760	0.500	-0.240		
		0.400	-0.610	0.520	-0.171		
		0.410	-0.386	0.540	-0.163		
		0.430	-0.221	0.550	-0.185		
		0.440	-0.120	0.580	-0.208		
		0.460	-0.176	0.600	-0.180		
		0.470	-0.113	0.610	-0.207		
		0.490	-0.133	0.650	0.679**		
		0.500	-0.149	0.700	-0.371		
		0.520	-0.178	0.750	-0.407		
		0.530	-0.167	0.820	-0.323		
		0.550	-0.226	0.890	-0.089		
		0.560	-0.175	0.900	-0.077		
		0.580	-0.212	0.960	0.057		
		0.590	-0.263				
		0.600	-0.300				
		0.640	-0.345				
		0.700	-0.320				
		0.750	-0.032**				
		0.820	-0.256				
		0.870	-0.220				
		0.930	-0.088				
		0.960	-0.027				
			Lower Surface				
0.020	-0.226	0.020	-0.006	0.020	0.085	0.020	0.422
0.110	-0.239	0.060	0.008	0.060	0.102	0.060	1.071**
0.230	-0.073	0.090	-0.065	0.090	1.016**	0.110	-0.044
0.400	-0.056	0.120	-0.122	0.120	-0.327	0.250	-0.224
0.490	-0.074	0.200	-0.128	0.200	-0.200	0.400	-0.224
0.630	1.760**	0.260	-0.228	0.250	-0.199	0.490	-0.317
0.750	0.030	0.400	-0.158	0.400	-0.187	0.580	-0.296
0.850	0.116	0.490	-0.173	0.490	-0.051	0.650	-0.141
0.900	0.192	0.580	-0.149	0.580	-0.212	0.750	0.102
0.960	0.164	0.640	0.045	0.650	-0.044	0.830	0.282
		0.750	0.173	0.750	-0.051	0.900	0.319
		0.870	0.213	0.890	0.266	0.960	0.258
		0.930	0.209	0.930	0.237		
		0.960	0.181	0.960	-2.060**		
CN =	0.254		0.394		0.382		0.477

Table F-2. Continued.

Flight 221, Wing sweep = 26°, Time = 14-5-24-000, MINF = 0.854, Camber = 0/2, ALPT = 5.80, BETA = 0.05, QINF = 300.0, RNPU = 2.4E+06, CNWP = 0.2409

η = 0.93		0.76		0.59		0.40	
			Upper Surface				
x/c	CP	*x/c*	CP	*x/c*	CP	*x/c*	CP
0.020	-0.657	0.000	0.836	0.000	0.890**	0.010	-0.955
0.060	-0.641	0.020	-0.853	0.020	-0.768	0.020	-0.976
0.110	-0.495	0.040	-0.680	0.060	-2.988**	0.060	-0.909
0.200	-0.320	0.060	-0.792	0.090	-0.834	0.110	-0.902
0.230	-0.449	0.090	-0.745	0.110	-0.849	0.140	-0.935
0.400	-0.223	0.130	-0.759	0.130	-0.748	0.190	-1.957**
0.490	-0.199	0.150	-0.761	0.150	-0.793	0.250	-0.940
0.590	-0.273	0.200	-0.640	0.210	-0.749	0.400	-0.713
0.630	-0.261	0.250	-0.763	0.250	-0.785	0.490	-0.382
0.700	-0.178	0.260	-0.703	0.340	-0.787	0.580	-0.315
0.750	-0.266	0.280	-0.734	0.370	-0.790	0.650	-0.325
0.810	-0.282	0.290	-0.743	0.400	-0.834	0.700	-0.329
0.840	-0.239	0.310	-0.751	0.410	2.556**	0.750	-0.397
0.900	-0.135	0.320	-0.739	0.430	-0.795	0.800	-0.368
0.960	-0.047	0.340	-0.703	0.440	-0.613	0.830	-0.279
		0.350	-0.435**	0.460	-0.378	0.900	-0.143
		0.370	-0.711	0.490	-0.172	0.960	0.008
		0.380	-0.764	0.500	-0.240		
		0.400	-0.610	0.520	-0.180		
		0.410	-0.373	0.540	-0.178		
		0.430	-0.209	0.550	-0.185		
		0.440	-0.132	0.580	-0.208		
		0.460	-0.176	0.600	-0.174		
		0.470	-0.126	0.610	-0.207		
		0.490	-0.129	0.650	0.625**		
		0.500	-0.149	0.700	-0.397		
		0.520	-0.186	0.750	-0.415		
		0.530	-0.163	0.820	-0.328		
		0.550	-0.226	0.890	-0.103		
		0.560	-0.200	0.900	-0.077		
		0.580	-0.212	0.960	0.057		
		0.590	-0.263				
		0.600	-0.261				
		0.640	-0.349				
		0.700	-0.320				
		0.750	-0.032**				
		0.820	-0.256				
		0.870	-0.224				
		0.930	-0.092				
		0.960	-0.034				
			Lower Surface				
0.020	-0.236	0.020	-0.003	0.020	0.077	0.020	0.422
0.110	-0.239	0.060	0.011	0.060	0.089	0.060	1.071**
0.230	-0.073	0.090	-0.065	0.090	1.016**	0.110	-0.044
0.400	-0.056	0.120	-0.100	0.120	-0.319	0.250	-0.218
0.490	-0.081	0.200	-0.125	0.200	-0.200	0.400	-0.239
0.630	1.760**	0.260	-0.243	0.250	-0.195	0.490	-0.317
0.750	0.018	0.400	-0.158	0.400	-0.187	0.580	-0.296
0.850	0.116	0.490	-0.173	0.490	-0.059	0.650	-0.141
0.900	0.192	0.580	-0.141	0.580	-0.212	0.750	0.102
0.960	0.160	0.640	0.041	0.650	-0.052	0.830	0.282
		0.750	0.178	0.750	-0.051	0.900	0.316
		0.870	0.231	0.890	0.266	0.960	0.258
		0.930	0.205	0.930	0.237		
		0.960	0.177	0.960	-2.004**		
CN =	0.244		0.398		0.386		0.472

Table F-2. Continued.

Flight 221, Wing sweep = 26°, Time = 14-4-17-500, MINF = 0.854, Camber = 0/2, ALPT = 5.99, BETA = -0.18, QINF = 300.3, RNPU = 2.4E+06, CNWP = 0.2490

η = 0.93		0.76		0.59		0.40	
			Upper Surface				
x/c	CP	*x/c*	CP	*x/c*	CP	*x/c*	CP
0.020	-0.701	0.000	0.825	0.000	0.865**	0.010	-0.964
0.060	-0.667	0.020	-0.898	0.020	-0.780	0.020	-0.964
0.110	-0.518	0.040	-0.701	0.060	-2.927**	0.060	-1.001
0.200	-0.384	0.060	-0.811	0.090	-0.849	0.110	-0.910
0.230	-0.383	0.090	-0.773	0.110	-0.864	0.140	-0.941
0.400	-0.205	0.130	-0.780	0.130	-0.772	0.190	-1.959**
0.490	-0.159	0.150	-0.786	0.150	-0.781	0.250	-0.971
0.590	-0.270	0.200	-0.669	0.210	-0.765	0.400	-0.736
0.630	-0.247	0.250	-0.783	0.250	-0.802	0.490	-0.455
0.700	-0.178	0.260	-0.726	0.340	-0.820	0.580	-0.325
0.750	-0.266	0.280	-0.757	0.370	-0.810	0.650	-0.324
0.810	-0.271	0.290	-0.757	0.400	-0.837	0.700	-0.317
0.840	-0.213	0.310	-0.768	0.410	2.550**	0.750	-0.375
0.900	-0.117	0.320	-0.754	0.430	-0.813	0.800	-0.343
0.960	-0.050	0.340	-0.741	0.440	-0.777	0.830	-0.272
		0.350	-0.418**	0.460	-0.770	0.900	-0.131
		0.370	-0.740	0.490	-0.221	0.960	0.018
		0.380	-0.789	0.500	-0.294		
		0.400	-0.686	0.520	-0.211		
		0.410	-0.751	0.540	-0.194		
		0.430	-0.406	0.550	-0.186		
		0.440	-0.227	0.580	-0.180		
		0.460	-0.224	0.600	-0.163		
		0.470	-0.134	0.610	-0.183		
		0.490	-0.122	0.650	0.635**		
		0.500	-0.132	0.700	-0.316		
		0.520	-0.136	0.750	-0.385		
		0.530	-0.134	0.820	-0.304		
		0.550	-0.187	0.890	-0.097		
		0.560	-0.177	0.900	-0.072		
		0.580	-0.174	0.960	0.057		
		0.590	-0.226				
		0.600	-0.259				
		0.640	-0.311				
		0.700	-0.305				
		0.750	-0.017**				
		0.820	-0.252				
		0.870	-0.224				
		0.930	-0.092				
		0.960	-0.023				
			Lower Surface				
0.020	-0.195	0.020	-0.002	0.020	0.112	0.020	0.445
0.110	-0.228	0.060	0.030	0.060	0.145	0.060	1.073**
0.230	-0.070	0.090	-0.051	0.090	1.011**	0.110	-0.033
0.400	-0.038	0.120	-0.104	0.120	-0.308	0.250	-0.207
0.490	-0.070	0.200	-0.117	0.200	-0.182	0.400	-0.228
0.630	1.754**	0.260	-0.232	0.250	-0.184	0.490	-0.306
0.750	0.014	0.400	-0.158	0.400	-0.176	0.580	-0.300
0.850	0.119	0.490	-0.170	0.490	-0.048	0.650	-0.137
0.900	0.192	0.580	-0.142	0.580	-0.208	0.750	0.103
0.960	0.159	0.640	0.048	0.650	-0.041	0.830	0.284
		0.750	0.176	0.750	-0.040	0.900	0.320
		0.870	0.224	0.890	0.269	0.960	0.257
		0.930	0.212	0.930	0.241		
		0.960	0.177	0.960	-1.959**		
CN =	0.240		0.415		0.407		0.493

Table F-2. Continued.

Flight 221, Wing sweep = 26°, Time = 14-6-39-000, MINF = 0.845, Camber = 0/2, ALPT = 8.49, BETA = -0.44, QINF = 290.2, RNPU = 2.3E+06, CNWP = 0.3880

η = 0.93		0.76		0.59		0.40	
			Upper Surface				
x/c	CP	*x/c*	CP	*x/c*	CP	*x/c*	CP
0.020	-0.993	0.000	0.689	0.000	0.821**	0.010	-1.239
0.060	-1.018	0.020	-1.246	0.020	-1.059	0.020	-1.281
0.110	-0.953	0.040	-1.000	0.060	-3.194**	0.060	-1.273
0.200	-0.775	0.060	-1.098	0.090	-1.108	0.110	-1.213
0.230	-0.747	0.090	-1.083	0.110	-1.141	0.140	-1.253
0.400	-0.774	0.130	-1.078	0.130	-1.043	0.190	-2.000**
0.490	-0.228	0.150	-1.073	0.150	-1.115	0.250	-1.241
0.590	-0.208	0.200	-0.973	0.210	-1.019	0.400	-0.879
0.630	-0.223	0.250	-1.056	0.250	-1.064	0.490	-0.794
0.700	-0.176	0.260	-0.970	0.340	-1.085	0.580	-0.738
0.750	-0.288	0.280	-1.021	0.370	-1.061	0.650	-0.564
0.810	-0.328	0.290	-1.005	0.400	-1.098	0.700	-0.513
0.840	-0.278	0.310	-1.036	0.410	2.666**	0.750	-0.308
0.900	-0.205	0.320	-1.006	0.430	-1.078	0.800	-0.250
0.960	-0.120	0.340	-0.995	0.440	-1.037	0.830	-0.138
		0.350	-0.514**	0.460	-1.075	0.900	-0.059
		0.370	-0.999	0.490	-1.019	0.960	-0.019
		0.380	-1.065	0.500	-1.104		
		0.400	-0.925	0.520	-1.033		
		0.410	-1.015	0.540	-1.046		
		0.430	-0.982	0.550	-1.080		
		0.440	-0.953	0.580	-0.743		
		0.460	-1.055	0.600	-0.517		
		0.470	-0.970	0.610	-0.455		
		0.490	-1.028	0.650	0.647**		
		0.500	-1.031	0.700	-0.361		
		0.520	-1.019	0.750	-0.401		
		0.530	-0.810	0.820	-0.124		
		0.550	-0.576	0.890	-0.037		
		0.560	-0.461	0.900	-0.028		
		0.580	-0.446	0.960	0.070		
		0.590	-0.432				
		0.600	-0.403				
		0.640	-0.210				
		0.700	-0.178				
		0.750	-0.010**				
		0.820	-0.143				
		0.870	-0.144				
		0.930	-0.049				
		0.960	-0.004				
			Lower Surface				
0.020	0.000	0.020	0.287	0.020	0.369	0.020	0.662
0.110	-0.100	0.060	0.210	0.060	0.276	0.060	1.130**
0.230	-0.021	0.090	0.107	0.090	1.196**	0.110	0.124
0.400	-0.058	0.120	0.044	0.120	-0.147	0.250	-0.066
0.490	-0.084	0.200	-0.004	0.200	-0.030	0.400	-0.103
0.630	1.843**	0.260	-0.124	0.250	-0.043	0.490	-0.196
0.750	-0.013	0.400	-0.074	0.400	-0.078	0.580	-0.225
0.850	0.076	0.490	-0.097	0.490	-0.022	0.650	-0.099
0.900	0.160	0.580	-0.122	0.580	-0.143	0.750	0.119
0.960	0.125	0.640	0.062	0.650	-0.038	0.830	0.297
		0.750	0.168	0.750	-0.026	0.900	0.325
		0.870	0.258	0.890	0.269	0.960	0.226
		0.930	0.198	0.930	0.238		
		0.960	0.153	0.960	-2.081**		
CN =	0.450		0.674		0.683		0.749

Table F-2. Continued.

Flight 221, Wing sweep = 26°, Time = 14-10-6-500, MINF = 0.845, Camber = 0/2, ALPT = 10.13, BETA = -0.65, QINF = 285.6, RNPU = 2.3E+06, CNWP = 0.3091

η = 0.93		0.76		0.59		0.40	
			Upper Surface				
x/c	CP	*x/c*	CP	*x/c*	CP	*x/c*	CP
0.020	-1.158	0.000	0.567	0.000	0.674**	0.010	-1.373
0.060	-1.151	0.020	-1.448	0.020	-1.225	0.020	-1.394
0.110	-0.979	0.040	-1.174	0.060	-3.458**	0.060	-1.412
0.200	-0.946	0.060	-1.213	0.090	-1.245	0.110	-1.355
0.230	-0.874	0.090	-1.211	0.110	-1.261	0.140	-1.350
0.400	-0.730	0.130	-1.197	0.130	-1.157	0.190	-2.000**
0.490	-0.149	0.150	-1.186	0.150	-1.231	0.250	-1.320
0.590	-0.266	0.200	-1.106	0.210	-1.151	0.400	-0.972
0.630	-0.274	0.250	-1.163	0.250	-1.163	0.490	-0.811
0.700	-0.201	0.260	-1.070	0.340	-0.675	0.580	-0.569
0.750	-0.299	0.280	-1.039	0.370	-0.640	0.650	-0.391
0.810	-0.339	0.290	-0.938	0.400	-0.688	0.700	-0.385
0.840	-0.308	0.310	-0.888	0.410	-3.045**	0.750	-0.365
0.900	-0.233	0.320	-0.891	0.430	-0.628	0.800	-0.303
0.960	-0.151	0.340	-0.794	0.440	-0.586	0.830	-0.282
		0.350	-0.415**	0.460	-0.616	0.900	-0.191
		0.370	-0.695	0.490	-0.528	0.960	-0.094
		0.380	-0.720	0.500	-0.610		
		0.400	-0.581	0.520	-0.570		
		0.410	-0.630	0.540	-0.561		
		0.430	-0.595	0.550	-0.581		
		0.440	-0.529	0.580	-0.589		
		0.460	-0.609	0.600	-0.512		
		0.470	-0.528	0.610	-0.489		
		0.490	-0.535	0.650	0.563**		
		0.500	-0.526	0.700	-0.496		
		0.520	-0.537	0.750	-0.580		
		0.530	-0.483	0.820	-0.367		
		0.550	-0.526	0.890	-0.285		
		0.560	-0.432	0.900	-0.329		
		0.580	-0.471	0.960	-0.222		
		0.590	-0.461				
		0.600	-0.460				
		0.640	-0.348				
		0.700	-0.334				
		0.750	-0.020**				
		0.820	-0.211				
		0.870	-0.202				
		0.930	-0.215				
		0.960	-0.203				
			Lower Surface				
0.020	0.113	0.020	0.401	0.020	0.491	0.020	0.721
0.110	-0.052	0.060	0.293	0.060	0.354	0.060	1.150**
0.230	0.008	0.090	0.171	0.090	1.249**	0.110	0.212
0.400	-0.049	0.120	0.112	0.120	-0.103	0.250	-0.004
0.490	-0.076	0.200	0.066	0.200	0.024	0.400	-0.050
0.630	2.046**	0.260	-0.071	0.250	0.019	0.490	-0.159
0.750	-0.032	0.400	-0.061	0.400	-0.046	0.580	-0.196
0.850	0.054	0.490	-0.117	0.490	-0.036	0.650	-0.107
0.900	0.133	0.580	-0.131	0.580	-0.151	0.750	0.103
0.960	0.098	0.640	0.029	0.650	-0.036	0.830	0.277
		0.750	0.138	0.750	-0.021	0.900	0.300
		0.870	0.162	0.890	0.199	0.960	0.198
		0.930	0.123	0.930	0.143		
		0.960	0.065	0.960	-2.193**		
CN =	0.489		0.668		0.678		0.818

Table F-2. Continued.

Flight 198, Wing sweep = 26°, Time = 13-47-53-500, MINF = 0.850, Camber = 0/2, ALPT = 6.10, BETA = 0.15, QINF = 294.6, RNPU = 2.3E+06, CNWP = 0.3599

η = 0.93		0.76		0.59		0.40	
			Upper Surface				
x/c	CP	*x/c*	CP	*x/c*	CP	*x/c*	CP
0.020	-0.640	0.000	0.897	0.000	-5.744**	0.010	-0.943**
0.060	-0.666	0.020	-0.866**	0.020	-0.750**	0.020	-0.967**
0.110	-0.606	0.040	-0.657	0.060	-1.422**	0.060	-1.004
0.200	-0.306	0.060	-0.765	0.090	-0.826	0.110	-0.871
0.230	-0.448	0.090	-0.721	0.110	-0.866	0.140	1.917**
0.400	-0.195	0.130	-0.757	0.130	-0.790	0.190	-5.609**
0.490	-0.210	0.150	-0.732	0.150	-0.735	0.250	-0.918
0.590	-0.237	0.200	-0.616	0.210	-0.812	0.400	-0.685
0.630	-0.255	0.250	-0.755	0.250	-0.809	0.490	-0.306
0.700	-0.216	0.260	-0.708	0.340	-0.837	0.580	-0.282
0.750	-0.218	0.280	-0.760	0.370	-0.825	0.650	-0.360
0.810	-0.246	0.290	-0.772	0.400	-0.834	0.700	-0.327
0.840	-0.206	0.310	-0.719	0.410	-0.763	0.750	-0.386
0.900	-0.101	0.320	-0.707	0.430	-0.505	0.800	-0.354
0.960	0.003	0.340	-0.753	0.440	-0.313	0.830	-0.298
		0.350	-0.348**	0.460	-0.242	0.900	-0.129
		0.370	-0.725	0.490	-0.159	0.960	0.049
		0.380	-0.522	0.500	-0.169		
		0.400	-0.198	0.520	-0.165		
		0.410	-0.181	0.540	-0.169		
		0.430	-0.125	0.550	-0.177		
		0.440	-0.082	0.580	-0.172		
		0.460	-0.151	0.600	-0.207		
		0.470	-0.130	0.610	-0.151		
		0.490	-0.141	0.650	-2.835**		
		0.500	-0.143	0.700	-0.436		
		0.520	-0.162	0.750	-0.352		
		0.530	-0.171	0.820	-0.309		
		0.550	-0.201	0.890	-0.081		
		0.560	-0.206	0.900	-0.051		
		0.580	-0.192	0.960	0.053		
		0.590	-0.242				
		0.600	-0.287				
		0.640	-2.670**				
		0.700	-0.312				
		0.750	-0.287				
		0.820	-2.847**				
		0.870	-0.188				
		0.930	-0.055				
		0.960	0.016				
			Lower Surface				
0.020	-0.056	0.020	0.014	0.020	0.131	0.020	0.479
0.110	-0.199	0.060	0.076	0.060	0.166	0.060	3.240**
0.230	-0.057	0.090	-0.013	0.090	0.042	0.110	-0.021
0.400	-0.065	0.120	-0.085	0.120	-0.311	0.250	-0.170
0.490	-0.095	0.200	-0.058	0.200	-0.149	0.400	-0.190
0.630	3.284**	0.260	-0.187	0.250	-0.155	0.490	-0.264
0.750	0.038	0.400	-2.865**	0.400	-0.160	0.580	-0.285
0.850	0.130	0.490	-0.133	0.490	0.004	0.650	-0.084
0.900	0.182	0.580	-0.074	0.580	-0.184	0.750	0.174
0.960	0.166	0.640	0.281	0.650	0.029	0.830	0.310
		0.750	0.172	0.750	0.274	0.900	0.385
		0.870	0.245	0.890	********	0.960	0.304
		0.930	0.240	0.930	0.290		
		0.960	0.172	0.960	-2.864**		
CN =	0.245		0.407		0.460		0.459

Table F-2. Continued.

Flight 198, Wing sweep = 26°, Time = 13-48-30-500, MINF = 0.850, Camber = 0/2, ALPT = 6.97, BETA = -0.01, QINF = 295.0, RNPU = 2.3E+06, CNWP = 0.4476

η = 0.93		0.76		0.59		0.40	
			Upper Surface				
x/c	CP	*x/c*	CP	*x/c*	CP	*x/c*	CP
0.020	-0.754	0.000	0.868	0.000	-5.737**	0.010	-1.051**
0.060	-0.799	0.020	-1.000**	0.020	-0.853**	0.020	-1.054**
0.110	-0.747	0.040	-0.724	0.060	-1.538**	0.060	-1.102
0.200	-0.624	0.060	-0.845	0.090	-0.913	0.110	-0.973
0.230	-0.508	0.090	-0.860	0.110	-0.986	0.140	1.898**
0.400	-0.160	0.130	-0.878	0.130	-0.927	0.190	-5.603**
0.490	-0.172	0.150	-0.863	0.150	-0.855	0.250	-0.992
0.590	-0.205	0.200	-0.763	0.210	-0.919	0.400	-0.750
0.630	-0.238	0.250	-0.876	0.250	-0.907	0.490	-0.655
0.700	-0.212	0.260	-0.814	0.340	-0.948	0.580	-0.487
0.750	-0.225	0.280	-0.871	0.370	-0.931	0.650	-0.336
0.810	-0.257	0.290	-0.883	0.400	-0.932	0.700	-0.298
0.840	-0.224	0.310	-0.824	0.410	-0.883	0.750	-0.314
0.900	-0.128	0.320	-0.818	0.430	-0.944	0.800	-0.276
0.960	-0.036	0.340	-0.861	0.440	-0.918	0.830	-0.244
		0.350	-0.381**	0.460	-0.922	0.900	-0.066
		0.370	-0.830	0.490	-0.853	0.960	0.058
		0.380	-0.851	0.500	-0.942		
		0.400	-0.775	0.520	-0.852		
		0.410	-0.870	0.540	-0.525		
		0.430	-0.851	0.550	-0.381		
		0.440	-0.805	0.580	-0.282		
		0.460	-0.887	0.600	-0.241		
		0.470	-0.865	0.610	-0.111		
		0.490	-0.504	0.650	-2.833**		
		0.500	-0.315	0.700	-0.187		
		0.520	-0.243	0.750	-0.238		
		0.530	-0.163	0.820	-0.231		
		0.550	-0.131	0.890	-0.064		
		0.560	-0.101	0.900	-0.038		
		0.580	-0.081	0.960	0.043		
		0.590	-0.106				
		0.600	-0.132				
		0.640	-2.669**				
		0.700	-0.203				
		0.750	-0.230				
		0.820	-2.846**				
		0.870	-0.177				
		0.930	-0.050				
		0.960	0.024				
			Lower Surface				
0.020	-0.010	0.020	0.145	0.020	0.239	0.020	0.562
0.110	-0.154	0.060	0.148	0.060	0.244	0.060	3.232**
0.230	-0.048	0.090	0.056	0.090	0.115	0.110	0.039
0.400	-0.064	0.120	0.010	0.120	-0.252	0.250	-0.115
0.490	-0.075	0.200	-0.009	0.200	-0.055	0.400	-0.141
0.630	3.276**	0.260	-0.138	0.250	-0.094	0.490	-0.221
0.750	0.035	0.400	-2.863**	0.400	-0.122	0.580	-0.257
0.850	0.115	0.490	-0.121	0.490	0.017	0.650	-0.079
0.900	0.173	0.580	-0.062	0.580	-0.164	0.750	0.181
0.960	0.150	0.640	0.287	0.650	0.040	0.830	0.316
		0.750	0.169	0.750	0.286	0.900	0.390
		0.870	0.251	0.890	********	0.960	0.304
		0.930	0.252	0.930	0.290		
		0.960	0.173	0.960	-2.862**		
CN =	0.285		0.520		0.585		0.552

Table F-2. Continued.

Flight 198, Wing sweep = 26°, Time = 13-48-42-000, MINF = 0.855, Camber = 0/2, ALPT = 8.05, BETA = 0.15, QINF = 299.2, RNPU = 2.3E+06, CNWP = 0.5304

η = 0.93		0.76		0.59		0.40	
			Upper Surface				
x/c	CP	*x/c*	CP	*x/c*	CP	*x/c*	CP
0.020	-0.820	0.000	0.829	0.000	-5.662**	0.010	-1.090**
0.060	-0.906	0.020	-1.031**	0.020	-0.922**	0.020	-1.149**
0.110	-0.828	0.040	-0.838	0.060	-1.475**	0.060	-1.161
0.200	-0.735	0.060	-0.931	0.090	-0.995	0.110	-1.068
0.230	-0.612	0.090	-0.934	0.110	-1.043	0.140	1.889**
0.400	-0.677	0.130	-0.934	0.130	-0.989	0.190	-5.530**
0.490	-0.357	0.150	-0.929	0.150	-0.933	0.250	-1.097
0.590	-0.169	0.200	-0.847	0.210	-0.990	0.400	-0.805
0.630	-0.205	0.250	-0.932	0.250	-0.964	0.490	-0.749
0.700	-0.187	0.260	-0.888	0.340	-1.041	0.580	-0.643
0.750	-0.227	0.280	-0.938	0.370	-1.002	0.650	-0.604
0.810	-0.266	0.290	-0.960	0.400	-0.996	0.700	-0.659
0.840	-0.240	0.310	-0.897	0.410	-0.978	0.750	-0.505
0.900	-0.153	0.320	-0.888	0.430	-1.029	0.800	-0.206
0.960	-0.061	0.340	-0.944	0.440	-0.999	0.830	-0.143
		0.350	-0.392**	0.460	-1.009	0.900	-0.009
		0.370	-0.902	0.490	-0.934	0.960	0.034
		0.380	-0.914	0.500	-1.020		
		0.400	-0.852	0.520	-1.003		
		0.410	-0.935	0.540	-1.010		
		0.430	-0.936	0.550	-0.973		
		0.440	-0.863	0.580	-0.935		
		0.460	-0.985	0.600	-0.955		
		0.470	-0.960	0.610	-0.900		
		0.490	-0.912	0.650	-2.798**		
		0.500	-0.913	0.700	-0.329		
		0.520	-0.902	0.750	-0.303		
		0.530	-0.889	0.820	-0.104		
		0.550	-0.906	0.890	0.009		
		0.560	-0.933	0.900	0.006		
		0.580	-0.737	0.960	0.082		
		0.590	-0.499				
		0.600	-0.417				
		0.640	-2.636**				
		0.700	-0.139				
		0.750	-0.094				
		0.820	-2.811**				
		0.870	-0.110				
		0.930	-0.010				
		0.960	0.045				
			Lower Surface				
0.020	0.058	0.020	0.251	0.020	0.324	0.020	0.648
0.110	-0.108	0.060	0.219	0.060	0.304	0.060	3.183**
0.230	-0.030	0.090	0.119	0.090	0.181	0.110	0.089
0.400	-0.064	0.120	0.043	0.120	-0.186	0.250	-0.075
0.490	-0.086	0.200	0.030	0.200	0.003	0.400	-0.114
0.630	3.226**	0.260	-0.097	0.250	-0.042	0.490	-0.192
0.750	0.049	0.400	-2.828**	0.400	-0.079	0.580	-0.233
0.850	0.112	0.490	-0.101	0.490	0.034	0.650	-0.068
0.900	0.162	0.580	-0.047	0.580	-0.152	0.750	0.189
0.960	0.142	0.640	0.294	0.650	0.050	0.830	0.326
		0.750	0.185	0.750	0.292	0.900	0.398
		0.870	0.276	0.890	********	0.960	0.283
		0.930	0.247	0.930	0.296		
		0.960	0.181	0.960	-2.827**		
CN =	0.412		0.642		0.731		0.663

Table F-2. Continued.

Flight 198, Wing sweep = 26°, Time = 13-48-48-500, MINF = 0.857, Camber = 0/2, ALPT = 8.60, BETA = 0.47, QINF = 301.2, RNPU = 2.4E+06, CNWP = 0.5761

η = 0.93		0.76		0.59		0.40	
			Upper Surface				
x/c	CP	*x/c*	CP	*x/c*	CP	*x/c*	CP
0.020	-0.865	0.000	0.803	0.000	-5.628**	0.010	-1.150**
0.060	-0.949	0.020	-1.100**	0.020	-0.958**	0.020	-1.152**
0.110	-0.906	0.040	-0.885	0.060	-1.582**	0.060	-1.199
0.200	-0.785	0.060	-0.944	0.090	-1.034	0.110	-1.104
0.230	-0.676	0.090	-0.966	0.110	-1.093	0.140	1.854**
0.400	-0.729	0.130	-0.965	0.130	-1.034	0.190	-5.496**
0.490	-0.667	0.150	-0.970	0.150	-0.981	0.250	-1.150
0.590	-0.141	0.200	-0.884	0.210	-1.035	0.400	-0.838
0.630	-0.196	0.250	-0.994	0.250	-1.012	0.490	-0.776
0.700	-0.175	0.260	-0.913	0.340	-1.084	0.580	-0.681
0.750	-0.218	0.280	-0.989	0.370	-1.062	0.650	-0.633
0.810	-0.268	0.290	-1.002	0.400	-1.037	0.700	-0.675
0.840	-0.235	0.310	-0.935	0.410	-1.018	0.750	-0.520
0.900	-0.166	0.320	-0.929	0.430	-1.087	0.800	-0.215
0.960	-0.072	0.340	-0.987	0.440	-1.038	0.830	-0.140
		0.350	-0.403**	0.460	-1.052	0.900	-0.040
		0.370	-0.947	0.490	-0.968	0.960	0.006
		0.380	-0.956	0.500	-1.070		
		0.400	-0.882	0.520	-1.052		
		0.410	-0.977	0.540	-1.062		
		0.430	-0.969	0.550	-1.032		
		0.440	-0.900	0.580	-1.002		
		0.460	-1.044	0.600	-1.013		
		0.470	-0.977	0.610	-0.952		
		0.490	-0.952	0.650	-2.783**		
		0.500	-0.953	0.700	-0.377		
		0.520	-0.945	0.750	-0.394		
		0.530	-0.928	0.820	-0.191		
		0.550	-0.956	0.890	-0.011		
		0.560	-0.961	0.900	-0.015		
		0.580	-0.677	0.960	0.041		
		0.590	-0.524				
		0.600	-0.471				
		0.640	-2.623**				
		0.700	-0.258				
		0.750	-0.101				
		0.820	-2.796**				
		0.870	-0.088				
		0.930	-0.006				
		0.960	0.034				
			Lower Surface				
0.020	0.132	0.020	0.298	0.020	0.365	0.020	0.703
0.110	-0.091	0.060	0.251	0.060	0.344	0.060	3.158**
0.230	-0.030	0.090	0.149	0.090	0.215	0.110	0.146
0.400	-0.086	0.120	0.065	0.120	-0.167	0.250	-0.030
0.490	-0.089	0.200	0.048	0.200	0.020	0.400	-0.095
0.630	3.201**	0.260	-0.078	0.250	-0.023	0.490	-0.180
0.750	0.018	0.400	-2.813**	0.400	-0.072	0.580	-0.235
0.850	0.100	0.490	-0.101	0.490	0.030	0.650	-0.064
0.900	0.149	0.580	-0.058	0.580	-0.154	0.750	0.169
0.960	0.137	0.640	0.282	0.650	0.031	0.830	0.320
		0.750	0.163	0.750	0.279	0.900	0.386
		0.870	0.239	0.890	********	0.960	0.286
		0.930	0.224	0.930	0.275		
		0.960	0.158	0.960	-2.812**		
CN =	0.455		0.673		0.782		0.708

Table F-2. Continued.

Flight 198, Wing sweep = 26°, Time = 13-48-54-000, MINF = 0.857, Camber = 0/2, ALPT = 9.06, BETA = 0.26, QINF = 301.0, RNPU = 2.4E+06, CNWP = 0.5635

η = 0.93		0.76		0.59		0.40	
			Upper Surface				
x/c	CP	*x/c*	CP	*x/c*	CP	*x/c*	CP
0.020	-0.929	0.000	0.763	0.000	-5.632**	0.010	-1.192**
0.060	-0.996	0.020	-1.173**	0.020	-1.004**	0.020	-1.216**
0.110	-0.941	0.040	-0.939	0.060	-1.539**	0.060	-1.284
0.200	-0.851	0.060	-1.021	0.090	-1.087	0.110	-1.183
0.230	-0.714	0.090	-1.019	0.110	-1.147	0.140	1.892**
0.400	-0.760	0.130	-1.044	0.130	-1.083	0.190	-5.500**
0.490	-0.711	0.150	-1.019	0.150	-1.015	0.250	-1.180
0.590	-0.157	0.200	-0.934	0.210	-1.073	0.400	-0.872
0.630	-0.196	0.250	-1.047	0.250	-1.056	0.490	-0.787
0.700	-0.179	0.260	-0.961	0.340	-1.123	0.580	-0.718
0.750	-0.245	0.280	-1.026	0.370	-1.094	0.650	-0.638
0.810	-0.290	0.290	-1.039	0.400	-1.088	0.700	-0.686
0.840	-0.258	0.310	-0.974	0.410	-1.070	0.750	-0.447
0.900	-0.180	0.320	-0.960	0.430	-1.119	0.800	-0.243
0.960	-0.086	0.340	-1.026	0.440	-1.081	0.830	-0.159
		0.350	-0.419**	0.460	-1.093	0.900	-0.063
		0.370	-0.987	0.490	-1.019	0.960	-0.015
		0.380	-0.997	0.500	-1.099		
		0.400	-0.926	0.520	-1.052		
		0.410	-1.023	0.540	-1.097		
		0.430	-1.011	0.550	-1.070		
		0.440	-0.938	0.580	-0.907		
		0.460	-1.066	0.600	-0.637		
		0.470	-1.030	0.610	-0.451		
		0.490	-0.910	0.650	-2.785**		
		0.500	-0.740	0.700	-0.402		
		0.520	-0.658	0.750	-0.434		
		0.530	-0.512	0.820	-0.270		
		0.550	-0.479	0.890	-0.096		
		0.560	-0.440	0.900	-0.099		
		0.580	-0.415	0.960	-0.051		
		0.590	-0.432				
		0.600	-0.433				
		0.640	-2.624**				
		0.700	-0.327				
		0.750	-0.169				
		0.820	-2.798**				
		0.870	-0.127				
		0.930	-0.068				
		0.960	-0.050				
			Lower Surface				
0.020	0.132	0.020	0.344	0.020	0.412	0.020	0.736
0.110	-0.071	0.060	0.277	0.060	0.364	0.060	3.160**
0.230	-0.015	0.090	0.173	0.090	0.242	0.110	0.166
0.400	-0.049	0.120	0.095	0.120	-0.128	0.250	-0.010
0.490	-0.096	0.200	0.069	0.200	0.040	0.400	-0.066
0.630	3.204**	0.260	-0.064	0.250	-0.001	0.490	-0.165
0.750	0.007	0.400	-2.815**	0.400	-0.052	0.580	-0.225
0.850	0.093	0.490	-0.101	0.490	0.027	0.650	-0.079
0.900	0.144	0.580	-0.061	0.580	-0.147	0.750	0.184
0.960	0.125	0.640	0.272	0.650	0.031	0.830	0.316
		0.750	0.155	0.750	0.272	0.900	0.386
		0.870	0.216	0.890	********	0.960	0.280
		0.930	0.195	0.930	0.257		
		0.960	0.114	0.960	-2.814**		
CN =	0.486		0.681		0.798		0.744

Table F-2. Continued.

Flight 198, Wing sweep = 26°, Time = 13-48-56-500, MINF = 0.855, Camber = 0/2, ALPT = 9.93, BETA = 0.23, QINF = 299.4, RNPU = 2.3E+06, CNWP = 0.4326

η = 0.93		0.76		0.59		0.40	
			Upper Surface				
x/c	CP	*x/c*	CP	*x/c*	CP	*x/c*	CP
0.020	-1.018	0.000	0.703	0.000	-5.659**	0.010	-1.271**
0.060	-1.081	0.020	-1.267**	0.020	-1.122**	0.020	-1.284**
0.110	-1.040	0.040	-1.048	0.060	-1.615**	0.060	-1.353
0.200	-0.944	0.060	-1.102	0.090	-1.179	0.110	-1.247
0.230	-0.809	0.090	-1.100	0.110	-1.214	0.140	1.858**
0.400	-0.875	0.130	-1.088	0.130	-1.159	0.190	-5.527**
0.490	-0.425	0.150	-1.082	0.150	-1.101	0.250	-1.242
0.590	-0.137	0.200	-1.009	0.210	-1.176	0.400	-0.930
0.630	-0.211	0.250	-1.129	0.250	-1.125	0.490	-0.808
0.700	-0.189	0.260	-1.040	0.340	-0.833	0.580	-0.556
0.750	-0.252	0.280	-1.110	0.370	-0.648	0.650	-0.476
0.810	-0.305	0.290	-1.115	0.400	-0.625	0.700	-0.476
0.840	-0.280	0.310	-1.037	0.410	-0.612	0.750	-0.418
0.900	-0.197	0.320	-1.038	0.430	-0.645	0.800	-0.335
0.960	-0.106	0.340	-1.008	0.440	-0.607	0.830	-0.363
		0.350	-0.399**	0.460	-0.605	0.900	-0.241
		0.370	-0.914	0.490	-0.537	0.960	-0.145
		0.380	-0.848	0.500	-0.602		
		0.400	-0.712	0.520	-0.606		
		0.410	-0.758	0.540	-0.579		
		0.430	-0.723	0.550	-0.559		
		0.440	-0.618	0.580	-0.541		
		0.460	-0.661	0.600	-0.541		
		0.470	-0.571	0.610	-0.417		
		0.490	-0.558	0.650	-2.798**		
		0.500	-0.512	0.700	-0.449		
		0.520	-0.507	0.750	-0.467		
		0.530	-0.461	0.820	-0.399		
		0.550	-0.453	0.890	-0.301		
		0.560	-0.441	0.900	-0.290		
		0.580	-0.422	0.960	-0.293		
		0.590	-0.437				
		0.600	-0.443				
		0.640	-2.636**				
		0.700	-0.331				
		0.750	-0.215				
		0.820	-2.810**				
		0.870	-0.205				
		0.930	-0.158				
		0.960	-0.137				
			Lower Surface				
0.020	0.154	0.020	0.403	0.020	0.494	0.020	0.778
0.110	-0.022	0.060	0.332	0.060	0.434	0.060	3.178**
0.230	-0.002	0.090	0.214	0.090	0.303	0.110	0.230
0.400	-0.085	0.120	0.131	0.120	-0.090	0.250	0.031
0.490	-0.103	0.200	0.111	0.200	0.076	0.400	-0.028
0.630	3.222**	0.260	-0.026	0.250	0.037	0.490	-0.149
0.750	-0.006	0.400	-2.827**	0.400	-0.041	0.580	-0.204
0.850	0.072	0.490	-0.096	0.490	0.010	0.650	-0.084
0.900	0.130	0.580	-0.071	0.580	-0.154	0.750	0.186
0.960	0.115	0.640	0.253	0.650	0.004	0.830	0.302
		0.750	0.124	0.750	0.245	0.900	0.365
		0.870	0.182	0.890	********	0.960	0.248
		0.930	0.147	0.930	0.188		
		0.960	0.046	0.960	-2.826**		
CN =	0.505		0.682		0.731		0.788

Table F-2. Continued.

Flight 198, Wing sweep = 26°, Time = 13-49-9-500, MINF = 0.853, Camber = 0/2, ALPT = 10.94, BETA = 0.65, QINF = 298.5, RNPU = 2.3E+06, CNWP = 0.3605

η = 0.93		0.76		0.59		0.40	
			Upper Surface				
x/c	CP	*x/c*	CP	*x/c*	CP	*x/c*	CP
0.020	-1.108	0.000	0.644	0.000	-5.683**	0.010	-1.383**
0.060	-1.168	0.020	-1.369**	0.020	-1.180**	0.020	-1.385**
0.110	-1.172	0.040	-1.135	0.060	-1.693**	0.060	-1.454
0.200	-1.044	0.060	-1.190	0.090	-1.254	0.110	-1.341
0.230	-0.878	0.090	-1.191	0.110	-1.290	0.140	1.869**
0.400	-0.612	0.130	-1.177	0.130	-1.239	0.190	-5.550**
0.490	-0.175	0.150	-1.163	0.150	-1.163	0.250	-1.093
0.590	-0.182	0.200	-1.083	0.210	-1.176	0.400	-0.752
0.630	-0.237	0.250	-1.111	0.250	-0.799	0.490	-0.716
0.700	-0.222	0.260	-0.993	0.340	-0.673	0.580	-0.634
0.750	-0.275	0.280	-1.006	0.370	-0.626	0.650	-0.546
0.810	-0.298	0.290	-0.938	0.400	-0.619	0.700	-0.586
0.840	-0.272	0.310	-0.794	0.410	-0.590	0.750	-0.507
0.900	-0.226	0.320	-0.801	0.430	-0.623	0.800	-0.450
0.960	-0.105	0.340	-0.771	0.440	-0.600	0.830	-0.449
		0.350	-0.272**	0.460	-0.582	0.900	-0.345
		0.370	-0.625	0.490	-0.530	0.960	-0.269
		0.380	-0.604	0.500	-0.586		
		0.400	-0.542	0.520	-0.565		
		0.410	-0.616	0.540	-0.558		
		0.430	-0.527	0.550	-0.534		
		0.440	-0.522	0.580	-0.508		
		0.460	-0.546	0.600	-0.509		
		0.470	-0.493	0.610	-0.431		
		0.490	-0.458	0.650	-2.813**		
		0.500	-0.451	0.700	-0.442		
		0.520	-0.423	0.750	-0.492		
		0.530	-0.437	0.820	-0.392		
		0.550	-0.401	0.890	-0.337		
		0.560	-0.421	0.900	-0.355		
		0.580	-0.355	0.960	-0.330		
		0.590	-0.400				
		0.600	-0.436				
		0.640	-2.651**				
		0.700	-0.397				
		0.750	-0.298				
		0.820	-2.825**				
		0.870	-0.226				
		0.930	-0.294				
		0.960	-0.251				
			Lower Surface				
0.020	0.252	0.020	0.487	0.020	0.567	0.020	0.801
0.110	0.006	0.060	0.387	0.060	0.477	0.060	3.182**
0.230	0.014	0.090	0.268	0.090	0.345	0.110	0.280
0.400	-0.069	0.120	0.184	0.120	-0.032	0.250	0.076
0.490	-0.094	0.200	0.145	0.200	0.115	0.400	0.002
0.630	3.225**	0.260	-0.003	0.250	0.076	0.490	-0.111
0.750	-0.013	0.400	-2.842**	0.400	-0.022	0.580	-0.196
0.850	0.058	0.490	-0.099	0.490	0.018	0.650	-0.069
0.900	0.109	0.580	-0.092	0.580	-0.160	0.750	0.176
0.960	0.087	0.640	0.252	0.650	-0.016	0.830	0.294
		0.750	0.125	0.750	0.225	0.900	0.330
		0.870	0.173	0.890	********	0.960	0.203
		0.930	0.134	0.930	0.151		
		0.960	0.044	0.960	-2.841**		
CN =	0.486		0.687		0.715		0.808

Table F-2. Continued.

Flight 198, Wing sweep = 26°, Time = 13-44-5-000, MINF = 0.864, Camber = 0/2, ALPT = 7.04, BETA = 0.47, QINF = 306.9, RNPU = 2.4E+06, CNWP = 0.4640

η = 0.93		0.76		0.59		0.40	
			Upper Surface				
x/c	CP	*x/c*	CP	*x/c*	CP	*x/c*	CP
0.020	-0.687	0.000	0.866	0.000	-5.530**	0.010	-0.991**
0.060	-0.733	0.020	-0.889**	0.020	-0.783**	0.020	-1.014**
0.110	-0.707	0.040	-0.669	0.060	-1.455**	0.060	-1.040
0.200	-0.600	0.060	-0.783	0.090	-0.847	0.110	-0.917
0.230	-0.489	0.090	-0.785	0.110	-0.905	0.140	1.836**
0.400	-0.568	0.130	-0.806	0.130	-0.868	0.190	-5.401**
0.490	-0.180	0.150	-0.799	0.150	-0.799	0.250	-0.968
0.590	-0.172	0.200	-0.707	0.210	-0.861	0.400	-0.721
0.630	-0.211	0.250	-0.818	0.250	-0.865	0.490	-0.695
0.700	-0.186	0.260	-0.770	0.340	-0.912	0.580	-0.551
0.750	-0.209	0.280	-0.829	0.370	-0.903	0.650	-0.548
0.810	-0.233	0.290	-0.832	0.400	-0.896	0.700	-0.576
0.840	-0.208	0.310	-0.783	0.410	-0.865	0.750	-0.624
0.900	-0.117	0.320	-0.775	0.430	-0.909	0.800	-0.204
0.960	-0.021	0.340	-0.822	0.440	-0.883	0.830	-0.167
		0.350	-0.357**	0.460	-0.887	0.900	-0.019
		0.370	-0.798	0.490	-0.827	0.960	0.063
		0.380	-0.810	0.500	-0.915		
		0.400	-0.756	0.520	-0.887		
		0.410	-0.833	0.540	-0.906		
		0.430	-0.807	0.550	-0.875		
		0.440	-0.760	0.580	-0.837		
		0.460	-0.853	0.600	-0.846		
		0.470	-0.833	0.610	-0.737		
		0.490	-0.794	0.650	-2.738**		
		0.500	-0.806	0.700	-0.233		
		0.520	-0.793	0.750	-0.204		
		0.530	-0.786	0.820	-0.141		
		0.550	-0.807	0.890	-0.014		
		0.560	-0.822	0.900	0.004		
		0.580	-0.536	0.960	0.077		
		0.590	-0.360				
		0.600	-0.284				
		0.640	-2.581**				
		0.700	-0.106				
		0.750	-0.145				
		0.820	-2.750**				
		0.870	-0.139				
		0.930	-0.024				
		0.960	0.037				
			Lower Surface				
0.020	-0.057	0.020	0.104	0.020	0.198	0.020	0.552
0.110	-0.188	0.060	0.127	0.060	0.220	0.060	3.092**
0.230	-0.066	0.090	0.036	0.090	0.100	0.110	0.036
0.400	-0.084	0.120	-0.038	0.120	-0.217	0.250	-0.134
0.490	-0.094	0.200	-0.034	0.200	-0.087	0.400	-0.165
0.630	3.134**	0.260	-0.162	0.250	-0.124	0.490	-0.249
0.750	0.022	0.400	-2.767**	0.400	-0.138	0.580	-0.297
0.850	0.110	0.490	-0.131	0.490	0.012	0.650	-0.091
0.900	0.163	0.580	-0.082	0.580	-0.187	0.750	0.183
0.960	0.152	0.640	0.269	0.650	0.024	0.830	0.311
		0.750	0.170	0.750	0.281	0.900	0.389
		0.870	0.250	0.890	********	0.960	0.303
		0.930	0.241	0.930	0.293		
		0.960	0.176	0.960	-2.766**		
CN =	0.306		0.527		0.605		0.564

Table F-2. Continued.

Flight 198, Wing sweep = 26°, Time = 13-44-36-000, MINF = 0.844, Camber = 0/2, ALPT = 8.20, BETA = 0.31, QINF = 297.1, RNPU = 2.4E+06, CNWP = 0.5278

η = 0.93		0.76		0.59		0.40	
			Upper Surface				
x/c	CP	x/c	CP	x/c	CP	x/c	CP
0.020	-0.902	0.000	0.771	0.000	-5.743**	0.010	-1.202**
0.060	-0.984	0.020	-1.127**	0.020	-1.003**	0.020	-1.183**
0.110	-0.924	0.040	-0.919	0.060	-1.648**	0.060	-1.210
0.200	-0.790	0.060	-0.982	0.090	-1.063	0.110	-1.133
0.230	-0.660	0.090	-0.999	0.110	-1.111	0.140	1.898**
0.400	-0.710	0.130	-1.011	0.130	-1.066	0.190	-5.610**
0.490	-0.161	0.150	-0.993	0.150	-0.988	0.250	-1.160
0.590	-0.187	0.200	-0.917	0.210	-1.057	0.400	-0.857
0.630	-0.231	0.250	-1.015	0.250	-1.034	0.490	-0.771
0.700	-0.208	0.260	-0.947	0.340	-1.100	0.580	-0.662
0.750	-0.234	0.280	-1.023	0.370	-1.086	0.650	-0.514
0.810	-0.280	0.290	-1.019	0.400	-1.081	0.700	-0.443
0.840	-0.240	0.310	-0.958	0.410	-1.038	0.750	-0.254
0.900	-0.162	0.320	-0.949	0.430	-1.096	0.800	-0.175
0.960	-0.059	0.340	-1.012	0.440	-1.057	0.830	-0.136
		0.350	-0.413**	0.460	-1.066	0.900	-0.016
		0.370	-0.968	0.490	-0.989	0.960	0.033
		0.380	-0.971	0.500	-1.068		
		0.400	-0.888	0.520	-1.060		
		0.410	-0.997	0.540	-1.070		
		0.430	-0.988	0.550	-1.040		
		0.440	-0.920	0.580	-0.621		
		0.460	-1.037	0.600	-0.503		
		0.470	-0.997	0.610	-0.366		
		0.490	-0.966	0.650	-2.859**		
		0.500	-0.959	0.700	-0.253		
		0.520	-0.960	0.750	-0.234		
		0.530	-0.576	0.820	-0.110		
		0.550	-0.434	0.890	-0.005		
		0.560	-0.371	0.900	0.002		
		0.580	-0.314	0.960	0.063		
		0.590	-0.294				
		0.600	-0.275				
		0.640	-2.696**				
		0.700	-0.107				
		0.750	-0.132				
		0.820	-2.872**				
		0.870	-0.126				
		0.930	-0.026				
		0.960	0.030				
			Lower Surface				
0.020	0.110	0.020	0.305	0.020	0.361	0.020	0.668
0.110	-0.086	0.060	0.242	0.060	0.308	0.060	3.164**
0.230	-0.005	0.090	0.146	0.090	0.205	0.110	0.133
0.400	-0.062	0.120	0.061	0.120	-0.132	0.250	-0.038
0.490	-0.084	0.200	0.047	0.200	0.033	0.400	-0.083
0.630	3.207**	0.260	-0.073	0.250	-0.025	0.490	-0.168
0.750	0.025	0.400	-2.889**	0.400	-0.067	0.580	-0.211
0.850	0.096	0.490	-0.092	0.490	0.037	0.650	-0.058
0.900	0.147	0.580	-0.052	0.580	-0.143	0.750	0.192
0.960	0.129	0.640	0.282	0.650	0.038	0.830	0.326
		0.750	0.164	0.750	0.289	0.900	0.391
		0.870	0.244	0.890	********	0.960	0.297
		0.930	0.233	0.930	0.293		
		0.960	0.166	0.960	-2.888**		
CN =	0.421		0.645		0.724		0.683

Table F-2. Continued.

Flight 198, Wing sweep = 26°, Time = 13-44-48-000, MINF = 0.839, Camber = 0/2, ALPT = 8.62, BETA = 0.26, QINF = 294.4, RNPU = 2.3E+06, CNWP = 0.5279

η = 0.93		0.76		0.59		0.40	
			Upper Surface				
x/c	CP	*x/c*	CP	*x/c*	CP	*x/c*	CP
0.020	-0.972	0.000	0.735	0.000	-5.800**	0.010	-1.201**
0.060	-1.037	0.020	-1.200**	0.020	-1.055**	0.020	-1.247**
0.110	-0.980	0.040	-0.970	0.060	-1.626**	0.060	-1.295
0.200	-0.838	0.060	-1.058	0.090	-1.115	0.110	-1.212
0.230	-0.712	0.090	-1.050	0.110	-1.173	0.140	1.921**
0.400	-0.728	0.130	-1.070	0.130	-1.114	0.190	-5.664**
0.490	-0.152	0.150	-1.044	0.150	-1.036	0.250	-1.218
0.590	-0.193	0.200	-0.965	0.210	-1.108	0.400	-0.881
0.630	-0.233	0.250	-1.066	0.250	-1.092	0.490	-0.791
0.700	-0.214	0.260	-0.993	0.340	-1.146	0.580	-0.668
0.750	-0.240	0.280	-1.058	0.370	-1.133	0.650	-0.381
0.810	-0.294	0.290	-1.072	0.400	-1.110	0.700	-0.328
0.840	-0.261	0.310	-1.004	0.410	-1.084	0.750	-0.245
0.900	-0.177	0.320	-0.999	0.430	-1.141	0.800	-0.180
0.960	-0.077	0.340	-1.056	0.440	-1.109	0.830	-0.126
		0.350	-0.416**	0.460	-1.117	0.900	-0.023
		0.370	-1.017	0.490	-1.039	0.960	0.028
		0.380	-1.033	0.500	-1.126		
		0.400	-0.951	0.520	-1.111		
		0.410	-1.035	0.540	-0.856		
		0.430	-1.034	0.550	-0.597		
		0.440	-0.963	0.580	-0.490		
		0.460	-1.085	0.600	-0.472		
		0.470	-1.061	0.610	-0.358		
		0.490	-1.003	0.650	-2.889**		
		0.500	-0.924	0.700	-0.295		
		0.520	-0.608	0.750	-0.269		
		0.530	-0.439	0.820	-0.109		
		0.550	-0.399	0.890	-0.002		
		0.560	-0.363	0.900	0.008		
		0.580	-0.319	0.960	0.063		
		0.590	-0.303				
		0.600	-0.296				
		0.640	-2.725**				
		0.700	-0.112				
		0.750	-0.130				
		0.820	-2.902**				
		0.870	-0.134				
		0.930	-0.026				
		0.960	0.022				
			Lower Surface				
0.020	0.123	0.020	0.348	0.020	0.407	0.020	0.721
0.110	-0.062	0.060	0.263	0.060	0.363	0.060	3.189**
0.230	-0.001	0.090	0.176	0.090	0.235	0.110	0.167
0.400	-0.055	0.120	0.088	0.120	-0.105	0.250	-0.013
0.490	-0.066	0.200	0.074	0.200	0.052	0.400	-0.058
0.630	3.233**	0.260	-0.047	0.250	0.001	0.490	-0.143
0.750	0.025	0.400	-2.919**	0.400	-0.046	0.580	-0.186
0.850	0.101	0.490	-0.074	0.490	0.041	0.650	-0.047
0.900	0.148	0.580	-0.034	0.580	-0.125	0.750	0.201
0.960	0.125	0.640	0.296	0.650	0.046	0.830	0.332
		0.750	0.176	0.750	0.288	0.900	0.391
		0.870	0.248	0.890	********	0.960	0.277
		0.930	0.250	0.930	0.292		
		0.960	0.168	0.960	-2.918**		
CN =	0.451		0.679		0.754		0.710

Table F-2. Continued.

Flight 198, Wing sweep = 26°, Time = 13-44-56-000, MINF = 0.846, Camber = 0/2, ALPT = 9.00, BETA = 0.10, QINF = 299.8, RNPU = 2.4E+06, CNWP = 0.5776

η = 0.93		0.76		0.59		0.40	
			Upper Surface				
x/c	CP	x/c	CP	x/c	CP	x/c	CP
0.020	-0.981	0.000	0.760	0.000	-5.698**	0.010	-1.225**
0.060	-1.068	0.020	-1.200**	0.020	-1.055**	0.020	-1.259**
0.110	-0.988	0.040	-0.995	0.060	-1.594**	0.060	-1.275
0.200	-0.866	0.060	-1.073	0.090	-1.114	0.110	-1.213
0.230	-0.740	0.090	-1.060	0.110	-1.182	0.140	1.883**
0.400	-0.787	0.130	-1.077	0.130	-1.133	0.190	-5.566**
0.490	-0.357	0.150	-1.053	0.150	-1.054	0.250	-1.228
0.590	-0.177	0.200	-0.973	0.210	-1.110	0.400	-0.882
0.630	-0.217	0.250	-1.076	0.250	-1.097	0.490	-0.789
0.700	-0.206	0.260	-1.005	0.340	-1.159	0.580	-0.722
0.750	-0.247	0.280	-1.069	0.370	-1.139	0.650	-0.556
0.810	-0.285	0.290	-1.074	0.400	-1.107	0.700	-0.548
0.840	-0.260	0.310	-1.011	0.410	-1.107	0.750	-0.303
0.900	-0.182	0.320	-1.011	0.430	-1.163	0.800	-0.194
0.960	-0.086	0.340	-1.065	0.440	-1.124	0.830	-0.136
		0.350	-0.417**	0.460	-1.129	0.900	-0.045
		0.370	-1.024	0.490	-1.046	0.960	0.008
		0.380	-1.040	0.500	-1.137		
		0.400	-0.948	0.520	-1.129		
		0.410	-1.051	0.540	-1.136		
		0.430	-1.042	0.550	-1.060		
		0.440	-0.957	0.580	-0.590		
		0.460	-1.104	0.600	-0.528		
		0.470	-1.065	0.610	-0.439		
		0.490	-1.012	0.650	-2.840**		
		0.500	-0.954	0.700	-0.393		
		0.520	-0.768	0.750	-0.389		
		0.530	-0.569	0.820	-0.186		
		0.550	-0.493	0.890	-0.022		
		0.560	-0.453	0.900	-0.022		
		0.580	-0.415	0.960	0.029		
		0.590	-0.424				
		0.600	-0.411				
		0.640	-2.679**				
		0.700	-0.245				
		0.750	-0.112				
		0.820	-2.853**				
		0.870	-0.092				
		0.930	-0.010				
		0.960	0.026				
			Lower Surface				
0.020	0.146	0.020	0.363	0.020	0.428	0.020	0.740
0.110	-0.050	0.060	0.289	0.060	0.380	0.060	3.128**
0.230	-0.008	0.090	0.188	0.090	0.252	0.110	0.181
0.400	-0.057	0.120	0.105	0.120	-0.089	0.250	-0.003
0.490	-0.083	0.200	0.084	0.200	0.048	0.400	-0.052
0.630	3.172**	0.260	-0.035	0.250	0.013	0.490	-0.137
0.750	0.017	0.400	-2.870**	0.400	-0.038	0.580	-0.191
0.850	0.092	0.490	-0.079	0.490	0.041	0.650	-0.050
0.900	0.142	0.580	-0.044	0.580	-0.126	0.750	0.199
0.960	0.119	0.640	0.287	0.650	0.042	0.830	0.327
		0.750	0.170	0.750	0.283	0.900	0.389
		0.870	0.236	0.890	********	0.960	0.290
		0.930	0.224	0.930	0.279		
		0.960	0.147	0.960	-2.869**		
CN =	0.477		0.703		0.803		0.748

Table F-2. Continued.

Flight 198, Wing sweep = 26°, Time = 13-45-6-000, MINF = 0.847, Camber = 0/2, ALPT = 10.00, BETA = 0.07, QINF = 301.5, RNPU = 2.4E+06, CNWP = 0.4444

η = 0.93		0.76		0.59		0.40	
			Upper Surface				
x/c	CP	*x/c*	CP	*x/c*	CP	*x/c*	CP
0.020	-1.069	0.000	0.686	0.000	-5.674**	0.010	-1.316**
0.060	-1.119	0.020	-1.219**	0.020	-1.157**	0.020	-1.319**
0.110	-1.094	0.040	-1.100	0.060	-1.674**	0.060	-1.391
0.200	-0.959	0.060	-1.137	0.090	-1.200	0.110	-1.298
0.230	-0.855	0.090	-1.140	0.110	-1.245	0.140	1.846**
0.400	-0.715	0.130	-1.149	0.130	-1.207	0.190	-5.542**
0.490	-0.141	0.150	-1.123	0.150	-1.131	0.250	-1.287
0.590	-0.177	0.200	-1.048	0.210	-1.196	0.400	-0.939
0.630	-0.247	0.250	-1.168	0.250	-1.091	0.490	-0.647
0.700	-0.242	0.260	-1.089	0.340	-0.685	0.580	-0.548
0.750	-0.265	0.280	-1.137	0.370	-0.663	0.650	-0.453
0.810	-0.321	0.290	-1.148	0.400	-0.638	0.700	-0.447
0.840	-0.296	0.310	-1.061	0.410	-0.603	0.750	-0.389
0.900	-0.198	0.320	-1.061	0.430	-0.636	0.800	-0.322
0.960	-0.108	0.340	-0.983	0.440	-0.608	0.830	-0.337
		0.350	-0.391**	0.460	-0.597	0.900	-0.235
		0.370	-0.828	0.490	-0.551	0.960	-0.140
		0.380	-0.771	0.500	-0.584		
		0.400	-0.659	0.520	-0.581		
		0.410	-0.678	0.540	-0.570		
		0.430	-0.632	0.550	-0.545		
		0.440	-0.562	0.580	-0.525		
		0.460	-0.604	0.600	-0.533		
		0.470	-0.537	0.610	-0.444		
		0.490	-0.508	0.650	-2.832**		
		0.500	-0.461	0.700	-0.477		
		0.520	-0.484	0.750	-0.484		
		0.530	-0.422	0.820	-0.416		
		0.550	-0.445	0.890	-0.342		
		0.560	-0.390	0.900	-0.319		
		0.580	-0.388	0.960	-0.290		
		0.590	-0.353				
		0.600	-0.368				
		0.640	-2.672**				
		0.700	-0.273				
		0.750	-0.191				
		0.820	-2.845**				
		0.870	-0.214				
		0.930	-0.142				
		0.960	-0.124				
			Lower Surface				
0.020	0.196	0.020	0.423	0.020	0.480	0.020	0.800
0.110	-0.025	0.060	0.331	0.060	0.437	0.060	3.103**
0.230	-0.005	0.090	0.232	0.090	0.295	0.110	0.263
0.400	-0.091	0.120	0.119	0.120	-0.045	0.250	0.043
0.490	-0.105	0.200	0.118	0.200	0.093	0.400	-0.031
0.630	3.146**	0.260	-0.021	0.250	0.034	0.490	-0.129
0.750	-0.009	0.400	-2.862**	0.400	-0.036	0.580	-0.198
0.850	0.061	0.490	-0.094	0.490	0.014	0.650	-0.072
0.900	0.128	0.580	-0.077	0.580	-0.148	0.750	0.180
0.960	0.098	0.640	0.242	0.650	0.009	0.830	0.296
		0.750	0.120	0.750	0.233	0.900	0.355
		0.870	0.176	0.890	********	0.960	0.253
		0.930	0.132	0.930	0.183		
		0.960	0.039	0.960	-2.861**		
CN =	0.473		0.667		0.730		0.791

Table F-2. Continued.

Flight 221, Wing sweep = 26°, Time = 13-17-25-000, MINF = 0.852, Camber = 0/2, ALPT = 5.08, BETA = -0.07, QINF = 297.1, RNPU = 2.3E+06, CNWP = 0.2299

η = 0.93		0.76		0.59		0.40	
			Upper Surface				
x/c	CP	*x/c*	CP	*x/c*	CP	*x/c*	CP
0.020	-0.358	0.000	0.853	0.000	1.000**	0.010	-0.829
0.060	-0.439	0.020	-0.566	0.020	-0.550	0.020	-0.893
0.110	-0.387	0.040	-0.524	0.060	-2.938**	0.060	-0.867
0.200	-0.226	0.060	-0.603	0.090	-0.718	0.110	-0.823
0.230	-0.352	0.090	-0.622	0.110	-0.712	0.140	-0.864
0.400	-0.247	0.130	-0.626	0.130	-0.663	0.190	-1.968**
0.490	-0.181	0.150	-0.613	0.150	-0.673	0.250	-0.813
0.590	-0.283	0.200	-0.529	0.210	-0.663	0.400	-0.288
0.630	-0.290	0.250	-0.634	0.250	-0.681	0.490	-0.291
0.700	-0.198	0.260	-0.619	0.340	-0.558	0.580	-0.309
0.750	-0.256	0.280	-0.618	0.370	-0.251	0.650	-0.371
0.810	-0.269	0.290	-0.442	0.400	-0.223	0.700	-0.344
0.840	-0.225	0.310	-0.246	0.410	-2.973**	0.750	-0.418
0.900	-0.110	0.320	-0.232	0.430	-0.248	0.800	-0.440
0.960	-0.024	0.340	-0.201	0.440	-0.236	0.830	-0.406
		0.350	-0.179**	0.460	-0.261	0.900	-0.153
		0.370	-0.196	0.490	-0.218	0.960	0.004
		0.380	-0.263	0.500	-0.290		
		0.400	-0.176	0.520	-0.275		
		0.410	-0.277	0.540	-0.267		
		0.430	-0.261	0.550	-0.277		
		0.440	-0.238	0.580	-0.290		
		0.460	-0.277	0.600	-0.271		
		0.470	-0.262	0.610	-0.296		
		0.490	-0.274	0.650	0.479**		
		0.500	-0.285	0.700	-0.544		
		0.520	-0.328	0.750	-0.559		
		0.530	-0.289	0.820	-0.326		
		0.550	-0.338	0.890	-0.092		
		0.560	-0.300	0.900	-0.070		
		0.580	-0.293	0.960	0.059		
		0.590	-0.338				
		0.600	-0.339				
		0.640	-0.494				
		0.700	-0.451				
		0.750	-0.034**				
		0.820	-0.253				
		0.870	-0.218				
		0.930	-0.080				
		0.960	-0.022				
			Lower Surface				
0.020	-0.308	0.020	-0.111	0.020	0.032	0.020	0.345
0.110	-0.266	0.060	-0.060	0.060	0.032	0.060	1.090**
0.230	-0.084	0.090	-0.113	0.090	1.200**	0.110	-0.118
0.400	-0.071	0.120	-0.180	0.120	-0.283	0.250	-0.271
0.490	-0.081	0.200	-0.158	0.200	-0.220	0.400	-0.284
0.630	1.966**	0.260	-0.251	0.250	-0.255	0.490	-0.349
0.750	0.023	0.400	-0.174	0.400	-0.220	0.580	-0.330
0.850	0.122	0.490	-0.178	0.490	-0.065	0.650	-0.141
0.900	0.211	0.580	-0.149	0.580	-0.227	0.750	0.097
0.960	0.171	0.640	0.042	0.650	-0.050	0.830	0.268
		0.750	0.175	0.750	-0.043	0.900	0.310
		0.870	0.224	0.890	0.277	0.960	0.258
		0.930	0.209	0.930	0.241		
		0.960	0.184	0.960	-2.019**		
CN =	0.205		0.322		0.313		0.363

Table F-2. Continued.

Flight 221, Wing sweep = 26°, Time = 13-17-38-500, MINF = 0.846, Camber = 0/2, ALPT = 6.04, BETA = -0.18, QINF = 291.6, RNPU = 2.3E+06, CNWP = 0.2906

η = 0.93		0.76		0.59		0.40	
			Upper Surface				
x/c	CP	*x/c*	CP	*x/c*	CP	*x/c*	CP
0.020	-0.720	0.000	0.809	0.000	0.972**	0.010	-0.999
0.060	-0.693	0.020	-0.834	0.020	-0.826	0.020	-0.999
0.110	-0.659	0.040	-0.728	0.060	-3.038**	0.060	-1.016
0.200	-0.382	0.060	-0.794	0.090	-0.886	0.110	-0.923
0.230	-0.495	0.090	-0.773	0.110	-0.868	0.140	-0.976
0.400	-0.233	0.130	-0.803	0.130	-0.801	0.190	-1.994**
0.490	-0.215	0.150	-0.799	0.150	-0.819	0.250	-0.977
0.590	-0.288	0.200	-0.685	0.210	-0.784	0.400	-0.735
0.630	-0.280	0.250	-0.793	0.250	-0.847	0.490	-0.334
0.700	-0.213	0.260	-0.781	0.340	-0.851	0.580	-0.308
0.750	-0.284	0.280	-0.777	0.370	-0.840	0.650	-0.329
0.810	-0.293	0.290	-0.786	0.400	-0.853	0.700	-0.333
0.840	-0.249	0.310	-0.775	0.410	-3.018**	0.750	-0.377
0.900	-0.147	0.320	-0.772	0.430	-0.736	0.800	-0.345
0.960	-0.058	0.340	-0.754	0.440	-0.424	0.830	-0.287
		0.350	-0.415**	0.460	-0.327	0.900	-0.136
		0.370	-0.753	0.490	-0.180	0.960	0.005
		0.380	-0.786	0.500	-0.217		
		0.400	-0.374	0.520	-0.206		
		0.410	-0.282	0.540	-0.178		
		0.430	-0.199	0.550	-0.198		
		0.440	-0.147	0.580	-0.209		
		0.460	-0.164	0.600	-0.199		
		0.470	-0.138	0.610	-0.250		
		0.490	-0.129	0.650	0.644**		
		0.500	-0.198	0.700	-0.362		
		0.520	-0.163	0.750	-0.383		
		0.530	-0.185	0.820	-0.341		
		0.550	-0.221	0.890	-0.106		
		0.560	-0.226	0.900	-0.070		
		0.580	-0.227	0.960	0.049		
		0.590	-0.270				
		0.600	-0.283				
		0.640	-0.349				
		0.700	-0.339				
		0.750	-0.039**				
		0.820	-0.281				
		0.870	-0.237				
		0.930	-0.097				
		0.960	-0.030				
			Lower Surface				
0.020	-0.136	0.020	0.024	0.020	0.125	0.020	0.446
0.110	-0.214	0.060	0.028	0.060	0.117	0.060	1.107**
0.230	-0.070	0.090	-0.038	0.090	1.234**	0.110	-0.020
0.400	-0.091	0.120	-0.120	0.120	-0.217	0.250	-0.206
0.490	-0.078	0.200	-0.105	0.200	-0.138	0.400	-0.226
0.630	2.015**	0.260	-0.193	0.250	-0.181	0.490	-0.290
0.750	0.027	0.400	-0.142	0.400	-0.177	0.580	-0.279
0.850	0.104	0.490	-0.158	0.490	-0.055	0.650	-0.132
0.900	0.180	0.580	-0.125	0.580	-0.205	0.750	0.100
0.960	0.149	0.640	0.043	0.650	-0.055	0.830	0.293
		0.750	0.175	0.750	-0.032	0.900	0.312
		0.870	0.234	0.890	0.279	0.960	0.268
		0.930	0.202	0.930	0.234		
		0.960	0.168	0.960	-2.065**		
CN =	0.277		0.424		0.420		0.495

Table F-2. Continued.

Flight 221, Wing sweep = 26°, Time = 13-17-42-500, MINF = 0.853, Camber = 0/2, ALPT = 7.07, BETA = -0.27, QINF = 294.5, RNPU = 2.3E+06, CNWP = 0.3584

η = 0.93		0.76		0.59		0.40	
			Upper Surface				
x/c	CP	*x/c*	CP	*x/c*	CP	*x/c*	CP
0.020	-0.794	0.000	0.789	0.000	0.942**	0.010	-1.017
0.060	-0.783	0.020	-0.932	0.020	-0.890	0.020	-1.087
0.110	-0.772	0.040	-0.775	0.060	-3.046**	0.060	-1.040
0.200	-0.632	0.060	-0.887	0.090	-0.942	0.110	-1.005
0.230	-0.557	0.090	-0.886	0.110	-0.933	0.140	-1.048
0.400	-0.466	0.130	-0.886	0.130	-0.896	0.190	-1.965**
0.490	-0.167	0.150	-0.896	0.150	-0.913	0.250	-1.073
0.590	-0.226	0.200	-0.812	0.210	-0.853	0.400	-0.783
0.630	-0.233	0.250	-0.854	0.250	-0.911	0.490	-0.711
0.700	-0.202	0.260	-0.848	0.340	-0.926	0.580	-0.615
0.750	-0.285	0.280	-0.849	0.370	-0.911	0.650	-0.545
0.810	-0.304	0.290	-0.849	0.400	-0.949	0.700	-0.447
0.840	-0.268	0.310	-0.872	0.410	-2.979**	0.750	-0.290
0.900	-0.168	0.320	-0.861	0.430	-0.918	0.800	-0.305
0.960	-0.074	0.340	-0.839	0.440	-0.894	0.830	-0.201
		0.350	-0.435**	0.460	-0.912	0.900	-0.067
		0.370	-0.845	0.490	-0.883	0.960	0.021
		0.380	-0.900	0.500	-0.928		
		0.400	-0.809	0.520	-0.907		
		0.410	-0.871	0.540	-0.901		
		0.430	-0.847	0.550	-0.924		
		0.440	-0.831	0.580	-0.608		
		0.460	-0.868	0.600	-0.403		
		0.470	-0.833	0.610	-0.321		
		0.490	-0.855	0.650	0.825**		
		0.500	-0.865	0.700	-0.170		
		0.520	-0.824	0.750	-0.255		
		0.530	-0.475	0.820	-0.204		
		0.550	-0.364	0.890	-0.059		
		0.560	-0.253	0.900	-0.049		
		0.580	-0.209	0.960	0.071		
		0.590	-0.196				
		0.600	-0.177				
		0.640	-0.141				
		0.700	-0.177				
		0.750	-0.019**				
		0.820	-0.239				
		0.870	-0.203				
		0.930	-0.091				
		0.960	-0.021				
			Lower Surface				
0.020	-0.076	0.020	0.136	0.020	0.212	0.020	0.560
0.110	-0.176	0.060	0.106	0.060	0.171	0.060	1.104**
0.230	-0.061	0.090	0.025	0.090	1.230**	0.110	0.010
0.400	-0.063	0.120	-0.036	0.120	-0.154	0.250	-0.141
0.490	-0.069	0.200	-0.054	0.200	-0.060	0.400	-0.193
0.630	2.004**	0.260	-0.145	0.250	-0.126	0.490	-0.256
0.750	0.013	0.400	-0.113	0.400	-0.136	0.580	-0.262
0.850	0.100	0.490	-0.136	0.490	-0.039	0.650	-0.122
0.900	0.161	0.580	-0.122	0.580	-0.180	0.750	0.118
0.960	0.147	0.640	0.055	0.650	-0.047	0.830	0.292
		0.750	0.182	0.750	-0.023	0.900	0.308
		0.870	0.231	0.890	0.292	0.960	0.256
		0.930	0.216	0.930	0.248		
		0.960	0.175	0.960	-2.089**		
CN =	0.339		0.545		0.544		0.609

Table F-2. Continued.

Flight 221, Wing sweep = 26°, Time = 13-17-49-500, MINF = 0.858, Camber = 0/2, ALPT = 7.94, BETA = -0.18, QINF = 296.8, RNPU = 2.3E+06, CNWP = 0.4297

η = 0.93		0.76		0.59		0.40	
			Upper Surface				
x/c	CP	*x/c*	CP	*x/c*	CP	*x/c*	CP
0.020	-0.857	0.000	0.743	0.000	0.873**	0.010	-1.126
0.060	-0.934	0.020	-1.007	0.020	-0.945	0.020	-1.168
0.110	-0.853	0.040	-0.887	0.060	-3.114**	0.060	-1.101
0.200	-0.722	0.060	-0.964	0.090	-1.014	0.110	-1.121
0.230	-0.689	0.090	-0.954	0.110	-1.004	0.140	-1.117
0.400	-0.726	0.130	-0.950	0.130	-0.951	0.190	-1.940**
0.490	-0.649	0.150	-0.953	0.150	-0.988	0.250	-1.164
0.590	-0.210	0.200	-0.891	0.210	-0.927	0.400	-0.846
0.630	-0.210	0.250	-0.930	0.250	-0.975	0.490	-0.758
0.700	-0.149	0.260	-0.908	0.340	-1.015	0.580	-0.690
0.750	-0.280	0.280	-0.919	0.370	-0.989	0.650	-0.659
0.810	-0.284	0.290	-0.919	0.400	-1.014	0.700	-0.637
0.840	-0.271	0.310	-0.945	0.410	-2.946**	0.750	-0.588
0.900	-0.200	0.320	-0.936	0.430	-0.993	0.800	-0.244
0.960	-0.104	0.340	-0.910	0.440	-0.966	0.830	-0.159
		0.350	-0.453**	0.460	-0.983	0.900	-0.063
		0.370	-0.910	0.490	-0.958	0.960	-0.025
		0.380	-0.963	0.500	-1.003		
		0.400	-0.874	0.520	-0.973		
		0.410	-0.935	0.540	-0.982		
		0.430	-0.916	0.550	-1.009		
		0.440	-0.907	0.580	-0.998		
		0.460	-0.938	0.600	-0.934		
		0.470	-0.911	0.610	-0.922		
		0.490	-0.938	0.650	0.568**		
		0.500	-0.951	0.700	-0.386		
		0.520	-0.933	0.750	-0.426		
		0.530	-0.931	0.820	-0.153		
		0.550	-0.981	0.890	-0.015		
		0.560	-0.920	0.900	-0.011		
		0.580	-0.941	0.960	0.080		
		0.590	-0.984				
		0.600	-0.732				
		0.640	-0.280				
		0.700	-0.241				
		0.750	-0.017**				
		0.820	-0.125				
		0.870	-0.130				
		0.930	-0.040				
		0.960	0.011				
			Lower Surface				
0.020	-0.010	0.020	0.214	0.020	0.283	0.020	0.601
0.110	-0.146	0.060	0.164	0.060	0.231	0.060	1.090**
0.230	-0.054	0.090	0.072	0.090	1.230**	0.110	0.066
0.400	-0.071	0.120	0.003	0.120	-0.107	0.250	-0.099
0.490	-0.081	0.200	-0.026	0.200	-0.020	0.400	-0.153
0.630	1.998**	0.260	-0.121	0.250	-0.086	0.490	-0.229
0.750	-0.001	0.400	-0.102	0.400	-0.121	0.580	-0.265
0.850	0.082	0.490	-0.133	0.490	-0.040	0.650	-0.119
0.900	0.169	0.580	-0.127	0.580	-0.177	0.750	0.111
0.960	0.128	0.640	0.053	0.650	-0.037	0.830	0.284
		0.750	0.175	0.750	-0.044	0.900	0.315
		0.870	0.223	0.890	0.284	0.960	0.239
		0.930	0.208	0.930	0.241		
		0.960	0.169	0.960	-2.050**		
CN =	0.448		0.645		0.666		0.702

Table F-2. Continued.

Flight 221, Wing sweep = 26°, Time = 13-17-51-500, MINF = 0.861, Camber = 0/2, ALPT = 8.68, BETA = -0.15, QINF = 298.8, RNPU = 2.3E+06, CNWP = 0.4668

η = 0.93		0.76		0.59		0.40	
			Upper Surface				
x/c	CP	*x/c*	CP	*x/c*	CP	*x/c*	CP
0.020	-0.901	0.000	0.707	0.000	0.837**	0.010	-1.142
0.060	-0.939	0.020	-1.059	0.020	-0.997	0.020	-1.204
0.110	-0.930	0.040	-0.934	0.060	-3.119**	0.060	-1.221
0.200	-0.769	0.060	-0.960	0.090	-1.051	0.110	-1.155
0.230	-0.723	0.090	-0.993	0.110	-1.044	0.140	-1.165
0.400	-0.776	0.130	-0.977	0.130	-0.982	0.190	-1.929**
0.490	-0.683	0.150	-0.985	0.150	-1.026	0.250	-1.165
0.590	-0.222	0.200	-0.927	0.210	-0.960	0.400	-0.856
0.630	-0.195	0.250	-0.964	0.250	-1.014	0.490	-0.764
0.700	-0.146	0.260	-0.945	0.340	-1.025	0.580	-0.698
0.750	-0.276	0.280	-0.958	0.370	-1.023	0.650	-0.682
0.810	-0.299	0.290	-0.949	0.400	-1.039	0.700	-0.666
0.840	-0.279	0.310	-0.972	0.410	-2.929**	0.750	-0.571
0.900	-0.203	0.320	-0.980	0.430	-1.033	0.800	-0.272
0.960	-0.105	0.340	-0.947	0.440	-1.003	0.830	-0.187
		0.350	-0.457**	0.460	-1.020	0.900	-0.101
		0.370	-0.950	0.490	-0.976	0.960	-0.051
		0.380	-0.995	0.500	-1.036		
		0.400	-0.892	0.520	-1.020		
		0.410	-0.963	0.540	-1.005		
		0.430	-0.947	0.550	-1.041		
		0.440	-0.939	0.580	-1.046		
		0.460	-0.970	0.600	-0.978		
		0.470	-0.926	0.610	-0.945		
		0.490	-0.977	0.650	0.596**		
		0.500	-0.991	0.700	-0.433		
		0.520	-0.990	0.750	-0.462		
		0.530	-0.962	0.820	-0.238		
		0.550	-0.876	0.890	-0.069		
		0.560	-0.592	0.900	-0.082		
		0.580	-0.501	0.960	0.000		
		0.590	-0.481				
		0.600	-0.443				
		0.640	-0.337				
		0.700	-0.322				
		0.750	-0.022**				
		0.820	-0.133				
		0.870	-0.116				
		0.930	-0.082				
		0.960	-0.054				
			Lower Surface				
0.020	0.039	0.020	0.264	0.020	0.372	0.020	0.659
0.110	-0.121	0.060	0.195	0.060	0.267	0.060	1.082**
0.230	-0.044	0.090	0.099	0.090	1.221**	0.110	0.134
0.400	-0.076	0.120	0.027	0.120	-0.073	0.250	-0.067
0.490	-0.053	0.200	-0.006	0.200	-0.002	0.400	-0.124
0.630	1.983**	0.260	-0.100	0.250	-0.058	0.490	-0.215
0.750	-0.010	0.400	-0.095	0.400	-0.102	0.580	-0.255
0.850	0.076	0.490	-0.130	0.490	-0.045	0.650	-0.120
0.900	0.147	0.580	-0.117	0.580	-0.177	0.750	0.109
0.960	0.126	0.640	0.044	0.650	-0.038	0.830	0.289
		0.750	0.164	0.750	-0.045	0.900	0.311
		0.870	0.211	0.890	0.281	0.960	0.230
		0.930	0.176	0.930	0.223		
		0.960	0.133	0.960	-2.070**		
CN =	0.476		0.656		0.715		0.744

Table F-2. Continued.

Flight 221, Wing sweep = 26°, Time = 13-17-58-500, MINF = 0.861, Camber = 0/2, ALPT = 11.05, BETA = -0.33, QINF = 306.5, RNPU = 2.4E+06, CNWP = 0.2951

η = 0.93		0.76		0.59		0.40	
			Upper Surface				
x/c	CP	*x/c*	CP	*x/c*	CP	*x/c*	CP
0.020	-1.170	0.000	0.503	0.000	0.662**	0.010	-1.368
0.060	-1.176	0.020	-1.388	0.020	-1.240	0.020	-1.361
0.110	-1.125	0.040	-1.203	0.060	-3.243**	0.060	-1.419
0.200	-1.051	0.060	-1.227	0.090	-1.263	0.110	-1.360
0.230	-0.980	0.090	-1.216	0.110	-1.248	0.140	-1.410
0.400	-0.635	0.130	-1.149	0.130	-1.192	0.190	-1.928**
0.490	-0.383	0.150	-0.976	0.150	-1.209	0.250	-1.320
0.590	-0.291	0.200	-0.896	0.210	-1.057	0.400	-0.824
0.630	-0.265	0.250	-0.868	0.250	-0.907	0.490	-0.758
0.700	-0.231	0.260	-0.785	0.340	-0.731	0.580	-0.704
0.750	-0.303	0.280	-0.784	0.370	-0.694	0.650	-0.624
0.810	-0.365	0.290	-0.733	0.400	-0.698	0.700	-0.612
0.840	-0.349	0.310	-0.767	0.410	-2.902**	0.750	-0.568
0.900	-0.289	0.320	-0.764	0.430	-0.673	0.800	-0.460
0.960	-0.189	0.340	-0.640	0.440	-0.648	0.830	-0.479
		0.350	-0.335**	0.460	-0.665	0.900	-0.375
		0.370	-0.636	0.490	-0.616	0.960	-0.299
		0.380	-0.660	0.500	-0.672		
		0.400	-0.562	0.520	-0.643		
		0.410	-0.583	0.540	-0.596		
		0.430	-0.621	0.550	-0.608		
		0.440	-0.523	0.580	-0.664		
		0.460	-0.623	0.600	-0.592		
		0.470	-0.520	0.610	-0.556		
		0.490	-0.543	0.650	0.422**		
		0.500	-0.548	0.700	-0.605		
		0.520	-0.567	0.750	-0.655		
		0.530	-0.492	0.820	-0.524		
		0.550	-0.565	0.890	-0.452		
		0.560	-0.460	0.900	-0.447		
		0.580	-0.512	0.960	-0.341		
		0.590	-0.489				
		0.600	-0.474				
		0.640	-0.377				
		0.700	-0.382				
		0.750	-0.053**				
		0.820	-0.351				
		0.870	-0.313				
		0.930	-0.351				
		0.960	-0.336				
			Lower Surface				
0.020	0.215	0.020	0.503	0.020	0.557	0.020	0.775
0.110	-0.021	0.060	0.344	0.060	0.412	0.060	1.065**
0.230	0.001	0.090	0.227	0.090	1.142**	0.110	0.271
0.400	-0.071	0.120	0.169	0.120	0.067	0.250	0.053
0.490	-0.106	0.200	0.101	0.200	0.110	0.400	-0.039
0.630	1.886**	0.260	-0.013	0.250	0.040	0.490	-0.140
0.750	-0.077	0.400	-0.045	0.400	-0.045	0.580	-0.209
0.850	-0.016	0.490	-0.108	0.490	-0.069	0.650	-0.128
0.900	0.066	0.580	-0.143	0.580	-0.176	0.750	0.093
0.960	0.025	0.640	0.017	0.650	-0.069	0.830	0.254
		0.750	0.100	0.750	-0.077	0.900	0.271
		0.870	0.139	0.890	0.192	0.960	0.152
		0.930	0.090	0.930	0.119		
		0.960	0.004	0.960	-2.093**		
CN =	0.513		0.662		0.726		0.892

Table F-2. Continued.

Flight 221, Wing sweep = 26°, Time = 13-18-1-500, MINF = 0.854, Camber = 0/2, ALPT = 12.24, BETA = 0.60, QINF = 307.6, RNPU = 2.4E+06, CNWP = 0.2915

η = 0.93		0.76		0.59		0.40	
			Upper Surface				
x/c	CP	*x/c*	CP	*x/c*	CP	*x/c*	CP
0.020	-1.269	0.000	0.426	0.000	0.569**	0.010	-1.439
0.060	-1.243	0.020	-1.382	0.020	-1.308	0.020	-1.458
0.110	-1.227	0.040	-1.287	0.060	-3.187**	0.060	-1.496
0.200	-1.089	0.060	-1.322	0.090	-1.253	0.110	-1.431
0.230	-1.025	0.090	-1.307	0.110	-0.995	0.140	-1.443
0.400	-0.741	0.130	-1.292	0.130	-1.061	0.190	-1.959**
0.490	-0.376	0.150	-1.235	0.150	-0.830	0.250	-1.394
0.590	-0.338	0.200	-1.153	0.210	-0.912	0.400	-0.884
0.630	-0.340	0.250	-0.810	0.250	-0.828	0.490	-0.731
0.700	-0.272	0.260	-0.883	0.340	-0.744	0.580	-0.528
0.750	-0.346	0.280	-0.759	0.370	-0.724	0.650	-0.457
0.810	-0.344	0.290	-0.725	0.400	-0.741	0.700	-0.438
0.840	-0.334	0.310	-0.734	0.410	-2.930**	0.750	-0.425
0.900	-0.278	0.320	-0.726	0.430	-0.723	0.800	-0.438
0.960	-0.224	0.340	-0.779	0.440	-0.696	0.830	-0.437
		0.350	-0.390**	0.460	-0.727	0.900	-0.368
		0.370	-0.675	0.490	-0.682	0.960	-0.300
		0.380	-0.715	0.500	-0.738		
		0.400	-0.640	0.520	-0.726		
		0.410	-0.714	0.540	-0.696		
		0.430	-0.602	0.550	-0.716		
		0.440	-0.682	0.580	-0.724		
		0.460	-0.604	0.600	-0.655		
		0.470	-0.626	0.610	-0.627		
		0.490	-0.586	0.650	0.352**		
		0.500	-0.647	0.700	-0.593		
		0.520	-0.589	0.750	-0.666		
		0.530	-0.605	0.820	-0.504		
		0.550	-0.584	0.890	-0.425		
		0.560	-0.555	0.900	-0.466		
		0.580	-0.517	0.960	-0.355		
		0.590	-0.590				
		0.600	-0.557				
		0.640	-0.513				
		0.700	-0.518				
		0.750	-0.044**				
		0.820	-0.395				
		0.870	-0.367				
		0.930	-0.359				
		0.960	-0.343				
			Lower Surface				
0.020	0.281	0.020	0.596	0.020	0.607	0.020	0.808
0.110	0.021	0.060	0.363	0.060	0.455	0.060	1.052**
0.230	0.025	0.090	0.269	0.090	1.100**	0.110	0.320
0.400	-0.054	0.120	0.185	0.120	0.112	0.250	0.084
0.490	-0.100	0.200	0.135	0.200	0.167	0.400	-0.009
0.630	1.841**	0.260	0.018	0.250	0.088	0.490	-0.098
0.750	-0.083	0.400	-0.028	0.400	-0.025	0.580	-0.178
0.850	-0.010	0.490	-0.094	0.490	-0.056	0.650	-0.093
0.900	0.069	0.580	-0.141	0.580	-0.160	0.750	0.108
0.960	0.010	0.640	0.022	0.650	-0.062	0.830	0.258
		0.750	0.121	0.750	-0.114	0.900	0.269
		0.870	0.153	0.890	0.187	0.960	0.148
		0.930	0.088	0.930	0.117		
		0.960	0.017	0.960	-2.124**		
CN =	0.566		0.757		0.733		0.902

Table F-2. Continued.

Flight 221, Wing sweep = 26°, Time = 14-6-7-500, MINF = 0.855, Camber = 0/2, ALPT = 5.48, BETA = -0.70, QINF = 300.7, RNPU = 2.4E+06, CNWP = 0.2256

η = 0.93		0.76		0.59		0.40	
			Upper Surface				
x/c	CP	*x/c*	CP	*x/c*	CP	*x/c*	CP
0.020	-0.537	0.000	0.838	0.000	0.930**	0.010	-0.807
0.060	-0.555	0.020	-0.700	0.020	-0.711	0.020	-0.953
0.110	-0.517	0.040	-0.642	0.060	-2.896**	0.060	-0.928
0.200	-0.219	0.060	-0.697	0.090	-0.780	0.110	-0.841
0.230	-0.338	0.090	-0.701	0.110	-0.793	0.140	-0.898
0.400	-0.230	0.130	-0.706	0.130	-0.699	0.190	-1.953**
0.490	-0.202	0.150	-0.699	0.150	-0.749	0.250	-0.896
0.590	-0.280	0.200	-0.599	0.210	-0.710	0.400	-0.642
0.630	-0.272	0.250	-0.711	0.250	-0.732	0.490	-0.315
0.700	-0.181	0.260	-0.661	0.340	-0.770	0.580	-0.314
0.750	-0.257	0.280	-0.698	0.370	-0.757	0.650	-0.355
0.810	-0.267	0.290	-0.698	0.400	-0.729	0.700	-0.343
0.840	-0.239	0.310	-0.698	0.410	2.551**	0.750	-0.407
0.900	-0.117	0.320	-0.689	0.430	-0.284	0.800	-0.402
0.960	-0.043	0.340	-0.662	0.440	-0.200	0.830	-0.328
		0.350	-0.407**	0.460	-0.217	0.900	-0.151
		0.370	-0.312	0.490	-0.111	0.960	0.000
		0.380	-0.236	0.500	-0.221		
		0.400	-0.094	0.520	-0.179		
		0.410	-0.182	0.540	-0.205		
		0.430	-0.163	0.550	-0.206		
		0.440	-0.110	0.580	-0.243		
		0.460	-0.196	0.600	-0.210		
		0.470	-0.171	0.610	-0.247		
		0.490	-0.204	0.650	0.494**		
		0.500	-0.230	0.700	-0.502		
		0.520	-0.248	0.750	-0.535		
		0.530	-0.234	0.820	-0.327		
		0.550	-0.298	0.890	-0.103		
		0.560	-0.255	0.900	-0.077		
		0.580	-0.265	0.960	0.057		
		0.590	-0.307				
		0.600	-0.338				
		0.640	-0.477				
		0.700	-0.410				
		0.750	-0.035**				
		0.820	-0.251				
		0.870	-0.223				
		0.930	-0.088				
		0.960	-0.023				
			Lower Surface				
0.020	-0.274	0.020	-0.055	0.020	0.054	0.020	0.421
0.110	-0.265	0.060	-0.022	0.060	0.036	0.060	1.065**
0.230	-0.080	0.090	-0.097	0.090	1.014**	0.110	-0.105
0.400	-0.067	0.120	-0.143	0.120	-0.352	0.250	-0.243
0.490	-0.081	0.200	-0.150	0.200	-0.226	0.400	-0.260
0.630	1.756**	0.260	-0.256	0.250	-0.224	0.490	-0.338
0.750	0.014	0.400	-0.169	0.400	-0.196	0.580	-0.330
0.850	0.123	0.490	-0.177	0.490	-0.051	0.650	-0.148
0.900	0.197	0.580	-0.149	0.580	-0.218	0.750	0.093
0.960	0.168	0.640	0.037	0.650	-0.051	0.830	0.273
		0.750	0.173	0.750	-0.051	0.900	0.315
		0.870	0.226	0.890	0.266	0.960	0.258
		0.930	0.209	0.930	0.233		
		0.960	0.177	0.960	-1.968**		
CN =	0.216		0.364		0.353		0.433

Table F-2. Continued.

Flight 221, Wing sweep = 26°, Time = 14-6-22-500, MINF = 0.854, Camber = 0/2, ALPT = 5.99, BETA = -0.36, QINF = 300.3, RNPU = 2.4E+06, CNWP = 0.2446

η = 0.93		0.76		0.59		0.40	
			Upper Surface				
x/c	CP	*x/c*	CP	*x/c*	CP	*x/c*	CP
0.020	-0.697	0.000	0.821	0.000	0.896**	0.010	-0.976
0.060	-0.669	0.020	-0.910	0.020	-0.792	0.020	-0.976
0.110	-0.611	0.040	-0.698	0.060	-2.987**	0.060	-0.993
0.200	-0.383	0.060	-0.807	0.090	-0.845	0.110	-0.922
0.230	-0.376	0.090	-0.772	0.110	-0.867	0.140	-0.936
0.400	-0.202	0.130	-0.779	0.130	-0.772	0.190	-1.957**
0.490	-0.189	0.150	-0.781	0.150	-0.801	0.250	-0.940
0.590	-0.270	0.200	-0.664	0.210	-0.768	0.400	-0.727
0.630	-0.258	0.250	-0.789	0.250	-0.799	0.490	-0.439
0.700	-0.179	0.260	-0.731	0.340	-0.817	0.580	-0.321
0.750	-0.270	0.280	-0.767	0.370	-0.775	0.650	-0.315
0.810	-0.290	0.290	-0.752	0.400	-0.834	0.700	-0.319
0.840	-0.240	0.310	-0.764	0.410	2.553**	0.750	-0.387
0.900	-0.129	0.320	-0.753	0.430	-0.810	0.800	-0.362
0.960	-0.048	0.340	-0.736	0.440	-0.768	0.830	-0.275
		0.350	-0.441**	0.460	-0.649	0.900	-0.134
		0.370	-0.730	0.490	-0.248	0.960	0.015
		0.380	-0.787	0.500	-0.278		
		0.400	-0.676	0.520	-0.197		
		0.410	-0.708	0.540	-0.179		
		0.430	-0.303	0.550	-0.186		
		0.440	-0.183	0.580	-0.235		
		0.460	-0.200	0.600	-0.163		
		0.470	-0.127	0.610	-0.181		
		0.490	-0.122	0.650	0.669**		
		0.500	-0.155	0.700	-0.332		
		0.520	-0.148	0.750	-0.397		
		0.530	-0.139	0.820	-0.320		
		0.550	-0.199	0.890	-0.096		
		0.560	-0.189	0.900	-0.073		
		0.580	-0.186	0.960	0.059		
		0.590	-0.233				
		0.600	-0.261				
		0.640	-0.319				
		0.700	-0.309				
		0.750	-0.033**				
		0.820	-0.256				
		0.870	-0.214				
		0.930	-0.089				
		0.960	-0.024				
			Lower Surface				
0.020	-0.158	0.020	0.017	0.020	0.115	0.020	0.440
0.110	-0.227	0.060	0.025	0.060	0.101	0.060	1.069**
0.230	-0.066	0.090	-0.054	0.090	1.014**	0.110	-0.025
0.400	-0.057	0.120	-0.108	0.120	-0.311	0.250	-0.206
0.490	-0.067	0.200	-0.115	0.200	-0.187	0.400	-0.225
0.630	1.758**	0.260	-0.229	0.250	-0.185	0.490	-0.310
0.750	0.017	0.400	-0.148	0.400	-0.178	0.580	-0.316
0.850	0.104	0.490	-0.163	0.490	-0.052	0.650	-0.138
0.900	0.199	0.580	-0.138	0.580	-0.198	0.750	0.101
0.960	0.159	0.640	0.051	0.650	-0.045	0.830	0.281
		0.750	0.181	0.750	-0.052	0.900	0.321
		0.870	0.230	0.890	0.272	0.960	0.257
		0.930	0.208	0.930	0.236		
		0.960	0.176	0.960	-1.999**		
CN =	0.251		0.417		0.402		0.487

Table F-2. Continued.

Flight 221, Wing sweep = 26°, Time = 14-6-28-000, MINF = 0.849, Camber = 0/2, ALPT = 7.11, BETA = -0.27, QINF = 296.4, RNPU = 2.3E+06, CNWP = 0.3184

η = 0.93		0.76		0.59		0.40	
			Upper Surface				
x/c	CP	*x/c*	CP	*x/c*	CP	*x/c*	CP
0.020	-0.841	0.000	0.752	0.000	0.930**	0.010	-1.044
0.060	-0.805	0.020	-1.069	0.020	-0.929	0.020	-1.134
0.110	-0.795	0.040	-0.826	0.060	-3.046**	0.060	-1.145
0.200	-0.655	0.060	-0.940	0.090	-0.980	0.110	-1.031
0.230	-0.506	0.090	-0.951	0.110	-0.994	0.140	-1.105
0.400	-0.247	0.130	-0.941	0.130	-0.914	0.190	-1.980**
0.490	-0.170	0.150	-0.948	0.150	-0.994	0.250	-1.065
0.590	-0.255	0.200	-0.830	0.210	-0.897	0.400	-0.813
0.630	-0.236	0.250	-0.914	0.250	-0.925	0.490	-0.714
0.700	-0.186	0.260	-0.848	0.340	-0.947	0.580	-0.613
0.750	-0.279	0.280	-0.883	0.370	-0.933	0.650	-0.327
0.810	-0.314	0.290	-0.893	0.400	-0.970	0.700	-0.310
0.840	-0.275	0.310	-0.903	0.410	2.589**	0.750	-0.301
0.900	-0.169	0.320	-0.896	0.430	-0.955	0.800	-0.287
0.960	-0.104	0.340	-0.857	0.440	-0.911	0.830	-0.212
		0.350	-0.502**	0.460	-0.930	0.900	-0.079
		0.370	-0.855	0.490	-0.821	0.960	0.017
		0.380	-0.920	0.500	-0.959		
		0.400	-0.820	0.520	-0.896		
		0.410	-0.898	0.540	-0.882		
		0.430	-0.866	0.550	-0.579		
		0.440	-0.841	0.580	-0.422		
		0.460	-0.937	0.600	-0.312		
		0.470	-0.860	0.610	-0.249		
		0.490	-0.885	0.650	0.776**		
		0.500	-0.567	0.700	-0.215		
		0.520	-0.430	0.750	-0.303		
		0.530	-0.294	0.820	-0.215		
		0.550	-0.264	0.890	-0.071		
		0.560	-0.191	0.900	-0.061		
		0.580	-0.159	0.960	0.054		
		0.590	-0.166				
		0.600	-0.183				
		0.640	-0.171				
		0.700	-0.211				
		0.750	-0.035**				
		0.820	-0.215				
		0.870	-0.226				
		0.930	-0.103				
		0.960	-0.037				
			Lower Surface				
0.020	-0.082	0.020	0.169	0.020	0.245	0.020	0.563
0.110	-0.173	0.060	0.097	0.060	0.156	0.060	1.085**
0.230	-0.053	0.090	0.003	0.090	1.030**	0.110	0.038
0.400	-0.059	0.120	-0.048	0.120	-0.243	0.250	-0.154
0.490	-0.081	0.200	-0.070	0.200	-0.114	0.400	-0.167
0.630	1.783**	0.260	-0.186	0.250	-0.115	0.490	-0.259
0.750	0.008	0.400	-0.117	0.400	-0.128	0.580	-0.288
0.850	0.103	0.490	-0.143	0.490	-0.058	0.650	-0.126
0.900	0.159	0.580	-0.141	0.580	-0.176	0.750	0.099
0.960	0.138	0.640	0.039	0.650	-0.059	0.830	0.287
		0.750	0.177	0.750	-0.065	0.900	0.327
		0.870	0.226	0.890	0.263	0.960	0.257
		0.930	0.206	0.930	0.242		
		0.960	0.158	0.960	-2.050**		
CN =	0.311		0.541		0.529		0.606

Table F-2. Continued.

Flight 191, Wing sweep = 26°, Time = 9-43-28-000, MINF = 0.847, Camber = 5/2, ALPT = 6.05, BETA = -0.03, QINF = 289.2, RNPU = 2.3E+06, CNWP = 0.3660

η = 0.93		0.76		0.59		0.40	
			Upper Surface				
x/c	CP	*x/c*	CP	*x/c*	CP	*x/c*	CP
0.020	0.162	0.000	0.756	0.000	-5.023**	0.010	-0.450
0.060	-0.126	0.020	-0.179	0.020	-0.001	0.020	-0.271
0.110	-0.343	0.040	-0.055	0.060	-0.220**	0.060	-0.670
0.200	-0.836	0.060	-0.325	0.090	-0.378	0.110	-0.839
0.230	-0.813	0.090	-0.422	0.110	-0.655	0.140	-0.977
0.400	-0.114	0.130	-0.568	0.130	-0.722	0.190	-5.699**
0.490	-0.131	0.150	-0.763	0.150	-0.817	0.250	-1.003
0.590	-0.222	0.200	-0.757	0.210	-0.933	0.400	-0.555
0.630	-0.240	0.250	-0.924**	0.250	-0.885	0.490	-0.428
0.700	-0.179	0.260	-0.814	0.340	-0.909	0.580	-0.393
0.750	-0.227	0.280	-0.893	0.370	-0.905	0.650	-0.381
0.810	-0.279	0.290	-0.888	0.400	-0.933	0.700	-0.381
0.840	-0.199	0.310	-0.814	0.410	-0.859	0.750	-0.416
0.900	-0.098	0.320	-0.789	0.430	-0.921	0.800	-0.391
0.960	-0.019	0.340	-0.840	0.440	-0.857	0.830	-0.298
		0.350	-0.416**	0.460	-0.707	0.900	-0.144
		0.370	-0.803	0.490	-0.339	0.960	0.039
		0.380	-0.850	0.500	-0.314		
		0.400	-0.750	0.520	-0.239		
		0.410	-0.866	0.540	-0.222		
		0.430	-0.837	0.550	-0.225		
		0.440	-0.768	0.580	-0.202		
		0.460	-0.710	0.600	-0.211		
		0.470	-0.369	0.610	-0.155		
		0.490	-0.230	0.650	-2.865**		
		0.500	-0.176	0.700	-0.334		
		0.520	-0.174	0.750	-0.393		
		0.530	-0.113	0.820	-0.295		
		0.550	-0.158	0.890	-0.080		
		0.560	-0.128	0.900	-0.071		
		0.580	-0.129	0.960	0.042		
		0.590	-0.156				
		0.600	-0.225				
		0.640	-2.697**				
		0.700	-0.266				
		0.750	-0.263				
		0.820	-2.878**				
		0.870	-0.200				
		0.930	-0.075				
		0.960	0.019				
			Lower Surface				
0.020	-0.651	0.020	-0.678	0.020	-0.281	0.020	0.075
0.110	-0.204	0.060	-0.051	0.060	0.067	0.060	3.062**
0.230	-0.004	0.090	-0.135	0.090	-0.055	0.110	-0.056
0.400	-0.059	0.120	-0.083	0.120	-0.433**	0.250	-0.153
0.490	-0.093	0.200	0.023	0.200	-0.104	0.400	-0.187
0.630	3.088**	0.260	-0.157	0.250	-0.105	0.490	-0.277
0.750	0.035	0.400	-2.895**	0.400	-0.125	0.580	-0.293
0.850	0.104	0.490	-0.125	0.490	0.015	0.650	-0.121
0.900	0.191	0.580	-0.057	0.580	-0.184	0.750	0.149
0.960	0.156	0.640	0.281	0.650	0.040	0.830	0.299
		0.750	0.191	0.750	0.278	0.900	0.374
		0.870	0.232	0.890	********	0.960	0.286
		0.930	0.240	0.930	0.271		
		0.960	0.171	0.960	-2.625**		
CN =	0.242		0.432		0.488		0.478

Table F-2. Continued.

Flight 191, Wing sweep = 26°, Time = 9-43-34-500, MINF = 0.850, Camber = 5/2, ALPT = 7.07, BETA = 0.10, QINF = 292.9, RNPU = 2.3E+06, CNWP = 0.4629

η = 0.93		0.76		0.59		0.40	
			Upper Surface				
x/c	CP	*x/c*	CP	*x/c*	CP	*x/c*	CP
0.020	0.048	0.000	0.847	0.000	-4.974**	0.010	-0.757
0.060	-0.208	0.020	-0.299	0.020	-0.141	0.020	-0.467
0.110	-0.381	0.040	-0.155	0.060	-0.241**	0.060	-0.775
0.200	-0.856	0.060	-0.430	0.090	-0.597	0.110	-0.929
0.230	-0.825	0.090	-0.472	0.110	-0.761	0.140	-1.062
0.400	-0.684	0.130	-0.640	0.130	-0.811	0.190	-5.642**
0.490	-0.147	0.150	-0.810	0.150	-0.902	0.250	-1.061
0.590	-0.164	0.200	-0.803	0.210	-0.963	0.400	-0.758
0.630	-0.194	0.250	-0.992**	0.250	-0.940	0.490	-0.620
0.700	-0.153	0.260	-0.851	0.340	-0.976	0.580	-0.490
0.750	-0.223	0.280	-0.949	0.370	-0.959	0.650	-0.481
0.810	-0.259	0.290	-0.948	0.400	-0.987	0.700	-0.506
0.840	-0.210	0.310	-0.877	0.410	-0.935	0.750	-0.343
0.900	-0.123	0.320	-0.853	0.430	-1.003	0.800	-0.311
0.960	-0.047	0.340	-0.922	0.440	-0.951	0.830	-0.249
		0.350	-0.410**	0.460	-0.986	0.900	-0.094
		0.370	-0.869	0.490	-0.923	0.960	0.057
		0.380	-0.901	0.500	-1.012		
		0.400	-0.814	0.520	-0.989		
		0.410	-0.931	0.540	-1.003		
		0.430	-0.907	0.550	-0.968		
		0.440	-0.818	0.580	-0.578		
		0.460	-0.968	0.600	-0.431		
		0.470	-0.901	0.610	-0.287		
		0.490	-0.876	0.650	-2.843**		
		0.500	-0.877	0.700	-0.214		
		0.520	-0.874	0.750	-0.295		
		0.530	-0.855	0.820	-0.205		
		0.550	-0.870	0.890	-0.049		
		0.560	-0.480	0.900	-0.027		
		0.580	-0.327	0.960	0.054		
		0.590	-0.288				
		0.600	-0.276				
		0.640	-2.677**				
		0.700	-0.130				
		0.750	-0.147				
		0.820	-2.855**				
		0.870	-0.163				
		0.930	-0.039				
		0.960	0.024				
			Lower Surface				
0.020	-0.533	0.020	-0.222	0.020	-0.101	0.020	0.241
0.110	-0.173	0.060	0.054	0.060	0.148	0.060	3.010**
0.230	0.040	0.090	-0.032	0.090	0.032	0.110	0.029
0.400	-0.027	0.120	0.003	0.120	-0.331**	0.250	-0.096
0.490	-0.076	0.200	0.057	0.200	-0.052	0.400	-0.124
0.630	3.035**	0.260	-0.094	0.250	-0.027	0.490	-0.249
0.750	0.039	0.400	-2.873**	0.400	-0.081	0.580	-0.262
0.850	0.092	0.490	-0.103	0.490	0.009	0.650	-0.076
0.900	0.188	0.580	-0.048	0.580	-0.147	0.750	0.173
0.960	0.154	0.640	0.304	0.650	0.051	0.830	0.325
		0.750	0.206	0.750	0.284	0.900	0.392
		0.870	0.245	0.890	********	0.960	0.302
		0.930	0.268	0.930	0.291		
		0.960	0.178	0.960	-2.606**		
CN =	0.349		0.546		0.625		0.597

Table F-2. Continued.

Flight 191, Wing sweep = 26°, Time = 9-43-39-000, MINF = 0.852, Camber = 5/2, ALPT = 7.95, BETA = -0.03, QINF = 297.4, RNPU = 2.3E+06, CNWP = 0.5531

η = 0.93		0.76		0.59		0.40	
			Upper Surface				
x/c	CP	*x/c*	CP	*x/c*	CP	*x/c*	CP
0.020	-0.078	0.000	0.893	0.000	-4.920**	0.010	-0.826
0.060	-0.336	0.020	-0.479	0.020	-0.259	0.020	-0.686
0.110	-0.424	0.040	-0.253	0.060	-0.379**	0.060	-0.808
0.200	-0.882	0.060	-0.539	0.090	-0.717	0.110	-1.025
0.230	-0.856	0.090	-0.610	0.110	-0.868	0.140	-1.136
0.400	-0.778	0.130	-0.710	0.130	-0.876	0.190	-5.577**
0.490	-0.656	0.150	-0.861	0.150	-0.963	0.250	-1.167
0.590	-0.172	0.200	-0.858	0.210	-1.035	0.400	-0.822
0.630	-0.193	0.250	-1.020**	0.250	-0.990	0.490	-0.773
0.700	-0.152	0.260	-0.898	0.340	-1.046	0.580	-0.638
0.750	-0.219	0.280	-0.989	0.370	-1.015	0.650	-0.569
0.810	-0.254	0.290	-1.017	0.400	-1.030	0.700	-0.628
0.840	-0.206	0.310	-0.931	0.410	-0.999	0.750	-0.609
0.900	-0.157	0.320	-0.921	0.430	-1.072	0.800	-0.247
0.960	-0.074	0.340	-0.962	0.440	-1.023	0.830	-0.176
		0.350	-0.415**	0.460	-1.067	0.900	-0.038
		0.370	-0.924	0.490	-0.952	0.960	0.036
		0.380	-0.946	0.500	-1.080		
		0.400	-0.858	0.520	-1.017		
		0.410	-0.986	0.540	-1.049		
		0.430	-0.974	0.550	-1.032		
		0.440	-0.901	0.580	-1.002		
		0.460	-1.044	0.600	-1.007		
		0.470	-0.957	0.610	-0.938		
		0.490	-0.939	0.650	-2.820**		
		0.500	-0.925	0.700	-0.408		
		0.520	-0.951	0.750	-0.455		
		0.530	-0.909	0.820	-0.148		
		0.550	-0.938	0.890	0.006		
		0.560	-0.956	0.900	0.014		
		0.580	-0.934	0.960	0.084		
		0.590	-0.935				
		0.600	-1.006				
		0.640	-2.658**				
		0.700	-0.237				
		0.750	-0.071				
		0.820	-2.833**				
		0.870	-0.087				
		0.930	0.014				
		0.960	0.055				
			Lower Surface				
0.020	-0.341	0.020	-0.036	0.020	0.035	0.020	0.362
0.110	-0.113	0.060	0.118	0.060	0.235	0.060	2.944**
0.230	0.067	0.090	0.033	0.090	0.099	0.110	0.058
0.400	-0.033	0.120	0.049	0.120	-0.256**	0.250	-0.039
0.490	-0.088	0.200	0.079	0.200	-0.018	0.400	-0.091
0.630	2.969**	0.260	-0.048	0.250	0.019	0.490	-0.192
0.750	0.021	0.400	-2.850**	0.400	-0.065	0.580	-0.214
0.850	0.099	0.490	-0.078	0.490	0.040	0.650	-0.070
0.900	0.183	0.580	-0.042	0.580	-0.136	0.750	0.179
0.960	0.133	0.640	0.308	0.650	0.052	0.830	0.322
		0.750	0.204	0.750	0.281	0.900	0.386
		0.870	0.260	0.890	********	0.960	0.300
		0.930	0.255	0.930	0.300		
		0.960	0.184	0.960	-2.588**		
CN =	0.430		0.662		0.750		0.702

Table F-2. Continued.

Flight 191, Wing sweep = 26°, Time = 9-43-41-000, MINF = 0.853, Camber = 5/2, ALPT = 9.02, BETA = -0.01, QINF = 300.3, RNPU = 2.4E+06, CNWP = 0.5452

η = 0.93		0.76		0.59		0.40	
			Upper Surface				
x/c	CP	*x/c*	CP	*x/c*	CP	*x/c*	CP
0.020	-0.203	0.000	0.913	0.000	-4.887**	0.010	-0.782
0.060	-0.444	0.020	-0.627	0.020	-0.400	0.020	-0.848
0.110	-0.567	0.040	-0.325	0.060	-0.376**	0.060	-0.958
0.200	-0.939	0.060	-0.626	0.090	-0.799	0.110	-1.094
0.230	-0.871	0.090	-0.730	0.110	-0.959	0.140	-1.175
0.400	-0.832	0.130	-0.814	0.130	-0.964	0.190	-5.538**
0.490	-0.744	0.150	-0.948	0.150	-1.029	0.250	-1.242
0.590	-0.205	0.200	-0.929	0.210	-1.105	0.400	-0.862
0.630	-0.183	0.250	-1.116**	0.250	-1.060	0.490	-0.813
0.700	-0.144	0.260	-0.958	0.340	-1.128	0.580	-0.712
0.750	-0.232	0.280	-1.060	0.370	-1.100	0.650	-0.631
0.810	-0.282	0.290	-1.073	0.400	-1.100	0.700	-0.711
0.840	-0.234	0.310	-1.013	0.410	-1.067	0.750	-0.538
0.900	-0.173	0.320	-0.976	0.430	-1.131	0.800	-0.259
0.960	-0.091	0.340	-1.036	0.440	-1.086	0.830	-0.175
		0.350	-0.407**	0.460	-1.129	0.900	-0.055
		0.370	-0.998	0.490	-1.024	0.960	-0.002
		0.380	-1.013	0.500	-1.132		
		0.400	-0.937	0.520	-1.077		
		0.410	-1.051	0.540	-1.122		
		0.430	-1.030	0.550	-1.109		
		0.440	-0.963	0.580	-1.010		
		0.460	-1.104	0.600	-0.680		
		0.470	-1.013	0.610	-0.467		
		0.490	-0.915	0.650	-2.808**		
		0.500	-0.954	0.700	-0.454		
		0.520	-0.837	0.750	-0.530		
		0.530	-0.742	0.820	-0.324		
		0.550	-0.530	0.890	-0.132		
		0.560	-0.491	0.900	-0.154		
		0.580	-0.449	0.960	-0.061		
		0.590	-0.467				
		0.600	-0.475				
		0.640	-2.647**				
		0.700	-0.337				
		0.750	-0.200				
		0.820	-2.820**				
		0.870	-0.125				
		0.930	-0.085				
		0.960	-0.074				
			Lower Surface				
0.020	-0.189	0.020	0.106	0.020	0.168	0.020	0.518
0.110	-0.080	0.060	0.205	0.060	0.297	0.060	2.901**
0.230	0.112	0.090	0.109	0.090	0.182	0.110	0.139
0.400	-0.003	0.120	0.126	0.120	-0.194**	0.250	0.029
0.490	-0.080	0.200	0.125	0.200	0.012	0.400	-0.039
0.630	2.925**	0.260	-0.018	0.250	0.063	0.490	-0.160
0.750	0.012	0.400	-2.838**	0.400	-0.019	0.580	-0.202
0.850	0.079	0.490	-0.073	0.490	0.017	0.650	-0.062
0.900	0.148	0.580	-0.056	0.580	-0.120	0.750	0.173
0.960	0.130	0.640	0.292	0.650	0.052	0.830	0.334
		0.750	0.185	0.750	0.263	0.900	0.397
		0.870	0.220	0.890	********	0.960	0.276
		0.930	0.190	0.930	0.262		
		0.960	0.105	0.960	-2.578**		
CN =	0.484		0.678		0.811		0.783

Table F-2. Continued.

Flight 195, Wing sweep = 26°, Time = 10-44-14-000, MINF = 0.851, Camber = 5/2, ALPT = 6.08, BETA = 0.18, QINF = 288.6, RNPU = 2.3E+06, CNWP = 0.3727

η = 0.93		0.76		0.59		0.40	
			Upper Surface				
x/c	CP	*x/c*	CP	*x/c*	CP	*x/c*	CP
0.020	0.145	0.000	0.778**	0.000	-4.690**	0.010	-0.504
0.060	-0.154	0.020	-0.193	0.020	-0.027	0.020	-0.265
0.110	-0.338	0.040	-0.063	0.060	-0.921**	0.060	-0.709
0.200	-0.852	0.060	-0.350	0.090	-0.496	0.110	-0.860
0.230	-0.808	0.090	-0.426	0.110	-0.669	0.140	1.949**
0.400	-0.162	0.130	-0.592	0.130	-0.733	0.190	-4.552**
0.490	-0.121	0.150	-0.778	0.150	-0.839	0.250	-1.028
0.590	-0.193	0.200	-0.773	0.210	-0.929	0.400	-0.715
0.630	-0.218	0.250	-0.935	0.250	-0.896	0.490	-0.472
0.700	-0.184	0.260	-0.803	0.340	-0.952	0.580	-0.420
0.750	-0.229	0.280	-0.889	0.370	-0.942	0.650	-0.445
0.810	-0.261	0.290	-0.893	0.400	-0.936	0.700	-0.413
0.840	-0.204	0.310	-0.821	0.410	-0.902	0.750	-0.396
0.900	-0.107	0.320	-0.813	0.430	-0.948	0.800	-0.363
0.960	-0.036	0.340	-0.865	0.440	-0.900	0.830	-0.297
		0.350	-0.410**	0.460	-0.918	0.900	-0.134
		0.370	-0.824	0.490	-0.794	0.960	0.039
		0.380	-0.855	0.500	-0.543		
		0.400	-0.768	0.520	-0.385		
		0.410	-0.878	0.540	-0.340		
		0.430	-0.832	0.550	-0.299		
		0.440	-0.726	0.580	-0.250		
		0.460	-0.962	0.600	-0.264		
		0.470	-0.877	0.610	-0.113		
		0.490	-0.759	0.650	-1.720**		
		0.500	-0.360	0.700	-0.276		
		0.520	-0.319	0.750	-0.350		
		0.530	-0.191	0.820	-0.270		
		0.550	-0.180	0.890	-0.085		
		0.560	-0.128	0.900	-0.059		
		0.580	-0.116	0.960	0.030		
		0.590	-0.156				
		0.600	-0.164				
		0.640	-1.553**				
		0.700	-0.225				
		0.750	-0.234				
		0.820	-1.733**				
		0.870	-0.194				
		0.930	-0.061				
		0.960	0.014				
			Lower Surface				
0.020	-0.580	0.020	0.153	0.020	-0.259	0.020	0.092**
0.110	-0.205	0.060	-0.025	0.060	0.044	0.060	2.042**
0.230	0.003	0.090	-0.107	0.090	-0.053	0.110	-0.065
0.400	-0.068	0.120	-0.073	0.120	-0.423	0.250	-0.147
0.490	-0.083	0.200	0.025	0.200	-0.098	0.400	-0.166
0.630	2.087**	0.260	-0.140	0.250	-0.091	0.490	-0.271
0.750	0.029	0.400	-1.751**	0.400	-0.144	0.580	-0.293
0.850	0.119	0.490	-0.142	0.490	0.003	0.650	-0.119
0.900	0.187	0.580	-0.070	0.580	-0.182	0.750	0.156
0.960	0.150	0.640	0.288	0.650	0.020	0.830	0.297
		0.750	0.165	0.750	0.270	0.900	0.378
		0.870	0.229	0.890	********	0.960	0.287
		0.930	0.243	0.930	0.282		
		0.960	0.163	0.960	-1.750**		
CN =	0.250		0.450		0.500		0.510

Table F-2. Continued.

Flight 195, Wing sweep = 26°, Time = 10-44-36-000, MINF = 0.855, Camber = 5/2, ALPT = 7.04, BETA = 0.18, QINF = 290.3, RNPU = 2.3E+06, CNWP = 0.4688

η = 0.93		0.76		0.59		0.40	
			Upper Surface				
x/c	CP	*x/c*	CP	*x/c*	CP	*x/c*	CP
0.020	0.054	0.000	0.831**	0.000	-4.655**	0.010	-0.733
0.060	-0.212	0.020	-0.304	0.020	-0.136	0.020	-0.452
0.110	-0.387	0.040	-0.148	0.060	-0.895**	0.060	-0.785
0.200	-0.866	0.060	-0.436	0.090	-0.605	0.110	-0.940
0.230	-0.835	0.090	-0.470	0.110	-0.770	0.140	1.938**
0.400	-0.700	0.130	-0.634	0.130	-0.808	0.190	-4.518**
0.490	-0.215	0.150	-0.811	0.150	-0.887	0.250	-1.059
0.590	-0.164	0.200	-0.801	0.210	-0.984	0.400	-0.782
0.630	-0.190	0.250	-0.976	0.250	-0.943	0.490	-0.686
0.700	-0.164	0.260	-0.854	0.340	-1.003	0.580	-0.541
0.750	-0.220	0.280	-0.950	0.370	-1.002	0.650	-0.515
0.810	-0.260	0.290	-0.950	0.400	-0.983	0.700	-0.534
0.840	-0.211	0.310	-0.867	0.410	-0.954	0.750	-0.567
0.900	-0.137	0.320	-0.863	0.430	-1.015	0.800	-0.272
0.960	-0.058	0.340	-0.917	0.440	-0.957	0.830	-0.230
		0.350	-0.411**	0.460	-0.982	0.900	-0.068
		0.370	-0.872	0.490	-0.903	0.960	0.046
		0.380	-0.902	0.500	-1.018		
		0.400	-0.835	0.520	-0.982		
		0.410	-0.939	0.540	-1.028		
		0.430	-0.918	0.550	-0.979		
		0.440	-0.822	0.580	-0.948		
		0.460	-1.017	0.600	-0.923		
		0.470	-0.898	0.610	-0.639		
		0.490	-0.890	0.650	-1.703**		
		0.500	-0.909	0.700	-0.252		
		0.520	-0.885	0.750	-0.300		
		0.530	-0.861	0.820	-0.174		
		0.550	-0.899	0.890	-0.043		
		0.560	-0.899	0.900	-0.019		
		0.580	-0.837	0.960	0.056		
		0.590	-0.603				
		0.600	-0.457				
		0.640	-1.536**				
		0.700	-0.130				
		0.750	-0.114				
		0.820	-1.715**				
		0.870	-0.145				
		0.930	-0.038				
		0.960	0.029				
			Lower Surface				
0.020	-0.588	0.020	-0.180	0.020	-0.137	0.020	0.224**
0.110	-0.169	0.060	0.048	0.060	0.120	0.060	2.038**
0.230	0.042	0.090	-0.032	0.090	0.017	0.110	0.006
0.400	-0.057	0.120	-0.019	0.120	-0.355	0.250	-0.098
0.490	-0.087	0.200	0.059	0.200	-0.055	0.400	-0.127
0.630	2.083**	0.260	-0.109	0.250	-0.045	0.490	-0.239
0.750	0.017	0.400	-1.733**	0.400	-0.115	0.580	-0.263
0.850	0.114	0.490	-0.118	0.490	0.010	0.650	-0.103
0.900	0.177	0.580	-0.054	0.580	-0.155	0.750	0.152
0.960	0.140	0.640	0.298	0.650	0.035	0.830	0.303
		0.750	0.171	0.750	0.276	0.900	0.390
		0.870	0.245	0.890	********	0.960	0.290
		0.930	0.257	0.930	0.288		
		0.960	0.173	0.960	-1.732**		
CN =	0.349		0.552		0.630		0.598

Table F-2. Continued.

Flight 195, Wing sweep = 26°, Time = 10-45-4-500, MINF = 0.851, Camber = 5/2, ALPT = 7.91, BETA = -0.08, QINF = 271.7, RNPU = 2.1E+06, CNWP = 0.5256

η = 0.93		0.76		0.59		0.40	
			Upper Surface				
x/c	CP	*x/c*	CP	*x/c*	CP	*x/c*	CP
0.020	-0.091	0.000	0.895**	0.000	-4.860**	0.010	-0.790
0.060	-0.344	0.020	-0.500	0.020	-0.280	0.020	-0.770
0.110	-0.435	0.040	-0.249	0.060	-0.975**	0.060	-0.822
0.200	-0.895	0.060	-0.586	0.090	-0.734	0.110	-1.009
0.230	-0.834	0.090	-0.630	0.110	-0.876	0.140	2.087**
0.400	-0.769	0.130	-0.733	0.130	-0.888	0.190	-4.713**
0.490	-0.561	0.150	-0.877	0.150	-0.977	0.250	-1.178
0.590	-0.164	0.200	-0.852	0.210	-1.051	0.400	-0.834
0.630	-0.178	0.250	-1.034	0.250	-1.016	0.490	-0.769
0.700	-0.151	0.260	-0.904	0.340	-1.072	0.580	-0.631
0.750	-0.215	0.280	-1.009	0.370	-1.055	0.650	-0.593
0.810	-0.262	0.290	-1.003	0.400	-1.067	0.700	-0.637
0.840	-0.217	0.310	-0.928	0.410	-1.029	0.750	-0.509
0.900	-0.152	0.320	-0.925	0.430	-1.085	0.800	-0.235
0.960	-0.069	0.340	-0.987	0.440	-1.029	0.830	-0.178
		0.350	-0.412**	0.460	-1.052	0.900	-0.036
		0.370	-0.931	0.490	-0.973	0.960	0.038
		0.380	-0.957	0.500	-1.082		
		0.400	-0.876	0.520	-1.052		
		0.410	-1.001	0.540	-1.082		
		0.430	-0.977	0.550	-1.044		
		0.440	-0.871	0.580	-1.035		
		0.460	-1.097	0.600	-1.037		
		0.470	-0.979	0.610	-0.930		
		0.490	-0.956	0.650	-1.706**		
		0.500	-0.961	0.700	-0.336		
		0.520	-0.937	0.750	-0.391		
		0.530	-0.919	0.820	-0.123		
		0.550	-0.944	0.890	-0.012		
		0.560	-0.965	0.900	0.002		
		0.580	-0.929	0.960	0.068		
		0.590	-0.889				
		0.600	-0.660				
		0.640	-1.528**				
		0.700	-0.203				
		0.750	-0.074				
		0.820	-1.720**				
		0.870	-0.099				
		0.930	-0.009				
		0.960	0.048				
			Lower Surface				
0.020	-0.339	0.020	-0.108	0.020	0.025	0.020	0.347**
0.110	-0.105	0.060	0.145	0.060	0.231	0.060	2.290**
0.230	0.081	0.090	0.047	0.090	0.101	0.110	0.034
0.400	-0.032	0.120	0.037	0.120	-0.305	0.250	-0.030
0.490	-0.072	0.200	0.107	0.200	-0.027	0.400	-0.071
0.630	2.338**	0.260	-0.060	0.250	0.017	0.490	-0.189
0.750	0.026	0.400	-1.739**	0.400	-0.068	0.580	-0.219
0.850	0.108	0.490	-0.089	0.490	0.035	0.650	-0.077
0.900	0.172	0.580	-0.034	0.580	-0.121	0.750	0.179
0.960	0.134	0.640	0.323	0.650	0.045	0.830	0.321
		0.750	0.181	0.750	0.287	0.900	0.399
		0.870	0.227	0.890	********	0.960	0.290
		0.930	0.250	0.930	0.290		
		0.960	0.164	0.960	-1.737**		
CN =	0.427		0.633		0.730		0.693

Table F-2. Continued.

Flight 195, Wing sweep = 26°, Time = 10-45-22-500, MINF = 0.861, Camber = 5/2, ALPT = 8.03, BETA = -0.14, QINF = 286.9, RNPU = 2.2E+06, CNWP = 0.5330

η = 0.93		0.76		0.59		0.40	
			Upper Surface				
x/c	CP	*x/c*	CP	*x/c*	CP	*x/c*	CP
0.020	-0.064	0.000	0.892**	0.000	-4.660**	0.010	-0.804
0.060	-0.308	0.020	-0.445	0.020	-0.252	0.020	-0.719
0.110	-0.424	0.040	-0.240	0.060	-1.016**	0.060	-0.812
0.200	-0.900	0.060	-0.534	0.090	-0.707	0.110	-1.009
0.230	-0.821	0.090	-0.608	0.110	-0.860	0.140	1.959**
0.400	-0.776	0.130	-0.706	0.130	-0.877	0.190	-4.521**
0.490	-0.684	0.150	-0.859	0.150	-0.928	0.250	-1.142
0.590	-0.270	0.200	-0.835	0.210	-1.031	0.400	-0.823
0.630	-0.184	0.250	-1.040	0.250	-1.004	0.490	-0.770
0.700	-0.131	0.260	-0.896	0.340	-1.059	0.580	-0.665
0.750	-0.207	0.280	-0.986	0.370	-1.043	0.650	-0.615
0.810	-0.259	0.290	-1.018	0.400	-1.037	0.700	-0.648
0.840	-0.194	0.310	-0.920	0.410	-1.018	0.750	-0.700
0.900	-0.153	0.320	-0.906	0.430	-1.087	0.800	-0.320
0.960	-0.077	0.340	-0.968	0.440	-1.019	0.830	-0.219
		0.350	-0.412**	0.460	-1.050	0.900	-0.056
		0.370	-0.920	0.490	-0.956	0.960	0.008
		0.380	-0.951	0.500	-1.057		
		0.400	-0.875	0.520	-1.026		
		0.410	-0.990	0.540	-1.066		
		0.430	-0.962	0.550	-1.039		
		0.440	-0.862	0.580	-1.028		
		0.460	-1.088	0.600	-1.032		
		0.470	-0.979	0.610	-0.936		
		0.490	-0.949	0.650	-1.673**		
		0.500	-0.944	0.700	-0.483		
		0.520	-0.955	0.750	-0.502		
		0.530	-0.918	0.820	-0.221		
		0.550	-0.952	0.890	-0.044		
		0.560	-0.958	0.900	-0.043		
		0.580	-0.919	0.960	-0.002		
		0.590	-0.955				
		0.600	-0.928				
		0.640	-1.504**				
		0.700	-0.323				
		0.750	-0.164				
		0.820	-1.686**				
		0.870	-0.094				
		0.930	-0.035				
		0.960	0.003				
			Lower Surface				
0.020	-0.352	0.020	-0.045	0.020	0.013	0.020	0.354**
0.110	-0.125	0.060	0.130	0.060	0.221	0.060	2.112**
0.230	0.070	0.090	0.036	0.090	0.100	0.110	0.052
0.400	-0.050	0.120	0.039	0.120	-0.292	0.250	-0.036
0.490	-0.111	0.200	0.097	0.200	-0.023	0.400	-0.083
0.630	2.157**	0.260	-0.069	0.250	0.004	0.490	-0.206
0.750	0.013	0.400	-1.704**	0.400	-0.081	0.580	-0.257
0.850	0.099	0.490	-0.104	0.490	0.014	0.650	-0.100
0.900	0.165	0.580	-0.055	0.580	-0.149	0.750	0.158
0.960	0.133	0.640	0.295	0.650	0.031	0.830	0.310
		0.750	0.177	0.750	0.283	0.900	0.392
		0.870	0.223	0.890	********	0.960	0.281
		0.930	0.222	0.930	0.279		
		0.960	0.125	0.960	-1.703**		
CN =	0.421		0.651		0.742		0.694

Table F-2. Continued.

Flight 195, Wing sweep = 26°, Time = 10-45-27-500, MINF = 0.861, Camber = 5/2, ALPT = 9.21, BETA = -0.19, QINF = 288.6, RNPU = 2.3E+06, CNWP = 0.5588

η = 0.93		0.76		0.59		0.40	
			Upper Surface				
x/c	CP	*x/c*	CP	*x/c*	CP	*x/c*	CP
0.020	-0.217	0.000	0.897**	0.000	-4.645**	0.010	-0.753
0.060	-0.448	0.020	-0.657	0.020	-0.405	0.020	-0.843
0.110	-0.584	0.040	-0.343	0.060	-1.007**	0.060	-0.980
0.200	-0.946	0.060	-0.625	0.090	-0.820	0.110	-1.062
0.230	-0.853	0.090	-0.729	0.110	-0.974	0.140	1.955**
0.400	-0.847	0.130	-0.828	0.130	-0.970	0.190	-4.507**
0.490	-0.730	0.150	-0.954	0.150	-1.024	0.250	-1.222
0.590	-0.179	0.200	-0.943	0.210	-1.111	0.400	-0.887
0.630	-0.169	0.250	-1.084	0.250	-1.071	0.490	-0.812
0.700	-0.155	0.260	-0.966	0.340	-1.147	0.580	-0.746
0.750	-0.255	0.280	-1.061	0.370	-1.108	0.650	-0.653
0.810	-0.287	0.290	-1.075	0.400	-1.119	0.700	-0.707
0.840	-0.253	0.310	-0.994	0.410	-1.083	0.750	-0.625
0.900	-0.198	0.320	-0.984	0.430	-1.158	0.800	-0.275
0.960	-0.111	0.340	-1.047	0.440	-1.097	0.830	-0.186
		0.350	-0.402**	0.460	-1.125	0.900	-0.082
		0.370	-0.995	0.490	-1.040	0.960	-0.016
		0.380	-1.036	0.500	-1.138		
		0.400	-0.935	0.520	-1.123		
		0.410	-1.062	0.540	-1.144		
		0.430	-0.954	0.550	-1.101		
		0.440	-0.811	0.580	-0.801		
		0.460	-0.917	0.600	-0.643		
		0.470	-0.634	0.610	-0.477		
		0.490	-0.621	0.650	-1.676**		
		0.500	-0.525	0.700	-0.459		
		0.520	-0.512	0.750	-0.541		
		0.530	-0.443	0.820	-0.373		
		0.550	-0.464	0.890	-0.206		
		0.560	-0.438	0.900	-0.219		
		0.580	-0.424	0.960	-0.160		
		0.590	-0.442				
		0.600	-0.484				
		0.640	-1.508**				
		0.700	-0.364				
		0.750	-0.269				
		0.820	-1.689**				
		0.870	-0.207				
		0.930	-0.234				
		0.960	-0.197				
			Lower Surface				
0.020	-0.192	0.020	0.123	0.020	0.145	0.020	0.503**
0.110	-0.073	0.060	0.220	0.060	0.305	0.060	2.086**
0.230	0.115	0.090	0.109	0.090	0.179	0.110	0.097
0.400	-0.043	0.120	0.111	0.120	-0.216	0.250	0.018
0.490	-0.096	0.200	0.129	0.200	0.001	0.400	-0.038
0.630	2.131**	0.260	-0.020	0.250	0.060	0.490	-0.164
0.750	-0.008	0.400	-1.707**	0.400	-0.047	0.580	-0.216
0.850	0.073	0.490	-0.097	0.490	0.016	0.650	-0.082
0.900	0.141	0.580	-0.041	0.580	-0.134	0.750	0.159
0.960	0.109	0.640	0.292	0.650	0.030	0.830	0.311
		0.750	0.135	0.750	0.268	0.900	0.392
		0.870	0.176	0.890	********	0.960	0.276
		0.930	0.155	0.930	0.240		
		0.960	0.046	0.960	-1.705**		
CN =	0.475		0.647		0.803		0.767

Table F-2. Continued.

Flight 195, Wing sweep = 26°, Time = 10-45-41-500, MINF = 0.845, Camber = 5/2, ALPT = 11.03, BETA = -0.06, QINF = 281.2, RNPU = 2.2E+06, CNWP = 0.3657

h = 0.93		0.76		0.59		0.40	
			Upper Surface				
x/c	CP	x/c	CP	x/c	CP	x/c	CP
0.020	-0.691	0.000	0.838**	0.000	-4.789**	0.010	-1.101
0.060	-0.696	0.020	-1.083	0.020	-0.846	0.020	-1.104
0.110	-0.759	0.040	-0.690	0.060	-1.189**	0.060	-1.200
0.200	-1.060	0.060	-0.862	0.090	-1.023	0.110	-1.312
0.230	-1.005	0.090	-0.924	0.110	-1.182	0.140	2.029**
0.400	-0.998	0.130	-1.023	0.130	-1.180	0.190	-4.648**
0.490	-0.386	0.150	-1.137	0.150	-1.220	0.250	-0.986
0.590	-0.219	0.200	-1.113	0.210	-1.191	0.400	-0.814
0.630	-0.233	0.250	-1.256	0.250	-0.788	0.490	-0.784
0.700	-0.214	0.260	-1.113	0.340	-0.740	0.580	-0.712
0.750	-0.269	0.280	-1.219	0.370	-0.708	0.650	-0.582
0.810	-0.350	0.290	-1.258	0.400	-0.697	0.700	-0.616
0.840	-0.275	0.310	-1.157	0.410	-0.665	0.750	-0.524
0.900	-0.205	0.320	-1.136	0.430	-0.712	0.800	-0.463
0.960	-0.143	0.340	-1.215	0.440	-0.642	0.830	-0.440
		0.350	-0.431**	0.460	-0.656	0.900	-0.330
		0.370	-1.155	0.490	-0.580	0.960	-0.271
		0.380	-1.183	0.500	-0.616		
		0.400	-1.043	0.520	-0.584		
		0.410	-1.040	0.540	-0.601		
		0.430	-0.869	0.550	-0.593		
		0.440	-0.735	0.580	-0.589		
		0.460	-0.868	0.600	-0.586		
		0.470	-0.697	0.610	-0.421		
		0.490	-0.653	0.650	-1.742**		
		0.500	-0.604	0.700	-0.481		
		0.520	-0.606	0.750	-0.551		
		0.530	-0.505	0.820	-0.431		
		0.550	-0.505	0.890	-0.403		
		0.560	-0.421	0.900	-0.354		
		0.580	-0.384	0.960	-0.363		
		0.590	-0.350				
		0.600	-0.342				
		0.640	-1.570**				
		0.700	-0.185				
		0.750	-0.114				
		0.820	-1.755**				
		0.870	-0.142				
		0.930	-0.126				
		0.960	-0.126				
			Lower Surface				
0.020	0.024	0.020	0.206	0.020	0.341	0.020	0.621**
0.110	0.013	0.060	0.338	0.060	0.421	0.060	2.119**
0.230	0.159	0.090	0.215	0.090	0.287	0.110	0.217
0.400	-0.012	0.120	0.194	0.120	-0.129	0.250	0.091
0.490	-0.086	0.200	0.187	0.200	0.064	0.400	0.017
0.630	2.165**	0.260	0.034	0.250	0.130	0.490	-0.112
0.750	-0.007	0.400	-1.774**	0.400	-0.006	0.580	-0.180
0.850	0.064	0.490	-0.075	0.490	0.018	0.650	-0.083
0.900	0.125	0.580	-0.041	0.580	-0.121	0.750	0.141
0.960	0.081	0.640	0.288	0.650	0.012	0.830	0.273
		0.750	0.139	0.750	0.237	0.900	0.337
		0.870	0.180	0.890	********	0.960	0.178
		0.930	0.156	0.930	0.167		
		0.960	0.037	0.960	-1.773**		
CN =	0.549		0.703		0.732		0.815

Table F-2. Continued.

Flight 195, Wing sweep = 26°, Time = 10-45-49-500, MINF = 0.847, Camber = 5/2, ALPT = 12.01, BETA = 0.02, QINF = 294.4, RNPU = 2.3E+06, CNWP = 0.3023

η = 0.93		0.76		0.59		0.40	
			Upper Surface				
x/c	CP	*x/c*	CP	*x/c*	CP	*x/c*	CP
0.020	-0.809	0.000	0.792**	0.000	-4.653**	0.010	-1.143
0.060	-0.819	0.020	-1.151	0.020	-0.937	0.020	-1.167
0.110	-0.880	0.040	-0.772	0.060	-1.193**	0.060	-1.258
0.200	-1.097	0.060	-0.954	0.090	-1.106	0.110	-1.379
0.230	-1.079	0.090	-1.029	0.110	-1.270	0.140	1.921**
0.400	-0.988	0.130	-1.110	0.130	-1.033	0.190	-4.518**
0.490	-0.400	0.150	-1.206	0.150	-0.881	0.250	-0.976
0.590	-0.284	0.200	-1.182	0.210	-0.854	0.400	-0.824
0.630	-0.259	0.250	-1.324	0.250	-0.735	0.490	-0.783
0.700	-0.216	0.260	-1.179	0.340	-0.743	0.580	-0.717
0.750	-0.246	0.280	-1.283	0.370	-0.706	0.650	-0.601
0.810	-0.316	0.290	-1.290	0.400	-0.708	0.700	-0.647
0.840	-0.275	0.310	-1.194	0.410	-0.644	0.750	-0.572
0.900	-0.190	0.320	-1.180	0.430	-0.693	0.800	-0.513
0.960	-0.156	0.340	-1.179	0.440	-0.618	0.830	-0.520
		0.350	-0.390**	0.460	-0.623	0.900	-0.390
		0.370	-1.060	0.490	-0.574	0.960	-0.330
		0.380	-1.039	0.500	-0.612		
		0.400	-0.891	0.520	-0.580		
		0.410	-0.909	0.540	-0.607		
		0.430	-0.810	0.550	-0.603		
		0.440	-0.695	0.580	-0.568		
		0.460	-0.858	0.600	-0.565		
		0.470	-0.743	0.610	-0.442		
		0.490	-0.660	0.650	-1.743**		
		0.500	-0.587	0.700	-0.504		
		0.520	-0.583	0.750	-0.589		
		0.530	-0.431	0.820	-0.476		
		0.550	-0.405	0.890	-0.414		
		0.560	-0.293	0.900	-0.376		
		0.580	-0.271	0.960	-0.351		
		0.590	-0.244				
		0.600	-0.247				
		0.640	-1.579**				
		0.700	-0.144				
		0.750	-0.102				
		0.820	-1.756**				
		0.870	-0.170				
		0.930	-0.200				
		0.960	-0.193				
			Lower Surface				
0.020	0.126	0.020	0.195	0.020	0.449	0.020	0.725**
0.110	0.056	0.060	0.397	0.060	0.478	0.060	1.944**
0.230	0.197	0.090	0.279	0.090	0.346	0.110	0.285
0.400	-0.020	0.120	0.249	0.120	-0.043	0.250	0.149
0.490	-0.065	0.200	0.211	0.200	0.094	0.400	0.064
0.630	1.988**	0.260	0.080	0.250	0.183	0.490	-0.073
0.750	-0.035	0.400	-1.773**	0.400	0.020	0.580	-0.141
0.850	0.045	0.490	-0.057	0.490	0.016	0.650	-0.073
0.900	0.109	0.580	-0.029	0.580	-0.102	0.750	0.150
0.960	0.052	0.640	0.283	0.650	0.007	0.830	0.278
		0.750	0.119	0.750	0.237	0.900	0.338
		0.870	0.158	0.890	********	0.960	0.165
		0.930	0.122	0.930	0.154		
		0.960	0.008	0.960	-1.772**		
CN =	0.586		0.720		0.728		0.872

Table F-2. Continued.

Flight 200, Wing sweep = 26°, Time = 8-25-10-500, MINF = 0.857, Camber = 5/2, ALPT = 12.20, BETA = 0.25, QINF = 309.8, RNPU = 2.4E+06, CNWP = 0.3799

η = 0.93		0.76		0.59		0.40	
			Upper Surface				
x/c	CP	*x/c*	CP	*x/c*	CP	*x/c*	CP
0.020	-0.800	0.000	0.789	0.000	0.780**	0.010	-1.067
0.060	-0.815	0.020	-1.022	0.020	-0.915	0.020	-1.107**
0.110	-0.888	0.040	-0.752	0.060	0.110**	0.060	-1.164**
0.200	-1.068	0.060	-0.916	0.090	-1.040	0.110	-1.306
0.230	-1.019	0.090	-0.970	0.110	-1.194	0.140	-1.397
0.400	-1.007	0.130	-1.035	0.130	-1.179	0.190	-1.947**
0.490	-0.608	0.150	-1.166	0.150	-1.073	0.250	-1.069
0.590	-0.312	0.200	-1.174	0.210	-1.203	0.400	-0.912
0.630	-0.249	0.250	-1.243	0.250	-1.014	0.490	-0.819
0.700	-0.189	0.260	-1.119	0.340	-0.803	0.580	-0.710
0.750	-0.239	0.280	-1.173	0.370	-0.796	0.650	-0.657
0.810	-0.213	0.290	-1.173	0.400	-0.755	0.700	-0.648
0.840	-0.222	0.310	-1.152	0.410	-0.762	0.750	-0.574
0.900	-0.212	0.320	-1.140	0.430	-0.768	0.800	-0.488
0.960	-0.129	0.340	-1.070	0.440	-0.733	0.830	-0.513
		0.350	-0.356**	0.460	-0.734	0.900	-0.392
		0.370	-1.014	0.490	-0.683	0.960	-0.324**
		0.380	-1.051	0.500	-0.708		
		0.400	-0.923	0.520	-0.668		
		0.410	-0.912	0.540	-0.678		
		0.430	-0.803	0.550	-0.653		
		0.440	-0.752	0.580	-0.582		
		0.460	-0.754	0.600	-0.609		
		0.470	-0.713	0.610	-0.570		
		0.490	-0.640	0.650	0.037**		
		0.500	-0.664	0.700	-0.484		
		0.520	-0.593	0.750	-0.534		
		0.530	-0.593	0.820	-0.209		
		0.550	-0.545	0.890	-0.362		
		0.560	-0.559	0.900	-0.343		
		0.580	-0.507	0.960	-0.300		
		0.590	-0.572				
		0.600	-0.544				
		0.640	-0.447				
		0.700	-0.437				
		0.750	0.015**				
		0.820	-0.242				
		0.870	-0.160				
		0.930	-0.189				
		0.960	-0.154				
			Lower Surface				
0.020	0.131	0.020	0.434	0.020	0.459	0.020	0.739
0.110	0.060	0.060	0.377	0.060	0.491	0.060	0.312
0.230	0.187	0.090	0.280	0.090	0.366	0.110	0.331
0.400	-0.001	0.120	0.253**	0.120	0.066	0.250	0.155
0.490	-0.033	0.200	0.200	0.200	0.140	0.400	0.051
0.630	1.824**	0.260	0.105	0.250	0.179	0.490	-0.044
0.750	-0.015	0.400	0.017	0.400	0.033	0.580	-0.144
0.850	0.024	0.490	-0.041	0.490	-0.004	0.650	-0.054
0.900	0.120	0.580	-0.095	0.580	-0.110	0.750	0.168
0.960	0.075	0.640	0.034	0.650	0.017	0.830	0.297
		0.750	0.180	0.750	0.004**	0.900	0.331
		0.870	0.142	0.890	0.241	0.960	0.191
		0.930	0.143	0.930	0.151		
		0.960	0.069	0.960	0.576		
CN =	0.608		0.776		0.783		0.888

Table F-2. Continued.

Flight 216, Wing sweep = 26°, Time = 10-44-12-000, MINF = 0.850, Camber = 5/2, ALPT = 3.99, BETA = -0.12, QINF = 291.7, RNPU = 2.3E+06, CNWP = 0.2739

η = 0.93		0.76		0.59		0.40	
			Upper Surface				
x/c	CP	*x/c*	CP	*x/c*	CP	*x/c*	CP
0.020	0.324	0.000	0.579	0.000	0.271**	0.010	-0.126
0.060	-0.032	0.020	0.080	0.020	0.196	0.020	-0.122
0.110	-0.266	0.040	0.176	0.060	0.312**	0.060	-0.502
0.200	-0.744	0.060	-0.206	0.090	-0.325	0.110	-0.607
0.230	-0.254	0.090	-0.296	0.110	-0.538	0.140	-0.904
0.400	-0.227	0.130	-0.454	0.130	-1.979**	0.190	-1.979**
0.490	-0.171	0.150	-0.668	0.150	-0.795	0.250	-0.666
0.590	-0.259	0.200	-0.708	0.210	-0.771	0.400	-0.363
0.630	-0.266	0.250	-0.753	0.250	-0.751	0.490	-0.341
0.700	-0.223	0.260	-0.684	0.340	-0.295	0.580	-0.338
0.750	-0.251	0.280	-0.734	0.370	-0.294	0.650	-0.399
0.810	-0.235	0.290	-0.495	0.400	-0.285	0.700	-0.373
0.840	-0.204	0.310	-0.296	0.410	-3.003**	0.750	-0.439
0.900	-0.116	0.320	-0.283	0.430	-0.305	0.800	-0.583
0.960	-0.008	0.340	-0.223	0.440	-0.299	0.830	-0.502
		0.350	-0.189**	0.460	-0.302	0.900	-0.170
		0.370	-0.224	0.490	-0.236	0.960	-0.006
		0.380	-0.272	0.500	-0.315		
		0.400	-0.203	0.520	-0.288		
		0.410	-0.289	0.540	-0.306		
		0.430	-0.272	0.550	-0.300		
		0.440	-0.204	0.580	-0.322		
		0.460	-0.312	0.600	-0.312		
		0.470	-0.291	0.610	-0.305		
		0.490	-0.286	0.650	-0.764		
		0.500	-0.303	0.700	-0.541		
		0.520	-0.309	0.750	-0.574		
		0.530	-0.292	0.820	-0.338		
		0.550	-0.350	0.890	-0.104		
		0.560	-0.315	0.900	-0.082		
		0.580	-0.304	0.960	0.062		
		0.590	-0.334				
		0.600	-0.351				
		0.640	-0.522				
		0.700	-0.446				
		0.750	-0.025**				
		0.820	-0.279				
		0.870	-0.219				
		0.930	-0.099				
		0.960	-0.032				
			Lower Surface				
0.020	-1.403	0.020	-1.265	0.020	-1.093	0.020	-0.232
0.110	-0.180	0.060	-0.460	0.060	-0.159	0.060	-0.028
0.230	-0.091	0.090	-0.279	0.090	-0.222	0.110	-0.235
0.400	-0.085	0.120	-0.219	0.120	-0.512	0.250	-0.287
0.490	-0.088	0.200	-0.076	0.200	-0.147	0.400	-0.302
0.630	4.526**	0.260	-0.231	0.250	-0.235	0.490	-0.369
0.750	0.022	0.400	-0.163	0.400	-0.250	0.580	-0.352
0.850	0.087	0.490	-0.176	0.490	-0.057	0.650	-0.157
0.900	0.191	0.580	-0.170	0.580	-0.222	0.750	0.104
0.960	0.154	0.640	0.018	0.650	-0.034	0.830	0.256
		0.750	0.171	0.750	-0.030	0.900	0.297
		0.870	0.209	0.890	0.277	0.960	0.260
		0.930	0.215	0.930	0.248		
		0.960	0.182	0.960	0.451		
CN =	0.185		0.269		0.294		0.309

Table F-2. Continued.

Flight 216, Wing sweep = 26°, Time = 10-43-40-000, MINF = 0.845, Camber = 5/2, ALPT = 5.05, BETA = 0.02, QINF = 297.2, RNPU = 2.4E+06, CNWP = 0.3051

η = 0.93		0.76		0.59		0.40	
			Upper Surface				
x/c	CP	*x/c*	CP	*x/c*	CP	*x/c*	CP
0.020	0.209	0.000	0.679	0.000	0.333**	0.010	-0.347
0.060	-0.105	0.020	0.077	0.020	0.098	0.020	-0.229
0.110	-0.351	0.040	0.054	0.060	0.175**	0.060	-0.638
0.200	-0.825	0.060	-0.309	0.090	-0.426	0.110	-0.771
0.230	-0.685	0.090	-0.375	0.110	-0.599	0.140	-1.013
0.400	-0.174	0.130	-0.535	0.130	-2.000**	0.190	-2.000**
0.490	-0.199	0.150	-0.735	0.150	-0.864	0.250	-0.744
0.590	-0.251	0.200	-0.757	0.210	-0.862	0.400	-0.439
0.630	-0.266	0.250	-0.852	0.250	-0.844	0.490	-0.365
0.700	-0.224	0.260	-0.799	0.340	-0.895	0.580	-0.339
0.750	-0.267	0.280	-0.826	0.370	-0.872	0.650	-0.399
0.810	-0.235	0.290	-0.817	0.400	-0.486	0.700	-0.374
0.840	-0.213	0.310	-0.786	0.410	-3.005**	0.750	-0.428
0.900	-0.136	0.320	-0.792	0.430	-0.342	0.800	-0.436
0.960	-0.023	0.340	-0.802	0.440	-0.280	0.830	-0.335
		0.350	-0.417**	0.460	-0.281	0.900	-0.169
		0.370	-0.775	0.490	-0.183	0.960	0.012
		0.380	-0.681	0.500	-0.269		
		0.400	-0.322	0.520	-0.212		
		0.410	-0.274	0.540	-0.255		
		0.430	-0.191	0.550	-0.268		
		0.440	-0.134	0.580	-0.260		
		0.460	-0.199	0.600	-0.280		
		0.470	-0.178	0.610	-0.284		
		0.490	-0.209	0.650	-0.735		
		0.500	-0.217	0.700	-0.521		
		0.520	-0.229	0.750	-0.472		
		0.530	-0.219	0.820	-0.335		
		0.550	-0.280	0.890	-0.108		
		0.560	-0.256	0.900	-0.073		
		0.580	-0.255	0.960	0.060		
		0.590	-0.290				
		0.600	-0.332				
		0.640	-0.365				
		0.700	-0.354				
		0.750	-0.019**				
		0.820	-0.271				
		0.870	-0.224				
		0.930	-0.087				
		0.960	-0.032				
			Lower Surface				
0.020	-0.844	0.020	-0.950	0.020	-0.662	0.020	-0.050
0.110	-0.222	0.060	-0.142	0.060	-0.063	0.060	-0.036
0.230	-0.045	0.090	-0.186	0.090	-0.122	0.110	-0.106
0.400	-0.074	0.120	-0.154	0.120	-0.428	0.250	-0.227
0.490	-0.076	0.200	-0.039	0.200	-0.099	0.400	-0.231
0.630	4.385**	0.260	-0.166	0.250	-0.154	0.490	-0.307
0.750	0.035	0.400	-0.135	0.400	-0.203	0.580	-0.303
0.850	0.095	0.490	-0.154	0.490	-0.046	0.650	-0.144
0.900	0.187	0.580	-0.160	0.580	-0.215	0.750	0.119
0.960	0.134	0.640	0.043	0.650	-0.046	0.830	0.271
		0.750	0.183	0.750	-0.046	0.900	0.328
		0.870	0.226	0.890	0.293	0.960	0.249
		0.930	0.232	0.930	0.246		
		0.960	0.170	0.960	0.454		
CN =	0.243		0.358		0.391		0.383

Table F-2. Continued.

Flight 216, Wing sweep = 26°, Time = 10-47-48-000, MINF = 0.852, Camber = 5/6, ALPT = 4.07, BETA = -0.04, QINF = 304.1, RNPU = 2.4E+06, CNWP = 0.2578

η = 0.93		0.76		0.59		0.40	
			Upper Surface				
x/c	CP	*x/c*	CP	*x/c*	CP	*x/c*	CP
0.020	0.290	0.000	0.569	0.000	0.298**	0.010	-0.160
0.060	-0.048	0.020	0.131	0.020	0.189	0.020	-0.107
0.110	-0.310	0.040	0.171	0.060	0.340**	0.060	-0.506
0.200	-0.755	0.060	-0.196	0.090	-0.326	0.110	-0.599
0.230	-0.300	0.090	-0.293	0.110	-0.532	0.140	-0.903
0.400	-0.230	0.130	-0.465	0.130	-1.970**	0.190	-1.970**
0.490	-0.224	0.150	-0.679	0.150	-0.770	0.250	-0.672
0.590	-0.299	0.200	-0.696	0.210	-0.783	0.400	-0.366
0.630	-0.337	0.250	-0.770	0.250	-0.761	0.490	-0.348
0.700	-0.376	0.260	-0.707	0.340	-0.356	0.580	-0.363
0.750	-0.745	0.280	-0.739	0.370	-0.304	0.650	-0.431
0.810	-0.689	0.290	-0.707	0.400	-0.301	0.700	-0.392
0.840	-0.715	0.310	-0.582	0.410	-2.952**	0.750	-0.483
0.900	-0.143	0.320	-0.473	0.430	-0.335	0.800	-0.926
0.960	-0.033	0.340	-0.266	0.440	-0.305	0.830	-0.872
		0.350	-0.195**	0.460	-0.320	0.900	-0.266
		0.370	-0.223	0.490	-0.254	0.960	-0.220
		0.380	-0.268	0.500	-0.337		
		0.400	-0.200	0.520	-0.290		
		0.410	-0.284	0.540	-0.302		
		0.430	-0.255	0.550	-0.308		
		0.440	-0.221	0.580	-0.324		
		0.460	-0.291	0.600	-0.304		
		0.470	-0.283	0.610	-0.324		
		0.490	-0.296	0.650	-0.817		
		0.500	-0.326	0.700	-0.560		
		0.520	-0.309	0.750	-0.592		
		0.530	-0.313	0.820	-0.896		
		0.550	-0.349	0.890	-0.229		
		0.560	-0.330	0.900	-0.214		
		0.580	-0.321	0.960	-0.125		
		0.590	-0.343				
		0.600	-0.368				
		0.640	-0.543				
		0.700	-0.520				
		0.750	-0.011**				
		0.820	-0.488				
		0.870	-0.453				
		0.930	-0.198				
		0.960	-0.183				
			Lower Surface				
0.020	-1.217	0.020	-1.260	0.020	-1.047	0.020	-0.211
0.110	-0.196	0.060	-0.321	0.060	-0.164	0.060	-0.021
0.230	-0.060	0.090	-0.242	0.090	-0.202	0.110	-0.243
0.400	-0.043	0.120	-0.157	0.120	-0.497	0.250	-0.270
0.490	-0.002	0.200	-0.067	0.200	-0.144	0.400	-0.244
0.630	4.269**	0.260	-0.177	0.250	-0.202	0.490	-0.278
0.750	0.095	0.400	-0.110	0.400	-0.174	0.580	-0.237
0.850	0.175	0.490	-0.110	0.490	-0.038	0.650	-0.024
0.900	0.249	0.580	-0.059	0.580	-0.103	0.750	0.210
0.960	0.158	0.640	0.149	0.650	-0.045	0.830	0.323
		0.750	0.264	0.750	-0.031	0.900	0.385
		0.870	0.266	0.890	0.361	0.960	0.257
		0.930	0.230	0.930	0.291		
		0.960	0.155	0.960	0.450		
CN =	0.335		0.396		0.399		0.426

Table F-2. Continued.

Flight 195, Wing sweep = 26°, Time = 10-47-55-500, MINF = 0.840, Camber = 5/6, ALPT = 5.04, BETA = 0.10, QINF = 287.3, RNPU = 2.3E+06, CNWP = 0.3877

η = 0.93		0.76		0.59		0.40	
			Upper Surface				
x/c	CP	*x/c*	CP	*x/c*	CP	*x/c*	CP
0.020	0.247	0.000	0.689**	0.000	-4.752**	0.010	-0.333
0.060	-0.078	0.020	-0.094	0.020	0.119	0.020	-0.181
0.110	-0.344	0.040	0.038	0.060	-0.832**	0.060	-0.583
0.200	-0.810	0.060	-0.252	0.090	-0.403	0.110	-0.773
0.230	-0.637	0.090	-0.364	0.110	-0.625	0.140	1.989**
0.400	-0.191	0.130	-0.528	0.130	-0.704	0.190	-4.613**
0.490	-0.214	0.150	-0.738	0.150	-0.806	0.250	-0.630
0.590	-0.282	0.200	-0.717	0.210	-0.894	0.400	-0.381
0.630	-0.323	0.250	-0.866	0.250	-0.835	0.490	-0.385
0.700	-0.340	0.260	-0.752	0.340	-0.841	0.580	-0.370
0.750	-0.717	0.280	-0.799	0.370	-0.417	0.650	-0.436
0.810	-0.743	0.290	-0.826	0.400	-0.336	0.700	-0.418
0.840	-0.710	0.310	-0.740	0.410	-0.277	0.750	-0.493
0.900	-0.140	0.320	-0.730	0.430	-0.308	0.800	-0.952
0.960	-0.054	0.340	-0.769	0.440	-0.260	0.830	-0.930
		0.350	-0.323**	0.460	-0.278	0.900	-0.221
		0.370	-0.281	0.490	-0.231	0.960	-0.148
		0.380	-0.241	0.500	-0.296		
		0.400	-0.141	0.520	-0.278		
		0.410	-0.229	0.540	-0.301		
		0.430	-0.198	0.550	-0.281		
		0.440	-0.134	0.580	-0.287		
		0.460	-0.301	0.600	-0.335		
		0.470	-0.184	0.610	-0.226		
		0.490	-0.246	0.650	-1.769**		
		0.500	-0.253	0.700	-0.549		
		0.520	-0.269	0.750	-0.591		
		0.530	-0.250	0.820	-0.891		
		0.550	-0.311	0.890	-0.193		
		0.560	-0.285	0.900	-0.177		
		0.580	-0.269	0.960	-0.133		
		0.590	-0.337				
		0.600	-0.364				
		0.640	-1.601**				
		0.700	-0.501				
		0.750	-0.622				
		0.820	-1.782**				
		0.870	-0.426				
		0.930	-0.180				
		0.960	-0.127				
			Lower Surface				
0.020	-0.791	0.020	0.147	0.020	-0.797	0.020	-0.062**
0.110	-0.180	0.060	-0.099	0.060	-0.019	0.060	2.009**
0.230	-0.014	0.090	-0.156	0.090	-0.129	0.110	-0.153
0.400	-0.003	0.120	-0.116	0.120	-0.482	0.250	-0.178
0.490	-0.019	0.200	0.018	0.200	-0.093	0.400	-0.163
0.630	2.054**	0.260	-0.137	0.250	-0.103	0.490	-0.230
0.750	0.116	0.400	-1.800**	0.400	-0.115	0.580	-0.190
0.850	0.206	0.490	-0.069	0.490	0.022	0.650	-0.003
0.900	0.272	0.580	0.037	0.580	-0.072	0.750	0.247
0.960	0.183	0.640	0.397	0.650	0.160	0.830	0.371
		0.750	0.245	0.750	0.352	0.900	0.462
		0.870	0.307	0.890	********	0.960	0.301
		0.930	0.290	0.930	0.334		
		0.960	0.163	0.960	-1.799**		
CN =	0.379		0.486		0.522		0.486

Table F-2. Continued.

Flight 195, Wing sweep = 26°, Time = 10-48-15-500, MINF = 0.845, Camber = 5/6, ALPT = 7.10, BETA = -0.24, QINF = 287.1, RNPU = 2.3E+06, CNWP = 0.5438

η = 0.93		0.76		0.59		0.40	
			Upper Surface				
x/c	CP	*x/c*	CP	*x/c*	CP	*x/c*	CP
0.020	0.024	0.000	0.845**	0.000	-4.733**	0.010	-0.773
0.060	-0.248	0.020	-0.353	0.020	-0.179	0.020	-0.566
0.110	-0.357	0.040	-0.197	0.060	-0.931**	0.060	-0.825
0.200	-0.896	0.060	-0.471	0.090	-0.654	0.110	-0.977
0.230	-0.809	0.090	-0.504	0.110	-0.801	0.140	1.994**
0.400	-0.681	0.130	-0.682	0.130	-0.846	0.190	-4.594**
0.490	-0.321	0.150	-0.844	0.150	-0.923	0.250	-1.096
0.590	-0.239	0.200	-0.833	0.210	-1.009	0.400	-0.785
0.630	-0.276	0.250	-1.007	0.250	-0.972	0.490	-0.600
0.700	-0.294	0.260	-0.879	0.340	-1.028	0.580	-0.518
0.750	-0.674	0.280	-0.973	0.370	-1.012	0.650	-0.518
0.810	-0.740	0.290	-0.968	0.400	-1.006	0.700	-0.550
0.840	-0.665	0.310	-0.889	0.410	-0.979	0.750	-0.623
0.900	-0.209	0.320	-0.888	0.430	-1.040	0.800	-0.665
0.960	-0.128	0.340	-0.944	0.440	-0.976	0.830	-0.499
		0.350	-0.392**	0.460	-1.007	0.900	-0.179
		0.370	-0.892	0.490	-0.933	0.960	-0.125
		0.380	-0.919	0.500	-1.040		
		0.400	-0.855	0.520	-1.004		
		0.410	-0.962	0.540	-1.034		
		0.430	-0.918	0.550	-0.982		
		0.440	-0.827	0.580	-0.777		
		0.460	-1.056	0.600	-0.644		
		0.470	-0.955	0.610	-0.480		
		0.490	-0.902	0.650	-1.748**		
		0.500	-0.902	0.700	-0.586		
		0.520	-0.908	0.750	-0.568		
		0.530	-0.872	0.820	-0.347		
		0.550	-0.884	0.890	-0.090		
		0.560	-0.926	0.900	-0.072		
		0.580	-0.874	0.960	-0.052		
		0.590	-0.884				
		0.600	-0.968				
		0.640	-1.580**				
		0.700	-0.261				
		0.750	-0.464				
		0.820	-1.761**				
		0.870	-0.306				
		0.930	-0.085				
		0.960	-0.024				
			Lower Surface				
0.020	-0.464	0.020	0.196	0.020	-0.088	0.020	0.254**
0.110	-0.122	0.060	0.102	0.060	0.169	0.060	2.034**
0.230	0.069	0.090	0.008	0.090	0.052	0.110	0.019
0.400	0.012	0.120	0.031	0.120	-0.315	0.250	-0.058
0.490	0.012	0.200	0.094	0.200	-0.028	0.400	-0.064
0.630	2.079**	0.260	-0.053	0.250	0.012	0.490	-0.152
0.750	0.115	0.400	-1.779**	0.400	-0.039	0.580	-0.135
0.850	0.197	0.490	-0.022	0.490	0.060	0.650	0.032
0.900	0.261	0.580	0.067	0.580	-0.019	0.750	0.270
0.960	0.150	0.640	0.426	0.650	0.190	0.830	0.399
		0.750	0.269	0.750	0.376	0.900	0.486
		0.870	0.330	0.890	********	0.960	0.318
		0.930	0.328	0.930	0.357		
		0.960	0.209	0.960	-1.778**		
CN =	0.517		0.741		0.769		0.723

Table F-2. Continued.

Flight 195, Wing sweep = 26°, Time = 10-48-31-500, MINF = 0.847, Camber = 5/6, ALPT = 8.17, BETA = 0.52, QINF = 278.1, RNPU = 2.2E+06, CNWP = 0.6261

η = 0.93		0.76		0.59		0.40	
			Upper Surface				
x/c	CP	*x/c*	CP	*x/c*	CP	*x/c*	CP
0.020	-0.117	0.000	0.910**	0.000	-4.812**	0.010	-0.855
0.060	-0.395	0.020	-0.540	0.020	-0.329	0.020	-0.790
0.110	-0.504	0.040	-0.274	0.060	-1.005**	0.060	-0.864
0.200	-0.916	0.060	-0.592	0.090	-0.777	0.110	-1.062
0.230	-0.825	0.090	-0.669	0.110	-0.894	0.140	2.069**
0.400	-0.778	0.130	-0.770	0.130	-0.943	0.190	-4.669**
0.490	-0.666	0.150	-0.903	0.150	-1.005	0.250	-1.197
0.590	-0.464	0.200	-0.885	0.210	-1.098	0.400	-0.866
0.630	-0.270	0.250	-1.072	0.250	-1.048	0.490	-0.792
0.700	-0.269	0.260	-0.933	0.340	-1.116	0.580	-0.677
0.750	-0.607	0.280	-1.042	0.370	-1.068	0.650	-0.628
0.810	-0.667	0.290	-1.042	0.400	-1.066	0.700	-0.687
0.840	-0.631	0.310	-0.954	0.410	-1.042	0.750	-0.735
0.900	-0.268	0.320	-0.944	0.430	-1.129	0.800	-0.483
0.960	-0.168	0.340	-1.001	0.440	-1.064	0.830	-0.364
		0.350	-0.394**	0.460	-1.084	0.900	-0.219
		0.370	-0.953	0.490	-1.015	0.960	-0.145
		0.380	-0.991	0.500	-1.110		
		0.400	-0.907	0.520	-1.072		
		0.410	-1.039	0.540	-1.117		
		0.430	-1.017	0.550	-1.069		
		0.440	-0.894	0.580	-1.094		
		0.460	-1.118	0.600	-1.075		
		0.470	-1.003	0.610	-0.983		
		0.490	-0.982	0.650	-1.730**		
		0.500	-1.001	0.700	-0.571		
		0.520	-0.967	0.750	-0.568		
		0.530	-0.941	0.820	-0.280		
		0.550	-0.978	0.890	-0.156		
		0.560	-0.995	0.900	-0.171		
		0.580	-0.941	0.960	-0.142		
		0.590	-0.984				
		0.600	-1.030				
		0.640	-1.557**				
		0.700	-0.365				
		0.750	-0.224				
		0.820	-1.744**				
		0.870	-0.159				
		0.930	-0.163				
		0.960	-0.156				
			Lower Surface				
0.020	-0.240	0.020	0.224	0.020	0.072	0.020	0.382**
0.110	-0.065	0.060	0.192	0.060	0.271	0.060	2.173**
0.230	0.102	0.090	0.083	0.090	0.145	0.110	0.081
0.400	0.023	0.120	0.099	0.120	-0.249	0.250	0.009
0.490	-0.016	0.200	0.143	0.200	0.011	0.400	-0.015
0.630	2.220**	0.260	-0.009	0.250	0.063	0.490	-0.130
0.750	0.117	0.400	-1.763**	0.400	-0.013	0.580	-0.122
0.850	0.170	0.490	-0.012	0.490	0.136	0.650	0.044
0.900	0.254	0.580	0.073	0.580	-0.024	0.750	0.300
0.960	0.153	0.640	0.425	0.650	0.176	0.830	0.413
		0.750	0.261	0.750	0.383	0.900	0.490
		0.870	0.322	0.890	********	0.960	0.333
		0.930	0.291	0.930	0.347		
		0.960	0.156	0.960	-1.761**		
CN =	0.604		0.789		0.885		0.834

Table F-2. Continued.

Flight 195, Wing sweep = 26°, Time = 10-49-27-500, MINF = 0.855, Camber = 5/6, ALPT = 8.02, BETA = 0.05, QINF = 290.0, RNPU = 2.3E+06, CNWP = 0.5841

η = 0.93		0.76		0.59		0.40	
			Upper Surface				
x/c	CP	*x/c*	CP	*x/c*	CP	*x/c*	CP
0.020	-0.085	0.000	0.889**	0.000	-4.657**	0.010	-0.833
0.060	-0.363	0.020	-0.491	0.020	-0.271	0.020	-0.749
0.110	-0.427	0.040	-0.250	0.060	-0.951**	0.060	-0.820
0.200	-0.876	0.060	-0.565	0.090	-0.737	0.110	-1.031
0.230	-0.785	0.090	-0.619	0.110	-0.870	0.140	1.971**
0.400	-0.767	0.130	-0.731	0.130	-0.890	0.190	-4.520**
0.490	-0.667	0.150	-0.871	0.150	-0.959	0.250	-1.162
0.590	-0.582	0.200	-0.856	0.210	-1.051	0.400	-0.837
0.630	-0.269	0.250	-1.026	0.250	-1.014	0.490	-0.773
0.700	-0.252	0.260	-0.901	0.340	-1.084	0.580	-0.652
0.750	-0.548	0.280	-0.994	0.370	-1.053	0.650	-0.607
0.810	-0.613	0.290	-1.007	0.400	-1.028	0.700	-0.646
0.840	-0.583	0.310	-0.925	0.410	-1.028	0.750	-0.718
0.900	-0.267	0.320	-0.923	0.430	-1.080	0.800	-0.558
0.960	-0.145	0.340	-0.974	0.440	-1.023	0.830	-0.401
		0.350	-0.396**	0.460	-1.065	0.900	-0.256
		0.370	-0.927	0.490	-0.972	0.960	-0.199
		0.380	-0.955	0.500	-1.077		
		0.400	-0.883	0.520	-1.041		
		0.410	-0.998	0.540	-1.070		
		0.430	-0.973	0.550	-1.051		
		0.440	-0.870	0.580	-1.017		
		0.460	-1.098	0.600	-1.044		
		0.470	-0.968	0.610	-0.941		
		0.490	-0.951	0.650	-1.703**		
		0.500	-0.956	0.700	-0.701		
		0.520	-0.941	0.750	-0.580		
		0.530	-0.920	0.820	-0.234		
		0.550	-0.951	0.890	-0.159		
		0.560	-0.965	0.900	-0.161		
		0.580	-0.929	0.960	-0.153		
		0.590	-0.961				
		0.600	-1.007				
		0.640	-1.536**				
		0.700	-0.348				
		0.750	-0.209				
		0.820	-1.716**				
		0.870	-0.184				
		0.930	-0.162				
		0.960	-0.152				
			Lower Surface				
0.020	-0.291	0.020	0.202	0.020	0.040	0.020	0.368**
0.110	-0.089	0.060	0.156	0.060	0.247	0.060	2.040**
0.230	0.096	0.090	0.060	0.090	0.121	0.110	0.079
0.400	0.001	0.120	0.074	0.120	-0.261	0.250	-0.012
0.490	-0.029	0.200	0.124	0.200	0.005	0.400	-0.036
0.630	2.085**	0.260	-0.025	0.250	0.039	0.490	-0.138
0.750	0.099	0.400	-1.734**	0.400	-0.021	0.580	-0.126
0.850	0.173	0.490	-0.025	0.490	0.041	0.650	0.037
0.900	0.239	0.580	0.049	0.580	-0.022	0.750	0.284
0.960	0.159	0.640	0.403	0.650	0.178	0.830	0.405
		0.750	0.237	0.750	0.369	0.900	0.490
		0.870	0.295	0.890	********	0.960	0.318
		0.930	0.292	0.930	0.327		
		0.960	0.143	0.960	-1.732**		
CN =	0.572		0.749		0.850		0.810

Table F-2. Continued.

Flight 195, Wing sweep = 26°, Time = 10-49-47-000, MINF = 0.860, Camber = 5/6, ALPT = 11.79, BETA = 0.15, QINF = 305.2, RNPU = 2.4E+06, CNWP = 0.4523

η = 0.93		0.76		0.59		0.40	
			Upper Surface				
x/c	CP	*x/c*	CP	*x/c*	CP	*x/c*	CP
0.020	-0.741	0.000	0.808**	0.000	-4.502**	0.010	-1.086
0.060	-0.729	0.020	-1.076	0.020	-0.836	0.020	-1.109
0.110	-0.799	0.040	-0.669	0.060	-1.159**	0.060	-1.183
0.200	-1.042	0.060	-0.874	0.090	-1.030	0.110	-1.299
0.230	-1.006	0.090	-0.960	0.110	-1.159	0.140	1.857**
0.400	-0.990	0.130	-1.035	0.130	-1.168	0.190	-4.372**
0.490	-0.902	0.150	-1.135	0.150	-1.177	0.250	-0.995
0.590	-0.825	0.200	-1.099	0.210	-1.040	0.400	-0.853
0.630	-0.539	0.250	-1.261	0.250	-0.850	0.490	-0.804
0.700	-0.283	0.260	-1.121	0.340	-0.852	0.580	-0.748
0.750	-0.379	0.280	-1.204	0.370	-0.797	0.650	-0.615
0.810	-0.460	0.290	-1.224	0.400	-0.774	0.700	-0.691
0.840	-0.455	0.310	-1.123	0.410	-0.743	0.750	-0.643
0.900	-0.260	0.320	-1.100	0.430	-0.788	0.800	-0.625
0.960	-0.305	0.340	-1.169	0.440	-0.732	0.830	-0.604
		0.350	-0.401**	0.460	-0.723	0.900	-0.563
		0.370	-1.081	0.490	-0.660	0.960	-0.496
		0.380	-1.114	0.500	-0.716		
		0.400	-1.035	0.520	-0.688		
		0.410	-1.159	0.540	-0.665		
		0.430	-1.080	0.550	-0.699		
		0.440	-0.964	0.580	-0.634		
		0.460	-1.083	0.600	-0.624		
		0.470	-0.886	0.610	-0.486		
		0.490	-0.753	0.650	-1.694**		
		0.500	-0.787	0.700	-0.561		
		0.520	-0.682	0.750	-0.612		
		0.530	-0.705	0.820	-0.528		
		0.550	-0.655	0.890	-0.495		
		0.560	-0.670	0.900	-0.463		
		0.580	-0.615	0.960	-0.462		
		0.590	-0.660				
		0.600	-0.639				
		0.640	-1.536**				
		0.700	-0.456				
		0.750	-0.313				
		0.820	-1.706**				
		0.870	-0.256				
		0.930	-0.295				
		0.960	-0.278				
			Lower Surface				
0.020	0.100	0.020	0.201	0.020	0.434	0.020	0.697**
0.110	0.058	0.060	0.385	0.060	0.452	0.060	1.864**
0.230	0.192	0.090	0.277	0.090	0.346	0.110	0.266
0.400	0.019	0.120	0.227	0.120	-0.056	0.250	0.138
0.490	-0.039	0.200	0.220	0.200	0.101	0.400	0.071
0.630	1.906**	0.260	0.086	0.250	0.193	0.490	-0.040
0.750	0.042	0.400	-1.723**	0.400	0.060	0.580	-0.063
0.850	0.104	0.490	0.013	0.490	0.032	0.650	0.067
0.900	0.172	0.580	0.236	0.580	0.004	0.750	0.286
0.960	0.038	0.640	0.382	0.650	0.173	0.830	0.390
		0.750	0.236	0.750	0.354	0.900	0.468
		0.870	0.277	0.890	********	0.960	0.272
		0.930	0.231	0.930	0.262		
		0.960	0.071	0.960	-1.722**		
CN =	0.733		0.882		0.867		0.957

Table F-2. Continued.

Flight 195, Wing sweep = 26°, Time = 10-49-52-500, MINF = 0.852, Camber = 5/6, ALPT = 11.09, BETA = -0.27, QINF = 304.9, RNPU = 2.4E+06, CNWP = 0.4524

η = 0.93		0.76		0.59		0.40	
			Upper Surface				
x/c	CP	*x/c*	CP	*x/c*	CP	*x/c*	CP
0.020	-0.716	0.000	0.820**	0.000	-4.539**	0.010	-1.035
0.060	-0.710	0.020	-1.067	0.020	-0.840	0.020	-1.079
0.110	-0.745	0.040	-0.684	0.060	-1.112**	0.060	-1.188
0.200	-1.032	0.060	-0.849	0.090	-1.004	0.110	-1.295
0.230	-0.997	0.090	-0.924	0.110	-1.164	0.140	1.870**
0.400	-0.987	0.130	-1.012	0.130	-1.173	0.190	-4.409**
0.490	-0.760	0.150	-1.126	0.150	-1.209	0.250	-1.056
0.590	-0.269	0.200	-1.104	0.210	-1.280	0.400	-0.836
0.630	-0.230	0.250	-1.238	0.250	-1.125	0.490	-0.813
0.700	-0.262	0.260	-1.112	0.340	-0.797	0.580	-0.728
0.750	-0.500	0.280	-1.221	0.370	-0.740	0.650	-0.614
0.810	-0.577	0.290	-1.219	0.400	-0.735	0.700	-0.670
0.840	-0.556	0.310	-1.145	0.410	-0.703	0.750	-0.619
0.900	-0.269	0.320	-1.121	0.430	-0.733	0.800	-0.587
0.960	-0.215	0.340	-1.187	0.440	-0.681	0.830	-0.585
		0.350	-0.395**	0.460	-0.686	0.900	-0.489
		0.370	-1.103	0.490	-0.621	0.960	-0.405
		0.380	-1.113	0.500	-0.687		
		0.400	-1.004	0.520	-0.669		
		0.410	-1.067	0.540	-0.669		
		0.430	-0.919	0.550	-0.616		
		0.440	-0.821	0.580	-0.624		
		0.460	-0.943	0.600	-0.626		
		0.470	-0.774	0.610	-0.517		
		0.490	-0.697	0.650	-1.728**		
		0.500	-0.672	0.700	-0.509		
		0.520	-0.664	0.750	-0.613		
		0.530	-0.614	0.820	-0.473		
		0.550	-0.636	0.890	-0.403		
		0.560	-0.580	0.900	-0.409		
		0.580	-0.579	0.960	-0.377		
		0.590	-0.575				
		0.600	-0.585				
		0.640	-1.570**				
		0.700	-0.446				
		0.750	-0.316				
		0.820	-1.740**				
		0.870	-0.242				
		0.930	-0.267				
		0.960	-0.286				
			Lower Surface				
0.020	0.063	0.020	0.212	0.020	0.368	0.020	0.671**
0.110	0.034	0.060	0.360	0.060	0.437	0.060	1.833**
0.230	0.188	0.090	0.247	0.090	0.315	0.110	0.242
0.400	0.023	0.120	0.224	0.120	-0.071	0.250	0.119
0.490	-0.032	0.200	0.217	0.200	0.098	0.400	0.059
0.630	1.876**	0.260	0.076	0.250	0.168	0.490	-0.051
0.750	0.045	0.400	-1.757**	0.400	0.047	0.580	-0.068
0.850	0.115	0.490	0.002	0.490	0.046	0.650	0.056
0.900	0.178	0.580	0.215	0.580	0.001	0.750	0.287
0.960	0.061	0.640	0.394	0.650	0.162	0.830	0.392
		0.750	0.233	0.750	0.343	0.900	0.467
		0.870	0.288	0.890	********	0.960	0.266
		0.930	0.227	0.930	0.273		
		0.960	0.078	0.960	-1.756**		
CN =	0.670		0.856		0.857		0.938

Table F-2. Continued.

Flight 191, Wing sweep = 26°, Time = 9-46-5-000, MINF = 0.850, Camber = 5/6, ALPT = 4.95, BETA = -0.16, QINF = 286.4, RNPU = 2.3E+06, CNWP = 0.4005

η = 0.93		0.76		0.59		0.40	
			Upper Surface				
x/c	CP	*x/c*	CP	*x/c*	CP	*x/c*	CP
0.020	0.289	0.000	0.662	0.000	-5.039**	0.010	-0.253
0.060	-0.036	0.020	-0.040	0.020	0.164	0.020	-0.145
0.110	-0.304	0.040	0.069	0.060	-0.102**	0.060	-0.570
0.200	-0.772	0.060	-0.212	0.090	-0.345	0.110	-0.685
0.230	-0.666	0.090	-0.335	0.110	-0.586	0.140	-0.862
0.400	-0.175	0.130	-0.489	0.130	-0.648	0.190	-5.721**
0.490	-0.198	0.150	-0.705	0.150	-0.781	0.250	-0.595
0.590	-0.274	0.200	-0.692	0.210	-0.829	0.400	-0.330
0.630	-0.311	0.250	-0.833**	0.250	-0.776	0.490	-0.364
0.700	-0.364	0.260	-0.689	0.340	-0.818	0.580	-0.356
0.750	-0.711	0.280	-0.771	0.370	-0.673	0.650	-0.407
0.810	-0.772	0.290	-0.769	0.400	-0.420	0.700	-0.415
0.840	-0.716	0.310	-0.720	0.410	-0.276	0.750	-0.509
0.900	-0.116	0.320	-0.694	0.430	-0.299	0.800	-0.928
0.960	-0.050	0.340	-0.728	0.440	-0.251	0.830	-0.892
		0.350	-0.374**	0.460	-0.274	0.900	-0.248
		0.370	-0.656	0.490	-0.207	0.960	-0.184
		0.380	-0.381	0.500	-0.289		
		0.400	-0.171	0.520	-0.250		
		0.410	-0.234	0.540	-0.235		
		0.430	-0.181	0.550	-0.263		
		0.440	-0.135	0.580	-0.259		
		0.460	-0.231	0.600	-0.273		
		0.470	-0.191	0.610	-0.219		
		0.490	-0.205	0.650	-2.859**		
		0.500	-0.195	0.700	-0.535		
		0.520	-0.229	0.750	-0.600		
		0.530	-0.221	0.820	-0.875		
		0.550	-0.257	0.890	-0.209		
		0.560	-0.248	0.900	-0.217		
		0.580	-0.243	0.960	-0.171		
		0.590	-0.292				
		0.600	-0.352				
		0.640	-2.690**				
		0.700	-0.479				
		0.750	-0.578				
		0.820	-2.872**				
		0.870	-0.438				
		0.930	-0.188				
		0.960	-0.150				
			Lower Surface				
0.020	-0.943	0.020	-1.093	0.020	-0.954	0.020	-0.097
0.110	-0.172	0.060	-0.122	0.060	-0.054	0.060	3.126**
0.230	-0.017	0.090	-0.194	0.090	-0.162	0.110	-0.150
0.400	-0.030	0.120	-0.112	0.120	-0.513**	0.250	-0.202
0.490	-0.030	0.200	-0.004	0.200	-0.122	0.400	-0.186
0.630	3.152**	0.260	-0.155	0.250	-0.130	0.490	-0.276
0.750	0.121	0.400	-2.890**	0.400	-0.112	0.580	-0.193
0.850	0.192	0.490	-0.072	0.490	0.034	0.650	-0.002
0.900	0.277	0.580	0.030	0.580	-0.080	0.750	0.240
0.960	0.185	0.640	0.400	0.650	0.168	0.830	0.394
		0.750	0.239	0.750	0.347	0.900	0.469
		0.870	0.310	0.890	********	0.960	0.313
		0.930	0.280	0.930	0.328		
		0.960	0.172	0.960	-2.617**		
CN =	0.370		0.468		0.524		0.458

Table F-2. Continued.

Flight 191, Wing sweep = 26°, Time = 9-46-15-500, MINF = 0.852, Camber = 5/6, ALPT = 7.04, BETA = -0.16, QINF = 290.9, RNPU = 2.3E+06, CNWP = 0.5409

η = 0.93		0.76		0.59		0.40	
			Upper Surface				
x/c	CP	*x/c*	CP	*x/c*	CP	*x/c*	CP
0.020	0.063	0.000	0.846	0.000	-4.985**	0.010	-0.728
0.060	-0.187	0.020	-0.338	0.020	-0.136	0.020	-0.427
0.110	-0.373	0.040	-0.145	0.060	-0.280**	0.060	-0.769
0.200	-0.846	0.060	-0.411	0.090	-0.590	0.110	-0.933
0.230	-0.846	0.090	-0.462	0.110	-0.762	0.140	-1.060
0.400	-0.681	0.130	-0.621	0.130	-0.794	0.190	-5.657**
0.490	-0.555	0.150	-0.805	0.150	-0.894	0.250	-1.061
0.590	-0.249	0.200	-0.797	0.210	-0.957	0.400	-0.741
0.630	-0.266	0.250	-0.976**	0.250	-0.916	0.490	-0.631
0.700	-0.258	0.260	-0.841	0.340	-0.976	0.580	-0.504
0.750	-0.647	0.280	-0.933	0.370	-0.951	0.650	-0.485
0.810	-0.693	0.290	-0.936	0.400	-0.979	0.700	-0.530
0.840	-0.630	0.310	-0.867	0.410	-0.927	0.750	-0.605
0.900	-0.205	0.320	-0.846	0.430	-0.988	0.800	-0.857
0.960	-0.114	0.340	-0.898	0.440	-0.950	0.830	-0.512
		0.350	-0.396**	0.460	-0.979	0.900	-0.209
		0.370	-0.860	0.490	-0.922	0.960	-0.184
		0.380	-0.884	0.500	-1.006		
		0.400	-0.797	0.520	-0.937		
		0.410	-0.925	0.540	-0.972		
		0.430	-0.891	0.550	-0.965		
		0.440	-0.810	0.580	-0.912		
		0.460	-0.965	0.600	-0.789		
		0.470	-0.878	0.610	-0.591		
		0.490	-0.863	0.650	-2.839**		
		0.500	-0.871	0.700	-0.609		
		0.520	-0.866	0.750	-0.707		
		0.530	-0.841	0.820	-0.257		
		0.550	-0.872	0.890	-0.110		
		0.560	-0.865	0.900	-0.102		
		0.580	-0.844	0.960	-0.083		
		0.590	-0.877				
		0.600	-0.939				
		0.640	-2.673**				
		0.700	-0.436				
		0.750	-0.326				
		0.820	-2.852**				
		0.870	-0.267				
		0.930	-0.063				
		0.960	0.001				
			Lower Surface				
0.020	-0.458	0.020	-0.194	0.020	-0.096	0.020	0.245
0.110	-0.130	0.060	0.073	0.060	0.178	0.060	3.053**
0.230	0.062	0.090	-0.010	0.090	0.047	0.110	0.031
0.400	0.010	0.120	0.025	0.120	-0.320**	0.250	-0.059
0.490	-0.013	0.200	0.061	0.200	-0.040	0.400	-0.087
0.630	3.078**	0.260	-0.050	0.250	0.003	0.490	-0.175
0.750	0.132	0.400	-2.870**	0.400	-0.027	0.580	-0.137
0.850	0.193	0.490	-0.019	0.490	0.016	0.650	0.034
0.900	0.279	0.580	0.069	0.580	-0.028	0.750	0.282
0.960	0.177	0.640	0.427	0.650	0.201	0.830	0.420
		0.750	0.290	0.750	0.385	0.900	0.489
		0.870	0.354	0.890	********	0.960	0.326
		0.930	0.341	0.930	0.355		
		0.960	0.231	0.960	-2.602**		
CN =	0.527		0.715		0.775		0.724

Table F-2. Continued.

Flight 198, Wing sweep = 26°, Time = 13-51-33-500, MINF = 0.858, Camber = 5/10, ALPT = 3.98, BETA = 0.28, QINF = 299.9, RNPU = 2.3E+06, CNWP = 0.3573

η = 0.93		0.76		0.59		0.40	
			Upper Surface				
x/c	CP	*x/c*	CP	*x/c*	CP	*x/c*	CP
0.020	0.382	0.000	0.609	0.000	-5.643**	0.010	-0.034**
0.060	0.020	0.020	0.174**	0.020	0.311**	0.020	0.006**
0.110	-0.262	0.040	0.177	0.060	-0.992**	0.060	-0.400
0.200	-0.726	0.060	-0.077	0.090	-0.239	0.110	-0.513
0.230	-0.227	0.090	-0.225	0.110	-0.466	0.140	1.920**
0.400	-0.184	0.130	-0.418	0.130	-0.594	0.190	-5.511**
0.490	-0.194	0.150	-0.616	0.150	-0.678	0.250	-0.607
0.590	-0.248	0.200	-0.611	0.210	-0.742	0.400	-0.299
0.630	-0.295	0.250	-0.689	0.250	-0.687	0.490	-0.302
0.700	-0.396	0.260	-0.635	0.340	-0.286	0.580	-0.334
0.750	-0.527	0.280	-0.666	0.370	-0.271	0.650	-0.384
0.810	-0.552	0.290	-0.650	0.400	-0.297	0.700	-0.379
0.840	-0.513	0.310	-0.425	0.410	-0.254	0.750	-0.498
0.900	-0.226	0.320	-0.321	0.430	-0.299	0.800	-1.062
0.960	-0.248	0.340	-0.210	0.440	-0.284	0.830	-0.666
		0.350	-0.138**	0.460	-0.287	0.900	-0.394
		0.370	-0.186	0.490	-0.225	0.960	-0.394
		0.380	-0.198	0.500	-0.283		
		0.400	-0.135	0.520	-0.256		
		0.410	-0.235	0.540	-0.264		
		0.430	-0.241	0.550	-0.258		
		0.440	-0.170	0.580	-0.247		
		0.460	-0.290	0.600	-0.274		
		0.470	-0.282	0.610	-0.219		
		0.490	-0.244	0.650	-2.786**		
		0.500	-0.248	0.700	-0.512		
		0.520	-0.263	0.750	-0.534		
		0.530	-0.257	0.820	-0.732		
		0.550	-0.302	0.890	-0.394		
		0.560	-0.275	0.900	-0.456		
		0.580	-0.254	0.960	-0.431		
		0.590	-0.302				
		0.600	-0.328				
		0.640	-2.625**				
		0.700	-0.480				
		0.750	-0.581				
		0.820	-2.799**				
		0.870	-0.280				
		0.930	-0.294				
		0.960	-0.291				
			Lower Surface				
0.020	-1.392	0.020	-1.208	0.020	-1.097	0.020	-0.274
0.110	-0.108	0.060	-0.454	0.060	-0.193	0.060	3.181**
0.230	-0.033	0.090	-0.183	0.090	-0.230	0.110	-0.237
0.400	0.007	0.120	-0.130	0.120	-0.495	0.250	-0.232
0.490	0.015	0.200	-0.030	0.200	-0.092	0.400	-0.196
0.630	3.224**	0.260	-0.113	0.250	-0.147	0.490	-0.202
0.750	0.194	0.400	-2.816**	0.400	-0.090	0.580	-0.110
0.850	0.255	0.490	-0.017	0.490	0.032	0.650	0.117
0.900	0.307	0.580	0.115	0.580	0.014	0.750	0.364
0.960	0.141	0.640	0.465	0.650	0.280	0.830	0.446
		0.750	0.321	0.750	0.423	0.900	0.551
		0.870	0.369	0.890	********	0.960	0.350
		0.930	0.314	0.930	0.384		
		0.960	0.171	0.960	-2.815**		
CN =	0.346		0.422		0.488		0.453

Table F-2. Continued.

Flight 198, Wing sweep = 26°, Time = 13-51-51-500, MINF = 0.856, Camber = 5/10, ALPT = 5.04, BETA = 0.21, QINF = 298.1, RNPU = 2.3E+06, CNWP = 0.4900

η = 0.93		0.76		0.59		0.40	
			Upper Surface				
x/c	CP	*x/c*	CP	*x/c*	CP	*x/c*	CP
0.020	0.303	0.000	0.698	0.000	-5.672**	0.010	-0.240**
0.060	-0.057	0.020	0.084**	0.020	0.173**	0.020	-0.136**
0.110	-0.245	0.040	0.083	0.060	-1.024**	0.060	-0.566
0.200	-0.789	0.060	-0.179	0.090	-0.318	0.110	-0.648
0.230	-0.616	0.090	-0.289	0.110	-0.530	0.140	1.929**
0.400	-0.121	0.130	-0.471	0.130	-0.649	0.190	-5.538**
0.490	-0.166	0.150	-0.658	0.150	-0.751	0.250	-0.661
0.590	-0.242	0.200	-0.669	0.210	-0.816	0.400	-0.377
0.630	-0.290	0.250	-0.791	0.250	-0.780	0.490	-0.373
0.700	-0.388	0.260	-0.714	0.340	-0.816	0.580	-0.360
0.750	-0.792	0.280	-0.762	0.370	-0.805	0.650	-0.419
0.810	-0.760	0.290	-0.765	0.400	-0.797	0.700	-0.407
0.840	-0.705	0.310	-0.702	0.410	-0.665	0.750	-0.502
0.900	-0.260	0.320	-0.690	0.430	-0.496	0.800	-0.933
0.960	-0.293	0.340	-0.731	0.440	-0.381	0.830	-0.542
		0.350	-0.320**	0.460	-0.330	0.900	-0.371
		0.370	-0.693	0.490	-0.257	0.960	-0.374
		0.380	-0.702	0.500	-0.268		
		0.400	-0.621	0.520	-0.250		
		0.410	-0.713	0.540	-0.245		
		0.430	-0.603	0.550	-0.228		
		0.440	-0.369	0.580	-0.224		
		0.460	-0.273	0.600	-0.244		
		0.470	-0.127	0.610	-0.200		
		0.490	-0.149	0.650	-2.797**		
		0.500	-0.134	0.700	-0.476		
		0.520	-0.142	0.750	-0.505		
		0.530	-0.142	0.820	-0.925		
		0.550	-0.165	0.890	-0.386		
		0.560	-0.170	0.900	-0.444		
		0.580	-0.163	0.960	-0.423		
		0.590	-0.222				
		0.600	-0.265				
		0.640	-2.634**				
		0.700	-0.425				
		0.750	-0.679				
		0.820	-2.809**				
		0.870	-0.275				
		0.930	-0.285				
		0.960	-0.293				
			Lower Surface				
0.020	-0.882	0.020	-0.989	0.020	-0.877	0.020	-0.058
0.110	-0.149	0.060	-0.108	0.060	-0.014	0.060	3.207**
0.230	0.012	0.090	-0.121	0.090	-0.101	0.110	-0.109
0.400	0.007	0.120	-0.065	0.120	-0.413	0.250	-0.160
0.490	0.029	0.200	0.024	0.200	-0.052	0.400	-0.139
0.630	3.251**	0.260	-0.070	0.250	-0.089	0.490	-0.166
0.750	0.198	0.400	-2.827**	0.400	-0.053	0.580	-0.083
0.850	0.270	0.490	0.016	0.490	0.050	0.650	0.136
0.900	0.315	0.580	0.126	0.580	0.032	0.750	0.373
0.960	0.140	0.640	0.480	0.650	0.299	0.830	0.470
		0.750	0.338	0.750	0.447	0.900	0.555
		0.870	0.433	0.890	********	0.960	0.368
		0.930	0.359	0.930	0.416		
		0.960	0.201	0.960	-2.825**		
CN =	0.418		0.549		0.625		0.533

Table F-2. Continued.

Flight 198, Wing sweep = 26°, Time = 13-52-32-500, MINF = 0.856, Camber = 5/10, ALPT = 5.96, BETA = 0.02, QINF = 297.6, RNPU = 2.3E+06, CNWP = 0.4975

η = 0.93		0.76		0.59		0.40	
			Upper Surface				
x/c	CP	*x/c*	CP	*x/c*	CP	*x/c*	CP
0.020	0.218	0.000	0.755	0.000	-5.679**	0.010	-0.366**
0.060	-0.065	0.020	-0.032**	0.020	0.045**	0.020	-0.198**
0.110	-0.336	0.040	0.005	0.060	-1.082**	0.060	-0.660
0.200	-0.828	0.060	-0.255	0.090	-0.380	0.110	-0.767
0.230	-0.690	0.090	-0.358	0.110	-0.593	0.140	1.927**
0.400	-0.523	0.130	-0.529	0.130	-0.703	0.190	-5.545**
0.490	-0.168	0.150	-0.713	0.150	-0.801	0.250	-0.959
0.590	-0.218	0.200	-0.723	0.210	-0.872	0.400	-0.663
0.630	-0.273	0.250	-0.856	0.250	-0.846	0.490	-0.439
0.700	-0.298	0.260	-0.782	0.340	-0.901	0.580	-0.423
0.750	-0.907	0.280	-0.833	0.370	-0.884	0.650	-0.449
0.810	-0.961	0.290	-0.846	0.400	-0.870	0.700	-0.464
0.840	-0.922	0.310	-0.774	0.410	-0.837	0.750	-0.560
0.900	-0.302	0.320	-0.768	0.430	-0.882	0.800	-0.630
0.960	-0.341	0.340	-0.808	0.440	-0.861	0.830	-0.475
		0.350	-0.344**	0.460	-0.870	0.900	-0.360
		0.370	-0.776	0.490	-0.784	0.960	-0.364
		0.380	-0.795	0.500	-0.720		
		0.400	-0.707	0.520	-0.510		
		0.410	-0.800	0.540	-0.439		
		0.430	-0.781	0.550	-0.389		
		0.440	-0.714	0.580	-0.346		
		0.460	-0.852	0.600	-0.353		
		0.470	-0.793	0.610	-0.283		
		0.490	-0.764	0.650	-2.799**		
		0.500	-0.738	0.700	-0.507		
		0.520	-0.756	0.750	-0.519		
		0.530	-0.740	0.820	-0.596		
		0.550	-0.757	0.890	-0.296		
		0.560	-0.614	0.900	-0.328		
		0.580	-0.320	0.960	-0.341		
		0.590	-0.251				
		0.600	-0.229				
		0.640	-2.637**				
		0.700	-0.302				
		0.750	-0.689				
		0.820	-2.812**				
		0.870	-0.363				
		0.930	-0.258				
		0.960	-0.262				
			Lower Surface				
0.020	-0.589	0.020	-0.560	0.020	-0.276	0.020	0.072
0.110	-0.144	0.060	-0.009	0.060	0.067	0.060	3.214**
0.230	0.029	0.090	-0.048	0.090	-0.021	0.110	-0.046
0.400	0.016	0.120	-0.025	0.120	-0.341	0.250	-0.112
0.490	0.024	0.200	0.041	0.200	-0.023	0.400	-0.101
0.630	3.258**	0.260	-0.046	0.250	-0.043	0.490	-0.134
0.750	0.196	0.400	-2.829**	0.400	-0.020	0.580	-0.071
0.850	0.265	0.490	0.018	0.490	0.056	0.650	0.142
0.900	0.310	0.580	0.125	0.580	0.038	0.750	0.381
0.960	0.126	0.640	0.486	0.650	0.302	0.830	0.482
		0.750	0.341	0.750	0.450	0.900	0.579
		0.870	0.455	0.890	********	0.960	0.370
		0.930	0.351	0.930	0.419		
		0.960	0.207	0.960	-2.828**		
CN =	0.517		0.667		0.707		0.660

Table F-2. Continued.

Flight 198, Wing sweep = 26°, Time = 13-52-35-500, MINF = 0.856, Camber = 5/10, ALPT = 7.04, BETA = 0.05, QINF = 297.4, RNPU = 2.3E+06, CNWP = 0.5942

η = 0.93		0.76		0.59		0.40	
			Upper Surface				
x/c	CP	*x/c*	CP	*x/c*	CP	*x/c*	CP
0.020	0.106	0.000	0.844	0.000	-5.683**	0.010	-0.649**
0.060	-0.190	0.020	-0.213**	0.020	-0.104**	0.020	-0.290**
0.110	-0.355	0.040	-0.110	0.060	-1.139**	0.060	-0.763
0.200	-0.866	0.060	-0.365	0.090	-0.556	0.110	-0.892
0.230	-0.751	0.090	-0.431	0.110	-0.688	0.140	1.931**
0.400	-0.653	0.130	-0.607	0.130	-0.768	0.190	-5.549**
0.490	-0.544	0.150	-0.759	0.150	-0.854	0.250	-1.031
0.590	-0.371	0.200	-0.770	0.210	-0.925	0.400	-0.732
0.630	-0.312	0.250	-0.921	0.250	-0.912	0.490	-0.586
0.700	-0.369	0.260	-0.836	0.340	-0.949	0.580	-0.504
0.750	-0.854	0.280	-0.909	0.370	-0.957	0.650	-0.488
0.810	-0.923	0.290	-0.904	0.400	-0.944	0.700	-0.519
0.840	-0.885	0.310	-0.833	0.410	-0.917	0.750	-0.597
0.900	-0.341	0.320	-0.819	0.430	-0.976	0.800	-0.587
0.960	-0.383	0.340	-0.878	0.440	-0.931	0.830	-0.442
		0.350	-0.340**	0.460	-0.951	0.900	-0.355
		0.370	-0.842	0.490	-0.881	0.960	-0.358
		0.380	-0.858	0.500	-0.978		
		0.400	-0.770	0.520	-0.966		
		0.410	-0.874	0.540	-0.965		
		0.430	-0.862	0.550	-0.936		
		0.440	-0.792	0.580	-0.897		
		0.460	-0.923	0.600	-0.825		
		0.470	-0.864	0.610	-0.635		
		0.490	-0.835	0.650	-2.801**		
		0.500	-0.837	0.700	-0.572		
		0.520	-0.857	0.750	-0.646		
		0.530	-0.816	0.820	-0.318		
		0.550	-0.841	0.890	-0.245		
		0.560	-0.844	0.900	-0.262		
		0.580	-0.812	0.960	-0.272		
		0.590	-0.833				
		0.600	-0.893				
		0.640	-2.638**				
		0.700	-0.904				
		0.750	-0.356				
		0.820	-2.814**				
		0.870	-0.194				
		0.930	-0.206				
		0.960	-0.196				
			Lower Surface				
0.020	-0.362	0.020	-0.203	0.020	-0.088	0.020	0.251
0.110	-0.106	0.060	0.084	0.060	0.175	0.060	3.216**
0.230	0.074	0.090	0.032	0.090	0.077	0.110	0.051
0.400	0.031	0.120	0.042	0.120	-0.257	0.250	-0.037
0.490	0.024	0.200	0.092	0.200	-0.001	0.400	-0.049
0.630	3.260**	0.260	0.005	0.250	0.024	0.490	-0.097
0.750	0.203	0.400	-2.831**	0.400	0.025	0.580	-0.041
0.850	0.272	0.490	0.044	0.490	0.078	0.650	0.156
0.900	0.316	0.580	0.143	0.580	0.068	0.750	0.405
0.960	0.128	0.640	0.506	0.650	0.313	0.830	0.497
		0.750	0.347	0.750	0.465	0.900	0.585
		0.870	0.442	0.890	********	0.960	0.385
		0.930	0.373	0.930	0.434		
		0.960	0.229	0.960	-2.830**		
CN =	0.622		0.791		0.829		0.761

Table F-2. Continued.

Flight 198, Wing sweep = 26°, Time = 13-53-4-000, MINF = 0.847, Camber = 5/10, ALPT = 7.97, BETA = 0.10, QINF = 293.2, RNPU = 2.3E+06, CNWP = 0.6637

η = 0.93		0.76		0.59		0.40	
			Upper Surface				
x/c	CP	*x/c*	CP	*x/c*	CP	*x/c*	CP
0.020	-0.060	0.000	0.891	0.000	-5.777**	0.010	-0.819**
0.060	-0.372	0.020	-0.397**	0.020	-0.309**	0.020	-0.731**
0.110	-0.426	0.040	-0.250	0.060	-1.278**	0.060	-0.823
0.200	-0.903	0.060	-0.543	0.090	-0.713	0.110	-1.015
0.230	-0.856	0.090	-0.605	0.110	-0.836	0.140	1.974**
0.400	-0.732	0.130	-0.713	0.130	-0.887	0.190	-5.642**
0.490	-0.618	0.150	-0.850	0.150	-0.952	0.250	-1.177
0.590	-0.537	0.200	-0.850	0.210	-1.043	0.400	-0.818
0.630	-0.351	0.250	-0.998	0.250	-1.013	0.490	-0.734
0.700	-0.317	0.260	-0.938	0.340	-1.057	0.580	-0.629
0.750	-0.873	0.280	-0.998	0.370	-1.050	0.650	-0.578
0.810	-0.928	0.290	-1.013	0.400	-1.039	0.700	-0.630
0.840	-0.927	0.310	-0.930	0.410	-1.010	0.750	-0.701
0.900	-0.457	0.320	-0.932	0.430	-1.084	0.800	-0.536
0.960	-0.474	0.340	-0.986	0.440	-1.035	0.830	-0.438
		0.350	-0.365**	0.460	-1.052	0.900	-0.350
		0.370	-0.938	0.490	-0.998	0.960	-0.320
		0.380	-0.960	0.500	-1.070		
		0.400	-0.880	0.520	-1.034		
		0.410	-0.988	0.540	-1.056		
		0.430	-0.983	0.550	-1.034		
		0.440	-0.908	0.580	-1.002		
		0.460	-1.031	0.600	-1.029		
		0.470	-0.988	0.610	-0.958		
		0.490	-0.945	0.650	-2.855**		
		0.500	-0.946	0.700	-0.845		
		0.520	-0.930	0.750	-0.731		
		0.530	-0.915	0.820	-0.305		
		0.550	-0.937	0.890	-0.256		
		0.560	-0.936	0.900	-0.260		
		0.580	-0.902	0.960	-0.263		
		0.590	-0.944				
		0.600	-0.980				
		0.640	-2.690**				
		0.700	-0.410				
		0.750	-0.254				
		0.820	-2.868**				
		0.870	-0.229				
		0.930	-0.257				
		0.960	-0.251				
			Lower Surface				
0.020	-0.272	0.020	-0.011	0.020	0.070	0.020	0.366
0.110	-0.044	0.060	0.166	0.060	0.261	0.060	3.248**
0.230	0.118	0.090	0.108	0.090	0.151	0.110	0.109
0.400	0.017	0.120	0.096	0.120	-0.183	0.250	0.026
0.490	0.032	0.200	0.138	0.200	0.055	0.400	0.003
0.630	3.292**	0.260	0.050	0.250	0.062	0.490	-0.067
0.750	0.176	0.400	-2.885**	0.400	0.036	0.580	-0.015
0.850	0.260	0.490	0.049	0.490	0.080	0.650	0.167
0.900	0.303	0.580	0.142	0.580	0.073	0.750	0.397
0.960	0.116	0.640	0.497	0.650	0.326	0.830	0.511
		0.750	0.355	0.750	0.457	0.900	0.582
		0.870	0.411	0.890	********	0.960	0.373
		0.930	0.342	0.930	0.417		
		0.960	0.195	0.960	-2.884**		
CN =	0.699		0.834		0.952		0.873

Table F-2. Continued.

Flight 198, Wing sweep = 26°, Time = 13-53-6-000, MINF = 0.850, Camber = 5/10, ALPT = 8.01, BETA = 0.26, QINF = 295.9, RNPU = 2.3E+06, CNWP = 0.6712

η = 0.93		0.76		0.59		0.40	
			Upper Surface				
x/c	CP	*x/c*	CP	*x/c*	CP	*x/c*	CP
0.020	-0.033	0.000	0.906	0.000	-5.729**	0.010	-0.790**
0.060	-0.348	0.020	-0.358**	0.020	-0.255**	0.020	-0.686**
0.110	-0.449	0.040	-0.225	0.060	-1.262**	0.060	-0.819
0.200	-0.898	0.060	-0.527	0.090	-0.696	0.110	-0.994
0.230	-0.809	0.090	-0.580	0.110	-0.817	0.140	1.959**
0.400	-0.737	0.130	-0.704	0.130	-0.883	0.190	-5.595**
0.490	-0.635	0.150	-0.827	0.150	-0.922	0.250	-1.156
0.590	-0.559	0.200	-0.840	0.210	-1.022	0.400	-0.807
0.630	-0.379	0.250	-0.992	0.250	-1.000	0.490	-0.731
0.700	-0.318	0.260	-0.912	0.340	-1.052	0.580	-0.612
0.750	-0.835	0.280	-0.984	0.370	-1.030	0.650	-0.576
0.810	-0.916	0.290	-0.988	0.400	-1.026	0.700	-0.628
0.840	-0.885	0.310	-0.919	0.410	-0.997	0.750	-0.699
0.900	-0.451	0.320	-0.909	0.430	-1.063	0.800	-0.542
0.960	-0.473	0.340	-0.963	0.440	-1.029	0.830	-0.451
		0.350	-0.346**	0.460	-1.041	0.900	-0.345
		0.370	-0.915	0.490	-0.955	0.960	-0.323
		0.380	-0.936	0.500	-1.059		
		0.400	-0.861	0.520	-1.029		
		0.410	-0.965	0.540	-1.050		
		0.430	-0.957	0.550	-1.023		
		0.440	-0.880	0.580	-0.961		
		0.460	-1.013	0.600	-1.009		
		0.470	-0.948	0.610	-0.939		
		0.490	-0.925	0.650	-2.833**		
		0.500	-0.927	0.700	-0.867		
		0.520	-0.918	0.750	-0.732		
		0.530	-0.896	0.820	-0.300		
		0.550	-0.923	0.890	-0.251		
		0.560	-0.944	0.900	-0.257		
		0.580	-0.897	0.960	-0.272		
		0.590	-0.924				
		0.600	-0.975				
		0.640	-2.670**				
		0.700	-0.366				
		0.750	-0.255				
		0.820	-2.846**				
		0.870	-0.244				
		0.930	-0.251				
		0.960	-0.248				
			Lower Surface				
0.020	-0.231	0.020	-0.022	0.020	0.066	0.020	0.381
0.110	-0.054	0.060	0.180	0.060	0.269	0.060	3.215**
0.230	0.110	0.090	0.107	0.090	0.161	0.110	0.104
0.400	0.039	0.120	0.114	0.120	-0.168	0.250	0.022
0.490	0.028	0.200	0.133	0.200	0.045	0.400	-0.001
0.630	3.259**	0.260	0.046	0.250	0.069	0.490	-0.056
0.750	0.189	0.400	-2.863**	0.400	0.047	0.580	-0.014
0.850	0.258	0.490	0.060	0.490	0.090	0.650	0.177
0.900	0.299	0.580	0.149	0.580	0.084	0.750	0.419
0.960	0.112	0.640	0.498	0.650	0.327	0.830	0.511
		0.750	0.352	0.750	0.471	0.900	0.594
		0.870	0.437	0.890	********	0.960	0.387
		0.930	0.357	0.930	0.432		
		0.960	0.216	0.960	-2.862**		
CN =	0.697		0.827		0.950		0.868

Table F-2. Continued.

Flight 198, Wing sweep = 26°, Time = 13-53-7-000, MINF = 0.851, Camber = 5/10, ALPT = 8.18, BETA = 0.23, QINF = 297.0, RNPU = 2.3E+06, CNWP = 0.6959

η = 0.93		0.76		0.59		0.40	
			Upper Surface				
x/c	CP	*x/c*	CP	*x/c*	CP	*x/c*	CP
0.020	-0.075	0.000	0.908	0.000	-5.711**	0.010	-0.811**
0.060	-0.349	0.020	-0.437**	0.020	-0.313**	0.020	-0.761**
0.110	-0.450	0.040	-0.249	0.060	-1.248**	0.060	-0.841
0.200	-0.898	0.060	-0.528	0.090	-0.717	0.110	-1.023
0.230	-0.818	0.090	-0.625	0.110	-0.862	0.140	1.943**
0.400	-0.760	0.130	-0.724	0.130	-0.895	0.190	-5.577**
0.490	-0.665	0.150	-0.855	0.150	-0.955	0.250	-1.183
0.590	-0.605	0.200	-0.862	0.210	-1.041	0.400	-0.835
0.630	-0.434	0.250	-1.018	0.250	-1.022	0.490	-0.750
0.700	-0.312	0.260	-0.932	0.340	-1.082	0.580	-0.645
0.750	-0.812	0.280	-0.992	0.370	-1.045	0.650	-0.586
0.810	-0.884	0.290	-1.006	0.400	-1.047	0.700	-0.661
0.840	-0.862	0.310	-0.937	0.410	-1.020	0.750	-0.721
0.900	-0.477	0.320	-0.930	0.430	-1.077	0.800	-0.543
0.960	-0.510	0.340	-0.976	0.440	-1.039	0.830	-0.424
		0.350	-0.353**	0.460	-1.063	0.900	-0.356
		0.370	-0.933	0.490	-0.977	0.960	-0.341
		0.380	-0.954	0.500	-1.077		
		0.400	-0.882	0.520	-1.054		
		0.410	-0.987	0.540	-1.077		
		0.430	-0.974	0.550	-1.040		
		0.440	-0.916	0.580	-1.031		
		0.460	-1.037	0.600	-1.033		
		0.470	-0.928	0.610	-0.966		
		0.490	-0.944	0.650	-2.825**		
		0.500	-0.948	0.700	-0.990		
		0.520	-0.933	0.750	-0.641		
		0.530	-0.916	0.820	-0.335		
		0.550	-0.941	0.890	-0.289		
		0.560	-0.937	0.900	-0.300		
		0.580	-0.917	0.960	-0.315		
		0.590	-0.941				
		0.600	-0.989				
		0.640	-2.662**				
		0.700	-0.364				
		0.750	-0.268				
		0.820	-2.838**				
		0.870	-0.254				
		0.930	-0.272				
		0.960	-0.258				
			Lower Surface				
0.020	-0.195	0.020	0.017	0.020	0.102	0.020	0.409
0.110	-0.043	0.060	0.198	0.060	0.278	0.060	3.200**
0.230	0.122	0.090	0.121	0.090	0.180	0.110	0.122
0.400	0.040	0.120	0.118	0.120	-0.170	0.250	0.032
0.490	0.055	0.200	0.137	0.200	0.049	0.400	0.004
0.630	3.244**	0.260	0.043	0.250	0.081	0.490	-0.051
0.750	0.182	0.400	-2.855**	0.400	0.054	0.580	-0.006
0.850	0.250	0.490	0.057	0.490	0.087	0.650	0.177
0.900	0.295	0.580	0.149	0.580	0.084	0.750	0.415
0.960	0.112	0.640	0.505	0.650	0.322	0.830	0.511
		0.750	0.357	0.750	0.467	0.900	0.595
		0.870	0.428	0.890	********	0.960	0.388
		0.930	0.350	0.930	0.428		
		0.960	0.201	0.960	-2.854**		
CN =	0.715		0.843		0.982		0.893

Table F-2. Continued.

Flight 198, Wing sweep = 26°, Time = 13-53-17-000, MINF = 0.846, Camber = 5/10, ALPT = 10.07, BETA = 0.39, QINF = 299.6, RNPU = 2.4E+06, CNWP = 0.7388

η = 0.93		0.76		0.59		0.40	
			Upper Surface				
x/c	CP	*x/c*	CP	*x/c*	CP	*x/c*	CP
0.020	-0.324	0.000	0.883	0.000	-5.702**	0.010	-0.913**
0.060	-0.495	0.020	-0.714**	0.020	-0.644**	0.020	-0.951**
0.110	-0.624	0.040	-0.378	0.060	-1.295**	0.060	-1.048
0.200	-1.004	0.060	-0.674	0.090	-0.850	0.110	-1.149
0.230	-0.886	0.090	-0.790	0.110	-0.999	0.140	1.923**
0.400	-0.878	0.130	-0.917	0.130	-1.038	0.190	-5.569**
0.490	-0.772	0.150	-0.986	0.150	-1.087	0.250	-1.315
0.590	-0.390	0.200	-1.007	0.210	-1.164	0.400	-0.899
0.630	-0.238	0.250	-1.149	0.250	-1.147	0.490	-0.835
0.700	-0.280	0.260	-1.057	0.340	-1.208	0.580	-0.759
0.750	-0.825	0.280	-1.127	0.370	-1.190	0.650	-0.708
0.810	-0.913	0.290	-1.142	0.400	-1.107	0.700	-0.768
0.840	-0.889	0.310	-1.054	0.410	-1.119	0.750	-0.748
0.900	-0.465	0.320	-1.044	0.430	-1.203	0.800	-0.528
0.960	-0.396	0.340	-1.118	0.440	-1.177	0.830	-0.431
		0.350	-0.337**	0.460	-1.176	0.900	-0.322
		0.370	-1.048	0.490	-1.082	0.960	-0.312
		0.380	-1.081	0.500	-1.185		
		0.400	-1.012	0.520	-1.171		
		0.410	-1.108	0.540	-1.190		
		0.430	-1.090	0.550	-1.164		
		0.440	-1.005	0.580	-1.142		
		0.460	-1.130	0.600	-1.091		
		0.470	-0.818	0.610	-0.758		
		0.490	-0.610	0.650	-2.841**		
		0.500	-0.558	0.700	-0.555		
		0.520	-0.526	0.750	-0.600		
		0.530	-0.511	0.820	-0.484		
		0.550	-0.461	0.890	-0.439		
		0.560	-0.483	0.900	-0.442		
		0.580	-0.455	0.960	-0.440		
		0.590	-0.481				
		0.600	-0.483				
		0.640	-2.680**				
		0.700	-0.419				
		0.750	-0.356				
		0.820	-2.854**				
		0.870	-0.362				
		0.930	-0.343				
		0.960	-0.322				
			Lower Surface				
0.020	0.032	0.020	0.260	0.020	0.307	0.020	0.562
0.110	0.028	0.060	0.304	0.060	0.385	0.060	3.132**
0.230	0.188	0.090	0.230	0.090	0.283	0.110	0.230
0.400	0.057	0.120	0.217	0.120	-0.079	0.250	0.110
0.490	0.043	0.200	0.204	0.200	0.114	0.400	0.058
0.630	3.175**	0.260	0.104	0.250	0.161	0.490	0.012
0.750	0.157	0.400	-2.871**	0.400	0.087	0.580	0.028
0.850	0.239	0.490	0.093	0.490	0.089	0.650	0.197
0.900	0.269	0.580	0.158	0.580	0.116	0.750	0.449
0.960	0.086	0.640	0.501	0.650	0.330	0.830	0.514
		0.750	0.342	0.750	0.484	0.900	0.593
		0.870	0.428	0.890	********	0.960	0.397
		0.930	0.331	0.930	0.412		
		0.960	0.191	0.960	-2.870**		
CN =	0.753		0.882		1.067		1.011

Table F-2. Continued.

Flight 198, Wing sweep = 26°, Time = 13-53-18-500, MINF = 0.845, Camber = 5/10, ALPT = 9.96, BETA = 0.28, QINF = 300.2, RNPU = 2.4E+06, CNWP = 0.7215

η = 0.93		0.76		0.59		0.40	
			Upper Surface				
x/c	CP	*x/c*	CP	*x/c*	CP	*x/c*	CP
0.020	-0.418	0.000	0.875	0.000	-5.698**	0.010	-0.898**
0.060	-0.566	0.020	-0.706**	0.020	-0.720**	0.020	-0.943**
0.110	-0.685	0.040	-0.548	0.060	-1.301**	0.060	-1.117
0.200	-1.022	0.060	-0.697	0.090	-0.888	0.110	-1.180
0.230	-0.911	0.090	-0.791	0.110	-1.040	0.140	1.919**
0.400	-0.900	0.130	-0.926	0.130	-1.081	0.190	-5.566**
0.490	-0.807	0.150	-1.024	0.150	-1.110	0.250	-1.349
0.590	-0.308	0.200	-1.027	0.210	-1.189	0.400	-0.939
0.630	-0.272	0.250	-1.166	0.250	-1.167	0.490	-0.856
0.700	-0.310	0.260	-1.076	0.340	-1.230	0.580	-0.797
0.750	-0.820	0.280	-1.151	0.370	-1.221	0.650	-0.737
0.810	-0.919	0.290	-1.161	0.400	-1.193	0.700	-0.776
0.840	-0.903	0.310	-1.089	0.410	-1.160	0.750	-0.733
0.900	-0.404	0.320	-1.073	0.430	-1.225	0.800	-0.506
0.960	-0.432	0.340	-1.138	0.440	-1.190	0.830	-0.410
		0.350	-0.360**	0.460	-1.217	0.900	-0.297
		0.370	-1.083	0.490	-1.110	0.960	-0.311
		0.380	-1.100	0.500	-1.210		
		0.400	-1.026	0.520	-1.197		
		0.410	-1.083	0.540	-1.195		
		0.430	-0.812	0.550	-1.168		
		0.440	-0.621	0.580	-1.063		
		0.460	-0.704	0.600	-0.792		
		0.470	-0.604	0.610	-0.611		
		0.490	-0.536	0.650	-2.844**		
		0.500	-0.543	0.700	-0.548		
		0.520	-0.526	0.750	-0.628		
		0.530	-0.514	0.820	-0.520		
		0.550	-0.504	0.890	-0.454		
		0.560	-0.501	0.900	-0.454		
		0.580	-0.462	0.960	-0.444		
		0.590	-0.490				
		0.600	-0.515				
		0.640	-2.683**				
		0.700	-0.434				
		0.750	-0.363				
		0.820	-2.856**				
		0.870	-0.355				
		0.930	-0.332				
		0.960	-0.333				
			Lower Surface				
0.020	0.043	0.020	0.301	0.020	0.338	0.020	0.624
0.110	0.044	0.060	0.328	0.060	0.417	0.060	3.117**
0.230	0.183	0.090	0.239	0.090	0.308	0.110	0.211
0.400	0.053	0.120	0.216	0.120	-0.063	0.250	0.121
0.490	0.027	0.200	0.203	0.200	0.112	0.400	0.072
0.630	3.160**	0.260	0.118	0.250	0.167	0.490	0.012
0.750	0.156	0.400	-2.873**	0.400	0.104	0.580	0.044
0.850	0.219	0.490	0.084	0.490	0.092	0.650	0.203
0.900	0.267	0.580	0.161	0.580	0.107	0.750	0.445
0.960	0.080	0.640	0.500	0.650	0.329	0.830	0.519
		0.750	0.354	0.750	0.471	0.900	0.604
		0.870	0.410	0.890	********	0.960	0.388
		0.930	0.323	0.930	0.410		
		0.960	0.172	0.960	-2.872**		
CN =	0.766		0.881		1.076		1.031

Table F-2. Continued.

Flight 225, Wing sweep = 26°, Time = 11-54-45-000, MINF = 0.852, Camber = 5/10, ALPT = 4.01, BETA = -0.44, QINF = 296.8, RNPU = 2.3E+06, CNWP = 0.2698

η = 0.93		0.76		0.59		0.40	
			Upper Surface				
x/c	CP	*x/c*	CP	*x/c*	CP	*x/c*	CP
0.020	0.277	0.000	0.590	0.000	3.750**	0.010	-0.081
0.060	0.047	0.020	-0.114	0.020	0.213	0.020	-0.042
0.110	-0.135	0.040	0.084	0.060	-3.793**	0.060	-0.414
0.200	-0.703	0.060	-0.166	0.090	-0.319	0.110	-0.535
0.230	-0.153	0.090	-0.293	0.110	-0.544	0.140	-0.834
0.400	-0.201	0.130	-0.431	0.130	-0.585	0.190	-1.969**
0.490	-0.221	0.150	-0.680	0.150	-0.787	0.250	-0.612
0.590	-0.283	0.200	-0.653	0.210	-0.754	0.400	-0.335
0.630	-0.317	0.250	-0.770	0.250	-0.673	0.490	-0.318
0.700	-0.365	0.260	-0.650	0.340	-0.330	0.580	-0.367
0.750	-0.641	0.280	-0.720	0.370	-0.299	0.650	-0.406
0.810	-0.593	0.290	-0.702	0.400	-0.304	0.700	-0.386
0.840	-0.578	0.310	-0.593	0.410	-1.662**	0.750	-0.490
0.900	-0.277	0.320	-0.465	0.430	-0.324	0.800	-1.114
0.960	-0.262	0.340	-0.242	0.440	-0.282	0.830	-0.586
		0.350	-0.207**	0.460	-0.324	0.900	-0.429
		0.370	-0.173	0.490	-0.195	0.960	-0.425
		0.380	-0.264	0.500	-0.335		
		0.400	-0.145	0.520	-0.278		
		0.410	-0.285	0.540	-0.291		
		0.430	-0.254	0.550	-0.274		
		0.440	-0.172	0.580	-0.295		
		0.460	-0.357	0.600	-0.297		
		0.470	-0.271	0.610	-0.321		
		0.490	-0.287	0.650	2.291**		
		0.500	-0.325	0.700	-0.547		
		0.520	-0.313	0.750	-0.640		
		0.530	-0.280	0.820	-0.724		
		0.550	-0.298	0.890	-0.393		
		0.560	-0.328	0.900	-0.462		
		0.580	-0.303	0.960	-0.372		
		0.590	-0.347				
		0.600	-0.378				
		0.640	-0.507				
		0.700	-0.513				
		0.750	0.000**				
		0.820	-0.526				
		0.870	-0.305				
		0.930	-0.325				
		0.960	-0.321				
			Lower Surface				
0.020	-1.074	0.020	-1.172	0.020	-0.975	0.020	-0.192
0.110	-0.170	0.060	-0.249	0.060	-0.082	0.060	1.998**
0.230	-0.038	0.090	-0.202	0.090	1.516**	0.110	-0.107
0.400	0.028	0.120	-0.102	0.120	-0.477	0.250	-0.210
0.490	0.070	0.200	-0.054	0.200	-0.128	0.400	-0.158
0.630	2.298**	0.260	-0.129	0.250	-0.106	0.490	-0.213
0.750	0.175	0.400	-0.032	0.400	-0.089	0.580	-0.113
0.850	0.269	0.490	-0.024	0.490	-0.013	0.650	0.101
0.900	0.310	0.580	0.060	0.580	0.039	0.750	0.306
0.960	0.151	0.640	0.287	0.650	-0.027	0.830	0.470
		0.750	0.357	0.750	0.115	0.900	0.517
		0.870	0.394	0.890	0.425	0.960	0.342
		0.930	0.314	0.930	0.347		
		0.960	0.208	0.960	-1.915**		
CN =	0.352		0.478		0.443		0.500

Table F-2. Continued.

Flight 225, Wing sweep = 26°, Time = 11-55-6-500, MINF = 0.848, Camber = 5/11, ALPT = 5.03, BETA = -0.67, QINF = 291.2, RNPU = 2.3E+06, CNWP = 0.3505

η = 0.93		0.76		0.59		0.40	
			Upper Surface				
x/c	CP	*x/c*	CP	*x/c*	CP	*x/c*	CP
0.020	0.164	0.000	0.681	0.000	3.843**	0.010	-0.309
0.060	-0.147	0.020	-0.010	0.020	0.034	0.020	-0.204
0.110	-0.492	0.040	-0.023	0.060	-3.847**	0.060	-0.584
0.200	-0.777	0.060	-0.292	0.090	-0.385	0.110	-0.738
0.230	-0.643	0.090	-0.374	0.110	-0.640	0.140	-0.953
0.400	-0.154	0.130	-0.516	0.130	-0.677	0.190	-1.987**
0.490	-0.198	0.150	-0.767	0.150	-0.891	0.250	-0.663
0.590	-0.339	0.200	-0.759	0.210	-0.841	0.400	-0.416
0.630	-0.323	0.250	-0.887	0.250	-0.794	0.490	-0.397
0.700	-0.364	0.260	-0.750	0.340	-0.874	0.580	-0.409
0.750	-0.977	0.280	-0.834	0.370	-0.842	0.650	-0.457
0.810	-0.800	0.290	-0.816	0.400	-0.853	0.700	-0.432
0.840	-0.738	0.310	-0.785	0.410	-1.675**	0.750	-0.526
0.900	-0.319	0.320	-0.773	0.430	-0.496	0.800	-1.030
0.960	-0.347	0.340	-0.758	0.440	-0.368	0.830	-0.590
		0.350	-0.484**	0.460	-0.350	0.900	-0.433
		0.370	-0.741	0.490	-0.225	0.960	-0.454
		0.380	-0.832	0.500	-0.333		
		0.400	-0.723	0.520	-0.260		
		0.410	-0.806	0.540	-0.271		
		0.430	-0.397	0.550	-0.234		
		0.440	-0.244	0.580	-0.242		
		0.460	-0.323	0.600	-0.286		
		0.470	-0.213	0.610	-0.295		
		0.490	-0.197	0.650	2.355**		
		0.500	-0.163	0.700	-0.549		
		0.520	-0.178	0.750	-0.637		
		0.530	-0.186	0.820	-0.684		
		0.550	-0.306	0.890	-0.391		
		0.560	-0.247	0.900	-0.471		
		0.580	-0.237	0.960	-0.364		
		0.590	-0.306				
		0.600	-0.340				
		0.640	-0.497				
		0.700	-0.469				
		0.750	-0.003**				
		0.820	-0.524				
		0.870	-0.370				
		0.930	-0.343				
		0.960	-0.341				
			Lower Surface				
0.020	-0.726	0.020	-0.615	0.020	-0.299	0.020	-0.001
0.110	-0.162	0.060	-0.086	0.060	0.013	0.060	2.057**
0.230	-0.022	0.090	-0.130	0.090	1.565**	0.110	-0.078
0.400	0.022	0.120	-0.066	0.120	-0.431	0.250	-0.139
0.490	0.068	0.200	-0.008	0.200	-0.114	0.400	-0.123
0.630	2.363**	0.260	-0.086	0.250	-0.059	0.490	-0.159
0.750	0.167	0.400	-0.013	0.400	-0.046	0.580	-0.090
0.850	0.275	0.490	-0.005	0.490	0.014	0.650	0.130
0.900	0.317	0.580	0.077	0.580	0.066	0.750	0.326
0.960	0.118	0.640	0.301	0.650	-0.015	0.830	0.483
		0.750	0.378	0.750	0.099	0.900	0.525
		0.870	0.410	0.890	0.445	0.960	0.348
		0.930	0.313	0.930	0.389		
		0.960	0.220	0.960	-1.932**		
CN =	0.477		0.584		0.559		0.594

Table F-2. Continued.

Flight 225, Wing sweep = 26°, Time = 11-55-20-500, MINF = 0.852, Camber = 5/10, ALPT = 7.94, BETA = -0.15, QINF = 296.1, RNPU = 2.3E+06, CNWP = 0.5658

η = 0.93		0.76		0.59		0.40	
			Upper Surface				
x/c	CP	*x/c*	CP	*x/c*	CP	*x/c*	CP
0.020	-0.157	0.000	0.862	0.000	3.582**	0.010	-0.783
0.060	-0.392	0.020	-0.461	0.020	-0.349	0.020	-0.741
0.110	-0.619	0.040	-0.293	0.060	-3.799**	0.060	-0.784
0.200	-0.853	0.060	-0.619	0.090	-0.682	0.110	-0.975
0.230	-0.757	0.090	-0.636	0.110	-0.902	0.140	-1.160
0.400	-0.758	0.130	-0.738	0.130	-0.879	0.190	-1.970**
0.490	-0.631	0.150	-0.902	0.150	-1.028	0.250	-1.182
0.590	-0.639	0.200	-0.884	0.210	-1.015	0.400	-0.868
0.630	-0.448	0.250	-1.036	0.250	-0.971	0.490	-0.710
0.700	-0.341	0.260	-0.923	0.340	-1.059	0.580	-0.663
0.750	-0.849	0.280	-0.997	0.370	-1.036	0.650	-0.662
0.810	-0.830	0.290	-1.003	0.400	-1.049	0.700	-0.673
0.840	-0.824	0.310	-0.978	0.410	-2.008**	0.750	-0.716
0.900	-0.549	0.320	-0.956	0.430	-1.082	0.800	-0.561
0.960	-0.550	0.340	-0.959	0.440	-1.023	0.830	-0.450
		0.350	-0.480**	0.460	-1.065	0.900	-0.369
		0.370	-0.922	0.490	-0.949	0.960	-0.369
		0.380	-1.049	0.500	-1.089		
		0.400	-0.893	0.520	-1.028		
		0.410	-1.028	0.540	-1.059		
		0.430	-0.971	0.550	-1.011		
		0.440	-0.887	0.580	-1.004		
		0.460	-1.096	0.600	-1.005		
		0.470	-0.994	0.610	-1.011		
		0.490	-0.974	0.650	2.299**		
		0.500	-0.976	0.700	-0.994		
		0.520	-0.979	0.750	-0.769		
		0.530	-0.936	0.820	-0.351		
		0.550	-1.035	0.890	-0.307		
		0.560	-0.973	0.900	-0.305		
		0.580	-0.967	0.960	-0.273		
		0.590	-1.013				
		0.600	-1.027				
		0.640	-0.429				
		0.700	-0.400				
		0.750	0.033**				
		0.820	-0.258				
		0.870	-0.265				
		0.930	-0.308				
		0.960	-0.288				
			Lower Surface				
0.020	-0.279	0.020	0.009	0.020	0.113	0.020	0.382
0.110	-0.049	0.060	0.141	0.060	0.254	0.060	1.901**
0.230	0.083	0.090	0.060	0.090	1.522**	0.110	0.136
0.400	0.027	0.120	0.097	0.120	-0.204	0.250	0.012
0.490	0.058	0.200	0.086	0.200	0.002	0.400	0.007
0.630	1.962**	0.260	0.002	0.250	0.067	0.490	-0.082
0.750	0.135	0.400	0.035	0.400	0.034	0.580	-0.044
0.850	0.237	0.490	0.017	0.490	0.032	0.650	0.157
0.900	0.315	0.580	0.086	0.580	0.093	0.750	0.369
0.960	0.119	0.640	0.298	0.650	0.021	0.830	0.515
		0.750	0.376	0.750	0.133	0.900	0.554
		0.870	0.423	0.890	0.466	0.960	0.358
		0.930	0.325	0.930	0.381		
		0.960	0.215	0.960	-2.097**		
CN =	0.712		0.822		0.885		0.908

Table F-2. Continued.

Flight 225, Wing sweep = 26°, Time = 11-55-22-000, MINF = 0.854, Camber = 5/10, ALPT = 7.95, BETA = -0.15, QINF = 299.3, RNPU = 2.4E+06, CNWP = 0.5851

η = 0.93		0.76		0.59		0.40	
			Upper Surface				
x/c	CP	*x/c*	CP	*x/c*	CP	*x/c*	CP
0.020	-0.110	0.000	0.847	0.000	3.534**	0.010	-0.763
0.060	-0.269	0.020	-0.527	0.020	-0.324	0.020	-0.743
0.110	-0.483	0.040	-0.277	0.060	-3.768**	0.060	-0.765
0.200	-0.853	0.060	-0.606	0.090	-0.752	0.110	-0.974
0.230	-0.740	0.090	-0.635	0.110	-0.869	0.140	-1.193
0.400	-0.756	0.130	-0.733	0.130	-0.853	0.190	-1.959**
0.490	-0.670	0.150	-0.902	0.150	-1.033	0.250	-1.115
0.590	-0.627	0.200	-0.863	0.210	-1.019	0.400	-0.869
0.630	-0.465	0.250	-1.007	0.250	-0.956	0.490	-0.726
0.700	-0.437	0.260	-0.922	0.340	-1.043	0.580	-0.660
0.750	-0.846	0.280	-1.011	0.370	-1.035	0.650	-0.650
0.810	-0.816	0.290	-0.979	0.400	-1.055	0.700	-0.665
0.840	-0.810	0.310	-0.971	0.410	-1.997**	0.750	-0.703
0.900	-0.563	0.320	-0.960	0.430	-1.065	0.800	-0.578
0.960	-0.568	0.340	-0.944	0.440	-1.007	0.830	-0.431
		0.350	-0.484**	0.460	-1.043	0.900	-0.369
		0.370	-0.922	0.490	-0.926	0.960	-0.375
		0.380	-1.028	0.500	-1.097		
		0.400	-0.879	0.520	-1.012		
		0.410	-1.027	0.540	-1.057		
		0.430	-0.979	0.550	-0.995		
		0.440	-0.890	0.580	-0.985		
		0.460	-1.067	0.600	-1.004		
		0.470	-0.967	0.610	-0.982		
		0.490	-0.954	0.650	2.265**		
		0.500	-0.991	0.700	-1.008		
		0.520	-0.964	0.750	-0.767		
		0.530	-0.947	0.820	-0.357		
		0.550	-0.997	0.890	-0.329		
		0.560	-0.972	0.900	-0.322		
		0.580	-0.967	0.960	-0.283		
		0.590	-1.007				
		0.600	-1.021				
		0.640	-0.408				
		0.700	-0.387				
		0.750	0.041**				
		0.820	-0.280				
		0.870	-0.298				
		0.930	-0.311				
		0.960	-0.299				
			Lower Surface				
0.020	-0.305	0.020	-0.004	0.020	0.102	0.020	0.384
0.110	-0.058	0.060	0.130	0.060	0.255	0.060	1.871**
0.230	0.099	0.090	0.050	0.090	1.497**	0.110	0.115
0.400	0.040	0.120	0.101	0.120	-0.233	0.250	-0.016
0.490	0.033	0.200	0.091	0.200	-0.004	0.400	-0.002
0.630	1.931**	0.260	0.007	0.250	0.064	0.490	-0.076
0.750	0.162	0.400	0.025	0.400	0.024	0.580	-0.053
0.850	0.233	0.490	0.026	0.490	0.040	0.650	0.160
0.900	0.312	0.580	0.075	0.580	0.079	0.750	0.345
0.960	0.096	0.640	0.315	0.650	0.011	0.830	0.514
		0.750	0.354	0.750	0.137	0.900	0.545
		0.870	0.437	0.890	0.452	0.960	0.363
		0.930	0.312	0.930	0.389		
		0.960	0.210	0.960	-2.084**		
CN =	0.702		0.819		0.882		0.889

Table F-2. Continued.

Flight 225, Wing sweep = 26°, Time = 11-48-47-500, MINF = 0.855, Camber = 10/2, ALPT = 5.08, BETA = -0.04, QINF = 299.0, RNPU = 2.3E+06, CNWP = 0.3061

η = 0.93		0.76		0.59		0.40	
			Upper Surface				
x/c	CP	*x/c*	CP	*x/c*	CP	*x/c*	CP
0.020	0.485	0.000	0.213	0.000	3.887**	0.010	0.351
0.060	0.049	0.020	0.165	0.020	0.527	0.020	0.238
0.110	-0.363	0.040	0.281	0.060	-3.588**	0.060	-0.309
0.200	-0.971	0.060	-0.101	0.090	-0.257	0.110	-0.576
0.230	-0.882	0.090	-0.277	0.110	-0.570	0.140	-1.033
0.400	-0.146	0.130	-0.512	0.130	-0.755	0.190	-1.954**
0.490	-0.094	0.150	-0.823	0.150	-0.994	0.250	-0.779
0.590	-0.214	0.200	-0.881	0.210	-0.947	0.400	-0.664
0.630	-0.206	0.250	-0.962	0.250	-0.865	0.490	-0.402
0.700	-0.161	0.260	-0.861	0.340	-0.900	0.580	-0.405
0.750	-0.241	0.280	-0.910	0.370	-0.893	0.650	-0.408
0.810	-0.238	0.290	-0.899	0.400	-0.901	0.700	-0.413
0.840	-0.178	0.310	-0.871	0.410	-1.650**	0.750	-0.444
0.900	-0.123	0.320	-0.838	0.430	-0.893	0.800	-0.409
0.960	-0.038	0.340	-0.834	0.440	-0.848	0.830	-0.298
		0.350	-0.521**	0.460	-0.863	0.900	-0.166
		0.370	-0.792	0.490	-0.427	0.960	-0.001
		0.380	-0.904	0.500	-0.405		
		0.400	-0.815	0.520	-0.304		
		0.410	-0.890	0.540	-0.279		
		0.430	-0.830	0.550	-0.240		
		0.440	-0.749	0.580	-0.199		
		0.460	-0.906	0.600	-0.228		
		0.470	-0.781	0.610	-0.227		
		0.490	-0.600	0.650	2.453**		
		0.500	-0.356	0.700	-0.330		
		0.520	-0.286	0.750	-0.425		
		0.530	-0.190	0.820	-0.321		
		0.550	-0.204	0.890	-0.094		
		0.560	-0.144	0.900	-0.067		
		0.580	-0.144	0.960	0.074		
		0.590	-0.167				
		0.600	-0.188				
		0.640	-0.231				
		0.700	-0.259				
		0.750	-0.033**				
		0.820	-0.224				
		0.870	-0.211				
		0.930	-0.097				
		0.960	-0.028				
			Lower Surface				
0.020	-0.822	0.020	-0.187	0.020	-0.802	0.020	-0.758
0.110	-0.556	0.060	-0.611	0.060	-0.453	0.060	2.208**
0.230	-0.097	0.090	-0.491	0.090	1.506**	0.110	-0.090
0.400	-0.005	0.120	-0.193	0.120	-0.479	0.250	-0.176
0.490	-0.001	0.200	-0.083	0.200	-0.192	0.400	-0.215
0.630	2.282**	0.260	-0.133	0.250	-0.076	0.490	-0.330
0.750	0.017	0.400	-0.111	0.400	-0.168	0.580	-0.322
0.850	0.134	0.490	-0.137	0.490	-0.042	0.650	-0.146
0.900	0.169	0.580	-0.093	0.580	-0.163	0.750	0.098
0.960	0.135	0.640	0.051	0.650	-0.057	0.830	0.295
		0.750	0.177	0.750	0.077	0.900	0.336
		0.870	0.264	0.890	0.248	0.960	0.287
		0.930	0.187	0.930	0.226		
		0.960	0.173	0.960	-1.738**		
CN =	0.212		0.375		0.378		0.398

Table F-2. Continued.

Flight 225, Wing sweep = 26°, Time = 11-49-11-500, MINF = 0.857, Camber = 10/2, ALPT = 5.99, BETA = -0.30, QINF = 299.3, RNPU = 2.3E+06, CNWP = 0.3632

η = 0.93		0.76		0.59		0.40	
			Upper Surface				
x/c	CP	*x/c*	CP	*x/c*	CP	*x/c*	CP
0.020	0.442	0.000	0.289	0.000	3.888**	0.010	0.257
0.060	-0.002	0.020	0.341	0.020	0.460	0.020	0.149
0.110	-0.392	0.040	0.264	0.060	-3.579**	0.060	-0.440
0.200	-1.015	0.060	-0.157	0.090	-0.304	0.110	-0.708
0.230	-0.793	0.090	-0.315	0.110	-0.624	0.140	-1.063
0.400	-0.721	0.130	-0.545	0.130	-0.797	0.190	-1.947**
0.490	-0.070	0.150	-0.860	0.150	-1.013	0.250	-1.027
0.590	-0.174	0.200	-0.903	0.210	-0.983	0.400	-0.777
0.630	-0.181	0.250	-1.000	0.250	-0.910	0.490	-0.505
0.700	-0.137	0.260	-0.895	0.340	-0.969	0.580	-0.493
0.750	-0.255	0.280	-0.963	0.370	-0.957	0.650	-0.519
0.810	-0.240	0.290	-0.945	0.400	-0.984	0.700	-0.516
0.840	-0.195	0.310	-0.916	0.410	-1.643**	0.750	-0.562
0.900	-0.146	0.320	-0.901	0.430	-0.977	0.800	-0.327
0.960	-0.047	0.340	-0.897	0.440	-0.914	0.830	-0.229
		0.350	-0.516**	0.460	-0.950	0.900	-0.111
		0.370	-0.852	0.490	-0.852	0.960	0.016
		0.380	-0.967	0.500	-0.974		
		0.400	-0.765	0.520	-0.923		
		0.410	-0.942	0.540	-0.921		
		0.430	-0.894	0.550	-0.726		
		0.440	-0.822	0.580	-0.507		
		0.460	-0.986	0.600	-0.446		
		0.470	-0.892	0.610	-0.397		
		0.490	-0.891	0.650	2.456**		
		0.500	-0.826	0.700	-0.284		
		0.520	-0.886	0.750	-0.375		
		0.530	-0.857	0.820	-0.256		
		0.550	-0.927	0.890	-0.079		
		0.560	-0.808	0.900	-0.035		
		0.580	-0.473	0.960	0.071		
		0.590	-0.379				
		0.600	-0.320				
		0.640	-0.129				
		0.700	-0.155				
		0.750	-0.025**				
		0.820	-0.173				
		0.870	-0.184				
		0.930	-0.073				
		0.960	-0.012				
			Lower Surface				
0.020	-0.744	0.020	-0.171	0.020	-0.881	0.020	-0.503
0.110	-0.512	0.060	-0.493	0.060	-0.160	0.060	2.210**
0.230	-0.077	0.090	-0.357	0.090	1.509**	0.110	-0.004
0.400	0.000	0.120	-0.085	0.120	-0.354	0.250	-0.133
0.490	-0.010	0.200	-0.070	0.200	-0.139	0.400	-0.181
0.630	2.285**	0.260	-0.098	0.250	-0.057	0.490	-0.288
0.750	0.022	0.400	-0.090	0.400	-0.147	0.580	-0.321
0.850	0.120	0.490	-0.128	0.490	-0.029	0.650	-0.119
0.900	0.168	0.580	-0.088	0.580	-0.147	0.750	0.107
0.960	0.136	0.640	0.067	0.650	-0.044	0.830	0.308
		0.750	0.199	0.750	0.067	0.900	0.344
		0.870	0.186	0.890	0.267	0.960	0.271
		0.930	0.206	0.930	0.242		
		0.960	0.174	0.960	-1.731**		
CN =	0.287		0.449		0.495		0.516

Table F-2. Continued.

Flight 225, Wing sweep = 26°, Time = 11-49-15-000, MINF = 0.856, Camber = 10/2, ALPT = 7.10, BETA = -0.56, QINF = 297.6, RNPU = 2.3E+06, CNWP = 0.4462

η = 0.93		0.76		0.59		0.40	
			Upper Surface				
x/c	CP	*x/c*	CP	*x/c*	CP	*x/c*	CP
0.020	0.395	0.000	0.397	0.000	3.916**	0.010	0.118
0.060	-0.024	0.020	0.121	0.020	0.373	0.020	0.031
0.110	-0.353	0.040	0.176	0.060	-3.592**	0.060	-0.509
0.200	-1.052	0.060	-0.198	0.090	-0.372	0.110	-0.823
0.230	-0.911	0.090	-0.353	0.110	-0.666	0.140	-1.151
0.400	-0.778	0.130	-0.594	0.130	-0.830	0.190	-1.951**
0.490	-0.516	0.150	-0.903	0.150	-1.054	0.250	-1.069
0.590	-0.168	0.200	-0.953	0.210	-1.028	0.400	-0.803
0.630	-0.160	0.250	-1.063	0.250	-0.973	0.490	-0.624
0.700	-0.115	0.260	-0.941	0.340	-1.029	0.580	-0.558
0.750	-0.241	0.280	-1.005	0.370	-1.034	0.650	-0.566
0.810	-0.270	0.290	-1.005	0.400	-1.049	0.700	-0.574
0.840	-0.178	0.310	-0.982	0.410	-1.646**	0.750	-0.602
0.900	-0.162	0.320	-0.957	0.430	-1.036	0.800	-0.322
0.960	-0.062	0.340	-0.957	0.440	-0.985	0.830	-0.205
		0.350	-0.544**	0.460	-1.027	0.900	-0.064
		0.370	-0.912	0.490	-0.926	0.960	0.015
		0.380	-1.030	0.500	-1.049		
		0.400	-0.884	0.520	-0.989		
		0.410	-1.009	0.540	-1.015		
		0.430	-0.961	0.550	-0.958		
		0.440	-0.875	0.580	-0.926		
		0.460	-1.057	0.600	-0.945		
		0.470	-0.962	0.610	-0.894		
		0.490	-0.952	0.650	2.476**		
		0.500	-0.988	0.700	-0.342		
		0.520	-0.955	0.750	-0.392		
		0.530	-0.926	0.820	-0.183		
		0.550	-0.998	0.890	-0.037		
		0.560	-0.943	0.900	-0.002		
		0.580	-0.939	0.960	0.096		
		0.590	-1.005				
		0.600	-0.984				
		0.640	-0.257				
		0.700	-0.226				
		0.750	-0.011**				
		0.820	-0.088				
		0.870	-0.123				
		0.930	-0.045				
		0.960	0.013				
			Lower Surface				
0.020	-0.669	0.020	-0.169	0.020	-0.613	0.020	-0.241
0.110	-0.327	0.060	-0.292	0.060	0.057	0.060	2.229**
0.230	-0.051	0.090	-0.164	0.090	1.524**	0.110	0.064
0.400	-0.012	0.120	0.031	0.120	-0.288	0.250	-0.074
0.490	-0.004	0.200	-0.045	0.200	-0.133	0.400	-0.124
0.630	2.305**	0.260	-0.041	0.250	-0.010	0.490	-0.245
0.750	0.021	0.400	-0.061	0.400	-0.111	0.580	-0.276
0.850	0.120	0.490	-0.110	0.490	-0.016	0.650	-0.112
0.900	0.162	0.580	-0.089	0.580	-0.133	0.750	0.120
0.960	0.135	0.640	0.078	0.650	-0.038	0.830	0.317
		0.750	0.190	0.750	0.075	0.900	0.350
		0.870	0.240	0.890	0.290	0.960	0.273
		0.930	0.225	0.930	0.261		
		0.960	0.182	0.960	-1.733**		
CN =	0.382		0.558		0.609		0.596

Table F-2. Continued.

Flight 225, Wing sweep = 26°, Time = 11-49-22-500, MINF = 0.842, Camber = 10/2, ALPT = 8.03, BETA = -0.21, QINF = 285.9, RNPU = 2.3E+06, CNWP = 0.4587

η = 0.93		0.76		0.59		0.40	
			Upper Surface				
x/c	CP	*x/c*	CP	*x/c*	CP	*x/c*	CP
0.020	0.327	0.000	0.508	0.000	4.094**	0.010	-0.057
0.060	-0.116	0.020	0.043	0.020	0.221	0.020	0.027
0.110	-0.520	0.040	0.070	0.060	-3.722**	0.060	-0.655
0.200	-1.092	0.060	-0.319	0.090	-0.436	0.110	-0.963
0.230	-0.990	0.090	-0.460	0.110	-0.781	0.140	-1.275
0.400	-0.856	0.130	-0.684	0.130	-0.934	0.190	-2.014**
0.490	-0.474	0.150	-0.995	0.150	-1.169	0.250	-1.230
0.590	-0.198	0.200	-1.052	0.210	-1.121	0.400	-0.899
0.630	-0.190	0.250	-1.162	0.250	-1.064	0.490	-0.732
0.700	-0.139	0.260	-1.034	0.340	-1.149	0.580	-0.662
0.750	-0.259	0.280	-1.121	0.370	-1.126	0.650	-0.610
0.810	-0.302	0.290	-1.121	0.400	-1.052	0.700	-0.592
0.840	-0.223	0.310	-1.089	0.410	-1.696**	0.750	-0.343
0.900	-0.194	0.320	-1.063	0.430	-1.156	0.800	-0.289
0.960	-0.099	0.340	-1.065	0.440	-1.100	0.830	-0.187
		0.350	-0.566**	0.460	-1.145	0.900	-0.069
		0.370	-1.017	0.490	-1.050	0.960	0.005
		0.380	-1.146	0.500	-1.164		
		0.400	-0.984	0.520	-1.101		
		0.410	-1.117	0.540	-1.132		
		0.430	-1.053	0.550	-1.083		
		0.440	-0.983	0.580	-1.094		
		0.460	-1.170	0.600	-0.790		
		0.470	-1.086	0.610	-0.575		
		0.490	-1.061	0.650	2.594**		
		0.500	-1.058	0.700	-0.415		
		0.520	-1.066	0.750	-0.484		
		0.530	-1.036	0.820	-0.169		
		0.550	-1.117	0.890	-0.034		
		0.560	-1.049	0.900	-0.007		
		0.580	-0.688	0.960	0.084		
		0.590	-0.615				
		0.600	-0.543				
		0.640	-0.310				
		0.700	-0.288				
		0.750	-0.005**				
		0.820	-0.094				
		0.870	-0.111				
		0.930	-0.045				
		0.960	-0.004				
			Lower Surface				
0.020	-0.679	0.020	-0.151	0.020	-0.213	0.020	-0.033
0.110	-0.074	0.060	-0.011	0.060	0.172	0.060	2.337**
0.230	-0.021	0.090	-0.019	0.090	1.603**	0.110	0.147
0.400	-0.023	0.120	0.088	0.120	-0.247	0.250	-0.018
0.490	0.001	0.200	-0.023	0.200	-0.101	0.400	-0.074
0.630	2.416**	0.260	-0.011	0.250	0.041	0.490	-0.191
0.750	0.011	0.400	-0.047	0.400	-0.058	0.580	-0.213
0.850	0.093	0.490	-0.094	0.490	0.001	0.650	-0.084
0.900	0.155	0.580	-0.088	0.580	-0.107	0.750	0.121
0.960	0.118	0.640	0.079	0.650	-0.022	0.830	0.320
		0.750	0.197	0.750	0.102	0.900	0.349
		0.870	0.248	0.890	0.281	0.960	0.258
		0.930	0.205	0.930	0.250		
		0.960	0.175	0.960	-1.787**		
CN =	0.462		0.638		0.682		0.695

Table F-2. Continued.

Flight 225, Wing sweep = 26°, Time = 11-49-26-500, MINF = 0.845, Camber = 10/2, ALPT = 8.07, BETA = -0.10, QINF = 287.6, RNPU = 2.3E+06, CNWP = 0.4815

η = 0.93		0.76		0.59		0.40	
			Upper Surface				
x/c	CP	*x/c*	CP	*x/c*	CP	*x/c*	CP
0.020	0.311	0.000	0.507	0.000	4.071**	0.010	-0.056
0.060	-0.105	0.020	0.044	0.020	0.229	0.020	-0.037
0.110	-0.359	0.040	0.052	0.060	-3.699**	0.060	-0.596
0.200	-1.097	0.060	-0.316	0.090	-0.465	0.110	-0.977
0.230	-0.809	0.090	-0.456	0.110	-0.766	0.140	-1.248
0.400	-0.873	0.130	-0.685	0.130	-0.927	0.190	-2.001**
0.490	-0.722	0.150	-0.992	0.150	-1.152	0.250	-1.251
0.590	-0.200	0.200	-1.045	0.210	-1.114	0.400	-0.900
0.630	-0.183	0.250	-1.154	0.250	-1.057	0.490	-0.736
0.700	-0.133	0.260	-1.027	0.340	-1.141	0.580	-0.662
0.750	-0.256	0.280	-1.122	0.370	-1.142	0.650	-0.653
0.810	-0.284	0.290	-1.095	0.400	-1.091	0.700	-0.630
0.840	-0.209	0.310	-1.085	0.410	-1.685**	0.750	-0.400
0.900	-0.189	0.320	-1.055	0.430	-1.148	0.800	-0.286
0.960	-0.097	0.340	-1.058	0.440	-1.109	0.830	-0.176
		0.350	-0.561**	0.460	-1.142	0.900	-0.067
		0.370	-1.010	0.490	-1.059	0.960	-0.009
		0.380	-1.143	0.500	-1.166		
		0.400	-0.977	0.520	-1.102		
		0.410	-1.110	0.540	-1.124		
		0.430	-1.061	0.550	-1.075		
		0.440	-0.976	0.580	-1.050		
		0.460	-1.162	0.600	-1.072		
		0.470	-1.058	0.610	-0.710		
		0.490	-1.062	0.650	2.581**		
		0.500	-1.107	0.700	-0.458		
		0.520	-1.067	0.750	-0.518		
		0.530	-1.036	0.820	-0.180		
		0.550	-1.090	0.890	-0.032		
		0.560	-1.036	0.900	-0.011		
		0.580	-0.710	0.960	0.095		
		0.590	-0.629				
		0.600	-0.569				
		0.640	-0.352				
		0.700	-0.339				
		0.750	0.003**				
		0.820	-0.120				
		0.870	-0.094				
		0.930	-0.044				
		0.960	-0.006				
			Lower Surface				
0.020	-0.702	0.020	-0.149	0.020	-0.194	0.020	-0.025
0.110	-0.065	0.060	-0.002	0.060	0.173	0.060	2.325**
0.230	-0.011	0.090	-0.012	0.090	1.596**	0.110	0.127
0.400	-0.026	0.120	0.096	0.120	-0.236	0.250	-0.017
0.490	-0.013	0.200	-0.014	0.200	-0.113	0.400	-0.072
0.630	2.403**	0.260	-0.010	0.250	0.050	0.490	-0.189
0.750	0.008	0.400	-0.033	0.400	-0.061	0.580	-0.226
0.850	0.106	0.490	-0.100	0.490	-0.005	0.650	-0.090
0.900	0.161	0.580	-0.094	0.580	-0.112	0.750	0.127
0.960	0.128	0.640	0.076	0.650	-0.021	0.830	0.328
		0.750	0.223	0.750	0.095	0.900	0.349
		0.870	0.238	0.890	0.280	0.960	0.264
		0.930	0.206	0.930	0.250		
		0.960	0.168	0.960	-1.776**		
CN =	0.453		0.649		0.698		0.704

Table F-2. Continued.

Flight 225, Wing sweep = 26°, Time = 11-49-33-000, MINF = 0.851, Camber = 10/2, ALPT = 9.05, BETA = -0.10, QINF = 295.0, RNPU = 2.3E+06, CNWP = 0.4381

η = 0.93		0.76		0.59		0.40	
			Upper Surface				
x/c	CP	*x/c*	CP	*x/c*	CP	*x/c*	CP
0.020	0.256	0.000	0.638	0.000	3.948**	0.010	-0.067
0.060	-0.169	0.020	-0.063	0.020	0.152	0.020	-0.127
0.110	-0.473	0.040	-0.008	0.060	-3.628**	0.060	-0.715
0.200	-1.127	0.060	-0.346	0.090	-0.592	0.110	-1.038
0.230	-0.968	0.090	-0.503	0.110	-0.839	0.140	-1.295
0.400	-0.621	0.130	-0.672	0.130	-0.982	0.190	-1.972**
0.490	-0.274	0.150	-1.023	0.150	-1.174	0.250	-1.254
0.590	-0.240	0.200	-1.065	0.210	-1.148	0.400	-0.975
0.630	-0.236	0.250	-1.183	0.250	-1.084	0.490	-0.795
0.700	-0.178	0.260	-1.069	0.340	-1.195	0.580	-0.769
0.750	-0.303	0.280	-1.153	0.370	-1.169	0.650	-0.524
0.810	-0.275	0.290	-1.112	0.400	-1.167	0.700	-0.490
0.840	-0.232	0.310	-1.009	0.410	-1.664**	0.750	-0.315
0.900	-0.173	0.320	-0.979	0.430	-0.958	0.800	-0.284
0.960	-0.122	0.340	-1.036	0.440	-0.705	0.830	-0.242
		0.350	-0.527**	0.460	-0.681	0.900	-0.120
		0.370	-0.682	0.490	-0.555	0.960	-0.041
		0.380	-0.725	0.500	-0.649		
		0.400	-0.576	0.520	-0.627		
		0.410	-0.673	0.540	-0.617		
		0.430	-0.594	0.550	-0.578		
		0.440	-0.521	0.580	-0.567		
		0.460	-0.656	0.600	-0.535		
		0.470	-0.557	0.610	-0.519		
		0.490	-0.529	0.650	2.495**		
		0.500	-0.544	0.700	-0.482		
		0.520	-0.542	0.750	-0.575		
		0.530	-0.476	0.820	-0.368		
		0.550	-0.537	0.890	-0.288		
		0.560	-0.478	0.900	-0.290		
		0.580	-0.487	0.960	-0.198		
		0.590	-0.482				
		0.600	-0.496				
		0.640	-0.371				
		0.700	-0.381				
		0.750	-0.013**				
		0.820	-0.253				
		0.870	-0.343				
		0.930	-0.247				
		0.960	-0.224				
			Lower Surface				
0.020	-0.804	0.020	-0.136	0.020	-0.054	0.020	0.205
0.110	-0.043	0.060	0.114	0.060	0.204	0.060	2.246**
0.230	0.006	0.090	0.048	0.090	1.535**	0.110	0.277
0.400	-0.005	0.120	0.158	0.120	-0.160	0.250	0.039
0.490	-0.041	0.200	0.003	0.200	-0.075	0.400	-0.040
0.630	2.322**	0.260	0.007	0.250	0.099	0.490	-0.160
0.750	-0.053	0.400	-0.039	0.400	-0.051	0.580	-0.226
0.850	0.062	0.490	-0.119	0.490	-0.011	0.650	-0.087
0.900	0.130	0.580	-0.118	0.580	-0.115	0.750	0.138
0.960	0.079	0.640	0.033	0.650	-0.033	0.830	0.314
		0.750	0.161	0.750	0.110	0.900	0.349
		0.870	0.204	0.890	0.238	0.960	0.255
		0.930	0.124	0.930	0.185		
		0.960	0.057	0.960	-1.753**		
CN =	0.400		0.583		0.694		0.765

Table F-2. Continued.

Flight 225, Wing sweep = 26°, Time = 11-51-4-500, MINF = 0.853, Camber = 10/2, ALPT = 9.10, BETA = -0.62, QINF = 296.4, RNPU = 2.3E+06, CNWP = 0.4796

η = 0.93		0.76		0.59		0.40	
			Upper Surface				
x/c	CP	*x/c*	CP	*x/c*	CP	*x/c*	CP
0.020	0.273	0.000	0.600	0.000	3.766**	0.010	-0.017
0.060	-0.154	0.020	-0.019	0.020	0.161	0.020	-0.125
0.110	-0.260	0.040	0.020	0.060	-3.788**	0.060	-0.689
0.200	-1.108	0.060	-0.374	0.090	-0.572	0.110	-0.992
0.230	-1.071	0.090	-0.490	0.110	-0.821	0.140	-1.269
0.400	-0.867	0.130	-0.709	0.130	-0.946	0.190	-1.961**
0.490	-0.319	0.150	-1.004	0.150	-1.148	0.250	-1.276
0.590	-0.245	0.200	-1.041	0.210	-1.127	0.400	-0.934
0.630	-0.222	0.250	-1.163	0.250	-1.074	0.490	-0.766
0.700	-0.183	0.260	-1.049	0.340	-1.157	0.580	-0.732
0.750	-0.296	0.280	-1.129	0.370	-1.161	0.650	-0.700
0.810	-0.295	0.290	-1.129	0.400	-1.116	0.700	-0.679
0.840	-0.230	0.310	-1.099	0.410	-1.655**	0.750	-0.415
0.900	-0.211	0.320	-1.078	0.430	-1.180	0.800	-0.289
0.960	-0.121	0.340	-1.079	0.440	-1.122	0.830	-0.193
		0.350	-0.555**	0.460	-1.164	0.900	-0.106
		0.370	-1.029	0.490	-1.032	0.960	-0.030
		0.380	-1.155	0.500	-0.897		
		0.400	-1.064	0.520	-0.690		
		0.410	-0.974	0.540	-0.649		
		0.430	-0.719	0.550	-0.589		
		0.440	-0.561	0.580	-0.563		
		0.460	-0.675	0.600	-0.558		
		0.470	-0.533	0.610	-0.544		
		0.490	-0.532	0.650	2.304**		
		0.500	-0.528	0.700	-0.538		
		0.520	-0.530	0.750	-0.620		
		0.530	-0.484	0.820	-0.418		
		0.550	-0.521	0.890	-0.280		
		0.560	-0.490	0.900	-0.289		
		0.580	-0.478	0.960	-0.179		
		0.590	-0.507				
		0.600	-0.517				
		0.640	-0.373				
		0.700	-0.385				
		0.750	-0.016**				
		0.820	-0.216				
		0.870	-0.277				
		0.930	-0.215				
		0.960	-0.207				
			Lower Surface				
0.020	-0.732	0.020	-0.146	0.020	-0.099	0.020	0.170
0.110	-0.041	0.060	0.081	0.060	0.229	0.060	2.012**
0.230	0.003	0.090	0.037	0.090	1.528**	0.110	0.180
0.400	-0.037	0.120	0.192	0.120	-0.190	0.250	0.025
0.490	-0.047	0.200	0.000	0.200	-0.101	0.400	-0.042
0.630	2.312**	0.260	0.008	0.250	0.073	0.490	-0.165
0.750	-0.024	0.400	-0.041	0.400	-0.049	0.580	-0.224
0.850	0.075	0.490	-0.110	0.490	-0.014	0.650	-0.085
0.900	0.148	0.580	-0.119	0.580	-0.121	0.750	0.123
0.960	0.098	0.640	0.050	0.650	-0.039	0.830	0.322
		0.750	0.187	0.750	0.095	0.900	0.346
		0.870	0.193	0.890	0.253	0.960	0.251
		0.930	0.125	0.930	0.200		
		0.960	0.051	0.960	-1.907**		
CN =	0.440		0.607		0.727		0.757

Table F-2. Continued.

Flight 225, Wing sweep = 26°, Time = 11-51-10-000, MINF = 0.847, Camber = 10/2, ALPT = 11.03, BETA = -0.41, QINF = 292.0, RNPU = 2.3E+06, CNWP = 0.2847

η = 0.93		0.76		0.59		0.40	
			Upper Surface				
x/c	CP	*x/c*	CP	*x/c*	CP	*x/c*	CP
0.020	0.095	0.000	0.789	0.000	3.821**	0.010	-0.519
0.060	-0.287	0.020	-0.240	0.020	-0.044	0.020	-0.274
0.110	-0.724	0.040	-0.150	0.060	-3.847**	0.060	-0.851
0.200	-1.072	0.060	-0.525	0.090	-0.759	0.110	-1.135
0.230	-0.827	0.090	-0.712	0.110	-0.995	0.140	-1.385
0.400	-0.535	0.130	-0.867	0.130	-1.099	0.190	-1.993**
0.490	-0.379	0.150	-1.114	0.150	-1.298	0.250	-1.064
0.590	-0.346	0.200	-1.125	0.210	-1.275	0.400	-0.892
0.630	-0.278	0.250	-0.829	0.250	-0.787	0.490	-0.774
0.700	-0.227	0.260	-0.668	0.340	-0.744	0.580	-0.708
0.750	-0.279	0.280	-0.730	0.370	-0.738	0.650	-0.571
0.810	-0.264	0.290	-0.712	0.400	-0.717	0.700	-0.559
0.840	-0.228	0.310	-0.692	0.410	-1.681**	0.750	-0.468
0.900	-0.227	0.320	-0.673	0.430	-0.675	0.800	-0.452
0.960	-0.205	0.340	-0.634	0.440	-0.628	0.830	-0.435
		0.350	-0.391**	0.460	-0.665	0.900	-0.307
		0.370	-0.592	0.490	-0.554	0.960	-0.233
		0.380	-0.695	0.500	-0.656		
		0.400	-0.649	0.520	-0.601		
		0.410	-0.654	0.540	-0.610		
		0.430	-0.621	0.550	-0.559		
		0.440	-0.486	0.580	-0.540		
		0.460	-0.660	0.600	-0.544		
		0.470	-0.548	0.610	-0.518		
		0.490	-0.555	0.650	2.337**		
		0.500	-0.544	0.700	-0.472		
		0.520	-0.588	0.750	-0.631		
		0.530	-0.507	0.820	-0.389		
		0.550	-0.599	0.890	-0.340		
		0.560	-0.541	0.900	-0.324		
		0.580	-0.540	0.960	-0.266		
		0.590	-0.560				
		0.600	-0.577				
		0.640	-0.433				
		0.700	-0.445				
		0.750	-0.025**				
		0.820	-0.291				
		0.870	-0.283				
		0.930	-0.322				
		0.960	-0.295				
			Lower Surface				
0.020	-0.238	0.020	-0.139	0.020	0.122	0.020	0.380
0.110	0.019	0.060	0.230	0.060	0.355	0.060	2.040**
0.230	0.044	0.090	0.131	0.090	1.549**	0.110	0.279
0.400	-0.009	0.120	0.186	0.120	-0.070	0.250	0.107
0.490	-0.034	0.200	0.040	0.200	-0.026	0.400	0.020
0.630	2.345**	0.260	0.066	0.250	0.156	0.490	-0.116
0.750	-0.070	0.400	-0.009	0.400	-0.001	0.580	-0.183
0.850	0.022	0.490	-0.082	0.490	-0.019	0.650	-0.080
0.900	0.106	0.580	-0.123	0.580	-0.117	0.750	0.104
0.960	0.028	0.640	0.048	0.650	-0.064	0.830	0.297
		0.750	0.169	0.750	0.091	0.900	0.315
		0.870	0.205	0.890	0.203	0.960	0.175
		0.930	0.099	0.930	0.141		
		0.960	0.024	0.960	-1.938**		
CN =	0.434		0.614		0.673		0.811

Table F-2. Continued.

Flight 225, Wing sweep = 26°, Time = 11-51-17-500, MINF = 0.844, Camber = 10/2, ALPT = 12.22, BETA = 0.17, QINF = 301.6, RNPU = 2.4E+06, CNWP = 0.2170

η = 0.93		0.76		0.59		0.40	
			Upper Surface				
x/c	CP	*x/c*	CP	*x/c*	CP	*x/c*	CP
0.020	-0.016	0.000	0.872	0.000	3.621**	0.010	-0.708
0.060	-0.394	0.020	-0.406	0.020	-0.229	0.020	-0.688
0.110	-0.731	0.040	-0.254	0.060	-3.803**	0.060	-0.917
0.200	-0.652	0.060	-0.651	0.090	-0.853	0.110	-1.200
0.230	-0.382	0.090	-0.831	0.110	-1.101	0.140	-1.221
0.400	-0.433	0.130	-0.973	0.130	-1.185	0.190	-2.007**
0.490	-0.393	0.150	-1.131	0.150	-0.977	0.250	-1.005
0.590	-0.404	0.200	-0.710	0.210	-0.855	0.400	-0.915
0.630	-0.350	0.250	-0.718	0.250	-0.716	0.490	-0.800
0.700	-0.295	0.260	-0.590	0.340	-0.709	0.580	-0.742
0.750	-0.333	0.280	-0.641	0.370	-0.695	0.650	-0.668
0.810	-0.352	0.290	-0.624	0.400	-0.691	0.700	-0.668
0.840	-0.306	0.310	-0.610	0.410	-1.706**	0.750	-0.573
0.900	-0.286	0.320	-0.598	0.430	-0.687	0.800	-0.573
0.960	-0.272	0.340	-0.578	0.440	-0.637	0.830	-0.534
		0.350	-0.351**	0.460	-0.650	0.900	-0.445
		0.370	-0.519	0.490	-0.555	0.960	-0.390
		0.380	-0.622	0.500	-0.639		
		0.400	-0.506	0.520	-0.586		
		0.410	-0.611	0.540	-0.595		
		0.430	-0.559	0.550	-0.546		
		0.440	-0.469	0.580	-0.544		
		0.460	-0.619	0.600	-0.540		
		0.470	-0.515	0.610	-0.541		
		0.490	-0.518	0.650	2.185**		
		0.500	-0.520	0.700	-0.574		
		0.520	-0.535	0.750	-0.637		
		0.530	-0.488	0.820	-0.515		
		0.550	-0.539	0.890	-0.437		
		0.560	-0.491	0.900	-0.418		
		0.580	-0.487	0.960	-0.356		
		0.590	-0.520				
		0.600	-0.524				
		0.640	-0.414				
		0.700	-0.439				
		0.750	-0.032**				
		0.820	-0.308				
		0.870	-0.310				
		0.930	-0.357				
		0.960	-0.341				
			Lower Surface				
0.020	-0.098	0.020	-0.113	0.020	0.330	0.020	0.528
0.110	0.074	0.060	0.331	0.060	0.431	0.060	1.897**
0.230	0.065	0.090	0.231	0.090	1.422**	0.110	0.367
0.400	0.021	0.120	0.300	0.120	-0.016	0.250	0.178
0.490	-0.015	0.200	0.060	0.200	-0.043	0.400	0.073
0.630	2.192**	0.260	0.124	0.250	0.205	0.490	-0.057
0.750	-0.037	0.400	0.044	0.400	0.025	0.580	-0.166
0.850	0.018	0.490	-0.068	0.490	-0.037	0.650	-0.082
0.900	0.082	0.580	-0.101	0.580	-0.095	0.750	0.130
0.960	-0.015	0.640	0.043	0.650	-0.051	0.830	0.286
		0.750	0.156	0.750	0.073	0.900	0.307
		0.870	0.163	0.890	0.193	0.960	0.162
		0.930	0.077	0.930	0.125		
		0.960	-0.018	0.960	-1.954**		
CN =	0.411		0.610		0.680		0.895

Table F-2. Continued.

Flight 216, Wing sweep = 26°, Time = 10-50-51-000, MINF = 0.853, Camber = 10/2, ALPT = 6.04, BETA = -0.27, QINF = 303.7, RNPU = 2.4E+06, CNWP = 0.3840

η = 0.93		0.76		0.59		0.40	
			Upper Surface				
x/c	CP	*x/c*	CP	*x/c*	CP	*x/c*	CP
0.020	0.450	0.000	0.319	0.000	0.258**	0.010	0.185
0.060	-0.007	0.020	0.275	0.020	0.436	0.020	0.058
0.110	-0.350	0.040	0.296	0.060	0.389**	0.060	-0.533
0.200	-1.049	0.060	-0.156	0.090	-0.357	0.110	-0.819
0.230	-0.940	0.090	-0.339	0.110	-0.610	0.140	-1.138
0.400	-0.740	0.130	-0.594	0.130	-1.963**	0.190	-1.963**
0.490	-0.135	0.150	-0.869	0.150	-1.026	0.250	-1.096
0.590	-0.157	0.200	-0.954	0.210	-1.000	0.400	-0.807
0.630	-0.191	0.250	-1.015	0.250	-0.989	0.490	-0.539
0.700	-0.154	0.260	-0.948	0.340	-1.001	0.580	-0.503
0.750	-0.237	0.280	-0.986	0.370	-0.975	0.650	-0.537
0.810	-0.208	0.290	-0.978	0.400	-0.970	0.700	-0.514
0.840	-0.215	0.310	-0.933	0.410	-2.947**	0.750	-0.561
0.900	-0.149	0.320	-0.939	0.430	-0.993	0.800	-0.315
0.960	-0.046	0.340	-0.931	0.440	-0.958	0.830	-0.248
		0.350	-0.473**	0.460	-0.977	0.900	-0.109
		0.370	-0.912	0.490	-0.900	0.960	0.030
		0.380	-0.989	0.500	-1.002		
		0.400	-0.892	0.520	-0.962		
		0.410	-0.962	0.540	-0.954		
		0.430	-0.912	0.550	-0.689		
		0.440	-0.853	0.580	-0.485		
		0.460	-0.981	0.600	-0.384		
		0.470	-0.929	0.610	-0.310		
		0.490	-0.918	0.650	-0.522		
		0.500	-0.923	0.700	-0.219		
		0.520	-0.905	0.750	-0.319		
		0.530	-0.893	0.820	-0.243		
		0.550	-0.720	0.890	-0.076		
		0.560	-0.434	0.900	-0.047		
		0.580	-0.340	0.960	0.084		
		0.590	-0.307				
		0.600	-0.263				
		0.640	-0.136				
		0.700	-0.153				
		0.750	-0.021**				
		0.820	-0.190				
		0.870	-0.182				
		0.930	-0.073				
		0.960	-0.009				
			Lower Surface				
0.020	-0.666	0.020	-0.828	0.020	-0.870	0.020	-0.400
0.110	-0.457	0.060	-0.356	0.060	-0.118	0.060	-0.030
0.230	-0.062	0.090	-0.182	0.090	-0.051	0.110	-0.109
0.400	-0.019	0.120	-0.066	0.120	-0.309	0.250	-0.130
0.490	-0.022	0.200	-0.062	0.200	-0.117	0.400	-0.179
0.630	4.284**	0.260	-0.083	0.250	-0.064	0.490	-0.262
0.750	0.017	0.400	-0.086	0.400	-0.141	0.580	-0.293
0.850	0.075	0.490	-0.116	0.490	-0.044	0.650	-0.139
0.900	0.153	0.580	-0.106	0.580	-0.166	0.750	0.125
0.960	0.123	0.640	0.055	0.650	-0.029	0.830	0.276
		0.750	0.169	0.750	-0.036	0.900	0.326
		0.870	0.207	0.890	0.284	0.960	0.261
		0.930	0.210	0.930	0.256		
		0.960	0.178	0.960	0.438		
CN =	0.311		0.468		0.522		0.539

Table F-2. Continued.

Flight 216, Wing sweep = 26°, Time = 10-52-32-500, MINF = 0.851, Camber = 5/10, ALPT = 4.00, BETA = -0.18, QINF = 301.0, RNPU = 2.4E+06, CNWP = 0.2904

η = 0.93		0.76		0.59		0.40	
			Upper Surface				
x/c	CP	*x/c*	CP	*x/c*	CP	*x/c*	CP
0.020	0.309	0.000	0.587	0.000	0.219**	0.010	-0.156
0.060	-0.041	0.020	0.092	0.020	0.191	0.020	-0.127
0.110	-0.308	0.040	0.163	0.060	0.344**	0.060	-0.495
0.200	-0.747	0.060	-0.213	0.090	-0.328	0.110	-0.629
0.230	-0.394	0.090	-0.303	0.110	-0.531	0.140	-0.896
0.400	-0.232	0.130	-0.467	0.130	-1.974**	0.190	-1.974**
0.490	-0.240	0.150	-0.682	0.150	-0.796	0.250	-0.663
0.590	-0.298	0.200	-0.698	0.210	-0.775	0.400	-0.389
0.630	-0.328	0.250	-0.775	0.250	-0.753	0.490	-0.354
0.700	-0.409	0.260	-0.699	0.340	-0.388	0.580	-0.372
0.750	-0.624	0.280	-0.722	0.370	-0.322	0.650	-0.425
0.810	-0.606	0.290	-0.722	0.400	-0.310	0.700	-0.405
0.840	-0.625	0.310	-0.678	0.410	-2.967**	0.750	-0.523
0.900	-0.294	0.320	-0.656	0.430	-0.323	0.800	-1.104
0.960	-0.293	0.340	-0.300	0.440	-0.298	0.830	-0.591
		0.350	-0.191**	0.460	-0.319	0.900	-0.411
		0.370	-0.217	0.490	-0.256	0.960	-0.424
		0.380	-0.255	0.500	-0.334		
		0.400	-0.201	0.520	-0.311		
		0.410	-0.274	0.540	-0.317		
		0.430	-0.242	0.550	-0.307		
		0.440	-0.210	0.580	-0.311		
		0.460	-0.305	0.600	-0.318		
		0.470	-0.283	0.610	-0.332		
		0.490	-0.291	0.650	-0.806		
		0.500	-0.308	0.700	-0.521		
		0.520	-0.312	0.750	-0.616		
		0.530	-0.308	0.820	-0.750		
		0.550	-0.388	0.890	-0.415		
		0.560	-0.330	0.900	-0.485		
		0.580	-0.315	0.960	-0.402		
		0.590	-0.368				
		0.600	-0.371				
		0.640	-0.542				
		0.700	-0.524				
		0.750	-0.014**				
		0.820	-0.560				
		0.870	-0.347				
		0.930	-0.324				
		0.960	-0.327				
			Lower Surface				
0.020	-1.045	0.020	-1.170	0.020	-1.027	0.020	-0.197
0.110	-0.183	0.060	-0.211	0.060	-0.136	0.060	-0.009
0.230	-0.037	0.090	-0.209	0.090	-0.160	0.110	-0.190
0.400	-0.002	0.120	-0.129	0.120	-0.461	0.250	-0.234
0.490	0.036	0.200	-0.048	0.200	-0.106	0.400	-0.195
0.630	4.330**	0.260	-0.127	0.250	-0.144	0.490	-0.198
0.750	0.158	0.400	-0.046	0.400	-0.101	0.580	-0.119
0.850	0.209	0.490	-0.027	0.490	-0.030	0.650	0.081
0.900	0.292	0.580	0.037	0.580	-0.001	0.750	0.318
0.960	0.105	0.640	0.261	0.650	-0.030	0.830	0.418
		0.750	0.340	0.750	-0.015	0.900	0.488
		0.870	0.358	0.890	0.438	0.960	0.323
		0.930	0.302	0.930	0.361		
		0.960	0.194	0.960	0.479		
CN =	0.385		0.484		0.469		0.515

Table F-2. Continued.

Flight 216, Wing sweep = 26°, Time = 10-53-13-500, MINF = 0.849, Camber = 5/10, ALPT = 4.01, BETA = -0.27, QINF = 299.9, RNPU = 2.4E+06, CNWP = 0.2939

η = 0.93		0.76		0.59		0.40	
			Upper Surface				
x/c	CP	*x/c*	CP	*x/c*	CP	*x/c*	CP
0.020	0.302	0.000	0.581	0.000	0.213**	0.010	-0.146
0.060	-0.042	0.020	0.054	0.020	0.192	0.020	-0.128
0.110	-0.321	0.040	0.160	0.060	0.400**	0.060	-0.497
0.200	-0.750	0.060	-0.199	0.090	-0.335	0.110	-0.631
0.230	-0.303	0.090	-0.305	0.110	-0.533	0.140	-0.900
0.400	-0.225	0.130	-0.469	0.130	-1.981**	0.190	-1.981**
0.490	-0.222	0.150	-0.685	0.150	-0.799	0.250	-0.665
0.590	-0.284	0.200	-0.707	0.210	-0.778	0.400	-0.384
0.630	-0.333	0.250	-0.772	0.250	-0.756	0.490	-0.355
0.700	-0.410	0.260	-0.701	0.340	-0.360	0.580	-0.373
0.750	-0.689	0.280	-0.733	0.370	-0.323	0.650	-0.431
0.810	-0.590	0.290	-0.716	0.400	-0.267	0.700	-0.417
0.840	-0.576	0.310	-0.613	0.410	-2.977**	0.750	-0.525
0.900	-0.290	0.320	-0.522	0.430	-0.324	0.800	-1.077
0.960	-0.295	0.340	-0.267	0.440	-0.299	0.830	-0.602
		0.350	-0.171**	0.460	-0.325	0.900	-0.431
		0.370	-0.222	0.490	-0.257	0.960	-0.426
		0.380	-0.270	0.500	-0.345		
		0.400	-0.212	0.520	-0.312		
		0.410	-0.289	0.540	-0.319		
		0.430	-0.255	0.550	-0.321		
		0.440	-0.214	0.580	-0.312		
		0.460	-0.306	0.600	-0.319		
		0.470	-0.304	0.610	-0.333		
		0.490	-0.304	0.650	-0.813		
		0.500	-0.314	0.700	-0.563		
		0.520	-0.321	0.750	-0.622		
		0.530	-0.316	0.820	-0.740		
		0.550	-0.371	0.890	-0.436		
		0.560	-0.344	0.900	-0.497		
		0.580	-0.316	0.960	-0.421		
		0.590	-0.356				
		0.600	-0.377				
		0.640	-0.544				
		0.700	-0.529				
		0.750	-0.010**				
		0.820	-0.558				
		0.870	-0.371				
		0.930	-0.322				
		0.960	-0.328				
			Lower Surface				
0.020	-1.041	0.020	-1.167	0.020	-1.031	0.020	-0.198
0.110	-0.177	0.060	-0.216	0.060	-0.137	0.060	-0.009
0.230	-0.049	0.090	-0.210	0.090	-0.161	0.110	-0.150
0.400	-0.005	0.120	-0.130	0.120	-0.454	0.250	-0.235
0.490	0.033	0.200	-0.045	0.200	-0.103	0.400	-0.196
0.630	4.345**	0.260	-0.127	0.250	-0.138	0.490	-0.184
0.750	0.158	0.400	-0.043	0.400	-0.101	0.580	-0.115
0.850	0.213	0.490	-0.027	0.490	-0.030	0.650	0.089
0.900	0.290	0.580	0.037	0.580	-0.002	0.750	0.319
0.960	0.113	0.640	0.250	0.650	-0.030	0.830	0.419
		0.750	0.325	0.750	-0.015	0.900	0.484
		0.870	0.369	0.890	0.432	0.960	0.324
		0.930	0.303	0.930	0.362		
		0.960	0.195	0.960	0.481		
CN =	0.375		0.483		0.472		0.523

Table F-2. Continued.

Flight 216, Wing sweep = 26°, Time = 10-54-30-500, MINF = 0.851, Camber = 10/10, ALPT = 4.03, BETA = -0.01, QINF = 301.2, RNPU = 2.4E+06, CNWP = 0.3363

η = 0.93		0.76		0.59		0.40	
			Upper Surface				
x/c	CP	*x/c*	CP	*x/c*	CP	*x/c*	CP
0.020	0.531	0.000	0.151	0.000	0.073**	0.010	0.376
0.060	0.076	0.020	0.300	0.020	0.550	0.020	0.247
0.110	-0.273	0.040	0.413	0.060	0.509**	0.060	-0.306
0.200	-0.934	0.060	-0.057	0.090	-0.244	0.110	-0.608
0.230	-0.834	0.090	-0.233	0.110	-0.520	0.140	-1.037
0.400	-0.126	0.130	-0.486	0.130	-1.972**	0.190	-1.972**
0.490	-0.172	0.150	-0.790	0.150	-0.937	0.250	-0.773
0.590	-0.274	0.200	-0.876	0.210	-0.918	0.400	-0.388
0.630	-0.331	0.250	-0.915	0.250	-0.867	0.490	-0.353
0.700	-0.355	0.260	-0.841	0.340	-0.837	0.580	-0.370
0.750	-0.774	0.280	-0.859	0.370	-0.813	0.650	-0.418
0.810	-0.672	0.290	-0.839	0.400	-0.419	0.700	-0.404
0.840	-0.683	0.310	-0.787	0.410	-2.009**	0.750	-0.522
0.900	-0.248	0.320	-0.807	0.430	-0.351	0.800	-1.085
0.960	-0.250	0.340	-0.795	0.440	-0.301	0.830	-0.589
		0.350	-0.423**	0.460	-0.295	0.900	-0.392
		0.370	-0.762	0.490	-0.232	0.960	-0.413
		0.380	-0.829	0.500	-0.305		
		0.400	-0.603	0.520	-0.276		
		0.410	-0.395	0.540	-0.282		
		0.430	-0.241	0.550	-0.282		
		0.440	-0.196	0.580	-0.292		
		0.460	-0.233	0.600	-0.307		
		0.470	-0.191	0.610	-0.290		
		0.490	-0.202	0.650	-0.825		
		0.500	-0.209	0.700	-0.534		
		0.520	-0.218	0.750	-0.589		
		0.530	-0.221	0.820	-0.690		
		0.550	-0.260	0.890	-0.374		
		0.560	-0.249	0.900	-0.426		
		0.580	-0.262	0.960	-0.355		
		0.590	-0.309				
		0.600	-0.316				
		0.640	-0.516				
		0.700	-0.493				
		0.750	-0.031**				
		0.820	-0.521				
		0.870	-0.372				
		0.930	-0.286				
		0.960	-0.289				
			Lower Surface				
0.020	-0.774	0.020	-0.976	0.020	-1.041	0.020	-0.892
0.110	-0.612	0.060	-0.490	0.060	-0.549	0.060	-0.004
0.230	-0.058	0.090	-0.376	0.090	-0.372	0.110	-0.304
0.400	0.066	0.120	-0.251	0.120	-0.485	0.250	-0.193
0.490	0.078	0.200	-0.065	0.200	-0.129	0.400	-0.187
0.630	1.909**	0.260	-0.140	0.250	-0.071	0.490	-0.190
0.750	0.139	0.400	-0.019	0.400	-0.070	0.580	-0.113
0.850	0.175	0.490	0.004	0.490	-0.040	0.650	0.075
0.900	0.216	0.580	0.064	0.580	0.007	0.750	0.304
0.960	0.093	0.640	0.209	0.650	-0.057	0.830	0.427
		0.750	0.244	0.750	-0.029	0.900	0.468
		0.870	0.245	0.890	0.381	0.960	0.329
		0.930	0.238	0.930	0.303		
		0.960	0.148	0.960	0.452		
CN =	0.358		0.461		0.478		0.511

Table F-2. Continued.

Flight 216, Wing sweep = 26°, Time = 10-54-43-000, MINF = 0.850, Camber = 10/10, ALPT = 4.08, BETA = -0.44, QINF = 301.1, RNPU = 2.4E+06, CNWP = 0.3311

η = 0.93		0.76		0.59		0.40	
			Upper Surface				
x/c	CP	*x/c*	CP	*x/c*	CP	*x/c*	CP
0.020	0.526	0.000	0.150	0.000	0.013**	0.010	0.350
0.060	0.067	0.020	0.371	0.020	0.544	0.020	0.242
0.110	-0.289	0.040	0.397	0.060	0.542**	0.060	-0.312
0.200	-0.952	0.060	-0.063	0.090	-0.260	0.110	-0.633
0.230	-0.858	0.090	-0.256	0.110	-0.535	0.140	-1.078
0.400	-0.131	0.130	-0.504	0.130	-1.978**	0.190	-1.978**
0.490	-0.181	0.150	-0.803	0.150	-0.942	0.250	-0.779
0.590	-0.294	0.200	-0.877	0.210	-0.917	0.400	-0.393
0.630	-0.332	0.250	-0.918	0.250	-0.872	0.490	-0.358
0.700	-0.356	0.260	-0.838	0.340	-0.857	0.580	-0.386
0.750	-0.783	0.280	-0.864	0.370	-0.834	0.650	-0.434
0.810	-0.756	0.290	-0.847	0.400	-0.439	0.700	-0.414
0.840	-0.769	0.310	-0.806	0.410	-2.015**	0.750	-0.534
0.900	-0.253	0.320	-0.810	0.430	-0.349	0.800	-1.049
0.960	-0.248	0.340	-0.799	0.440	-0.291	0.830	-0.558
		0.350	-0.439**	0.460	-0.306	0.900	-0.406
		0.370	-0.779	0.490	-0.230	0.960	-0.404
		0.380	-0.848	0.500	-0.301		
		0.400	-0.598	0.520	-0.281		
		0.410	-0.400	0.540	-0.294		
		0.430	-0.269	0.550	-0.293		
		0.440	-0.193	0.580	-0.298		
		0.460	-0.250	0.600	-0.298		
		0.470	-0.229	0.610	-0.309		
		0.490	-0.215	0.650	-0.801		
		0.500	-0.230	0.700	-0.539		
		0.520	-0.231	0.750	-0.598		
		0.530	-0.230	0.820	-0.754		
		0.550	-0.283	0.890	-0.351		
		0.560	-0.266	0.900	-0.415		
		0.580	-0.259	0.960	-0.325		
		0.590	-0.306				
		0.600	-0.331				
		0.640	-0.510				
		0.700	-0.484				
		0.750	-0.025**				
		0.820	-0.537				
		0.870	-0.362				
		0.930	-0.299				
		0.960	-0.301				
			Lower Surface				
0.020	-0.780	0.020	-0.971	0.020	-0.891	0.020	-0.891
0.110	-0.583	0.060	-0.462	0.060	-0.542	0.060	-0.013
0.230	-0.075	0.090	-0.358	0.090	-0.354	0.110	-0.274
0.400	0.039	0.120	-0.227	0.120	-0.465	0.250	-0.192
0.490	0.069	0.200	-0.067	0.200	-0.127	0.400	-0.184
0.630	1.904**	0.260	-0.138	0.250	-0.068	0.490	-0.195
0.750	0.123	0.400	-0.024	0.400	-0.075	0.580	-0.118
0.850	0.166	0.490	-0.001	0.490	-0.041	0.650	0.085
0.900	0.231	0.580	0.059	0.580	0.024	0.750	0.304
0.960	0.096	0.640	0.200	0.650	-0.041	0.830	0.414
		0.750	0.254	0.750	-0.019	0.900	0.481
		0.870	0.272	0.890	0.383	0.960	0.324
		0.930	0.237	0.930	0.320		
		0.960	0.157	0.960	0.443		
CN =	0.367		0.472		0.491		0.520

Table F-2. Concluded.

Flight 215, Wing sweep = 26°, Time = 10-5-45-500, MINF = 0.850, Camber = 10/15, ALPT = 4.03, BETA = -0.33, QINF = 255.6, RNPU = 2.0E+06, CNWP = 0.2065

η = 0.93		0.76		0.59		0.40	
			Upper Surface				
x/c	CP	*x/c*	CP	*x/c*	CP	*x/c*	CP
0.020	-0.214	0.000	-0.517	0.000	-0.739**	0.010	-0.399
0.060	-0.656	0.020	-0.410	0.020	-0.184	0.020	0.032
0.110	-1.027	0.040	-0.336	0.060	0.017**	0.060	-1.055
0.200	-1.686	0.060	-0.842	0.090	-0.994	0.110	-0.856
0.230	-1.615	0.090	-1.004	0.110	-1.279	0.140	-1.752
0.400	-0.867	0.130	-1.245	0.130	-1.484	0.190	-1.976**
0.490	-0.896	0.150	-1.554	0.150	-1.685	0.250	-0.982
0.590	-1.014	0.200	-1.620	0.210	-1.119	0.400	-1.151
0.630	-1.045	0.250	-1.660	0.250	-1.613	0.490	-1.101
0.700	-1.119	0.260	-1.580	0.340	-1.599	0.580	-1.131
0.750	-1.279	0.280	-1.086	0.370	-1.603	0.650	-1.188
0.810	-1.242	0.290	-1.588	0.400	-1.395	0.700	-1.170
0.840	-1.219	0.310	-1.553	0.410	-3.143**	0.750	-0.758
0.900	-1.155	0.320	-1.553	0.430	-1.168	0.800	-1.401
0.960	-1.180	0.340	-1.550	0.440	-1.092	0.830	-1.264
		0.350	-1.149**	0.460	-1.080	0.900	-1.212
		0.370	-0.998	0.490	-0.992	0.960	-1.236
		0.380	-1.599	0.500	-1.045		
		0.400	-1.649	0.520	-1.035		
		0.410	-1.544	0.540	-1.044		
		0.430	-1.193	0.550	-1.036		
		0.440	-1.041	0.580	-1.043		
		0.460	-0.502	0.600	-0.502		
		0.470	-0.952	0.610	-1.045		
		0.490	-0.953	0.650	-1.647		
		0.500	-0.946	0.700	-1.270		
		0.520	-0.939	0.750	-1.348		
		0.530	-0.938	0.820	-1.331		
		0.550	-0.993	0.890	-1.211		
		0.560	-0.968	0.900	-1.295		
		0.580	-0.956	0.960	-1.219		
		0.590	-0.483				
		0.600	-1.039				
		0.640	-1.217				
		0.700	-1.210				
		0.750	-0.738**				
		0.820	-1.280				
		0.870	-1.135				
		0.930	-1.121				
		0.960	-1.124				
			Lower Surface				
0.020	-1.968	0.020	-1.483	0.020	-1.488	0.020	-1.087
0.110	-0.964	0.060	-1.059	0.060	-1.169	0.060	-0.728
0.230	-0.783	0.090	-1.032	0.090	-0.971	0.110	-0.440
0.400	-0.671	0.120	-0.951	0.120	-1.170	0.250	-0.885
0.490	-0.609	0.200	-0.779	0.200	-0.839	0.400	-0.321
0.630	3.698**	0.260	-0.825	0.250	-0.209	0.490	-0.820
0.750	-0.537	0.400	-0.688	0.400	-0.732	0.580	-0.711
0.850	-0.513	0.490	-0.651	0.490	-0.753	0.650	-0.491
0.900	-0.440	0.580	-0.580	0.580	-0.591	0.750	-0.304
0.960	-0.638	0.640	-0.437	0.650	-0.769	0.830	-0.216
		0.750	-0.394	0.750	-0.735	0.900	-0.150
		0.870	-0.328	0.890	-0.253	0.960	-0.310
		0.930	-0.387	0.930	-0.327		
		0.960	-0.506	0.960	-0.172		
CN =	0.449		0.554		0.592		0.596

APPENDIX G

Wing Pressure Coefficients for Nominal Dynamic Pressure of 300 lb/ft^2 and Mach Number of 0.90.

Leading-edge wing sweep is 26°. Table G-1 contains a summary of the data listing in table G-2. The asterisks (*) in table G-2 indicate invalid values. Camber is $\delta_{LE/TE}$. Refer to Nomenclature for definitions.

Table G-1. Summary of data.

Flight	Time	MINF	Camber	ALPT	BETA	QINF	RNPU	CNWP
198	13-56-25-000	0.905	0/2	5.09	0.42	297.8	2.3E+06	0.2701
198	13-56-41-000	0.895	0/2	6.00	0.34	291.2	2.2E+06	0.3247
198	13-56-52-000	0.905	0/2	7.02	-0.22	298.2	2.3E+06	0.3702
198	13-57-6-000	0.899	0/2	8.02	0.55	295.7	2.2E+06	0.4302
198	13-57-20-000	0.901	0/2	8.05	0.26	301.2	2.3E+06	0.4293
198	13-57-40-500	0.901	0/2	9.05	0.42	303.2	2.3E+06	0.4417
198	13-57-45-000	0.898	0/2	9.99	0.36	301.3	2.3E+06	0.4834
226	10-9-29-000	0.900	0/2	6.02	-0.04	292.3	2.2E+06	0.3283
226	10-9-35-000	0.898	0/2	6.02	-0.41	290.1	2.2E+06	0.3213
226	10-9-58-500	0.896	0/2	11.93	-0.70	290.6	2.2E+06	0.3468
211	11-33-56-000	0.896	0/2	5.02	0.02	298.7	2.3E+06	0.3176
211	11-34-26-500	0.896	0/2	7.96	0.45	301.0	2.3E+06	0.4324
211	11-34-41-500	0.923	0/2	9.09	-0.33	339.7	2.5E+06	0.4651
211	11-34-52-500	0.900	0/2	9.87	-0.07	335.9	2.6E+06	0.4729
198	14-1-12-000	0.901	5/2	8.27	0.52	296.5	2.2E+06	0.4358
198	14-1-22-500	0.905	5/2	8.99	0.55	298.5	2.3E+06	0.4474
198	14-1-33-000	0.900	5/2	10.15	0.39	296.1	2.2E+06	0.4739
226	10-7-8-500	0.904	5/2	6.15	-0.38	297.9	2.3E+06	0.3388
226	10-7-21-500	0.902	5/2	7.05	-0.44	297.5	2.3E+06	0.3831
226	10-7-24-000	0.901	5/2	7.03	-0.85	296.4	2.2E+06	0.3873
226	10-7-30-500	0.904	5/2	7.99	-0.67	298.4	2.3E+06	0.4302
226	10-7-40-000	0.903	5/2	12.02	-0.70	304.2	2.3E+06	0.3996
226	10-7-43-000	0.898	5/2	12.15	-0.10	305.7	2.3E+06	0.3509
200	8-21-10-000	0.898	5/6	5.01	0.45	294.2	2.2E+06	0.3343
200	8-21-25-000	0.907	5/6	6.11	0.14	298.6	2.3E+06	0.3882
200	8-21-28-500	0.908	5/6	6.99	0.08	299.1	2.3E+06	0.4526
200	8-21-32-500	0.903	5/6	8.15	0.17	296.9	2.2E+06	0.5111
200	8-21-41-000	0.889	5/6	9.11	0.25	289.3	2.2E+06	0.5676
204	9-33-24-000	0.892	5/6	8.25	-0.36	269.2	2.1E+06	0.5367
204	9-35-23-500	0.901	5/6	9.27	-0.21	275.9	2.1E+06	0.5518

Table G-1. Continued.

Flight	Time	MINF	Camber	ALPT	BETA	QINF	RNPU	CNWP
204	9-35-34-500	0.894	5/6	12.19	0.51	292.8	2.2E+06	0.4976
198	14-4-42-500	0.898	10/2	5.99	0.05	292.9	2.2E+06	0.3341
198	14-4-46-000	0.898	10/2	6.04	-0.16	293.1	2.2E+06	0.3421
198	14-5-4-500	0.903	10/2	6.92	0.23	294.5	2.2E+06	0.3829
198	14-5-13-500	0.902	10/2	7.95	0.57	294.6	2.2E+06	0.4405
198	14-5-20-500	0.898	10/2	7.99	0.52	293.8	2.2E+06	0.4551
198	14-5-35-500	0.900	10/2	9.05	0.76	297.3	2.3E+06	0.4444
198	14-5-41-000	0.901	10/2	10.08	0.21	301.9	2.3E+06	0.4682
198	14-5-53-500	0.896	10/2	11.04	0.26	307.8	2.3E+06	0.3301
211	11-28-12-500	0.899	10/2	6.00	0.05	300.1	2.3E+06	0.3627
211	11-29-4-500	0.903	10/2	8.06	-0.41	297.1	2.3E+06	0.4635
211	11-29-11-000	0.907	10/2	8.96	0.37	301.9	2.3E+06	0.4647
226	9-38-4-500	0.906	10/2	5.96	0.19	295.9	2.2E+06	0.3462
226	9-38-25-500	0.907	10/2	7.09	0.25	295.8	2.2E+06	0.3933
226	9-38-41-500	0.894	10/2	12.06	0.19	297.7	2.3E+06	0.2948
211	11-25-20-500	0.898	5/10	4.04	0.14	299.5	2.3E+06	0.3072
211	11-25-28-000	0.900	5/11	5.00	-0.36	300.8	2.3E+06	0.3527
211	11-25-34-500	0.897	5/10	6.01	0.19	298.2	2.3E+06	0.4057
211	11-25-39-500	0.898	5/10	7.09	-0.21	299.0	2.3E+06	0.4689
211	11-25-44-500	0.894	5/10	8.16	-0.01	297.7	2.3E+06	0.5649
211	11-26-1-500	0.889	5/11	10.22	0.54	311.0	2.4E+06	0.5362
211	11-26-8-000	0.895	5/10	9.92	0.37	332.3	2.5E+06	0.5767
226	10-11-10-000	0.906	5/10	5.05	-0.24	303.6	2.3E+06	0.3583
226	10-11-33-500	0.897	5/10	7.08	-0.27	295.4	2.2E+06	0.4828
201	9-30-23-000	0.893	5/10	4.09	0.57	291.1	2.2E+06	0.4156
201	9-30-39-500	0.899	5/10	6.15	0.14	290.3	2.2E+06	0.5217
201	9-30-47-000	0.888	5/10	8.98	0.31	285.9	2.2E+06	0.6378
201	8-40-10-000	0.902	10/10	4.04	0.45	387.2	2.9E+06	0.3596
226	10-2-12-500	0.899	10/10	5.09	0.02	299.1	2.3E+06	0.3417
226	10-2-36-500	0.899	10/10	5.99	-0.21	301.3	2.3E+06	0.4245
226	10-2-57-500	0.902	10/10	7.98	-0.15	308.0	2.3E+06	0.5400
226	10-3-6-500	0.899	10/10	10.23	-0.15	316.8	2.4E+06	0.5804
215	10-6-14-500	0.899	10/15	3.98	-0.24	301.8	2.3E+06	0.2946
215	10-7-7-500	0.898	10/15	4.05	-0.07	298.5	2.3E+06	0.3422
215	10-7-21-000	0.904	10/15	4.07	0.02	302.5	2.3E+06	0.2596
198	14-8-15-000	0.905	0/11	4.07	-0.03	295.2	2.2E+06	0.3235
198	14-8-25-500	0.909	0/10	5.16	0.15	296.5	2.2E+06	0.3633

Table G-1. Concluded.

Flight	Time	MINF	Camber	ALPT	BETA	QINF	RNPU	CNWP
198	14-8-31-000	0.909	0/10	6.15	0.47	296.0	2.2E+06	0.4054
198	14-8-42-500	0.889	0/10	7.06	0.47	283.6	2.2E+06	0.5175
198	14-9-15-000	0.891	0/10	7.95	0.26	293.2	2.2E+06	0.5712
198	14-9-25-000	0.892	0/10	9.21	0.55	303.2	2.3E+06	0.5879
198	14-9-29-000	0.887	0/10	10.01	-0.06	304.7	2.3E+06	0.6142

Table G-2. Listing of data.

Flight 198, Wing sweep = 26°, Time = 13-56-25-000, MINF = 0.905, Camber = 0/2, ALPT = 5.09, BETA = 0.42, QINF = 297.8, RNPU = 2.3E+06, CNWP = 0.2701

η = 0.93		0.76		0.59		0.40	
			Upper Surface				
x/c	CP	*x/c*	CP	*x/c*	CP	*x/c*	CP
0.020	-0.129	0.000	0.915	0.000	-5.473**	0.010	-0.683**
0.060	-0.314	0.020	-0.503**	0.020	-0.310**	0.020	-0.717**
0.110	-0.318	0.040	-0.245	0.060	-1.195**	0.060	-0.648
0.200	-0.407	0.060	-0.473	0.090	-0.569	0.110	-0.660
0.230	-0.357	0.090	-0.459	0.110	-0.618	0.140	1.864**
0.400	-0.471	0.130	-0.470	0.130	-0.540	0.190	-5.339**
0.490	-0.404	0.150	-0.484	0.150	-0.527	0.250	-0.722
0.590	-0.322	0.200	-0.409	0.210	-0.601	0.400	-0.571
0.630	-0.167	0.250	-0.577	0.250	-0.584	0.490	-0.463
0.700	-0.117	0.260	-0.507	0.340	-0.668	0.580	-0.421
0.750	-0.169	0.280	-0.571	0.370	-0.660	0.650	-0.440
0.810	-0.202	0.290	-0.573	0.400	-0.661	0.700	-0.425
0.840	-0.154	0.310	-0.523	0.410	-0.616	0.750	-0.489
0.900	-0.046	0.320	-0.512	0.430	-0.650	0.800	-0.671
0.960	0.035	0.340	-0.546	0.440	-0.642	0.830	-0.640
		0.350	-0.355**	0.460	-0.663	0.900	-0.061
		0.370	-0.543	0.490	-0.564	0.960	0.005
		0.380	-0.565	0.500	-0.579		
		0.400	-0.474	0.520	-0.537		
		0.410	-0.576	0.540	-0.558		
		0.430	-0.568	0.550	-0.538		
		0.440	-0.512	0.580	-0.532		
		0.460	-0.660	0.600	-0.514		
		0.470	-0.587	0.610	-0.402		
		0.490	-0.581	0.650	-2.595**		
		0.500	-0.584	0.700	-0.504		
		0.520	-0.580	0.750	-0.548		
		0.530	-0.565	0.820	-0.395		
		0.550	-0.577	0.890	-0.009		
		0.560	-0.588	0.900	0.019		
		0.580	-0.569	0.960	0.064		
		0.590	-0.607				
		0.600	-0.654				
		0.640	-2.432**				
		0.700	-0.559				
		0.750	-0.096				
		0.820	-2.607**				
		0.870	-0.075				
		0.930	0.012				
		0.960	0.074				
			Lower Surface				
0.020	-0.467	0.020	-0.266	0.020	-0.071	0.020	0.347
0.110	-0.459	0.060	-0.060	0.060	0.058	0.060	3.415**
0.230	-0.434	0.090	-0.161	0.090	-0.061	0.110	-0.088
0.400	-0.091	0.120	-0.259	0.120	-0.447	0.250	-0.221
0.490	-0.127	0.200	-0.229	0.200	-0.291	0.400	-0.288
0.630	3.459**	0.260	-0.343	0.250	-0.327	0.490	-0.415
0.750	0.053	0.400	-2.625**	0.400	-0.328	0.580	-0.534
0.850	0.167	0.490	-0.440	0.490	-0.030	0.650	-0.238
0.900	0.220	0.580	-0.048	0.580	-0.516	0.750	0.028
0.960	0.196	0.640	0.284	0.650	0.049	0.830	0.169
		0.750	0.186	0.750	-0.009	0.900	0.311
		0.870	0.262	0.890	********	0.960	0.271
		0.930	0.266	0.930	0.287		
		0.960	0.200	0.960	-2.624**		
CN =	0.153		0.302		0.339		0.349

Table G-2. Continued.

Flight 198, Wing sweep = 26°, Time = 13-56-41-000, MINF = 0.895, Camber = 0/2, ALPT = 6.00, BETA = 0.34, QINF = 291.2, RNPU = 2.2E+06, CNWP = 0.3247

η = 0.93		0.76		0.59		0.40	
			Upper Surface				
x/c	CP	*x/c*	CP	*x/c*	CP	*x/c*	CP
0.020	-0.294	0.000	0.903	0.000	-5.595**	0.010	-0.741**
0.060	-0.396	0.020	-0.611**	0.020	-0.530**	0.020	-0.830**
0.110	-0.441	0.040	-0.484	0.060	-1.287**	0.060	-0.836
0.200	-0.506	0.060	-0.578	0.090	-0.645	0.110	-0.765
0.230	-0.422	0.090	-0.572	0.110	-0.753	0.140	1.919**
0.400	-0.504	0.130	-0.610	0.130	-0.651	0.190	-5.458**
0.490	-0.468	0.150	-0.592	0.150	-0.632	0.250	-0.817
0.590	-0.293	0.200	-0.519	0.210	-0.711	0.400	-0.612
0.630	-0.159	0.250	-0.654	0.250	-0.672	0.490	-0.560
0.700	-0.126	0.260	-0.580	0.340	-0.746	0.580	-0.479
0.750	-0.176	0.280	-0.666	0.370	-0.732	0.650	-0.498
0.810	-0.213	0.290	-0.696	0.400	-0.787	0.700	-0.499
0.840	-0.164	0.310	-0.640	0.410	-0.709	0.750	-0.560
0.900	-0.074	0.320	-0.605	0.430	-0.743	0.800	-0.736
0.960	0.000	0.340	-0.650	0.440	-0.730	0.830	-0.702
		0.350	-0.362**	0.460	-0.753	0.900	-0.062
		0.370	-0.644	0.490	-0.675	0.960	-0.007
		0.380	-0.660	0.500	-0.779		
		0.400	-0.569	0.520	-0.744		
		0.410	-0.688	0.540	-0.741		
		0.430	-0.678	0.550	-0.649		
		0.440	-0.609	0.580	-0.597		
		0.460	-0.761	0.600	-0.575		
		0.470	-0.679	0.610	-0.510		
		0.490	-0.646	0.650	-2.652**		
		0.500	-0.668	0.700	-0.581		
		0.520	-0.655	0.750	-0.622		
		0.530	-0.648	0.820	-0.194		
		0.550	-0.672	0.890	-0.012		
		0.560	-0.649	0.900	0.010		
		0.580	-0.635	0.960	0.043		
		0.590	-0.663				
		0.600	-0.713				
		0.640	-2.486**				
		0.700	-0.563				
		0.750	-0.063				
		0.820	-2.665**				
		0.870	-0.072				
		0.930	0.006				
		0.960	0.062				
			Lower Surface				
0.020	-0.276	0.020	-0.079	0.020	0.042	0.020	0.450
0.110	-0.407	0.060	0.001	0.060	0.142	0.060	3.493**
0.230	-0.072	0.090	-0.082	0.090	0.001	0.110	-0.047
0.400	-0.115	0.120	-0.173	0.120	-0.403	0.250	-0.218
0.490	-0.107	0.200	-0.110	0.200	-0.226	0.400	-0.241
0.630	3.537**	0.260	-0.320	0.250	-0.243	0.490	-0.385
0.750	0.044	0.400	-2.683**	0.400	-0.271	0.580	-0.503
0.850	0.145	0.490	-0.180	0.490	-0.021	0.650	-0.111
0.900	0.195	0.580	-0.101	0.580	-0.212	0.750	0.140
0.960	0.171	0.640	0.281	0.650	0.033	0.830	0.286
		0.750	0.182	0.750	-0.012	0.900	0.363
		0.870	0.241	0.890	********	0.960	0.272
		0.930	0.273	0.930	0.302		
		0.960	0.190	0.960	-2.681**		
CN =	0.244		0.435		0.456		0.462

Table G-2. Continued.

Flight 198, Wing sweep = 26°, Time = 13-56-52-000, MINF = 0.905, Camber = 0/2, ALPT = 7.02, BETA = -0.22, QINF = 298.2, RNPU = 2.3E+06, CNWP = 0.3702

η = 0.93		0.76		0.59		0.40	
			Upper Surface				
x/c	CP	*x/c*	CP	*x/c*	CP	*x/c*	CP
0.020	-0.470	0.000	0.889	0.000	-5.466**	0.010	-0.868**
0.060	-0.571	0.020	-0.748**	0.020	-0.628**	0.020	-0.828**
0.110	-0.494	0.040	-0.543	0.060	-1.364**	0.060	-0.918
0.200	-0.631	0.060	-0.659	0.090	-0.737	0.110	-0.814
0.230	-0.533	0.090	-0.641	0.110	-0.807	0.140	1.844**
0.400	-0.555	0.130	-0.672	0.130	-0.711	0.190	-5.333**
0.490	-0.530	0.150	-0.678	0.150	-0.694	0.250	-0.851
0.590	-0.517	0.200	-0.579	0.210	-0.759	0.400	-0.650
0.630	-0.470	0.250	-0.722	0.250	-0.747	0.490	-0.640
0.700	-0.450	0.260	-0.653	0.340	-0.808	0.580	-0.532
0.750	-0.104	0.280	-0.721	0.370	-0.794	0.650	-0.527
0.810	-0.142	0.290	-0.742	0.400	-0.852	0.700	-0.526
0.840	-0.102	0.310	-0.684	0.410	-0.765	0.750	-0.601
0.900	-0.065	0.320	-0.667	0.430	-0.820	0.800	-0.765
0.960	-0.003	0.340	-0.716	0.440	-0.782	0.830	-0.740
		0.350	-0.365**	0.460	-0.792	0.900	-0.161
		0.370	-0.701	0.490	-0.735	0.960	-0.128
		0.380	-0.715	0.500	-0.836		
		0.400	-0.643	0.520	-0.813		
		0.410	-0.741	0.540	-0.811		
		0.430	-0.727	0.550	-0.790		
		0.440	-0.654	0.580	-0.777		
		0.460	-0.784	0.600	-0.775		
		0.470	-0.752	0.610	-0.671		
		0.490	-0.721	0.650	-2.592**		
		0.500	-0.713	0.700	-0.681		
		0.520	-0.733	0.750	-0.744		
		0.530	-0.706	0.820	-0.277		
		0.550	-0.736	0.890	-0.099		
		0.560	-0.735	0.900	-0.088		
		0.580	-0.710	0.960	-0.057		
		0.590	-0.716				
		0.600	-0.792				
		0.640	-2.430**				
		0.700	-0.586				
		0.750	-0.195				
		0.820	-2.605**				
		0.870	-0.099				
		0.930	-0.067				
		0.960	-0.049				
			Lower Surface				
0.020	-0.203	0.020	-0.005	0.020	0.165	0.020	0.516
0.110	-0.354	0.060	0.065	0.060	0.188	0.060	3.408**
0.230	-0.244	0.090	-0.032	0.090	0.064	0.110	-0.002
0.400	-0.129	0.120	-0.112	0.120	-0.333	0.250	-0.164
0.490	-0.144	0.200	-0.071	0.200	-0.177	0.400	-0.202
0.630	3.451**	0.260	-0.279	0.250	-0.181	0.490	-0.356
0.750	0.010	0.400	-2.622**	0.400	-0.242	0.580	-0.478
0.850	0.120	0.490	-0.159	0.490	-0.038	0.650	-0.329
0.900	0.186	0.580	-0.123	0.580	-0.444	0.750	0.110
0.960	0.158	0.640	0.254	0.650	0.014	0.830	0.255
		0.750	0.152	0.750	-0.029	0.900	0.346
		0.870	0.255	0.890	********	0.960	0.257
		0.930	0.213	0.930	0.247		
		0.960	0.135	0.960	-2.621**		
CN =	0.298		0.510		0.526		0.510

Table G-2. Continued.

Flight 198, Wing sweep = 26°, Time = 13-57-6-000, MINF = 0.899, Camber = 0/2, ALPT = 8.02, BETA = 0.55, QINF = 295.7, RNPU = 2.2E+06, CNWP = 0.4302

η = 0.93		0.76		0.59		0.40	
			Upper Surface				
x/c	CP	*x/c*	CP	*x/c*	CP	*x/c*	CP
0.020	-0.635	0.000	0.865	0.000	-5.521**	0.010	-0.955**
0.060	-0.700	0.020	-0.956**	0.020	-0.745**	0.020	-0.978**
0.110	-0.641	0.040	-0.638	0.060	-1.440**	0.060	-1.027
0.200	-0.735	0.060	-0.767	0.090	-0.838	0.110	-0.935
0.230	-0.502	0.090	-0.777	0.110	-0.917	0.140	1.879**
0.400	-0.653	0.130	-0.790	0.130	-0.848	0.190	-5.387**
0.490	-0.602	0.150	-0.802	0.150	-0.837	0.250	-1.002
0.590	-0.587	0.200	-0.717	0.210	-0.874	0.400	-0.719
0.630	-0.537	0.250	-0.842	0.250	-0.843	0.490	-0.687
0.700	-0.485	0.260	-0.749	0.340	-0.917	0.580	-0.605
0.750	-0.110	0.280	-0.816	0.370	-0.898	0.650	-0.571
0.810	-0.167	0.290	-0.842	0.400	-0.904	0.700	-0.599
0.840	-0.119	0.310	-0.782	0.410	-0.868	0.750	-0.651
0.900	-0.109	0.320	-0.767	0.430	-0.929	0.800	-0.794
0.960	-0.041	0.340	-0.815	0.440	-0.887	0.830	-0.721
		0.350	-0.388**	0.460	-0.902	0.900	-0.193
		0.370	-0.788	0.490	-0.832	0.960	-0.168
		0.380	-0.810	0.500	-0.925		
		0.400	-0.730	0.520	-0.866		
		0.410	-0.846	0.540	-0.910		
		0.430	-0.835	0.550	-0.891		
		0.440	-0.759	0.580	-0.866		
		0.460	-0.906	0.600	-0.849		
		0.470	-0.871	0.610	-0.798		
		0.490	-0.815	0.650	-2.623**		
		0.500	-0.810	0.700	-0.894		
		0.520	-0.779	0.750	-0.752		
		0.530	-0.797	0.820	-0.264		
		0.550	-0.817	0.890	-0.163		
		0.560	-0.823	0.900	-0.172		
		0.580	-0.804	0.960	-0.152		
		0.590	-0.831				
		0.600	-0.882				
		0.640	-2.459**				
		0.700	-0.262				
		0.750	-0.209				
		0.820	-2.636**				
		0.870	-0.184				
		0.930	-0.188				
		0.960	-0.170				
			Lower Surface				
0.020	-0.005	0.020	0.160	0.020	0.252	0.020	0.618
0.110	-0.215	0.060	0.163	0.060	0.276	0.060	3.429**
0.230	-0.082	0.090	0.058	0.090	0.149	0.110	0.067
0.400	-0.131	0.120	-0.038	0.120	-0.276	0.250	-0.091
0.490	-0.161	0.200	-0.021	0.200	-0.048	0.400	-0.138
0.630	3.473**	0.260	-0.208	0.250	-0.102	0.490	-0.307
0.750	-0.022	0.400	-2.653**	0.400	-0.176	0.580	-0.404
0.850	0.085	0.490	-0.196	0.490	-0.032	0.650	-0.143
0.900	0.139	0.580	-0.147	0.580	-0.249	0.750	0.137
0.960	0.137	0.640	0.237	0.650	-0.016	0.830	0.281
		0.750	0.126	0.750	-0.019	0.900	0.353
		0.870	0.170	0.890	********	0.960	0.239
		0.930	0.158	0.930	0.225		
		0.960	0.072	0.960	-2.652**		
CN =	0.379		0.567		0.659		0.638

Table G-2. Continued.

Flight 198, Wing sweep = 26°, Time = 13-57-20-000, MINF = 0.901, Camber = 0/2, ALPT = 8.05, BETA = 0.26, QINF = 301.2, RNPU = 2.3E+06, CNWP = 0.4293

η = 0.93		0.76		0.59		0.40	
			Upper Surface				
x/c	CP	*x/c*	CP	*x/c*	CP	*x/c*	CP
0.020	-0.626	0.000	0.879	0.000	-5.445**	0.010	-0.953**
0.060	-0.682	0.020	-0.952**	0.020	-0.726**	0.020	-0.976**
0.110	-0.658	0.040	-0.628	0.060	-1.428**	0.060	-1.013
0.200	-0.729	0.060	-0.748	0.090	-0.839	0.110	-0.922
0.230	-0.581	0.090	-0.767	0.110	-0.919	0.140	1.850**
0.400	-0.651	0.130	-0.777	0.130	-0.840	0.190	-5.313**
0.490	-0.597	0.150	-0.795	0.150	-0.800	0.250	-0.979
0.590	-0.579	0.200	-0.710	0.210	-0.862	0.400	-0.714
0.630	-0.533	0.250	-0.822	0.250	-0.851	0.490	-0.679
0.700	-0.592	0.260	-0.744	0.340	-0.911	0.580	-0.610
0.750	-0.099	0.280	-0.828	0.370	-0.885	0.650	-0.571
0.810	-0.133	0.290	-0.831	0.400	-0.897	0.700	-0.583
0.840	-0.097	0.310	-0.772	0.410	-0.858	0.750	-0.649
0.900	-0.102	0.320	-0.761	0.430	-0.915	0.800	-0.796
0.960	-0.035	0.340	-0.824	0.440	-0.876	0.830	-0.768
		0.350	-0.381**	0.460	-0.898	0.900	-0.194
		0.370	-0.780	0.490	-0.819	0.960	-0.172
		0.380	-0.804	0.500	-0.912		
		0.400	-0.733	0.520	-0.897		
		0.410	-0.835	0.540	-0.917		
		0.430	-0.826	0.550	-0.882		
		0.440	-0.752	0.580	-0.863		
		0.460	-0.897	0.600	-0.853		
		0.470	-0.837	0.610	-0.785		
		0.490	-0.806	0.650	-2.599**		
		0.500	-0.806	0.700	-0.934		
		0.520	-0.798	0.750	-0.797		
		0.530	-0.784	0.820	-0.267		
		0.550	-0.806	0.890	-0.175		
		0.560	-0.816	0.900	-0.190		
		0.580	-0.790	0.960	-0.152		
		0.590	-0.802				
		0.600	-0.875				
		0.640	-2.439**				
		0.700	-0.263				
		0.750	-0.178				
		0.820	-2.612**				
		0.870	-0.204				
		0.930	-0.183				
		0.960	-0.161				
			Lower Surface				
0.020	-0.066	0.020	0.180	0.020	0.299	0.020	0.631
0.110	-0.212	0.060	0.169	0.060	0.290	0.060	3.342**
0.230	-0.091	0.090	0.062	0.090	0.156	0.110	0.091
0.400	-0.135	0.120	0.012	0.120	-0.249	0.250	-0.085
0.490	-0.160	0.200	-0.016	0.200	-0.055	0.400	-0.137
0.630	3.385**	0.260	-0.206	0.250	-0.102	0.490	-0.304
0.750	-0.027	0.400	-2.629**	0.400	-0.172	0.580	-0.406
0.850	0.081	0.490	-0.195	0.490	-0.056	0.650	-0.180
0.900	0.153	0.580	-0.147	0.580	-0.327	0.750	0.139
0.960	0.135	0.640	0.238	0.650	-0.007	0.830	0.267
		0.750	0.145	0.750	-0.018	0.900	0.360
		0.870	0.191	0.890	********	0.960	0.243
		0.930	0.164	0.930	0.226		
		0.960	0.064	0.960	-2.628**		
CN =	0.386		0.568		0.659		0.634

Table G-2. Continued.

Flight 198, Wing sweep = 26°, Time = 13-57-40-500, MINF = 0.901, Camber = 0/2, ALPT = 9.05, BETA = 0.42, QINF = 303.2, RNPU = 2.3E+06, CNWP = 0.4417

η = 0.93		0.76		0.59		0.40	
			Upper Surface				
x/c	CP	*x/c*	CP	*x/c*	CP	*x/c*	CP
0.020	-0.699	0.000	0.842	0.000	-5.422**	0.010	-1.050**
0.060	-0.786	0.020	-1.054**	0.020	-0.826**	0.020	-1.053**
0.110	-0.709	0.040	-0.738	0.060	-1.380**	0.060	-1.100
0.200	-0.801	0.060	-0.849	0.090	-0.926	0.110	-1.023
0.230	-0.632	0.090	-0.847	0.110	-0.995	0.140	1.832**
0.400	-0.691	0.130	-0.855	0.130	-0.917	0.190	-5.291**
0.490	-0.668	0.150	-0.859	0.150	-0.876	0.250	-1.049
0.590	-0.641	0.200	-0.775	0.210	-0.940	0.400	-0.784
0.630	-0.585	0.250	-0.905	0.250	-0.910	0.490	-0.711
0.700	-0.638	0.260	-0.806	0.340	-0.980	0.580	-0.657
0.750	-0.128	0.280	-0.883	0.370	-0.956	0.650	-0.605
0.810	-0.172	0.290	-0.895	0.400	-0.962	0.700	-0.641
0.840	-0.103	0.310	-0.838	0.410	-0.925	0.750	-0.687
0.900	-0.152	0.320	-0.828	0.430	-0.992	0.800	-0.818
0.960	-0.076	0.340	-0.886	0.440	-0.962	0.830	-0.707
		0.350	-0.388**	0.460	-0.964	0.900	-0.264
		0.370	-0.845	0.490	-0.878	0.960	-0.219
		0.380	-0.868	0.500	-0.982		
		0.400	-0.792	0.520	-0.959		
		0.410	-0.892	0.540	-0.965		
		0.430	-0.890	0.550	-0.949		
		0.440	-0.810	0.580	-0.960		
		0.460	-0.961	0.600	-0.931		
		0.470	-0.921	0.610	-0.869		
		0.490	-0.865	0.650	-2.596**		
		0.500	-0.874	0.700	-0.602		
		0.520	-0.867	0.750	-0.521		
		0.530	-0.853	0.820	-0.388		
		0.550	-0.878	0.890	-0.289		
		0.560	-0.766	0.900	-0.306		
		0.580	-0.660	0.960	-0.270		
		0.590	-0.429				
		0.600	-0.410				
		0.640	-2.436**				
		0.700	-0.286				
		0.750	-0.248				
		0.820	-2.608**				
		0.870	-0.259				
		0.930	-0.250				
		0.960	-0.228				
			Lower Surface				
0.020	-0.008	0.020	0.269	0.020	0.360	0.020	0.697
0.110	-0.150	0.060	0.231	0.060	0.348	0.060	3.306**
0.230	-0.063	0.090	0.127	0.090	0.216	0.110	0.172
0.400	-0.133	0.120	0.042	0.120	-0.204	0.250	-0.031
0.490	-0.176	0.200	0.028	0.200	0.006	0.400	-0.099
0.630	3.349**	0.260	-0.147	0.250	-0.042	0.490	-0.249
0.750	-0.060	0.400	-2.625**	0.400	-0.135	0.580	-0.378
0.850	0.036	0.490	-0.185	0.490	-0.026	0.650	-0.126
0.900	0.109	0.580	-0.152	0.580	-0.266	0.750	0.144
0.960	0.103	0.640	0.224	0.650	-0.017	0.830	0.289
		0.750	0.129	0.750	-0.017	0.900	0.359
		0.870	0.167	0.890	********	0.960	0.233
		0.930	0.120	0.930	0.210		
		0.960	0.028	0.960	-2.624**		
CN =	0.433		0.602		0.713		0.723

Table G-2. Continued.

Flight 198, Wing sweep = 26°, Time = 13-57-45-000, MINF = 0.898, Camber = 0/2, ALPT = 9.99, BETA = 0.36, QINF = 301.3, RNPU = 2.3E+06, CNWP = 0.4834

η = 0.93		0.76		0.59		0.40	
			Upper Surface				
x/c	CP	*x/c*	CP	*x/c*	CP	*x/c*	CP
0.020	-0.811	0.000	0.775	0.000	-5.456**	0.010	-1.077**
0.060	-0.881	0.020	-1.096**	0.020	-0.914**	0.020	-1.132**
0.110	-0.847	0.040	-0.837	0.060	-1.520**	0.060	-1.189
0.200	-0.882	0.060	-0.945	0.090	-0.993	0.110	-1.116
0.230	-0.653	0.090	-0.920	0.110	-1.072	0.140	1.821**
0.400	-0.754	0.130	-0.944	0.130	-0.994	0.190	-5.324**
0.490	-0.689	0.150	-0.939	0.150	-0.980	0.250	-1.111
0.590	-0.688	0.200	-0.850	0.210	-1.001	0.400	-0.836
0.630	-0.633	0.250	-0.988	0.250	-0.979	0.490	-0.762
0.700	-0.314	0.260	-0.877	0.340	-1.047	0.580	-0.702
0.750	-0.204	0.280	-0.941	0.370	-1.031	0.650	-0.644
0.810	-0.247	0.290	-0.963	0.400	-1.025	0.700	-0.707
0.840	-0.192	0.310	-0.905	0.410	-1.000	0.750	-0.726
0.900	-0.205	0.320	-0.892	0.430	-1.073	0.800	-0.843
0.960	-0.140	0.340	-0.946	0.440	-1.029	0.830	-0.599
		0.350	-0.415**	0.460	-1.038	0.900	-0.292
		0.370	-0.918	0.490	-0.956	0.960	-0.228
		0.380	-0.939	0.500	-1.044		
		0.400	-0.860	0.520	-1.015		
		0.410	-0.967	0.540	-1.025		
		0.430	-0.954	0.550	-1.003		
		0.440	-0.870	0.580	-0.982		
		0.460	-0.954	0.600	-0.996		
		0.470	-0.731	0.610	-0.817		
		0.490	-0.612	0.650	-2.611**		
		0.500	-0.473	0.700	-0.476		
		0.520	-0.469	0.750	-0.552		
		0.530	-0.409	0.820	-0.468		
		0.550	-0.404	0.890	-0.373		
		0.560	-0.392	0.900	-0.384		
		0.580	-0.381	0.960	-0.369		
		0.590	-0.401				
		0.600	-0.397				
		0.640	-2.450**				
		0.700	-0.341				
		0.750	-0.302				
		0.820	-2.623**				
		0.870	-0.309				
		0.930	-0.308				
		0.960	-0.291				
			Lower Surface				
0.020	0.109	0.020	0.349	0.020	0.426	0.020	0.766
0.110	-0.096	0.060	0.289	0.060	0.397	0.060	3.329**
0.230	-0.043	0.090	0.182	0.090	0.267	0.110	0.194
0.400	-0.118	0.120	0.088	0.120	-0.152	0.250	0.010
0.490	-0.158	0.200	0.073	0.200	0.055	0.400	-0.062
0.630	3.372**	0.260	-0.096	0.250	-0.004	0.490	-0.205
0.750	-0.070	0.400	-2.641**	0.400	-0.095	0.580	-0.338
0.850	0.000	0.490	-0.170	0.490	-0.024	0.650	-0.111
0.900	0.074	0.580	-0.145	0.580	-0.248	0.750	0.146
0.960	0.060	0.640	0.227	0.650	-0.015	0.830	0.292
		0.750	0.106	0.750	-0.012	0.900	0.359
		0.870	0.133	0.890	********	0.960	0.236
		0.930	0.101	0.930	0.190		
		0.960	0.001	0.960	-2.639**		
CN =	0.477		0.623		0.774		0.788

Table G-2. Continued.

Flight 226, Wing sweep = 26°, Time = 10-9-29-000, MINF = 0.900, Camber = 0/2, ALPT = 6.02, BETA = -0.04, QINF = 292.3, RNPU = 2.2E+06, CNWP = 0.3283

η = 0.93		0.76		0.59		0.40	
			Upper Surface				
x/c	CP	*x/c*	CP	*x/c*	CP	*x/c*	CP
0.020	-0.466	0.000	0.861	0.000	3.648**	0.010	-0.694
0.060	-0.421	0.020	-0.636	0.020	-0.646	0.020	-0.780
0.110	-0.522	0.040	-0.551	0.060	-4.781**	0.060	-0.775
0.200	-0.444	0.060	-0.682	0.090	-0.677	0.110	-0.738
0.230	-0.228	0.090	-0.602	0.110	-0.718	0.140	-0.772
0.400	-0.520	0.130	-0.619	0.130	-0.602	0.190	-1.762**
0.490	-0.470	0.150	-0.657	0.150	-0.706	0.250	-0.790
0.590	-0.487	0.200	-0.531	0.210	-0.629	0.400	-0.645
0.630	-0.254	0.250	-0.627	0.250	-0.655	0.490	-0.569
0.700	-0.091	0.260	-0.609	0.340	-0.682	0.580	-0.486
0.750	-0.190	0.280	-0.624	0.370	-0.696	0.650	-0.461
0.810	-0.200	0.290	-0.633	0.400	-0.665	0.700	-0.462
0.840	-0.136	0.310	-0.676	0.410	-2.784**	0.750	-0.559
0.900	-0.096	0.320	-0.649	0.430	-0.691	0.800	-0.698
0.960	-0.011	0.340	-0.611	0.440	-0.653	0.830	-0.631
		0.350	-0.433**	0.460	-0.702	0.900	-0.109
		0.370	-0.634	0.490	-0.662	0.960	-0.087
		0.380	-0.671	0.500	-0.750		
		0.400	-0.516	0.520	-0.664		
		0.410	-0.664	0.540	-0.684		
		0.430	-0.620	0.550	-0.669		
		0.440	-0.602	0.580	-0.586		
		0.460	-0.709	0.600	-0.513		
		0.470	-0.647	0.610	-0.509		
		0.490	-0.691	0.650	2.242**		
		0.500	-0.708	0.700	-0.654		
		0.520	-0.698	0.750	-0.700		
		0.530	-0.685	0.820	-0.276		
		0.550	-0.729	0.890	-0.062		
		0.560	-0.632	0.900	-0.032		
		0.580	-0.689	0.960	0.030		
		0.590	-0.725				
		0.600	-0.755				
		0.640	-0.734				
		0.700	-0.683				
		0.750	-0.039**				
		0.820	-0.071				
		0.870	-0.067				
		0.930	-0.025				
		0.960	0.034				
			Lower Surface				
0.020	-0.305	0.020	-0.174	0.020	0.106	0.020	0.485
0.110	-0.403	0.060	-0.002	0.060	0.125	0.060	1.946**
0.230	-0.267	0.090	-0.110	0.090	1.228**	0.110	-0.007
0.400	-0.117	0.120	-0.168	0.120	-0.362	0.250	-0.213
0.490	-0.036	0.200	-0.194	0.200	-0.232	0.400	-0.244
0.630	2.007**	0.260	-0.329	0.250	-0.236	0.490	-0.392
0.750	-0.010	0.400	-0.338	0.400	-0.266	0.580	-0.455
0.850	0.141	0.490	-0.203	0.490	-0.062	0.650	-0.204
0.900	0.209	0.580	-0.182	0.580	-0.231	0.750	0.053
0.960	0.177	0.640	0.036	0.650	-0.059	0.830	0.267
		0.750	0.215	0.750	0.299	0.900	0.323
		0.870	0.271	0.890	0.237	0.960	0.246
		0.930	0.212	0.930	0.208		
		0.960	0.180	0.960	-2.873**		
CN =	0.225		0.438		0.468		0.474

Table G-2. Continued.

Flight 226, Wing sweep = 26°, Time = 10-9-35-000, MINF = 0.898, Camber = 0/2, ALPT = 6.02, BETA = -0.41, QINF = 290.1, RNPU = 2.2E+06, CNWP = 0.3213

η = 0.93		0.76		0.59		0.40	
			Upper Surface				
x/c	CP	*x/c*	CP	*x/c*	CP	*x/c*	CP
0.020	-0.459	0.000	0.855	0.000	3.680**	0.010	-0.695
0.060	-0.478	0.020	-0.637	0.020	-0.647	0.020	-0.782
0.110	-0.569	0.040	-0.555	0.060	-4.813**	0.060	-0.776
0.200	-0.444	0.060	-0.652	0.090	-0.678	0.110	-0.739
0.230	-0.474	0.090	-0.611	0.110	-0.719	0.140	-0.829
0.400	-0.528	0.130	-0.619	0.130	-0.587	0.190	-1.771**
0.490	-0.462	0.150	-0.654	0.150	-0.707	0.250	-0.792
0.590	-0.463	0.200	-0.552	0.210	-0.620	0.400	-0.645
0.630	-0.180	0.250	-0.628	0.250	-0.648	0.490	-0.540
0.700	-0.095	0.260	-0.610	0.340	-0.683	0.580	-0.486
0.750	-0.216	0.280	-0.640	0.370	-0.672	0.650	-0.461
0.810	-0.212	0.290	-0.633	0.400	-0.742	0.700	-0.456
0.840	-0.156	0.310	-0.677	0.410	-2.801**	0.750	-0.559
0.900	-0.100	0.320	-0.650	0.430	-0.692	0.800	-0.699
0.960	0.001	0.340	-0.627	0.440	-0.654	0.830	-0.647
		0.350	-0.432**	0.460	-0.697	0.900	-0.101
		0.370	-0.627	0.490	-0.561	0.960	-0.052
		0.380	-0.672	0.500	-0.742		
		0.400	-0.640	0.520	-0.648		
		0.410	-0.661	0.540	-0.657		
		0.430	-0.620	0.550	-0.619		
		0.440	-0.609	0.580	-0.586		
		0.460	-0.695	0.600	-0.528		
		0.470	-0.641	0.610	-0.531		
		0.490	-0.692	0.650	2.263**		
		0.500	-0.704	0.700	-0.617		
		0.520	-0.699	0.750	-0.689		
		0.530	-0.667	0.820	-0.257		
		0.550	-0.731	0.890	-0.054		
		0.560	-0.626	0.900	-0.013		
		0.580	-0.683	0.960	0.038		
		0.590	-0.731				
		0.600	-0.741				
		0.640	-0.728				
		0.700	-0.681				
		0.750	-0.020**				
		0.820	-0.071				
		0.870	-0.086				
		0.930	-0.017				
		0.960	0.042				
			Lower Surface				
0.020	-0.303	0.020	-0.171	0.020	0.111	0.020	0.479
0.110	-0.387	0.060	-0.025	0.060	0.137	0.060	1.964**
0.230	-0.175	0.090	-0.112	0.090	1.241**	0.110	0.008
0.400	-0.094	0.120	-0.158	0.120	-0.374	0.250	-0.230
0.490	-0.070	0.200	-0.195	0.200	-0.237	0.400	-0.241
0.630	2.026**	0.260	-0.343	0.250	-0.249	0.490	-0.391
0.750	0.018	0.400	-0.297	0.400	-0.264	0.580	-0.470
0.850	0.154	0.490	-0.193	0.490	-0.055	0.650	-0.163
0.900	0.217	0.580	-0.155	0.580	-0.168	0.750	0.067
0.960	0.182	0.640	0.048	0.650	-0.055	0.830	0.282
		0.750	0.221	0.750	0.267	0.900	0.324
		0.870	0.278	0.890	0.235	0.960	0.252
		0.930	0.203	0.930	0.221		
		0.960	0.185	0.960	-2.891**		
CN =	0.272		0.448		0.461		0.479

Table G-2. Continued.

Flight 226, Wing sweep = 26°, Time = 10-9-58-500, MINF = 0.896, Camber = 0/2, ALPT = 11.93, BETA = -0.70, QINF = 290.6, RNPU = 2.2E+06, CNWP = 0.3468

η = 0.93		0.76		0.59		0.40	
			Upper Surface				
x/c	CP	*x/c*	CP	*x/c*	CP	*x/c*	CP
0.020	-1.094	0.000	0.535	0.000	3.662**	0.010	-1.250
0.060	-1.093	0.020	-1.492	0.020	-1.152	0.020	-1.250
0.110	-1.277	0.040	-1.113	0.060	-4.816**	0.060	-1.304
0.200	-0.894	0.060	-1.158	0.090	-1.157	0.110	-1.240
0.230	-1.022	0.090	-1.122	0.110	-1.168	0.140	-1.265
0.400	-0.895	0.130	-1.119	0.130	-1.033	0.190	-1.780**
0.490	-0.605	0.150	-1.137	0.150	-1.188	0.250	-1.209
0.590	-0.490	0.200	-1.047	0.210	-1.037	0.400	-0.870
0.630	-0.438	0.250	-0.819	0.250	-1.099	0.490	-0.739
0.700	-0.361	0.260	-0.668	0.340	-0.771	0.580	-0.697
0.750	-0.392	0.280	-0.664	0.370	-0.683	0.650	-0.629
0.810	-0.400	0.290	-0.628	0.400	-0.744	0.700	-0.605
0.840	-0.360	0.310	-0.665	0.410	-2.808**	0.750	-0.607
0.900	-0.326	0.320	-0.640	0.430	-0.655	0.800	-0.601
0.960	-0.259	0.340	-0.578	0.440	-0.601	0.830	-0.538
		0.350	-0.372**	0.460	-0.624	0.900	-0.450
		0.370	-0.566	0.490	-0.533	0.960	-0.382
		0.380	-0.600	0.500	-0.630		
		0.400	-0.522	0.520	-0.573		
		0.410	-0.576	0.540	-0.568		
		0.430	-0.532	0.550	-0.601		
		0.440	-0.524	0.580	-0.636		
		0.460	-0.585	0.600	-0.533		
		0.470	-0.509	0.610	-0.525		
		0.490	-0.548	0.650	2.248**		
		0.500	-0.575	0.700	-0.627		
		0.520	-0.526	0.750	-0.684		
		0.530	-0.530	0.820	-0.491		
		0.550	-0.613	0.890	-0.476		
		0.560	-0.461	0.900	-0.512		
		0.580	-0.513	0.960	-0.400		
		0.590	-0.561				
		0.600	-0.553				
		0.640	-0.433				
		0.700	-0.419				
		0.750	-0.057**				
		0.820	-0.385				
		0.870	-0.474				
		0.930	-0.405				
		0.960	-0.388				
			Lower Surface				
0.020	0.176	0.020	0.494	0.020	0.613	0.020	0.816
0.110	-0.006	0.060	0.367	0.060	0.481	0.060	1.950**
0.230	-0.026	0.090	0.216	0.090	1.228**	0.110	0.283
0.400	-0.094	0.120	0.185	0.120	-0.043	0.250	0.088
0.490	-0.120	0.200	0.106	0.200	0.080	0.400	0.007
0.630	2.012**	0.260	-0.032	0.250	0.087	0.490	-0.140
0.750	-0.129	0.400	-0.067	0.400	-0.060	0.580	-0.254
0.850	-0.072	0.490	-0.149	0.490	-0.074	0.650	-0.097
0.900	-0.005	0.580	-0.187	0.580	-0.186	0.750	0.075
0.960	-0.037	0.640	-0.006	0.650	-0.096	0.830	0.279
		0.750	0.148	0.750	0.294	0.900	0.302
		0.870	0.123	0.890	0.165	0.960	0.161
		0.930	0.045	0.930	0.110		
		0.960	-0.015	0.960	-2.897**		
CN =	0.590		0.673		0.764		0.892

Table G-2. Continued.

Flight 211, Wing sweep = 26°, Time = 11-33-56-000, MINF = 0.896, Camber = 0/2, ALPT = 5.02, BETA = 0.02, QINF = 298.7, RNPU = 2.3E+06, CNWP = 0.3176

η = 0.93		0.76		0.59		0.40	
			Upper Surface				
x/c	CP	*x/c*	CP	*x/c*	CP	*x/c*	CP
0.020	-0.163	0.000	0.871	0.000	0.494**	0.010	-0.714
0.060	-0.386	0.020	-0.521	0.020	-0.346	0.020	-0.793
0.110	-0.449	0.040	-0.362	0.060	1.251**	0.060	-0.709
0.200	-0.466	0.060	-0.522	0.090	-0.625	0.110	-0.735
0.230	-0.417	0.090	-0.554	0.110	-0.668	0.140	-0.767
0.400	-0.502	0.130	-0.546	0.130	-1.778**	0.190	-1.778**
0.490	-0.417	0.150	-0.559	0.150	-0.617	0.250	-0.809
0.590	-0.180	0.200	-0.445	0.210	-0.643	0.400	-0.645
0.630	-0.211	0.250	-0.635	0.250	-0.649	0.490	-0.494
0.700	-0.147	0.260	-0.583	0.340	-0.721	0.580	-0.454
0.750	-0.223	0.280	-0.630	0.370	-0.729	0.650	-0.501
0.810	-0.226	0.290	-0.621	0.400	-0.711	0.700	-0.461
0.840	-0.194	0.310	-0.603	0.410	0.653**	0.750	-0.533
0.900	-0.100	0.320	-0.621	0.430	-0.714	0.800	-0.711
0.960	-0.004	0.340	-0.627	0.440	-0.710	0.830	-0.671
		0.350	-0.369**	0.460	-0.714	0.900	-0.083
		0.370	-0.633	0.490	-0.641	0.960	0.009
		0.380	-0.673	0.500	-0.713		
		0.400	-0.586	0.520	-0.627		
		0.410	-0.649	0.540	-0.601		
		0.430	-0.600	0.550	-0.601		
		0.440	-0.576	0.580	-0.585		
		0.460	-0.649	0.600	-0.556		
		0.470	-0.646	0.610	-0.539		
		0.490	-0.634	0.650	-0.712		
		0.500	-0.663	0.700	-0.556		
		0.520	-0.637	0.750	-0.612		
		0.530	-0.624	0.820	-0.225		
		0.550	-0.661	0.890	-0.041		
		0.560	-0.661	0.900	0.001		
		0.580	-0.635	0.960	0.103		
		0.590	-0.681				
		0.600	-0.688				
		0.640	-0.678				
		0.700	-0.272				
		0.750	-0.031**				
		0.820	-0.138				
		0.870	-0.140				
		0.930	-0.032				
		0.960	0.029				
			Lower Surface				
0.020	-0.340	0.020	-0.200	0.020	-0.030	0.020	0.360
0.110	-0.439	0.060	-0.025	0.060	0.037	0.060	-0.052
0.230	-0.311	0.090	-0.165	0.090	-0.067	0.110	-0.025
0.400	-0.119	0.120	-0.246	0.120	-0.324	0.250	-0.278
0.490	-0.073	0.200	-0.201	0.200	-0.269	0.400	-0.319
0.630	4.043**	0.260	-0.359	0.250	-0.319	0.490	-0.422
0.750	0.027	0.400	-0.377	0.400	-0.328	0.580	-0.519
0.850	0.091	0.490	-0.169	0.490	-0.087	0.650	-0.193
0.900	0.185	0.580	-0.190	0.580	-0.201	0.750	0.077
0.960	0.167	0.640	0.038	0.650	-0.051	0.830	0.211
		0.750	0.184	0.750	-0.073	0.900	0.284
		0.870	0.239	0.890	0.282	0.960	0.253
		0.930	0.255	0.930	0.269		
		0.960	0.197	0.960	0.392		
CN =	0.201		0.358		0.398		0.428

Table G-2. Continued.

Flight 211, Wing sweep = 26°, Time = 11-34-26-500, MINF = 0.896, Camber = 0/2, ALPT = 7.96, BETA = 0.45, QINF = 301.0, RNPU = 2.3E+06, CNWP = 0.4324

η = 0.93		0.76		0.59		0.40	
			Upper Surface				
x/c	CP	*x/c*	CP	*x/c*	CP	*x/c*	CP
0.020	-0.678	0.000	0.816	0.000	0.286**	0.010	-1.017
0.060	-0.740	0.020	-0.896	0.020	-0.820	0.020	-1.023
0.110	-0.769	0.040	-0.643	0.060	0.899**	0.060	-1.012
0.200	-0.740	0.060	-0.827	0.090	-0.901	0.110	-0.990
0.230	-0.637	0.090	-0.835	0.110	-0.949	0.140	-1.017
0.400	-0.687	0.130	-0.817	0.130	-1.781**	0.190	-1.781**
0.490	-0.631	0.150	-0.846	0.150	-0.880	0.250	-1.044
0.590	-0.618	0.200	-0.726	0.210	-0.871	0.400	-0.803
0.630	-0.574	0.250	-0.859	0.250	-0.891	0.490	-0.704
0.700	-0.535	0.260	-0.812	0.340	-0.957	0.580	-0.649
0.750	-0.149	0.280	-0.859	0.370	-0.951	0.650	-0.640
0.810	-0.169	0.290	-0.853	0.400	-0.943	0.700	-0.614
0.840	-0.164	0.310	-0.841	0.410	0.631**	0.750	-0.683
0.900	-0.170	0.320	-0.843	0.430	-0.950	0.800	-0.792
0.960	-0.062	0.340	-0.839	0.440	-0.942	0.830	-0.613
		0.350	-0.405**	0.460	-0.931	0.900	-0.219
		0.370	-0.826	0.490	-0.886	0.960	-0.185
		0.380	-0.912	0.500	-0.968		
		0.400	-0.791	0.520	-0.941		
		0.410	-0.892	0.540	-0.959		
		0.430	-0.851	0.550	-0.928		
		0.440	-0.805	0.580	-0.928		
		0.460	-0.909	0.600	-0.916		
		0.470	-0.863	0.610	-0.887		
		0.490	-0.877	0.650	-1.115		
		0.500	-0.855	0.700	-0.967		
		0.520	-0.858	0.750	-0.649		
		0.530	-0.839	0.820	-0.324		
		0.550	-0.884	0.890	-0.195		
		0.560	-0.882	0.900	-0.207		
		0.580	-0.865	0.960	-0.137		
		0.590	-0.913				
		0.600	-0.861				
		0.640	-0.301				
		0.700	-0.298				
		0.750	-0.062**				
		0.820	-0.248				
		0.870	-0.239				
		0.930	-0.236				
		0.960	-0.217				
			Lower Surface				
0.020	-0.060	0.020	0.173	0.020	0.278	0.020	0.593
0.110	-0.213	0.060	0.179	0.060	0.236	0.060	-0.068
0.230	-0.107	0.090	0.043	0.090	0.120	0.110	0.205
0.400	-0.190	0.120	-0.035	0.120	-0.138	0.250	-0.122
0.490	-0.156	0.200	-0.082	0.200	-0.046	0.400	-0.185
0.630	3.995**	0.260	-0.214	0.250	-0.138	0.490	-0.309
0.750	-0.055	0.400	-0.222	0.400	-0.209	0.580	-0.407
0.850	0.016	0.490	-0.222	0.490	-0.096	0.650	-0.171
0.900	0.131	0.580	-0.221	0.580	-0.277	0.750	0.098
0.960	0.123	0.640	-0.024	0.650	-0.081	0.830	0.241
		0.750	0.121	0.750	-0.074	0.900	0.307
		0.870	0.171	0.890	0.249	0.960	0.199
		0.930	0.142	0.930	0.206		
		0.960	0.073	0.960	0.288		
CN =	0.410		0.564		0.684		0.686

Table G-2. Continued.

Flight 211, Wing sweep = 26°, Time = 11-34-41-500, MINF = 0.923, Camber = 0/2, ALPT = 9.09, BETA = -0.33, QINF = 339.7, RNPU = 2.5E+06, CNWP = 0.4651

η = 0.93		0.76		0.59		0.40	
			Upper Surface				
x/c	CP	x/c	CP	x/c	CP	x/c	CP
0.020	-0.668	0.000	0.785	0.000	0.215**	0.010	-0.970
0.060	-0.718	0.020	-0.889	0.020	-0.801	0.020	-0.988
0.110	-0.744	0.040	-0.675	0.060	0.751**	0.060	-1.058
0.200	-0.779	0.060	-0.820	0.090	-0.900	0.110	-1.005
0.230	-0.678	0.090	-0.825	0.110	-0.937	0.140	-1.051
0.400	-0.687	0.130	-0.827	0.130	-1.676**	0.190	-1.676**
0.490	-0.659	0.150	-0.828	0.150	-0.871	0.250	-1.032
0.590	-0.674	0.200	-0.733	0.210	-0.861	0.400	-0.799
0.630	-0.619	0.250	-0.849	0.250	-0.886	0.490	-0.672
0.700	-0.672	0.260	-0.805	0.340	-0.946	0.580	-0.616
0.750	-0.658	0.280	-0.847	0.370	-0.951	0.650	-0.635
0.810	-0.744	0.290	-0.854	0.400	-0.913	0.700	-0.625
0.840	-0.756	0.310	-0.826	0.410	0.461**	0.750	-0.663
0.900	-0.223	0.320	-0.830	0.430	-0.953	0.800	-0.789
0.960	-0.175	0.340	-0.849	0.440	-0.931	0.830	-0.752
		0.350	-0.418**	0.460	-0.938	0.900	-0.500
		0.370	-0.835	0.490	-0.877	0.960	-0.403
		0.380	-0.897	0.500	-0.961		
		0.400	-0.775	0.520	-0.947		
		0.410	-0.879	0.540	-0.942		
		0.430	-0.850	0.550	-0.930		
		0.440	-0.806	0.580	-0.916		
		0.460	-0.900	0.600	-0.918		
		0.470	-0.901	0.610	-0.901		
		0.490	-0.861	0.650	-1.087		
		0.500	-0.876	0.700	-0.934		
		0.520	-0.867	0.750	-1.008		
		0.530	-0.851	0.820	-0.453		
		0.550	-0.893	0.890	-0.367		
		0.560	-0.879	0.900	-0.383		
		0.580	-0.852	0.960	-0.310		
		0.590	-0.904				
		0.600	-0.907				
		0.640	-0.518				
		0.700	-0.406				
		0.750	-0.096**				
		0.820	-0.341				
		0.870	-0.327				
		0.930	-0.319				
		0.960	-0.312				
			Lower Surface				
0.020	-0.005	0.020	0.282	0.020	0.353	0.020	0.683
0.110	-0.199	0.060	0.236	0.060	0.282	0.060	-0.092
0.230	-0.230	0.090	0.088	0.090	0.185	0.110	0.248
0.400	-0.237	0.120	-0.012	0.120	-0.077	0.250	-0.068
0.490	-0.268	0.200	-0.037	0.200	-0.015	0.400	-0.148
0.630	3.442**	0.260	-0.184	0.250	-0.103	0.490	-0.266
0.750	-0.125	0.400	-0.232	0.400	-0.165	0.580	-0.384
0.850	-0.099	0.490	-0.353	0.490	-0.130	0.650	-0.624
0.900	0.007	0.580	-0.427	0.580	-0.400	0.750	0.038
0.960	-0.017	0.640	-0.013	0.650	-0.117	0.830	0.204
		0.750	0.101	0.750	-0.137	0.900	0.274
		0.870	0.136	0.890	0.230	0.960	0.165
		0.930	0.091	0.930	0.164		
		0.960	0.020	0.960	0.228		
CN =	0.442		0.580		0.723		0.688

Table G-2. Continued.

Flight 211, Wing sweep = 26°, Time = 11-34-52-500, MINF = 0.900, Camber = 0/2, ALPT = 9.87, BETA = -0.07, QINF = 335.9, RNPU = 2.6E+06, CNWP = 0.4729

η = 0.93		0.76		0.59		0.40	
			Upper Surface				
x/c	CP	x/c	CP	x/c	CP	x/c	CP
0.020	-0.831	0.000	0.711	0.000	0.254**	0.010	-1.112
0.060	-0.899	0.020	-1.049	0.020	-0.973	0.020	-1.149
0.110	-0.911	0.040	-0.827	0.060	0.726**	0.060	-1.183
0.200	-0.893	0.060	-0.972	0.090	-1.031	0.110	-1.128
0.230	-0.764	0.090	-0.952	0.110	-1.076	0.140	-1.122
0.400	-0.786	0.130	-0.957	0.130	-1.765**	0.190	-1.765**
0.490	-0.724	0.150	-0.963	0.150	-1.002	0.250	-1.134
0.590	-0.761	0.200	-0.872	0.210	-0.992	0.400	-0.876
0.630	-0.682	0.250	-0.981	0.250	-1.001	0.490	-0.744
0.700	-0.482	0.260	-0.923	0.340	-1.068	0.580	-0.689
0.750	-0.212	0.280	-0.975	0.370	-1.051	0.650	-0.728
0.810	-0.195	0.290	-0.968	0.400	-0.985	0.700	-0.707
0.840	-0.197	0.310	-0.935	0.410	0.397**	0.750	-0.738
0.900	-0.229	0.320	-0.949	0.430	-1.075	0.800	-0.861
0.960	-0.166	0.340	-0.962	0.440	-1.052	0.830	-0.740
		0.350	-0.433**	0.460	-1.061	0.900	-0.337
		0.370	-0.942	0.490	-0.992	0.960	-0.255
		0.380	-1.021	0.500	-1.061		
		0.400	-0.904	0.520	-1.049		
		0.410	-0.994	0.540	-1.063		
		0.430	-0.967	0.550	-1.035		
		0.440	-0.898	0.580	-1.031		
		0.460	-0.991	0.600	-1.021		
		0.470	-0.811	0.610	-0.839		
		0.490	-0.694	0.650	-0.685		
		0.500	-0.665	0.700	-0.531		
		0.520	-0.543	0.750	-0.581		
		0.530	-0.477	0.820	-0.489		
		0.550	-0.485	0.890	-0.424		
		0.560	-0.466	0.900	-0.426		
		0.580	-0.444	0.960	-0.346		
		0.590	-0.465				
		0.600	-0.451				
		0.640	-0.375				
		0.700	-0.381				
		0.750	-0.064**				
		0.820	-0.345				
		0.870	-0.321				
		0.930	-0.326				
		0.960	-0.312				
			Lower Surface				
0.020	0.095	0.020	0.422	0.020	0.435	0.020	0.733
0.110	-0.123	0.060	0.312	0.060	0.351	0.060	-0.070
0.230	-0.078	0.090	0.149	0.090	0.238	0.110	0.287
0.400	-0.150	0.120	0.057	0.120	-0.026	0.250	-0.023
0.490	-0.162	0.200	0.015	0.200	0.033	0.400	-0.100
0.630	3.411**	0.260	-0.104	0.250	-0.035	0.490	-0.213
0.750	-0.131	0.400	-0.151	0.400	-0.121	0.580	-0.348
0.850	-0.074	0.490	-0.195	0.490	-0.095	0.650	-0.142
0.900	0.039	0.580	-0.242	0.580	-0.277	0.750	0.109
0.960	0.027	0.640	-0.034	0.650	-0.082	0.830	0.254
		0.750	0.102	0.750	-0.102	0.900	0.300
		0.870	0.124	0.890	0.228	0.960	0.193
		0.930	0.079	0.930	0.153		
		0.960	0.004	0.960	0.178		
CN =	0.491		0.634		0.774		0.820

Table G-2. Continued.

Flight 198, Wing sweep = 26°, Time = 14-1-12-000, MINF = 0.901, Camber = 5/2, ALPT = 8.27, BETA = 0.52, QINF = 296.5, RNPU = 2.2E+06, CNWP = 0.4358

η = 0.93		0.76		0.59		0.40	
			Upper Surface				
x/c	CP	*x/c*	CP	*x/c*	CP	*x/c*	CP
0.020	0.101	0.000	0.873	0.000	-5.504**	0.010	-0.657**
0.060	-0.214	0.020	-0.224**	0.020	-0.125**	0.020	-0.574**
0.110	-0.357	0.040	-0.090	0.060	-1.102**	0.060	-0.707
0.200	-0.833	0.060	-0.374	0.090	-0.542	0.110	-0.864
0.230	-0.691	0.090	-0.441	0.110	-0.687	0.140	1.880**
0.400	-0.710	0.130	-0.566	0.130	-0.743	0.190	-5.370**
0.490	-0.649	0.150	-0.718	0.150	-0.825	0.250	-1.032
0.590	-0.621	0.200	-0.720	0.210	-0.892	0.400	-0.734
0.630	-0.567	0.250	-0.875	0.250	-0.867	0.490	-0.706
0.700	-0.626	0.260	-0.764	0.340	-0.928	0.580	-0.618
0.750	-0.119	0.280	-0.864	0.370	-0.910	0.650	-0.567
0.810	-0.149	0.290	-0.877	0.400	-0.928	0.700	-0.590
0.840	-0.093	0.310	-0.810	0.410	-0.887	0.750	-0.654
0.900	-0.121	0.320	-0.795	0.430	-0.956	0.800	-0.810
0.960	-0.044	0.340	-0.838	0.440	-0.919	0.830	-0.786
		0.350	-0.343**	0.460	-0.934	0.900	-0.231
		0.370	-0.809	0.490	-0.857	0.960	-0.179
		0.380	-0.835	0.500	-0.963		
		0.400	-0.743	0.520	-0.899		
		0.410	-0.865	0.540	-0.946		
		0.430	-0.851	0.550	-0.921		
		0.440	-0.775	0.580	-0.899		
		0.460	-0.935	0.600	-0.916		
		0.470	-0.851	0.610	-0.849		
		0.490	-0.834	0.650	-2.613**		
		0.500	-0.834	0.700	-0.958		
		0.520	-0.837	0.750	-0.677		
		0.530	-0.815	0.820	-0.377		
		0.550	-0.851	0.890	-0.247		
		0.560	-0.841	0.900	-0.265		
		0.580	-0.810	0.960	-0.220		
		0.590	-0.734				
		0.600	-0.664				
		0.640	-2.450**				
		0.700	-0.281				
		0.750	-0.223				
		0.820	-2.626**				
		0.870	-0.242				
		0.930	-0.221				
		0.960	-0.211				
			Lower Surface				
0.020	-0.618	0.020	-0.218	0.020	-0.047	0.020	0.337
0.110	-0.196	0.060	0.071	0.060	0.186	0.060	3.423**
0.230	0.043	0.090	-0.011	0.090	0.094	0.110	0.043
0.400	-0.117	0.120	-0.028	0.120	-0.293	0.250	-0.046
0.490	-0.165	0.200	0.062	0.200	-0.037	0.400	-0.123
0.630	3.467**	0.260	-0.120	0.250	-0.046	0.490	-0.288
0.750	-0.038	0.400	-2.643**	0.400	-0.157	0.580	-0.395
0.850	0.064	0.490	-0.181	0.490	-0.022	0.650	-0.140
0.900	0.135	0.580	-0.144	0.580	-0.253	0.750	0.135
0.960	0.121	0.640	0.238	0.650	-0.012	0.830	0.281
		0.750	0.118	0.750	-0.005	0.900	0.360
		0.870	0.169	0.890	********	0.960	0.244
		0.930	0.135	0.930	0.219		
		0.960	0.034	0.960	-2.642**		
CN =	0.394		0.529		0.667		0.651

Table G-2. Continued.

Flight 198, Wing sweep = 26°, Time = 14-1-22-500, MINF = 0.905, Camber = 5/2, ALPT = 8.99, BETA = 0.55, QINF = 298.5, RNPU = 2.3E+06, CNWP = 0.4474

η = 0.93		0.76		0.59		0.40	
			Upper Surface				
x/c	CP	*x/c*	CP	*x/c*	CP	*x/c*	CP
0.020	0.022	0.000	0.891	0.000	-5.464**	0.010	-0.708**
0.060	-0.253	0.020	-0.352**	0.020	-0.218**	0.020	-0.625**
0.110	-0.425	0.040	-0.152	0.060	-1.133**	0.060	-0.821
0.200	-0.865	0.060	-0.431	0.090	-0.625	0.110	-0.897
0.230	-0.783	0.090	-0.515	0.110	-0.744	0.140	1.476**
0.400	-0.734	0.130	-0.641	0.130	-0.799	0.190	-5.331**
0.490	-0.694	0.150	-0.759	0.150	-0.866	0.250	-1.081
0.590	-0.671	0.200	-0.752	0.210	-0.947	0.400	-0.783
0.630	-0.622	0.250	-0.934	0.250	-0.896	0.490	-0.724
0.700	-0.635	0.260	-0.826	0.340	-0.967	0.580	-0.690
0.750	-0.152	0.280	-0.894	0.370	-0.956	0.650	-0.585
0.810	-0.195	0.290	-0.929	0.400	-0.942	0.700	-0.642
0.840	-0.122	0.310	-0.852	0.410	-0.919	0.750	-0.684
0.900	-0.156	0.320	-0.827	0.430	-0.994	0.800	-0.817
0.960	-0.100	0.340	-0.872	0.440	-0.968	0.830	-0.798
		0.350	-0.364**	0.460	-0.972	0.900	-0.316
		0.370	-0.856	0.490	-0.908	0.960	-0.234
		0.380	-0.868	0.500	-0.984		
		0.400	-0.805	0.520	-0.984		
		0.410	-0.893	0.540	-0.981		
		0.430	-0.894	0.550	-0.965		
		0.440	-0.821	0.580	-0.950		
		0.460	-0.975	0.600	-0.944		
		0.470	-0.910	0.610	-0.884		
		0.490	-0.865	0.650	-2.593**		
		0.500	-0.884	0.700	-0.756		
		0.520	-0.890	0.750	-0.592		
		0.530	-0.868	0.820	-0.462		
		0.550	-0.885	0.890	-0.363		
		0.560	-0.871	0.900	-0.369		
		0.580	-0.818	0.960	-0.324		
		0.590	-0.641				
		0.600	-0.506				
		0.640	-2.431**				
		0.700	-0.321				
		0.750	-0.271				
		0.820	-2.606**				
		0.870	-0.272				
		0.930	-0.281				
		0.960	-0.274				
			Lower Surface				
0.020	-0.388	0.020	-0.109	0.020	0.050	0.020	0.420
0.110	-0.174	0.060	0.128	0.060	0.265	0.060	3.401**
0.230	0.067	0.090	0.047	0.090	0.150	0.110	0.091
0.400	-0.126	0.120	0.026	0.120	-0.256	0.250	-0.005
0.490	-0.162	0.200	0.085	0.200	-0.032	0.400	-0.088
0.630	3.444**	0.260	-0.085	0.250	-0.007	0.490	-0.262
0.750	-0.078	0.400	-2.623**	0.400	-0.124	0.580	-0.381
0.850	0.023	0.490	-0.182	0.490	-0.020	0.650	-0.152
0.900	0.085	0.580	-0.160	0.580	-0.257	0.750	0.130
0.960	0.085	0.640	0.220	0.650	-0.033	0.830	0.289
		0.750	0.119	0.750	-0.015	0.900	0.354
		0.870	0.155	0.890	********	0.960	0.238
		0.930	0.121	0.930	0.204		
		0.960	0.002	0.960	-2.622**		
CN =	0.428		0.571		0.706		0.710

Table G-2. Continued.

Flight 198, Wing sweep = 26°, Time = 14-1-33-000, MINF = 0.900, Camber = 5/2, ALPT = 10.15, BETA = 0.39, QINF = 296.1, RNPU = 2.2E+06, CNWP = 0.4739

η = 0.93		0.76		0.59		0.40	
			Upper Surface				
x/c	CP	*x/c*	CP	*x/c*	CP	*x/c*	CP
0.020	-0.132	0.000	0.942	0.000	-5.512**	0.010	-0.708**
0.060	-0.397	0.020	-0.619**	0.020	-0.323**	0.020	-0.768**
0.110	-0.517	0.040	-0.254	0.060	-1.213**	0.060	-0.923
0.200	-0.939	0.060	-0.548	0.090	-0.720	0.110	-1.027
0.230	-0.810	0.090	-0.645	0.110	-0.866	0.140	-1.083**
0.400	-0.804	0.130	-0.751	0.130	-0.877	0.190	-5.378**
0.490	-0.750	0.150	-0.846	0.150	-0.956	0.250	-1.150
0.590	-0.706	0.200	-0.861	0.210	-1.028	0.400	-0.861
0.630	-0.597	0.250	-1.009	0.250	-0.994	0.490	-0.779
0.700	-0.356	0.260	-0.904	0.340	-1.041	0.580	-0.733
0.750	-0.238	0.280	-0.979	0.370	-1.025	0.650	-0.663
0.810	-0.235	0.290	-0.997	0.400	-1.019	0.700	-0.721
0.840	-0.202	0.310	-0.919	0.410	-0.989	0.750	-0.737
0.900	-0.214	0.320	-0.910	0.430	-1.083	0.800	-0.856
0.960	-0.204	0.340	-0.967	0.440	-1.037	0.830	-0.821
		0.350	-0.346**	0.460	-1.043	0.900	-0.273
		0.370	-0.920	0.490	-0.986	0.960	-0.182
		0.380	-0.955	0.500	-1.067		
		0.400	-0.862	0.520	-1.041		
		0.410	-0.973	0.540	-1.062		
		0.430	-0.946	0.550	-1.036		
		0.440	-0.864	0.580	-1.011		
		0.460	-1.056	0.600	-0.891		
		0.470	-0.851	0.610	-0.524		
		0.490	-0.680	0.650	-2.618**		
		0.500	-0.539	0.700	-0.507		
		0.520	-0.515	0.750	-0.581		
		0.530	-0.452	0.820	-0.510		
		0.550	-0.450	0.890	-0.464		
		0.560	-0.418	0.900	-0.448		
		0.580	-0.403	0.960	-0.425		
		0.590	-0.413				
		0.600	-0.444				
		0.640	-2.454**				
		0.700	-0.390				
		0.750	-0.316				
		0.820	-2.630**				
		0.870	-0.327				
		0.930	-0.319				
		0.960	-0.298				
			Lower Surface				
0.020	-0.118	0.020	0.128	0.020	0.236	0.020	0.565
0.110	-0.060	0.060	0.243	0.060	0.375	0.060	3.427**
0.230	0.107	0.090	0.161	0.090	0.237	0.110	0.187
0.400	-0.092	0.120	0.137	0.120	-0.163	0.250	0.071
0.490	-0.136	0.200	0.124	0.200	0.018	0.400	-0.031
0.630	3.470**	0.260	-0.011	0.250	0.080	0.490	-0.176
0.750	-0.093	0.400	-2.648**	0.400	-0.052	0.580	-0.324
0.850	-0.014	0.490	-0.141	0.490	-0.008	0.650	-0.111
0.900	0.045	0.580	-0.123	0.580	-0.225	0.750	0.153
0.960	0.019	0.640	0.242	0.650	-0.006	0.830	0.289
		0.750	0.101	0.750	0.005	0.900	0.363
		0.870	0.155	0.890	********	0.960	0.238
		0.930	0.097	0.930	0.180		
		0.960	-0.012	0.960	-2.647**		
CN =	0.488		0.622		0.772		0.815

Table G-2. Continued.

Flight 226, Wing sweep = 26°, Time = 10-7-8-500, MINF = 0.904, Camber = 5/2, ALPT = 6.15, BETA = -0.38, QINF = 297.9, RNPU = 2.3E+06, CNWP = 0.3388

η = 0.93		0.76		0.59		0.40	
			Upper Surface				
x/c	CP	*x/c*	CP	*x/c*	CP	*x/c*	CP
0.020	0.217	0.000	0.704	0.000	3.560**	0.010	-0.271
0.060	-0.091	0.020	-0.042	0.020	0.082	0.020	-0.162
0.110	-0.351	0.040	0.033	0.060	-4.712**	0.060	-0.561
0.200	-0.720	0.060	-0.224	0.090	-0.365	0.110	-0.690
0.230	-0.530	0.090	-0.285	0.110	-0.481	0.140	-0.889
0.400	-0.622	0.130	-0.433	0.130	-0.530	0.190	-1.750**
0.490	-0.541	0.150	-0.651	0.150	-0.802	0.250	-0.851
0.590	-0.568	0.200	-0.669	0.210	-0.673	0.400	-0.673
0.630	-0.464	0.250	-0.708	0.250	-0.728	0.490	-0.539
0.700	-0.148	0.260	-0.705	0.340	-0.727	0.580	-0.478
0.750	-0.145	0.280	-0.690	0.370	-0.743	0.650	-0.468
0.810	-0.143	0.290	-0.705	0.400	-0.829	0.700	-0.449
0.840	-0.086	0.310	-0.740	0.410	-2.753**	0.750	-0.546
0.900	-0.071	0.320	-0.707	0.430	-0.759	0.800	-0.675
0.960	0.021	0.340	-0.680	0.440	-0.719	0.830	-0.609
		0.350	-0.440**	0.460	-0.743	0.900	-0.166
		0.370	-0.712	0.490	-0.716	0.960	-0.125
		0.380	-0.727	0.500	-0.802		
		0.400	-0.772	0.520	-0.725		
		0.410	-0.716	0.540	-0.730		
		0.430	-0.668	0.550	-0.757		
		0.440	-0.664	0.580	-0.706		
		0.460	-0.743	0.600	-0.567		
		0.470	-0.665	0.610	-0.552		
		0.490	-0.740	0.650	2.181**		
		0.500	-0.772	0.700	-0.651		
		0.520	-0.768	0.750	-0.688		
		0.530	-0.745	0.820	-0.401		
		0.550	-0.788	0.890	-0.091		
		0.560	-0.679	0.900	-0.060		
		0.580	-0.762	0.960	-0.003		
		0.590	-0.806				
		0.600	-0.805				
		0.640	-0.796				
		0.700	-0.764				
		0.750	-0.032**				
		0.820	-0.158				
		0.870	-0.133				
		0.930	-0.070				
		0.960	-0.049				
			Lower Surface				
0.020	-1.181	0.020	-0.948	0.020	-0.638	0.020	0.083
0.110	-0.444	0.060	-0.128	0.060	0.005	0.060	1.889**
0.230	-0.046	0.090	-0.195	0.090	1.185**	0.110	-0.017
0.400	-0.120	0.120	-0.126	0.120	-0.400	0.250	-0.170
0.490	-0.040	0.200	-0.048	0.200	-0.110	0.400	-0.226
0.630	1.950**	0.260	-0.240	0.250	-0.156	0.490	-0.375
0.750	0.023	0.400	-0.231	0.400	-0.256	0.580	-0.462
0.850	0.133	0.490	-0.205	0.490	-0.070	0.650	-0.340
0.900	0.183	0.580	-0.191	0.580	-0.400	0.750	0.027
0.960	0.175	0.640	0.015	0.650	-0.055	0.830	0.244
		0.750	0.181	0.750	0.258	0.900	0.318
		0.870	0.239	0.890	0.217	0.960	0.239
		0.930	0.196	0.930	0.206		
		0.960	0.146	0.960	-2.840**		
CN =	0.296		0.462		0.472		0.455

Table G-2. Continued.

Flight 226, Wing sweep = 26°, Time = 10-7-21-500, MINF = 0.902, Camber = 5/2, ALPT = 7.05, BETA = -0.44, QINF = 297.5, RNPU = 2.3E+06, CNWP = 0.3831

η = 0.93		0.76		0.59		0.40	
			Upper Surface				
x/c	CP	*x/c*	CP	*x/c*	CP	*x/c*	CP
0.020	0.149	0.000	0.751	0.000	3.560**	0.010	-0.543
0.060	-0.119	0.020	-0.157	0.020	-0.018	0.020	-0.151
0.110	-0.336	0.040	-0.063	0.060	-4.721**	0.060	-0.565
0.200	-0.738	0.060	-0.321	0.090	-0.428	0.110	-0.774
0.230	-0.647	0.090	-0.348	0.110	-0.562	0.140	-0.947
0.400	-0.679	0.130	-0.499	0.130	-0.594	0.190	-1.756**
0.490	-0.578	0.150	-0.689	0.150	-0.815	0.250	-0.912
0.590	-0.608	0.200	-0.693	0.210	-0.735	0.400	-0.713
0.630	-0.518	0.250	-0.751	0.250	-0.777	0.490	-0.635
0.700	-0.308	0.260	-0.766	0.340	-0.770	0.580	-0.514
0.750	-0.149	0.280	-0.739	0.370	-0.795	0.650	-0.499
0.810	-0.163	0.290	-0.754	0.400	-0.900	0.700	-0.499
0.840	-0.082	0.310	-0.802	0.410	-2.759**	0.750	-0.595
0.900	-0.118	0.320	-0.776	0.430	-0.809	0.800	-0.701
0.960	-0.027	0.340	-0.719	0.440	-0.765	0.830	-0.665
		0.350	-0.445**	0.460	-0.790	0.900	-0.202
		0.370	-0.758	0.490	-0.789	0.960	-0.161
		0.380	-0.768	0.500	-0.835		
		0.400	-0.737	0.520	-0.781		
		0.410	-0.778	0.540	-0.805		
		0.430	-0.746	0.550	-0.851		
		0.440	-0.754	0.580	-0.835		
		0.460	-0.784	0.600	-0.756		
		0.470	-0.736	0.610	-0.733		
		0.490	-0.803	0.650	2.179**		
		0.500	-0.833	0.700	-0.785		
		0.520	-0.813	0.750	-0.812		
		0.530	-0.792	0.820	-0.314		
		0.550	-0.863	0.890	-0.143		
		0.560	-0.742	0.900	-0.127		
		0.580	-0.807	0.960	-0.064		
		0.590	-0.864				
		0.600	-0.884				
		0.640	-0.750				
		0.700	-0.341				
		0.750	-0.051**				
		0.820	-0.185				
		0.870	-0.189				
		0.930	-0.189				
		0.960	-0.178				
			Lower Surface				
0.020	-0.915	0.020	-0.702	0.020	-0.141	0.020	0.179
0.110	-0.221	0.060	-0.064	0.060	0.028	0.060	1.887**
0.230	-0.024	0.090	-0.140	0.090	1.182**	0.110	-0.006
0.400	-0.143	0.120	-0.101	0.120	-0.337	0.250	-0.121
0.490	-0.134	0.200	-0.023	0.200	-0.129	0.400	-0.189
0.630	1.948**	0.260	-0.216	0.250	-0.124	0.490	-0.342
0.750	-0.031	0.400	-0.223	0.400	-0.215	0.580	-0.431
0.850	0.087	0.490	-0.228	0.490	-0.074	0.650	-0.269
0.900	0.175	0.580	-0.215	0.580	-0.272	0.750	0.043
0.960	0.150	0.640	0.000	0.650	-0.059	0.830	0.266
		0.750	0.161	0.750	0.232	0.900	0.317
		0.870	0.226	0.890	0.210	0.960	0.230
		0.930	0.149	0.930	0.188		
		0.960	0.079	0.960	-2.847**		
CN =	0.341		0.466		0.553		0.529

Table G-2. Continued.

Flight 226, Wing sweep = 26°, Time = 10-7-24-000, MINF = 0.901, Camber = 5/2, ALPT = 7.03, BETA = -0.85, QINF = 296.4, RNPU = 2.2E+06, CNWP = 0.3873

η = 0.93		0.76		0.59		0.40	
			Upper Surface				
x/c	CP	x/c	CP	x/c	CP	x/c	CP
0.020	0.159	0.000	0.752	0.000	3.575**	0.010	-0.528
0.060	-0.132	0.020	-0.179	0.020	-0.032	0.020	-0.171
0.110	-0.367	0.040	-0.057	0.060	-4.737**	0.060	-0.587
0.200	-0.739	0.060	-0.321	0.090	-0.454	0.110	-0.780
0.230	-0.685	0.090	-0.341	0.110	-0.572	0.140	-0.952
0.400	-0.669	0.130	-0.494	0.130	-0.595	0.190	-1.761**
0.490	-0.590	0.150	-0.698	0.150	-0.842	0.250	-0.914
0.590	-0.605	0.200	-0.715	0.210	-0.726	0.400	-0.706
0.630	-0.511	0.250	-0.765	0.250	-0.770	0.490	-0.625
0.700	-0.213	0.260	-0.752	0.340	-0.786	0.580	-0.525
0.750	-0.152	0.280	-0.749	0.370	-0.789	0.650	-0.499
0.810	-0.154	0.290	-0.740	0.400	-0.872	0.700	-0.510
0.840	-0.104	0.310	-0.791	0.410	-2.768**	0.750	-0.610
0.900	-0.099	0.320	-0.782	0.430	-0.810	0.800	-0.717
0.960	-0.032	0.340	-0.712	0.440	-0.756	0.830	-0.651
		0.350	-0.445**	0.460	-0.791	0.900	-0.177
		0.370	-0.747	0.490	-0.782	0.960	-0.137
		0.380	-0.784	0.500	-0.837		
		0.400	-0.712	0.520	-0.784		
		0.410	-0.783	0.540	-0.806		
		0.430	-0.732	0.550	-0.832		
		0.440	-0.719	0.580	-0.818		
		0.460	-0.800	0.600	-0.742		
		0.470	-0.703	0.610	-0.719		
		0.490	-0.813	0.650	2.189**		
		0.500	-0.807	0.700	-0.764		
		0.520	-0.814	0.750	-0.813		
		0.530	-0.785	0.820	-0.288		
		0.550	-0.803	0.890	-0.127		
		0.560	-0.734	0.900	-0.105		
		0.580	-0.807	0.960	-0.034		
		0.590	-0.855				
		0.600	-0.866				
		0.640	-0.726				
		0.700	-0.318				
		0.750	-0.045**				
		0.820	-0.169				
		0.870	-0.181				
		0.930	-0.155				
		0.960	-0.129				
			Lower Surface				
0.020	-0.875	0.020	-0.674	0.020	-0.155	0.020	0.175
0.110	-0.227	0.060	-0.063	0.060	0.069	0.060	1.896**
0.230	-0.015	0.090	-0.124	0.090	1.188**	0.110	-0.009
0.400	-0.127	0.120	-0.085	0.120	-0.337	0.250	-0.120
0.490	-0.125	0.200	-0.014	0.200	-0.092	0.400	-0.189
0.630	1.957**	0.260	-0.200	0.250	-0.111	0.490	-0.341
0.750	-0.022	0.400	-0.184	0.400	-0.215	0.580	-0.426
0.850	0.089	0.490	-0.204	0.490	-0.073	0.650	-0.178
0.900	0.178	0.580	-0.191	0.580	-0.213	0.750	0.054
0.960	0.152	0.640	0.017	0.650	-0.073	0.830	0.280
		0.750	0.172	0.750	0.246	0.900	0.314
		0.870	0.182	0.890	0.227	0.960	0.226
		0.930	0.151	0.930	0.190		
		0.960	0.111	0.960	-2.856**		
CN =	0.348		0.467		0.560		0.538

Table G-2. Continued.

Flight 226, Wing sweep = 26°, Time = 10-7-30-500, MINF = 0.904, Camber = 5/2, ALPT = 7.99, BETA = -0.67, QINF = 298.4, RNPU = 2.3E+06, CNWP = 0.4302

η = 0.93		0.76		0.59		0.40	
			Upper Surface				
x/c	CP	*x/c*	CP	*x/c*	CP	*x/c*	CP
0.020	0.061	0.000	0.792	0.000	3.552**	0.010	-0.594
0.060	-0.169	0.020	-0.273	0.020	-0.114	0.020	-0.516
0.110	-0.353	0.040	-0.160	0.060	-4.707**	0.060	-0.668
0.200	-0.742	0.060	-0.413	0.090	-0.531	0.110	-0.834
0.230	-0.666	0.090	-0.444	0.110	-0.636	0.140	-1.000
0.400	-0.714	0.130	-0.553	0.130	-0.648	0.190	-1.750**
0.490	-0.642	0.150	-0.743	0.150	-0.904	0.250	-0.994
0.590	-0.659	0.200	-0.741	0.210	-0.778	0.400	-0.758
0.630	-0.585	0.250	-0.784	0.250	-0.831	0.490	-0.674
0.700	-0.504	0.260	-0.780	0.340	-0.827	0.580	-0.585
0.750	-0.164	0.280	-0.788	0.370	-0.825	0.650	-0.547
0.810	-0.175	0.290	-0.788	0.400	-0.926	0.700	-0.534
0.840	-0.111	0.310	-0.845	0.410	-2.751**	0.750	-0.628
0.900	-0.150	0.320	-0.829	0.430	-0.851	0.800	-0.733
0.960	-0.067	0.340	-0.741	0.440	-0.804	0.830	-0.684
		0.350	-0.418**	0.460	-0.838	0.900	-0.240
		0.370	-0.794	0.490	-0.831	0.960	-0.183
		0.380	-0.820	0.500	-0.879		
		0.400	-0.763	0.520	-0.798		
		0.410	-0.815	0.540	-0.826		
		0.430	-0.786	0.550	-0.894		
		0.440	-0.779	0.580	-0.884		
		0.460	-0.840	0.600	-0.810		
		0.470	-0.738	0.610	-0.796		
		0.490	-0.836	0.650	2.174**		
		0.500	-0.868	0.700	-0.932		
		0.520	-0.872	0.750	-0.912		
		0.530	-0.823	0.820	-0.280		
		0.550	-0.926	0.890	-0.180		
		0.560	-0.765	0.900	-0.196		
		0.580	-0.863	0.960	-0.133		
		0.590	-0.908				
		0.600	-0.900				
		0.640	-0.330				
		0.700	-0.287				
		0.750	-0.034**				
		0.820	-0.202				
		0.870	-0.235				
		0.930	-0.206				
		0.960	-0.217				
			Lower Surface				
0.020	-0.720	0.020	-0.301	0.020	-0.030	0.020	0.312
0.110	-0.220	0.060	0.005	0.060	0.149	0.060	1.883**
0.230	-0.003	0.090	-0.065	0.090	1.180**	0.110	0.071
0.400	-0.126	0.120	-0.018	0.120	-0.275	0.250	-0.076
0.490	-0.110	0.200	0.008	0.200	-0.058	0.400	-0.151
0.630	1.944**	0.260	-0.148	0.250	-0.048	0.490	-0.306
0.750	-0.061	0.400	-0.169	0.400	-0.174	0.580	-0.379
0.850	0.037	0.490	-0.207	0.490	-0.058	0.650	-0.170
0.900	0.138	0.580	-0.187	0.580	-0.234	0.750	0.063
0.960	0.113	0.640	0.009	0.650	-0.065	0.830	0.297
		0.750	0.160	0.750	0.237	0.900	0.312
		0.870	0.204	0.890	0.211	0.960	0.218
		0.930	0.121	0.930	0.166		
		0.960	0.047	0.960	-2.838**		
CN =	0.383		0.505		0.641		0.630

Table G-2. Continued.

Flight 226, Wing sweep = 26°, Time = 10-7-40-000, MINF = 0.903, Camber = 5/2, ALPT = 12.02, BETA = -0.70, QINF = 304.2, RNPU = 2.3E+06, CNWP = 0.3996

η = 0.93		0.76		0.59		0.40	
			Upper Surface				
x/c	CP	*x/c*	CP	*x/c*	CP	*x/c*	CP
0.020	-0.616	0.000	0.826	0.000	3.447**	0.010	-0.838
0.060	-0.594	0.020	-0.896	0.020	-0.733	0.020	-0.920
0.110	-0.714	0.040	-0.594	0.060	-4.654**	0.060	-0.998
0.200	-0.904	0.060	-0.764	0.090	-0.852	0.110	-1.082
0.230	-0.861	0.090	-0.794	0.110	-0.942	0.140	-1.220
0.400	-0.871	0.130	-0.876	0.130	-0.937	0.190	-1.753**
0.490	-0.680	0.150	-1.017	0.150	-1.145	0.250	-1.261
0.590	-0.522	0.200	-0.994	0.210	-1.002	0.400	-1.023
0.630	-0.480	0.250	-1.001	0.250	-1.065	0.490	-0.923
0.700	-0.401	0.260	-1.007	0.340	-1.056	0.580	-0.700
0.750	-0.441	0.280	-0.972	0.370	-1.033	0.650	-0.610
0.810	-0.404	0.290	-0.955	0.400	-1.076	0.700	-0.588
0.840	-0.360	0.310	-1.010	0.410	-2.735**	0.750	-0.652
0.900	-0.367	0.320	-0.977	0.430	-0.886	0.800	-0.671
0.960	-0.377	0.340	-0.828	0.440	-0.736	0.830	-0.502
		0.350	-0.354**	0.460	-0.688	0.900	-0.370
		0.370	-0.718	0.490	-0.629	0.960	-0.286
		0.380	-0.680	0.500	-0.660		
		0.400	-0.579	0.520	-0.575		
		0.410	-0.586	0.540	-0.603		
		0.430	-0.559	0.550	-0.628		
		0.440	-0.555	0.580	-0.653		
		0.460	-0.594	0.600	-0.574		
		0.470	-0.512	0.610	-0.548		
		0.490	-0.560	0.650	2.096**		
		0.500	-0.623	0.700	-0.596		
		0.520	-0.580	0.750	-0.684		
		0.530	-0.535	0.820	-0.525		
		0.550	-0.588	0.890	-0.484		
		0.560	-0.489	0.900	-0.504		
		0.580	-0.563	0.960	-0.421		
		0.590	-0.569				
		0.600	-0.575				
		0.640	-0.463				
		0.700	-0.451				
		0.750	-0.055**				
		0.820	-0.418				
		0.870	-0.432				
		0.930	-0.406				
		0.960	-0.386				
			Lower Surface				
0.020	0.024	0.020	0.333	0.020	0.438	0.020	0.680
0.110	-0.006	0.060	0.309	0.060	0.427	0.060	1.811**
0.230	0.116	0.090	0.179	0.090	1.121**	0.110	0.297
0.400	-0.054	0.120	0.191	0.120	-0.026	0.250	0.123
0.490	-0.086	0.200	0.137	0.200	0.070	0.400	0.017
0.630	1.870**	0.260	0.039	0.250	0.118	0.490	-0.120
0.750	-0.125	0.400	-0.032	0.400	-0.041	0.580	-0.261
0.850	-0.081	0.490	-0.117	0.490	-0.064	0.650	-0.101
0.900	-0.028	0.580	-0.164	0.580	-0.165	0.750	0.078
0.960	-0.127	0.640	0.004	0.650	-0.070	0.830	0.296
		0.750	0.132	0.750	0.272	0.900	0.313
		0.870	0.139	0.890	0.186	0.960	0.192
		0.930	0.050	0.930	0.119		
		0.960	-0.019	0.960	-2.821**		
CN =	0.550		0.677		0.791		0.906

Table G-2. Continued.

Flight 226, Wing sweep = 26°, Time = 10-7-43-000, MINF = 0.898, Camber = 5/2, ALPT = 12.15, BETA = -0.10, QINF = 305.7, RNPU = 2.3E+06, CNWP = 0.3509

η = 0.93		0.76		0.59		0.40	
			Upper Surface				
x/c	CP	*x/c*	CP	*x/c*	CP	*x/c*	CP
0.020	-0.595	0.000	0.835	0.000	3.402**	0.010	-0.853
0.060	-0.599	0.020	-0.909	0.020	-0.751	0.020	-0.935
0.110	-0.766	0.040	-0.622	0.060	-4.658**	0.060	-0.971
0.200	-0.892	0.060	-0.774	0.090	-0.857	0.110	-1.132
0.230	-0.873	0.090	-0.797	0.110	-0.945	0.140	-1.247
0.400	-0.909	0.130	-0.883	0.130	-0.928	0.190	-1.772**
0.490	-0.700	0.150	-1.022	0.150	-1.154	0.250	-1.268
0.590	-0.481	0.200	-1.004	0.210	-1.029	0.400	-0.976
0.630	-0.461	0.250	-0.871	0.250	-1.072	0.490	-0.815
0.700	-0.387	0.260	-0.741	0.340	-0.947	0.580	-0.798
0.750	-0.456	0.280	-0.803	0.370	-0.919	0.650	-0.695
0.810	-0.492	0.290	-0.812	0.400	-1.019	0.700	-0.634
0.840	-0.422	0.310	-0.791	0.410	-2.749**	0.750	-0.612
0.900	-0.302	0.320	-0.744	0.430	-0.733	0.800	-0.604
0.960	-0.273	0.340	-0.569	0.440	-0.660	0.830	-0.534
		0.350	-0.304**	0.460	-0.694	0.900	-0.455
		0.370	-0.555	0.490	-0.647	0.960	-0.375
		0.380	-0.595	0.500	-0.683		
		0.400	-0.521	0.520	-0.620		
		0.410	-0.575	0.540	-0.625		
		0.430	-0.520	0.550	-0.648		
		0.440	-0.539	0.580	-0.614		
		0.460	-0.578	0.600	-0.558		
		0.470	-0.515	0.610	-0.544		
		0.490	-0.552	0.650	2.057**		
		0.500	-0.576	0.700	-0.606		
		0.520	-0.576	0.750	-0.682		
		0.530	-0.549	0.820	-0.492		
		0.550	-0.593	0.890	-0.476		
		0.560	-0.497	0.900	-0.505		
		0.580	-0.565	0.960	-0.411		
		0.590	-0.582				
		0.600	-0.581				
		0.640	-0.489				
		0.700	-0.469				
		0.750	-0.050**				
		0.820	-0.492				
		0.870	-0.511				
		0.930	-0.439				
		0.960	-0.405				
			Lower Surface				
0.020	0.005	0.020	0.357	0.020	0.438	0.020	0.690
0.110	0.002	0.060	0.316	0.060	0.439	0.060	1.773**
0.230	0.124	0.090	0.185	0.090	1.087**	0.110	0.297
0.400	-0.049	0.120	0.198	0.120	-0.016	0.250	0.127
0.490	-0.084	0.200	0.145	0.200	0.071	0.400	0.018
0.630	1.832**	0.260	0.048	0.250	0.141	0.490	-0.118
0.750	-0.138	0.400	-0.030	0.400	-0.025	0.580	-0.233
0.850	-0.072	0.490	-0.119	0.490	-0.092	0.650	-0.110
0.900	-0.005	0.580	-0.170	0.580	-0.170	0.750	0.098
0.960	-0.064	0.640	0.002	0.650	-0.098	0.830	0.304
		0.750	0.132	0.750	0.261	0.900	0.313
		0.870	0.121	0.890	0.186	0.960	0.181
		0.930	0.051	0.930	0.120		
		0.960	-0.010	0.960	-2.835**		
CN =	0.563		0.664		0.775		0.922

Table G-2. Continued.

Flight 200, Wing sweep = 26°, Time = 8-21-10-000, MINF = 0.898, Camber = 5/6, ALPT = 5.01, BETA = 0.45, QINF = 294.2, RNPU = 2.2E+06, CNWP = 0.3343

η = 0.93		0.76		0.59		0.40	
			Upper Surface				
x/c	CP	*x/c*	CP	*x/c*	CP	*x/c*	CP
0.020	0.347	0.000	0.640	0.000	0.953**	0.010	-0.062
0.060	0.019	0.020	0.175	0.020	0.267	0.020	-0.001**
0.110	-0.222	0.040	0.160	0.060	0.859**	0.060	-0.377**
0.200	-0.741	0.060	-0.101	0.090	-0.217	0.110	-0.580
0.230	-0.625	0.090	-0.200	0.110	-0.446	0.140	-0.767
0.400	-0.482	0.130	-0.349	0.130	-0.498	0.190	-1.771**
0.490	-0.391	0.150	-0.559	0.150	-0.680	0.250	-0.598
0.590	-0.168	0.200	-0.588	0.210	-0.657	0.400	-0.603
0.630	-0.187	0.250	-0.680	0.250	-0.644	0.490	-0.378
0.700	-0.199	0.260	-0.616	0.340	-0.696	0.580	-0.315
0.750	-0.584	0.280	-0.653	0.370	-0.714	0.650	-0.365
0.810	-0.542	0.290	-0.644	0.400	-0.686	0.700	-0.360
0.840	-0.564	0.310	-0.625	0.410	-0.673	0.750	-0.460
0.900	-0.096	0.320	-0.622	0.430	-0.674	0.800	-0.841
0.960	-0.017	0.340	-0.610	0.440	-0.650	0.830	-0.785
		0.350	-0.314**	0.460	-0.653	0.900	-0.251
		0.370	-0.617	0.490	-0.516	0.960	-0.246**
		0.380	-0.673	0.500	-0.577		
		0.400	-0.585	0.520	-0.501		
		0.410	-0.642	0.540	-0.441		
		0.430	-0.614	0.550	-0.341		
		0.440	-0.572	0.580	-0.278		
		0.460	-0.653	0.600	-0.302		
		0.470	-0.623	0.610	-0.275		
		0.490	-0.626	0.650	0.039**		
		0.500	-0.620	0.700	-0.450		
		0.520	-0.620	0.750	-0.521		
		0.530	-0.614	0.820	-0.454		
		0.550	-0.633	0.890	-0.238		
		0.560	-0.643	0.900	-0.225		
		0.580	-0.619	0.960	-0.155		
		0.590	-0.674				
		0.600	-0.682				
		0.640	-0.475				
		0.700	-0.476				
		0.750	0.042**				
		0.820	-0.465				
		0.870	-0.202				
		0.930	-0.109				
		0.960	-0.095				
			Lower Surface				
0.020	-1.234	0.020	-1.117	0.020	-0.948	0.020	-0.117
0.110	-0.431	0.060	-0.813	0.060	-0.170	0.060	-0.121
0.230	-0.046	0.090	-0.351	0.090	-0.198	0.110	-0.192
0.400	-0.028	0.120	-0.220**	0.120	-0.431	0.250	-0.229
0.490	-0.008	0.200	-0.034	0.200	-0.096	0.400	-0.280
0.630	3.688**	0.260	-0.195	0.250	-0.251	0.490	-0.393
0.750	0.137	0.400	-0.121	0.400	-0.312	0.580	-0.431
0.850	0.201	0.490	-0.086	0.490	0.015	0.650	0.007
0.900	0.299	0.580	-0.038	0.580	-0.097	0.750	0.232
0.960	0.198	0.640	0.178	0.650	0.036	0.830	0.364
		0.750	0.295	0.750	0.000**	0.900	0.437
		0.870	0.361	0.890	0.397	0.960	0.299
		0.930	0.299	0.930	0.317		
		0.960	0.214	0.960	0.802		
CN =	0.340		0.430		0.428		0.392

Table G-2. Continued.

Flight 200, Wing sweep = 26°, Time = 8-21-25-000, MINF = 0.907, Camber = 5/6, ALPT = 6.11, BETA = 0.14, QINF = 298.6, RNPU = 2.3E+06, CNWP = 0.3882

η = 0.93		0.76		0.59		0.40	
			Upper Surface				
x/c	CP	*x/c*	CP	*x/c*	CP	*x/c*	CP
0.020	0.297	0.000	0.703	0.000	0.933**	0.010	-0.228
0.060	-0.030	0.020	0.114	0.020	0.147	0.020	-0.094**
0.110	-0.239	0.040	0.109	0.060	0.717**	0.060	-0.454**
0.200	-0.748	0.060	-0.151	0.090	-0.265	0.110	-0.650
0.230	-0.654	0.090	-0.251	0.110	-0.496	0.140	-0.832
0.400	-0.563	0.130	-0.390	0.130	-0.546	0.190	-1.736**
0.490	-0.478	0.150	-0.595	0.150	-0.709	0.250	-0.820
0.590	-0.483	0.200	-0.627	0.210	-0.704	0.400	-0.621
0.630	-0.416	0.250	-0.728	0.250	-0.691	0.490	-0.496
0.700	-0.473	0.260	-0.674	0.340	-0.751	0.580	-0.419
0.750	-0.556	0.280	-0.707	0.370	-0.778	0.650	-0.436
0.810	-0.518	0.290	-0.698	0.400	-0.769	0.700	-0.436
0.840	-0.538	0.310	-0.665	0.410	-0.730	0.750	-0.517
0.900	-0.118	0.320	-0.681	0.430	-0.745	0.800	-0.865
0.960	-0.033	0.340	-0.676	0.440	-0.732	0.830	-0.797
		0.350	-0.345**	0.460	-0.766	0.900	-0.335
		0.370	-0.683	0.490	-0.725	0.960	-0.311**
		0.380	-0.728	0.500	-0.777		
		0.400	-0.636	0.520	-0.751		
		0.410	-0.696	0.540	-0.740		
		0.430	-0.668	0.550	-0.664		
		0.440	-0.635	0.580	-0.542		
		0.460	-0.723	0.600	-0.559		
		0.470	-0.712	0.610	-0.533		
		0.490	-0.703	0.650	0.015**		
		0.500	-0.701	0.700	-0.548		
		0.520	-0.693	0.750	-0.592		
		0.530	-0.682	0.820	-0.449		
		0.550	-0.684	0.890	-0.272		
		0.560	-0.701	0.900	-0.276		
		0.580	-0.683	0.960	-0.225		
		0.590	-0.738				
		0.600	-0.726				
		0.640	-0.747				
		0.700	-0.800				
		0.750	0.033**				
		0.820	-0.210				
		0.870	-0.212				
		0.930	-0.224				
		0.960	-0.212				
			Lower Surface				
0.020	-1.169	0.020	-1.011	0.020	-0.782	0.020	0.032
0.110	-0.155	0.060	-0.251	0.060	-0.030	0.060	-0.043
0.230	-0.034	0.090	-0.210	0.090	-0.088	0.110	-0.087
0.400	-0.066	0.120	-0.149**	0.120	-0.367	0.250	-0.186
0.490	-0.020	0.200	-0.002	0.200	-0.074	0.400	-0.223
0.630	3.643**	0.260	-0.190	0.250	-0.179	0.490	-0.362
0.750	0.096	0.400	-0.142	0.400	-0.263	0.580	-0.464
0.850	0.163	0.490	-0.109	0.490	-0.005	0.650	-0.005
0.900	0.270	0.580	-0.061	0.580	-0.101	0.750	0.223
0.960	0.175	0.640	0.156	0.650	0.009	0.830	0.360
		0.750	0.286	0.750	-0.020**	0.900	0.443
		0.870	0.327	0.890	0.415	0.960	0.293
		0.930	0.278	0.930	0.311		
		0.960	0.184	0.960	0.778		
CN =	0.435		0.523		0.539		0.501

Table G-2. Continued.

Flight 200, Wing sweep = 26°, Time = 8-21-28-500, MINF = 0.908, Camber = 5/6, ALPT = 6.99, BETA = 0.08, QINF = 299.1, RNPU = 2.3E+06, CNWP = 0.4526

η = 0.93		0.76		0.59		0.40	
			Upper Surface				
x/c	CP	*x/c*	CP	*x/c*	CP	*x/c*	CP
0.020	0.207	0.000	0.781	0.000	0.910**	0.010	-0.456
0.060	-0.092	0.020	-0.006	0.020	0.056	0.020	-0.190**
0.110	-0.202	0.040	0.022	0.060	0.628**	0.060	-0.524**
0.200	-0.761	0.060	-0.230	0.090	-0.377	0.110	-0.715
0.230	-0.630	0.090	-0.298	0.110	-0.564	0.140	-0.922
0.400	-0.624	0.130	-0.435	0.130	-0.586	0.190	-1.735**
0.490	-0.523	0.150	-0.626	0.150	-0.752	0.250	-0.905
0.590	-0.531	0.200	-0.664	0.210	-0.736	0.400	-0.663
0.630	-0.472	0.250	-0.764	0.250	-0.750	0.490	-0.595
0.700	-0.528	0.260	-0.722	0.340	-0.798	0.580	-0.467
0.750	-0.515	0.280	-0.746	0.370	-0.811	0.650	-0.493
0.810	-0.612	0.290	-0.737	0.400	-0.829	0.700	-0.485
0.840	-0.732	0.310	-0.724	0.410	-0.800	0.750	-0.576
0.900	-0.157	0.320	-0.720	0.430	-0.806	0.800	-0.896
0.960	-0.116	0.340	-0.731	0.440	-0.791	0.830	-0.834
		0.350	-0.315**	0.460	-0.816	0.900	-0.380
		0.370	-0.724	0.490	-0.771	0.960	-0.362**
		0.380	-0.803	0.500	-0.828		
		0.400	-0.707	0.520	-0.804		
		0.410	-0.765	0.540	-0.822		
		0.430	-0.741	0.550	-0.810		
		0.440	-0.689	0.580	-0.786		
		0.460	-0.768	0.600	-0.789		
		0.470	-0.750	0.610	-0.750		
		0.490	-0.753	0.650	0.019**		
		0.500	-0.753	0.700	-0.699		
		0.520	-0.749	0.750	-0.726		
		0.530	-0.732	0.820	-0.276		
		0.550	-0.757	0.890	-0.301		
		0.560	-0.751	0.900	-0.297		
		0.580	-0.742	0.960	-0.240		
		0.590	-0.799				
		0.600	-0.796				
		0.640	-0.815				
		0.700	-0.855				
		0.750	0.031**				
		0.820	-0.238				
		0.870	-0.250				
		0.930	-0.247				
		0.960	-0.232				
			Lower Surface				
0.020	-0.889	0.020	-0.744	0.020	-0.284	0.020	0.192
0.110	-0.168	0.060	-0.050	0.060	0.069	0.060	0.029
0.230	0.016	0.090	-0.107	0.090	-0.005	0.110	0.028
0.400	-0.057	0.120	-0.056**	0.120	-0.268	0.250	-0.114
0.490	-0.044	0.200	0.029	0.200	-0.020	0.400	-0.188
0.630	3.636**	0.260	-0.123	0.250	-0.093	0.490	-0.296
0.750	0.074	0.400	-0.122	0.400	-0.170	0.580	-0.320
0.850	0.133	0.490	-0.095	0.490	0.008	0.650	-0.007
0.900	0.239	0.580	-0.055	0.580	-0.102	0.750	0.235
0.960	0.129	0.640	0.172	0.650	0.014	0.830	0.385
		0.750	0.275	0.750	-0.007**	0.900	0.453
		0.870	0.349	0.890	0.405	0.960	0.305
		0.930	0.265	0.930	0.316		
		0.960	0.163	0.960	0.798		
CN =	0.467		0.602		0.641		0.608

Table G-2. Continued.

Flight 200, Wing sweep = 26°, Time = 8-21-32-500, MINF = 0.903, Camber = 5/6, ALPT = 8.15, BETA = 0.17, QINF = 296.9, RNPU = 2.2E+06, CNWP = 0.5111

η = 0.93		0.76		0.59		0.40	
			Upper Surface				
x/c	CP	*x/c*	CP	*x/c*	CP	*x/c*	CP
0.020	0.075	0.000	0.837	0.000	0.813**	0.010	-0.622
0.060	-0.154	0.020	-0.164	0.020	-0.085	0.020	-0.518**
0.110	-0.324	0.040	-0.096	0.060	0.494**	0.060	-0.617**
0.200	-0.784	0.060	-0.346	0.090	-0.511	0.110	-0.844
0.230	-0.686	0.090	-0.409	0.110	-0.682	0.140	-1.023
0.400	-0.675	0.130	-0.535	0.130	-0.684	0.190	-1.752**
0.490	-0.569	0.150	-0.696	0.150	-0.821	0.250	-1.002
0.590	-0.605	0.200	-0.725	0.210	-0.821	0.400	-0.743
0.630	-0.538	0.250	-0.839	0.250	-0.833	0.490	-0.656
0.700	-0.593	0.260	-0.786	0.340	-0.869	0.580	-0.534
0.750	-0.448	0.280	-0.817	0.370	-0.901	0.650	-0.557
0.810	-0.483	0.290	-0.817	0.400	-0.892	0.700	-0.545
0.840	-0.608	0.310	-0.801	0.410	-0.873	0.750	-0.629
0.900	-0.228	0.320	-0.797	0.430	-0.892	0.800	-0.946
0.960	-0.193	0.340	-0.791	0.440	-0.874	0.830	-0.890
		0.350	-0.322**	0.460	-0.899	0.900	-0.446
		0.370	-0.796	0.490	-0.842	0.960	-0.410**
		0.380	-0.863	0.500	-0.906		
		0.400	-0.779	0.520	-0.848		
		0.410	-0.843	0.540	-0.887		
		0.430	-0.806	0.550	-0.894		
		0.440	-0.769	0.580	-0.870		
		0.460	-0.850	0.600	-0.882		
		0.470	-0.825	0.610	-0.855		
		0.490	-0.826	0.650	0.015**		
		0.500	-0.823	0.700	-0.913		
		0.520	-0.822	0.750	-0.882		
		0.530	-0.806	0.820	-0.180		
		0.550	-0.831	0.890	-0.340		
		0.560	-0.836	0.900	-0.341		
		0.580	-0.820	0.960	-0.286		
		0.590	-0.877				
		0.600	-0.886				
		0.640	-0.857				
		0.700	-0.423				
		0.750	0.030**				
		0.820	-0.260				
		0.870	-0.282				
		0.930	-0.287				
		0.960	-0.272				
			Lower Surface				
0.020	-0.694	0.020	-0.266	0.020	-0.055	0.020	0.314
0.110	-0.160	0.060	0.040	0.060	0.151	0.060	0.091
0.230	0.050	0.090	-0.018	0.090	0.080	0.110	0.085
0.400	-0.050	0.120	0.006**	0.120	-0.205	0.250	-0.059
0.490	-0.049	0.200	0.058	0.200	0.006	0.400	-0.127
0.630	3.659**	0.260	-0.066	0.250	-0.032	0.490	-0.220
0.750	0.059	0.400	-0.093	0.400	-0.091	0.580	-0.246
0.850	0.107	0.490	-0.085	0.490	0.014	0.650	-0.004
0.900	0.212	0.580	-0.060	0.580	-0.093	0.750	0.252
0.960	0.080	0.640	0.161	0.650	0.025	0.830	0.392
		0.750	0.273	0.750	-0.011**	0.900	0.458
		0.870	0.319	0.890	0.412	0.960	0.297
		0.930	0.252	0.930	0.303		
		0.960	0.142	0.960	0.816		
CN =	0.500		0.638		0.752		0.716

Table G-2. Continued.

Flight 200, Wing sweep = 26°, Time = 8-21-41-000, MINF = 0.889, Camber = 5/6, ALPT = 9.11, BETA = 0.25, QINF = 289.3, RNPU = 2.2E+06, CNWP = 0.5676

η = 0.93		0.76		0.59		0.40	
			Upper Surface				
x/c	CP	*x/c*	CP	*x/c*	CP	*x/c*	CP
0.020	-0.084	0.000	0.897	0.000	0.819**	0.010	-0.683
0.060	-0.342	0.020	-0.324	0.020	-0.273	0.020	-0.684**
0.110	-0.468	0.040	-0.210	0.060	0.390**	0.060	-0.732**
0.200	-0.823	0.060	-0.511	0.090	-0.644	0.110	-0.947
0.230	-0.741	0.090	-0.569	0.110	-0.810	0.140	-1.104
0.400	-0.754	0.130	-0.657	0.130	-0.792	0.190	-1.808**
0.490	-0.665	0.150	-0.820	0.150	-0.944	0.250	-1.111
0.590	-0.656	0.200	-0.830	0.210	-0.918	0.400	-0.828
0.630	-0.592	0.250	-0.932	0.250	-0.931	0.490	-0.717
0.700	-0.654	0.260	-0.886	0.340	-0.995	0.580	-0.625
0.750	-0.299	0.280	-0.926	0.370	-1.002	0.650	-0.625
0.810	-0.275	0.290	-0.917	0.400	-0.964	0.700	-0.625
0.840	-0.287	0.310	-0.895	0.410	-0.971	0.750	-0.693
0.900	-0.294	0.320	-0.890	0.430	-0.988	0.800	-0.846
0.960	-0.200	0.340	-0.887	0.440	-0.972	0.830	-0.846
		0.350	-0.326**	0.460	-0.994	0.900	-0.396
		0.370	-0.895	0.490	-0.930	0.960	-0.376**
		0.380	-0.964	0.500	-0.997		
		0.400	-0.859	0.520	-0.972		
		0.410	-0.932	0.540	-0.989		
		0.430	-0.897	0.550	-0.974		
		0.440	-0.838	0.580	-0.963		
		0.460	-0.951	0.600	-0.987		
		0.470	-0.927	0.610	-0.955		
		0.490	-0.925	0.650	0.032**		
		0.500	-0.949	0.700	-0.852		
		0.520	-0.920	0.750	-0.608		
		0.530	-0.905	0.820	-0.212		
		0.550	-0.898	0.890	-0.408		
		0.560	-0.921	0.900	-0.395		
		0.580	-0.897	0.960	-0.335		
		0.590	-0.889				
		0.600	-0.741				
		0.640	-0.337				
		0.700	-0.353				
		0.750	0.051**				
		0.820	-0.273				
		0.870	-0.291				
		0.930	-0.305				
		0.960	-0.289				
			Lower Surface				
0.020	-0.235	0.020	-0.002	0.020	0.110	0.020	0.448
0.110	-0.075	0.060	0.155	0.060	0.243	0.060	0.167
0.230	0.103	0.090	0.087	0.090	0.175	0.110	0.128
0.400	-0.020	0.120	0.094**	0.120	-0.110	0.250	0.014
0.490	-0.015	0.200	0.110	0.200	0.072	0.400	-0.065
0.630	3.744**	0.260	0.005	0.250	0.048	0.490	-0.128
0.750	0.061	0.400	-0.036	0.400	-0.022	0.580	-0.149
0.850	0.102	0.490	-0.047	0.490	0.035	0.650	0.024
0.900	0.210	0.580	-0.033	0.580	-0.045	0.750	0.284
0.960	0.085	0.640	0.174	0.650	0.030	0.830	0.410
		0.750	0.275	0.750	-0.006**	0.900	0.472
		0.870	0.329	0.890	0.420	0.960	0.307
		0.930	0.249	0.930	0.308		
		0.960	0.139	0.960	0.816		
CN =	0.561		0.707		0.847		0.818

Table G-2. Continued.

Flight 204, Wing sweep = 26°, Time = 9-33-24-000, MINF = 0.892, Camber = 5/6, ALPT = 8.25, BETA = -0.36, QINF = 269.2, RNPU = 2.1E+06, CNWP = 0.5367

η = 0.93		0.76		0.59		0.40	
			Upper Surface				
x/c	CP	*x/c*	CP	*x/c*	CP	*x/c*	CP
0.020	-0.029	0.000	0.893	0.000	0.995**	0.010	-0.688
0.060	-0.295	0.020	-0.244	0.020	-0.223	0.020	-0.643**
0.110	-0.453	0.040	-0.085	0.060	0.044**	0.060	-0.776**
0.200	-0.816	0.060	-0.447	0.090	-0.601	0.110	-0.932
0.230	-0.736	0.090	-0.536	0.110	-0.788	0.140	-1.078
0.400	-0.736	0.130	-0.591	0.130	-0.773	0.190	-1.797**
0.490	-0.663	0.150	-0.711	0.150	-0.941	0.250	-1.084
0.590	-0.642	0.200	-0.735	0.210	-0.905	0.400	-0.783
0.630	-0.573	0.250	-0.925	0.250	-0.889	0.490	-0.698
0.700	-0.620	0.260	-0.816	0.340	-0.954	0.580	-0.626
0.750	-0.335	0.280	-0.900	0.370	-0.955	0.650	-0.617
0.810	-0.345	0.290	-0.895	0.400	-0.930	0.700	-0.604
0.840	-0.376	0.310	-0.866	0.410	-0.942	0.750	-0.681
0.900	-0.248	0.320	-0.863	0.430	-0.980	0.800	-0.933
0.960	-0.208	0.340	-0.856	0.440	-0.943	0.830	-0.931
		0.350	-0.323**	0.460	-0.711	0.900	-0.426
		0.370	-0.857	0.490	-0.933	0.960	-0.387**
		0.380	-0.941	0.500	-0.978		
		0.400	-0.802	0.520	-0.934		
		0.410	-0.909	0.540	-0.958		
		0.430	-0.894	0.550	-0.952		
		0.440	-0.820	0.580	-0.958		
		0.460	-0.944	0.600	-0.938		
		0.470	-0.882	0.610	-0.937		
		0.490	-0.891	0.650	0.051**		
		0.500	-0.875	0.700	-1.014		
		0.520	-0.886	0.750	-0.717		
		0.530	-0.864	0.820	-0.181		
		0.550	-0.845	0.890	-0.368		
		0.560	-0.874	0.900	-0.373		
		0.580	-0.868	0.960	-0.298		
		0.590	-0.926				
		0.600	-0.934				
		0.640	-0.356				
		0.700	-0.348				
		0.750	0.062**				
		0.820	-0.249				
		0.870	-0.266				
		0.930	-0.284				
		0.960	-0.271				
			Lower Surface				
0.020	-0.329	0.020	-0.066	0.020	0.082	0.020	0.416
0.110	-0.104	0.060	0.136	0.060	0.246	0.060	0.027
0.230	0.101	0.090	0.053	0.090	0.187	0.110	0.114
0.400	-0.022	0.120	0.072**	0.120	-0.167	0.250	-0.001
0.490	-0.025	0.200	0.109	0.200	0.158	0.400	-0.071
0.630	5.529**	0.260	-0.028	0.250	0.030	0.490	-0.163
0.750	0.064	0.400	-0.035	0.400	-0.041	0.580	-0.184
0.850	0.121	0.490	-0.052	0.490	0.041	0.650	0.016
0.900	0.218	0.580	-0.049	0.580	-0.057	0.750	0.261
0.960	0.085	0.640	0.190	0.650	0.056	0.830	0.411
		0.750	0.267	0.750	0.008**	0.900	0.472
		0.870	0.331	0.890	0.386	0.960	0.302
		0.930	0.246	0.930	0.305		
		0.960	0.152	0.960	0.311		
CN =	0.552		0.672		0.811		0.791

Table G-2. Continued.

Flight 204, Wing sweep = 26°, Time = 9-35-23-500, MINF = 0.901, Camber = 5/6, ALPT = 9.27, BETA = -0.21, QINF = 275.9, RNPU = 2.1E+06, CNWP = 0.5518

η = 0.93		0.76		0.59		0.40	
			Upper Surface				
x/c	CP	*x/c*	CP	*x/c*	CP	*x/c*	CP
0.020	-0.086	0.000	0.899	0.000	0.873**	0.010	-0.672
0.060	-0.342	0.020	-0.426	0.020	-0.301	0.020	-0.741**
0.110	-0.477	0.040	-0.142	0.060	-0.030**	0.060	-0.826**
0.200	-0.874	0.060	-0.475	0.090	-0.654	0.110	-0.975
0.230	-0.761	0.090	-0.593	0.110	-0.825	0.140	-1.104
0.400	-0.749	0.130	-0.642	0.130	-0.803	0.190	-1.761**
0.490	-0.678	0.150	-0.757	0.150	-0.959	0.250	-1.112
0.590	-0.674	0.200	-0.771	0.210	-0.937	0.400	-0.817
0.630	-0.607	0.250	-0.946	0.250	-0.922	0.490	-0.724
0.700	-0.661	0.260	-0.856	0.340	-0.987	0.580	-0.668
0.750	-0.405	0.280	-0.920	0.370	-0.989	0.650	-0.647
0.810	-0.398	0.290	-0.929	0.400	-0.979	0.700	-0.634
0.840	-0.463	0.310	-0.896	0.410	-0.967	0.750	-0.699
0.900	-0.338	0.320	-0.890	0.430	-0.995	0.800	-0.979
0.960	-0.341	0.340	-0.888	0.440	-0.977	0.830	-0.961
		0.350	-0.332**	0.460	-0.747	0.900	-0.517
		0.370	-0.883	0.490	-0.909	0.960	-0.453**
		0.380	-0.966	0.500	-1.008		
		0.400	-0.841	0.520	-0.934		
		0.410	-0.935	0.540	-0.987		
		0.430	-0.921	0.550	-0.979		
		0.440	-0.853	0.580	-0.977		
		0.460	-0.982	0.600	-0.965		
		0.470	-0.905	0.610	-0.967		
		0.490	-0.918	0.650	0.032**		
		0.500	-0.912	0.700	-1.061		
		0.520	-0.938	0.750	-0.678		
		0.530	-0.900	0.820	-0.250		
		0.550	-0.907	0.890	-0.486		
		0.560	-0.916	0.900	-0.473		
		0.580	-0.899	0.960	-0.390		
		0.590	-0.961				
		0.600	-0.966				
		0.640	-0.363				
		0.700	-0.366				
		0.750	0.046**				
		0.820	-0.286				
		0.870	-0.314				
		0.930	-0.324				
		0.960	-0.319				
			Lower Surface				
0.020	-0.228	0.020	0.046	0.020	0.142	0.020	0.480
0.110	-0.088	0.060	0.188	0.060	0.288	0.060	0.004
0.230	0.109	0.090	0.093	0.090	0.225	0.110	0.122
0.400	-0.024	0.120	0.099**	0.120	-0.130	0.250	0.019
0.490	-0.055	0.200	0.119	0.200	0.161	0.400	-0.053
0.630	5.390**	0.260	-0.011	0.250	0.051	0.490	-0.142
0.750	0.040	0.400	-0.029	0.400	-0.036	0.580	-0.186
0.850	0.083	0.490	-0.061	0.490	0.025	0.650	0.009
0.900	0.175	0.580	-0.042	0.580	-0.059	0.750	0.263
0.960	0.011	0.640	0.171	0.650	0.032	0.830	0.401
		0.750	0.260	0.750	-0.007**	0.900	0.464
		0.870	0.316	0.890	0.393	0.960	0.288
		0.930	0.237	0.930	0.291		
		0.960	0.146	0.960	0.316		
CN =	0.579		0.714		0.851		0.831

Table G-2. Continued.

Flight 204, Wing sweep = 26°, Time = 9-35-34-500, MINF = 0.894, Camber = 5/6, ALPT = 12.19, BETA = 0.51, QINF = 292.8, RNPU = 2.2E+06, CNWP = 0.4976

η = 0.93		0.76		0.59		0.40	
			Upper Surface				
x/c	CP	*x/c*	CP	*x/c*	CP	*x/c*	CP
0.020	-0.649	0.000	0.865	0.000	0.875**	0.010	-0.944
0.060	-0.655	0.020	-0.897	0.020	-0.746	0.020	-1.002**
0.110	-0.834	0.040	-0.531	0.060	-0.075**	0.060	-1.047**
0.200	-0.994	0.060	-0.740	0.090	-0.895	0.110	-1.194
0.230	-0.885	0.090	-0.843	0.110	-1.053	0.140	-1.295
0.400	-0.907	0.130	-0.873	0.130	-1.041	0.190	-1.788**
0.490	-0.809	0.150	-0.970	0.150	-1.148	0.250	-1.335
0.590	-0.595	0.200	-0.984	0.210	-1.137	0.400	-1.030
0.630	-0.551	0.250	-1.128	0.250	-1.108	0.490	-0.910
0.700	-0.419	0.260	-1.021	0.340	-1.169	0.580	-0.791
0.750	-0.404	0.280	-1.091	0.370	-1.139	0.650	-0.747
0.810	-0.437	0.290	-1.082	0.400	-1.128	0.700	-0.684
0.840	-0.460	0.310	-1.049	0.410	-1.080	0.750	-0.650
0.900	-0.417	0.320	-1.029	0.430	-1.038	0.800	-0.720
0.960	-0.449	0.340	-0.967	0.440	-0.943	0.830	-0.625
		0.350	-0.242**	0.460	-0.617	0.900	-0.542
		0.370	-0.872	0.490	-0.671	0.960	-0.448**
		0.380	-0.857	0.500	-0.705		
		0.400	-0.645	0.520	-0.658		
		0.410	-0.644	0.540	-0.678		
		0.430	-0.614	0.550	-0.675		
		0.440	-0.561	0.580	-0.688		
		0.460	-0.639	0.600	-0.643		
		0.470	-0.588	0.610	-0.634		
		0.490	-0.584	0.650	-0.012**		
		0.500	-0.568	0.700	-0.603		
		0.520	-0.588	0.750	-0.682		
		0.530	-0.555	0.820	-0.299		
		0.550	-0.574	0.890	-0.546		
		0.560	-0.543	0.900	-0.522		
		0.580	-0.533	0.960	-0.451		
		0.590	-0.582				
		0.600	-0.552				
		0.640	-0.477				
		0.700	-0.509				
		0.750	0.044**				
		0.820	-0.478				
		0.870	-0.432				
		0.930	-0.447				
		0.960	-0.430				
			Lower Surface				
0.020	0.140	0.020	0.462	0.020	0.462	0.020	0.748
0.110	0.066	0.060	0.403	0.060	0.502	0.060	-0.066
0.230	0.188	0.090	0.295	0.090	0.420	0.110	0.340
0.400	0.041	0.120	0.271**	0.120	0.068	0.250	0.172
0.490	0.015	0.200	0.200	0.200	0.241	0.400	0.082
0.630	4.949**	0.260	0.127	0.250	0.207	0.490	-0.005
0.750	0.054	0.400	0.081	0.400	0.084	0.580	-0.050
0.850	0.083	0.490	0.024	0.490	0.021	0.650	0.088
0.900	0.163	0.580	0.020	0.580	0.006	0.750	0.321
0.960	-0.019	0.640	0.215	0.650	0.027	0.830	0.445
		0.750	0.288	0.750	-0.061**	0.900	0.494
		0.870	0.337	0.890	0.420	0.960	0.296
		0.930	0.255	0.930	0.303		
		0.960	0.143	0.960	0.272		
CN =	0.720		0.846		0.922		1.026

Table G-2. Continued.

Flight 198, Wing sweep = 26°, Time = 14-4-42-500, MINF = 0.898, Camber = 10/2, ALPT = 5.99, BETA = 0.05, QINF = 292.9, RNPU = 2.2E+06, CNWP = 0.3341

η = 0.93		0.76		0.59		0.40	
			Upper Surface				
x/c	CP	*x/c*	CP	*x/c*	CP	*x/c*	CP
0.020	0.570	0.000	0.311	0.000	-5.562**	0.010	0.322**
0.060	0.100	0.020	0.344**	0.020	0.569**	0.020	0.233**
0.110	-0.193	0.040	0.355	0.060	-0.832**	0.060	-0.333
0.200	-0.956	0.060	-0.006	0.090	-0.190	0.110	-0.619
0.230	-0.868	0.090	-0.185	0.110	-0.496	0.140	1.890**
0.400	-0.694	0.130	-0.433	0.130	-0.671	0.190	-5.427**
0.490	-0.570	0.150	-0.721	0.150	-0.833	0.250	-0.920
0.590	-0.519	0.200	-0.763	0.210	-0.880	0.400	-0.643
0.630	-0.204	0.250	-0.878	0.250	-0.824	0.490	-0.537
0.700	-0.071	0.260	-0.752	0.340	-0.851	0.580	-0.459
0.750	-0.115	0.280	-0.835	0.370	-0.831	0.650	-0.454
0.810	-0.165	0.290	-0.820	0.400	-0.872	0.700	-0.452
0.840	-0.109	0.310	-0.762	0.410	-0.800	0.750	-0.533
0.900	-0.056	0.320	-0.745	0.430	-0.848	0.800	-0.717
0.960	0.015	0.340	-0.783	0.440	-0.810	0.830	-0.678
		0.350	-0.396**	0.460	-0.823	0.900	-0.136
		0.370	-0.747	0.490	-0.731	0.960	-0.078
		0.380	-0.779	0.500	-0.853		
		0.400	-0.681	0.520	-0.810		
		0.410	-0.803	0.540	-0.822		
		0.430	-0.771	0.550	-0.786		
		0.440	-0.706	0.580	-0.719		
		0.460	-0.867	0.600	-0.633		
		0.470	-0.794	0.610	-0.507		
		0.490	-0.752	0.650	-2.637**		
		0.500	-0.735	0.700	-0.530		
		0.520	-0.744	0.750	-0.596		
		0.530	-0.729	0.820	-0.456		
		0.550	-0.758	0.890	-0.057		
		0.560	-0.756	0.900	-0.039		
		0.580	-0.732	0.960	0.005		
		0.590	-0.763				
		0.600	-0.833				
		0.640	-2.471**				
		0.700	-0.849				
		0.750	-0.207				
		0.820	-2.649**				
		0.870	-0.049				
		0.930	0.014				
		0.960	0.054				
			Lower Surface				
0.020	-0.948	0.020	-1.171	0.020	-1.265	0.020	-0.646
0.110	-0.602	0.060	-0.670	0.060	-0.290	0.060	3.473**
0.230	-0.063	0.090	-0.539	0.090	-0.183	0.110	-0.129
0.400	-0.004	0.120	-0.353	0.120	-0.453	0.250	-0.155
0.490	-0.061	0.200	-0.043	0.200	-0.162	0.400	-0.232
0.630	3.518**	0.260	-0.206	0.250	-0.136	0.490	-0.405
0.750	0.048	0.400	-2.667**	0.400	-0.269	0.580	-0.500
0.850	0.136	0.490	-0.132	0.490	-0.029	0.650	-0.225
0.900	0.166	0.580	-0.040	0.580	-0.195	0.750	0.110
0.960	0.146	0.640	0.296	0.650	0.033	0.830	0.252
		0.750	0.156	0.750	-0.008	0.900	0.343
		0.870	0.212	0.890	********	0.960	0.247
		0.930	0.227	0.930	0.239		
		0.960	0.171	0.960	-2.666**		
CN =	0.303		0.440		0.470		0.437

Table G-2. Continued.

Flight 198, Wing sweep = 26°, Time = 14-4-46-000, MINF = 0.898, Camber = 10/2, ALPT = 6.04, BETA = -0.16, QINF = 293.1, RNPU = 2.2E+06, CNWP = 0.3421

η = 0.93		0.76		0.59		0.40	
			Upper Surface				
x/c	CP	*x/c*	CP	*x/c*	CP	*x/c*	CP
0.020	0.570	0.000	0.315	0.000	-5.558**	0.010	0.322**
0.060	0.062	0.020	0.364**	0.020	0.569**	0.020	0.244**
0.110	-0.192	0.040	0.359	0.060	-0.838**	0.060	-0.333
0.200	-0.942	0.060	0.010	0.090	-0.206	0.110	-0.618
0.230	-0.839	0.090	-0.194	0.110	-0.496	0.140	1.901**
0.400	-0.709	0.130	-0.440	0.130	-0.683	0.190	-5.423**
0.490	-0.570	0.150	-0.717	0.150	-0.832	0.250	-0.919
0.590	-0.531	0.200	-0.762	0.210	-0.889	0.400	-0.636
0.630	-0.242	0.250	-0.878	0.250	-0.824	0.490	-0.541
0.700	-0.075	0.260	-0.765	0.340	-0.851	0.580	-0.480
0.750	-0.115	0.280	-0.835	0.370	-0.846	0.650	-0.462
0.810	-0.157	0.290	-0.829	0.400	-0.856	0.700	-0.463
0.840	-0.109	0.310	-0.764	0.410	-0.800	0.750	-0.525
0.900	-0.053	0.320	-0.749	0.430	-0.847	0.800	-0.724
0.960	0.008	0.340	-0.789	0.440	-0.820	0.830	-0.678
		0.350	-0.380**	0.460	-0.829	0.900	-0.146
		0.370	-0.750	0.490	-0.738	0.960	-0.086
		0.380	-0.769	0.500	-0.852		
		0.400	-0.691	0.520	-0.809		
		0.410	-0.802	0.540	-0.836		
		0.430	-0.782	0.550	-0.798		
		0.440	-0.696	0.580	-0.718		
		0.460	-0.866	0.600	-0.658		
		0.470	-0.774	0.610	-0.535		
		0.490	-0.755	0.650	-2.635**		
		0.500	-0.751	0.700	-0.551		
		0.520	-0.751	0.750	-0.610		
		0.530	-0.732	0.820	-0.447		
		0.550	-0.767	0.890	-0.061		
		0.560	-0.755	0.900	-0.039		
		0.580	-0.738	0.960	-0.006		
		0.590	-0.766				
		0.600	-0.823				
		0.640	-2.470**				
		0.700	-0.845				
		0.750	-0.203				
		0.820	-2.647**				
		0.870	-0.067				
		0.930	-0.013				
		0.960	0.021				
			Lower Surface				
0.020	-0.883	0.020	-1.111	0.020	-1.256	0.020	-0.639
0.110	-0.616	0.060	-0.730	0.060	-0.303	0.060	3.471**
0.230	-0.063	0.090	-0.535	0.090	-0.178	0.110	-0.129
0.400	-0.076	0.120	-0.337	0.120	-0.453	0.250	-0.155
0.490	-0.075	0.200	-0.043	0.200	-0.154	0.400	-0.232
0.630	3.515**	0.260	-0.176	0.250	-0.136	0.490	-0.405
0.750	0.044	0.400	-2.665**	0.400	-0.259	0.580	-0.510
0.850	0.136	0.490	-0.140	0.490	-0.028	0.650	-0.240
0.900	0.169	0.580	-0.055	0.580	-0.199	0.750	0.110
0.960	0.171	0.640	0.283	0.650	0.026	0.830	0.260
		0.750	0.156	0.750	-0.008	0.900	0.349
		0.870	0.221	0.890	********	0.960	0.253
		0.930	0.238	0.930	0.231		
		0.960	0.159	0.960	-2.664**		
CN =	0.292		0.442		0.475		0.439

Table G-2. Continued.

Flight 198, Wing sweep = 26°, Time = 14-5-4-500, MINF = 0.903, Camber = 10/2, ALPT = 6.92, BETA = 0.23, QINF = 294.5, RNPU = 2.2E+06, CNWP = 0.3829

η = 0.93		0.76		0.59		0.40	
			Upper Surface				
x/c	CP	*x/c*	CP	*x/c*	CP	*x/c*	CP
0.020	0.553	0.000	0.402	0.000	-5.521**	0.010	0.245**
0.060	0.082	0.020	0.313**	0.020	0.536**	0.020	0.199**
0.110	-0.193	0.040	0.330	0.060	-0.850**	0.060	-0.444
0.200	-0.969	0.060	-0.042	0.090	-0.233	0.110	-0.686
0.230	-0.862	0.090	-0.205	0.110	-0.502	0.140	1.902**
0.400	-0.718	0.130	-0.447	0.130	-0.695	0.190	-5.386**
0.490	-0.612	0.150	-0.723	0.150	-0.844	0.250	-0.948
0.590	-0.568	0.200	-0.771	0.210	-0.909	0.400	-0.651
0.630	-0.506	0.250	-0.890	0.250	-0.847	0.490	-0.630
0.700	-0.110	0.260	-0.779	0.340	-0.899	0.580	-0.522
0.750	-0.093	0.280	-0.857	0.370	-0.872	0.650	-0.497
0.810	-0.143	0.290	-0.856	0.400	-0.864	0.700	-0.483
0.840	-0.090	0.310	-0.804	0.410	-0.826	0.750	-0.580
0.900	-0.060	0.320	-0.775	0.430	-0.880	0.800	-0.747
0.960	-0.004	0.340	-0.826	0.440	-0.858	0.830	-0.708
		0.350	-0.405**	0.460	-0.872	0.900	-0.163
		0.370	-0.773	0.490	-0.806	0.960	-0.118
		0.380	-0.796	0.500	-0.887		
		0.400	-0.711	0.520	-0.848		
		0.410	-0.831	0.540	-0.879		
		0.430	-0.831	0.550	-0.862		
		0.440	-0.725	0.580	-0.821		
		0.460	-0.901	0.600	-0.834		
		0.470	-0.806	0.610	-0.736		
		0.490	-0.803	0.650	-2.612**		
		0.500	-0.786	0.700	-0.727		
		0.520	-0.792	0.750	-0.759		
		0.530	-0.764	0.820	-0.282		
		0.550	-0.798	0.890	-0.097		
		0.560	-0.792	0.900	-0.082		
		0.580	-0.772	0.960	-0.052		
		0.590	-0.796				
		0.600	-0.853				
		0.640	-2.448**				
		0.700	-0.294				
		0.750	-0.177				
		0.820	-2.624**				
		0.870	-0.171				
		0.930	-0.129				
		0.960	-0.119				
			Lower Surface				
0.020	-0.877	0.020	-1.182	0.020	-1.127	0.020	-0.405
0.110	-0.589	0.060	-0.479	0.060	-0.191	0.060	3.464**
0.230	-0.041	0.090	-0.328	0.090	-0.076	0.110	0.006
0.400	-0.046	0.120	-0.190	0.120	-0.385	0.250	-0.090
0.490	-0.095	0.200	-0.022	0.200	-0.137	0.400	-0.191
0.630	3.508**	0.260	-0.143	0.250	-0.073	0.490	-0.362
0.750	0.019	0.400	-2.642**	0.400	-0.211	0.580	-0.482
0.850	0.111	0.490	-0.145	0.490	-0.026	0.650	-0.290
0.900	0.150	0.580	-0.074	0.580	-0.199	0.750	0.129
0.960	0.151	0.640	0.266	0.650	0.017	0.830	0.278
		0.750	0.127	0.750	-0.002	0.900	0.357
		0.870	0.165	0.890	********	0.960	0.256
		0.930	0.177	0.930	0.232		
		0.960	0.075	0.960	-2.641**		
CN =	0.317		0.446		0.546		0.516

Table G-2. Continued.

Flight 198, Wing sweep = 26°, Time = 14-5-13-500, MINF = 0.902, Camber = 10/2, ALPT = 7.95, BETA = 0.57, QINF = 294.6, RNPU = 2.2E+06, CNWP = 0.4405

η = 0.93		0.76		0.59		0.40	
			Upper Surface				
x/c	CP	*x/c*	CP	*x/c*	CP	*x/c*	CP
0.020	0.492	0.000	0.514	0.000	-5.524**	0.010	0.111**
0.060	0.030	0.020	0.268**	0.020	0.441**	0.020	0.087**
0.110	-0.244	0.040	0.255	0.060	-0.874**	0.060	-0.519
0.200	-0.998	0.060	-0.095	0.090	-0.291	0.110	-0.791
0.230	-0.943	0.090	-0.267	0.110	-0.572	0.140	1.890**
0.400	-0.769	0.130	-0.511	0.130	-0.748	0.190	-5.389**
0.490	-0.680	0.150	-0.776	0.150	-0.899	0.250	-1.054
0.590	-0.637	0.200	-0.826	0.210	-0.956	0.400	-0.732
0.630	-0.556	0.250	-0.961	0.250	-0.910	0.490	-0.697
0.700	-0.168	0.260	-0.839	0.340	-0.967	0.580	-0.612
0.750	-0.145	0.280	-0.925	0.370	-0.925	0.650	-0.548
0.810	-0.197	0.290	-0.929	0.400	-0.950	0.700	-0.574
0.840	-0.141	0.310	-0.858	0.410	-0.905	0.750	-0.636
0.900	-0.113	0.320	-0.845	0.430	-0.978	0.800	-0.780
0.960	-0.053	0.340	-0.887	0.440	-0.926	0.830	-0.764
		0.350	-0.404**	0.460	-0.955	0.900	-0.224
		0.370	-0.848	0.490	-0.871	0.960	-0.173
		0.380	-0.878	0.500	-0.970		
		0.400	-0.782	0.520	-0.905		
		0.410	-0.898	0.540	-0.953		
		0.430	-0.893	0.550	-0.940		
		0.440	-0.805	0.580	-0.941		
		0.460	-0.978	0.600	-0.910		
		0.470	-0.884	0.610	-0.841		
		0.490	-0.863	0.650	-2.615**		
		0.500	-0.867	0.700	-0.954		
		0.520	-0.889	0.750	-0.954		
		0.530	-0.842	0.820	-0.333		
		0.550	-0.866	0.890	-0.204		
		0.560	-0.866	0.900	-0.230		
		0.580	-0.843	0.960	-0.189		
		0.590	-0.839				
		0.600	-0.724				
		0.640	-2.451**				
		0.700	-0.317				
		0.750	-0.218				
		0.820	-2.628**				
		0.870	-0.219				
		0.930	-0.216				
		0.960	-0.232				
			Lower Surface				
0.020	-0.753	0.020	-1.014	0.020	-0.638	0.020	-0.165
0.110	-0.423	0.060	-0.141	0.060	0.052	0.060	3.458**
0.230	-0.027	0.090	-0.141	0.090	0.042	0.110	0.042
0.400	-0.059	0.120	-0.037	0.120	-0.296	0.250	-0.031
0.490	-0.137	0.200	-0.012	0.200	-0.121	0.400	-0.121
0.630	3.502**	0.260	-0.074	0.250	-0.032	0.490	-0.299
0.750	-0.039	0.400	-2.646**	0.400	-0.149	0.580	-0.399
0.850	0.060	0.490	-0.153	0.490	-0.023	0.650	-0.169
0.900	0.121	0.580	-0.112	0.580	-0.241	0.750	0.134
0.960	0.100	0.640	0.245	0.650	-0.021	0.830	0.267
		0.750	0.118	0.750	-0.006	0.900	0.358
		0.870	0.179	0.890	********	0.960	0.245
		0.930	0.113	0.930	0.212		
		0.960	0.022	0.960	-2.644**		
CN =	0.367		0.526		0.665		0.635

Table G-2. Continued.

Flight 198, Wing sweep = 26°, Time = 14-5-20-500, MINF = 0.898, Camber = 10/2, ALPT = 7.99, BETA = 0.52, QINF = 293.8, RNPU = 2.2E+06, CNWP = 0.4551

η = 0.93		0.76		0.59		0.40	
			Upper Surface				
x/c	CP	*x/c*	CP	*x/c*	CP	*x/c*	CP
0.020	0.493	0.000	0.509	0.000	-5.549**	0.010	0.107**
0.060	0.002	0.020	0.255**	0.020	0.441**	0.020	0.104**
0.110	-0.216	0.040	0.261	0.060	-0.930**	0.060	-0.536
0.200	-1.008	0.060	-0.089	0.090	-0.264	0.110	-0.807
0.230	-0.901	0.090	-0.271	0.110	-0.592	0.140	1.908**
0.400	-0.773	0.130	-0.513	0.130	-0.757	0.190	-5.413**
0.490	-0.668	0.150	-0.780	0.150	-0.904	0.250	-1.073
0.590	-0.633	0.200	-0.822	0.210	-0.963	0.400	-0.729
0.630	-0.521	0.250	-0.985	0.250	-0.914	0.490	-0.688
0.700	-0.143	0.260	-0.842	0.340	-0.978	0.580	-0.608
0.750	-0.162	0.280	-0.937	0.370	-0.937	0.650	-0.566
0.810	-0.199	0.290	-0.935	0.400	-0.947	0.700	-0.580
0.840	-0.135	0.310	-0.860	0.410	-0.906	0.750	-0.632
0.900	-0.107	0.320	-0.850	0.430	-0.975	0.800	-0.783
0.960	-0.062	0.340	-0.890	0.440	-0.944	0.830	-0.769
		0.350	-0.410**	0.460	-0.961	0.900	-0.209
		0.370	-0.848	0.490	-0.830	0.960	-0.159
		0.380	-0.883	0.500	-0.976		
		0.400	-0.800	0.520	-0.937		
		0.410	-0.901	0.540	-0.979		
		0.430	-0.890	0.550	-0.937		
		0.440	-0.819	0.580	-0.920		
		0.460	-0.990	0.600	-0.940		
		0.470	-0.921	0.610	-0.851		
		0.490	-0.868	0.650	-2.632**		
		0.500	-0.874	0.700	-0.976		
		0.520	-0.862	0.750	-0.759		
		0.530	-0.849	0.820	-0.341		
		0.550	-0.871	0.890	-0.211		
		0.560	-0.869	0.900	-0.230		
		0.580	-0.840	0.960	-0.179		
		0.590	-0.809				
		0.600	-0.615				
		0.640	-2.467**				
		0.700	-0.286				
		0.750	-0.231				
		0.820	-2.645**				
		0.870	-0.254				
		0.930	-0.237				
		0.960	-0.207				
			Lower Surface				
0.020	-0.721	0.020	-1.010	0.020	-0.618	0.020	-0.170
0.110	-0.425	0.060	-0.146	0.060	0.058	0.060	3.459**
0.230	-0.017	0.090	-0.123	0.090	0.043	0.110	0.028
0.400	-0.064	0.120	-0.023	0.120	-0.299	0.250	-0.043
0.490	-0.124	0.200	-0.006	0.200	-0.130	0.400	-0.130
0.630	3.503**	0.260	-0.075	0.250	-0.011	0.490	-0.293
0.750	-0.030	0.400	-2.662**	0.400	-0.143	0.580	-0.419
0.850	0.070	0.490	-0.151	0.490	-0.032	0.650	-0.167
0.900	0.124	0.580	-0.118	0.580	-0.243	0.750	0.141
0.960	0.115	0.640	0.258	0.650	0.000	0.830	0.274
		0.750	0.101	0.750	-0.015	0.900	0.351
		0.870	0.157	0.890	********	0.960	0.252
		0.930	0.123	0.930	0.218		
		0.960	0.028	0.960	-2.661**		
CN =	0.364		0.521		0.664		0.633

Table G-2. Continued.

Flight 198, Wing sweep = 26°, Time = 14-5-35-500, MINF = 0.900, Camber = 10/2, ALPT = 9.05, BETA = 0.76, QINF = 297.3, RNPU = 2.3E+06, CNWP = 0.4444

η = 0.93		0.76		0.59		0.40	
			Upper Surface				
x/c	CP	*x/c*	CP	*x/c*	CP	*x/c*	CP
0.020	0.454	0.000	0.602	0.000	-5.498**	0.010	-0.023**
0.060	-0.050	0.020	0.139**	0.020	0.346**	0.020	0.028**
0.110	-0.294	0.040	0.173	0.060	-0.965**	0.060	-0.605
0.200	-1.023	0.060	-0.181	0.090	-0.409	0.110	-0.892
0.230	-0.947	0.090	-0.329	0.110	-0.640	0.140	1.879**
0.400	-0.810	0.130	-0.575	0.130	-0.797	0.190	-5.364**
0.490	-0.734	0.150	-0.812	0.150	-0.944	0.250	-1.140
0.590	-0.433	0.200	-0.863	0.210	-1.014	0.400	-0.811
0.630	-0.377	0.250	-1.027	0.250	-0.962	0.490	-0.728
0.700	-0.236	0.260	-0.881	0.340	-1.014	0.580	-0.675
0.750	-0.219	0.280	-0.966	0.370	-0.982	0.650	-0.600
0.810	-0.243	0.290	-0.978	0.400	-1.009	0.700	-0.648
0.840	-0.180	0.310	-0.911	0.410	-0.959	0.750	-0.673
0.900	-0.191	0.320	-0.893	0.430	-1.041	0.800	-0.825
0.960	-0.141	0.340	-0.943	0.440	-1.006	0.830	-0.804
		0.350	-0.405**	0.460	-1.019	0.900	-0.263
		0.370	-0.900	0.490	-0.946	0.960	-0.187
		0.380	-0.927	0.500	-1.048		
		0.400	-0.846	0.520	-1.011		
		0.410	-0.956	0.540	-1.016		
		0.430	-0.939	0.550	-1.001		
		0.440	-0.855	0.580	-1.016		
		0.460	-1.051	0.600	-0.997		
		0.470	-0.942	0.610	-0.912		
		0.490	-0.924	0.650	-2.616**		
		0.500	-0.929	0.700	-0.579		
		0.520	-0.929	0.750	-0.580		
		0.530	-0.697	0.820	-0.463		
		0.550	-0.521	0.890	-0.390		
		0.560	-0.413	0.900	-0.384		
		0.580	-0.391	0.960	-0.344		
		0.590	-0.395				
		0.600	-0.412				
		0.640	-2.453**				
		0.700	-0.331				
		0.750	-0.302				
		0.820	-2.628**				
		0.870	-0.295				
		0.930	-0.286				
		0.960	-0.276				
			Lower Surface				
0.020	-0.621	0.020	-0.574	0.020	-0.453	0.020	0.025
0.110	-0.171	0.060	0.016	0.060	0.189	0.060	3.403**
0.230	0.002	0.090	-0.001	0.090	0.133	0.110	0.130
0.400	-0.060	0.120	0.082	0.120	-0.209	0.250	0.017
0.490	-0.145	0.200	0.019	0.200	-0.087	0.400	-0.085
0.630	3.446**	0.260	-0.024	0.250	0.041	0.490	-0.245
0.750	-0.064	0.400	-2.646**	0.400	-0.101	0.580	-0.369
0.850	0.011	0.490	-0.139	0.490	-0.017	0.650	-0.120
0.900	0.065	0.580	-0.121	0.580	-0.233	0.750	0.144
0.960	0.038	0.640	0.242	0.650	-0.011	0.830	0.279
		0.750	0.122	0.750	-0.012	0.900	0.373
		0.870	0.131	0.890	********	0.960	0.248
		0.930	0.088	0.930	0.200		
		0.960	0.001	0.960	-2.645**		
CN =	0.408		0.557		0.712		0.733

Table G-2. Continued.

Flight 198, Wing sweep = 26°, Time = 14-5-41-000, MINF = 0.901, Camber = 10/2, ALPT = 10.08, BETA = 0.21, QINF = 301.9, RNPU = 2.3E+06, CNWP = 0.4682

η = 0.93		0.76		0.59		0.40	
			Upper Surface				
x/c	CP	*x/c*	CP	*x/c*	CP	*x/c*	CP
0.020	0.364	0.000	0.681	0.000	-5.435**	0.010	-0.080**
0.060	-0.100	0.020	0.069**	0.020	0.215**	0.020	-0.082**
0.110	-0.351	0.040	0.090	0.060	-0.962**	0.060	-0.695
0.200	-1.065	0.060	-0.260	0.090	-0.512	0.110	-0.947
0.230	-0.957	0.090	-0.403	0.110	-0.729	0.140	1.834**
0.400	-0.863	0.130	-0.615	0.130	-0.874	0.190	-5.303**
0.490	-0.504	0.150	-0.868	0.150	-1.018	0.250	-1.228
0.590	-0.382	0.200	-0.915	0.210	-1.064	0.400	-0.879
0.630	-0.365	0.250	-1.053	0.250	-1.018	0.490	-0.788
0.700	-0.286	0.260	-0.934	0.340	-1.081	0.580	-0.712
0.750	-0.301	0.280	-1.027	0.370	-1.051	0.650	-0.646
0.810	-0.323	0.290	-1.040	0.400	-1.057	0.700	-0.686
0.840	-0.272	0.310	-0.968	0.410	-1.027	0.750	-0.715
0.900	-0.265	0.320	-0.950	0.430	-1.092	0.800	-0.832
0.960	-0.285	0.340	-1.004	0.440	-1.048	0.830	-0.824
		0.350	-0.414**	0.460	-1.075	0.900	-0.273
		0.370	-0.960	0.490	-0.995	0.960	-0.152
		0.380	-0.981	0.500	-1.090		
		0.400	-0.881	0.520	-1.046		
		0.410	-1.014	0.540	-1.068		
		0.430	-0.989	0.550	-1.052		
		0.440	-0.905	0.580	-1.023		
		0.460	-1.074	0.600	-0.876		
		0.470	-0.830	0.610	-0.674		
		0.490	-0.658	0.650	-2.596**		
		0.500	-0.559	0.700	-0.522		
		0.520	-0.542	0.750	-0.623		
		0.530	-0.468	0.820	-0.535		
		0.550	-0.473	0.890	-0.465		
		0.560	-0.443	0.900	-0.454		
		0.580	-0.436	0.960	-0.438		
		0.590	-0.445				
		0.600	-0.464				
		0.640	-2.436**				
		0.700	-0.400				
		0.750	-0.338				
		0.820	-2.608**				
		0.870	-0.334				
		0.930	-0.345				
		0.960	-0.328				
			Lower Surface				
0.020	-0.734	0.020	-0.242	0.020	-0.078	0.020	0.242
0.110	-0.027	0.060	0.151	0.060	0.275	0.060	3.332**
0.230	0.027	0.090	0.091	0.090	0.195	0.110	0.163
0.400	-0.090	0.120	0.135	0.120	-0.159	0.250	0.072
0.490	-0.148	0.200	0.036	0.200	-0.057	0.400	-0.023
0.630	3.375**	0.260	0.030	0.250	0.086	0.490	-0.187
0.750	-0.094	0.400	-2.626**	0.400	-0.055	0.580	-0.328
0.850	-0.028	0.490	-0.119	0.490	-0.015	0.650	-0.116
0.900	0.027	0.580	-0.120	0.580	-0.213	0.750	0.141
0.960	-0.024	0.640	0.230	0.650	-0.013	0.830	0.292
		0.750	0.103	0.750	-0.006	0.900	0.362
		0.870	0.138	0.890	********	0.960	0.236
		0.930	0.081	0.930	0.181		
		0.960	-0.022	0.960	-2.624**		
CN =	0.429		0.606		0.766		0.805

Table G-2. Continued.

Flight 198, Wing sweep = 26°, Time = 14-5-53-500, MINF = 0.896, Camber = 10/2, ALPT = 11.04, BETA = 0.26, QINF = 307.8, RNPU = 2.3E+06, CNWP = 0.3301

η = 0.93		0.76		0.59		0.40	
			Upper Surface				
x/c	CP	*x/c*	CP	*x/c*	CP	*x/c*	CP
0.020	0.304	0.000	0.773	0.000	-5.386**	0.010	-0.262**
0.060	-0.133	0.020	-0.064**	0.020	0.125**	0.020	-0.162**
0.110	-0.446	0.040	0.030	0.060	-1.073**	0.060	-0.763
0.200	-1.075	0.060	-0.329	0.090	-0.604	0.110	-1.024
0.230	-1.010	0.090	-0.517	0.110	-0.811	0.140	-1.225**
0.400	-0.867	0.130	-0.681	0.130	-0.953	0.190	-5.257**
0.490	-0.465	0.150	-0.920	0.150	-1.062	0.250	-1.288
0.590	-0.400	0.200	-0.967	0.210	-1.125	0.400	-0.954
0.630	-0.383	0.250	-1.108	0.250	-1.096	0.490	-0.873
0.700	-0.340	0.260	-0.995	0.340	-1.149	0.580	-0.708
0.750	-0.331	0.280	-1.090	0.370	-1.099	0.650	-0.600
0.810	-0.349	0.290	-1.090	0.400	-1.021	0.700	-0.624
0.840	-0.295	0.310	-1.031	0.410	-0.747	0.750	-0.594
0.900	-0.300	0.320	-1.017	0.430	-0.710	0.800	-0.530
0.960	-0.272	0.340	-0.970	0.440	-0.643	0.830	-0.521
		0.350	-0.365**	0.460	-0.639	0.900	-0.383
		0.370	-0.651	0.490	-0.566	0.960	-0.276
		0.380	-0.626	0.500	-0.646		
		0.400	-0.535	0.520	-0.587		
		0.410	-0.612	0.540	-0.599		
		0.430	-0.600	0.550	-0.597		
		0.440	-0.519	0.580	-0.606		
		0.460	-0.657	0.600	-0.584		
		0.470	-0.547	0.610	-0.490		
		0.490	-0.536	0.650	-2.602**		
		0.500	-0.526	0.700	-0.511		
		0.520	-0.516	0.750	-0.589		
		0.530	-0.485	0.820	-0.512		
		0.550	-0.524	0.890	-0.470		
		0.560	-0.496	0.900	-0.459		
		0.580	-0.472	0.960	-0.464		
		0.590	-0.491				
		0.600	-0.520				
		0.640	-2.445**				
		0.700	-0.437				
		0.750	-0.376				
		0.820	-2.614**				
		0.870	-0.379				
		0.930	-0.384				
		0.960	-0.353				
			Lower Surface				
0.020	-0.462	0.020	-0.016	0.020	0.046	0.020	0.375
0.110	0.001	0.060	0.250	0.060	0.348	0.060	3.212**
0.230	0.053	0.090	0.165	0.090	0.267	0.110	0.231
0.400	-0.069	0.120	0.206	0.120	-0.110	0.250	0.109
0.490	-0.151	0.200	0.064	0.200	-0.049	0.400	0.007
0.630	3.254**	0.260	0.065	0.250	0.144	0.490	-0.160
0.750	-0.106	0.400	-2.631**	0.400	-0.023	0.580	-0.291
0.850	-0.045	0.490	-0.109	0.490	-0.021	0.650	-0.113
0.900	0.012	0.580	-0.124	0.580	-0.201	0.750	0.149
0.960	-0.034	0.640	0.223	0.650	-0.025	0.830	0.288
		0.750	0.084	0.750	-0.019	0.900	0.342
		0.870	0.146	0.890	********	0.960	0.213
		0.930	0.063	0.930	0.160		
		0.960	-0.024	0.960	-2.630**		
CN =	0.455		0.614		0.708		0.838

Table G-2. Continued.

Flight 211, Wing sweep = 26°, Time = 11-28-12-500, MINF = 0.899, Camber = 10/2, ALPT = 6.00, BETA = 0.05, QINF = 300.1, RNPU = 2.3E+06, CNWP = 0.3627

η = 0.93		0.76		0.59		0.40	
			Upper Surface				
x/c	CP	*x/c*	CP	*x/c*	CP	*x/c*	CP
0.020	0.530	0.000	0.307	0.000	0.387**	0.010	0.271
0.060	0.067	0.020	0.429	0.020	0.516	0.020	0.174
0.110	-0.248	0.040	0.397	0.060	1.604**	0.060	-0.392
0.200	-0.955	0.060	-0.024	0.090	-0.257	0.110	-0.672
0.230	-0.880	0.090	-0.226	0.110	-0.474	0.140	-0.994
0.400	-0.747	0.130	-0.452	0.130	-1.769**	0.190	-1.769**
0.490	-0.594	0.150	-0.726	0.150	-0.865	0.250	-0.960
0.590	-0.571	0.200	-0.771	0.210	-0.856	0.400	-0.705
0.630	-0.455	0.250	-0.870	0.250	-0.870	0.490	-0.594
0.700	-0.108	0.260	-0.824	0.340	-0.883	0.580	-0.488
0.750	-0.136	0.280	-0.862	0.370	-0.890	0.650	-0.513
0.810	-0.152	0.290	-0.835	0.400	-0.854	0.700	-0.495
0.840	-0.125	0.310	-0.808	0.410	0.650**	0.750	-0.559
0.900	-0.096	0.320	-0.815	0.430	-0.891	0.800	-0.742
0.960	-0.010	0.340	-0.812	0.440	-0.866	0.830	-0.689
		0.350	-0.409**	0.460	-0.870	0.900	-0.175
		0.370	-0.801	0.490	-0.811	0.960	-0.103
		0.380	-0.861	0.500	-0.902		
		0.400	-0.769	0.520	-0.876		
		0.410	-0.842	0.540	-0.877		
		0.430	-0.805	0.550	-0.852		
		0.440	-0.774	0.580	-0.844		
		0.460	-0.835	0.600	-0.805		
		0.470	-0.824	0.610	-0.738		
		0.490	-0.808	0.650	-0.800		
		0.500	-0.813	0.700	-0.681		
		0.520	-0.804	0.750	-0.674		
		0.530	-0.790	0.820	-0.359		
		0.550	-0.821	0.890	-0.093		
		0.560	-0.831	0.900	-0.073		
		0.580	-0.798	0.960	-0.006		
		0.590	-0.845				
		0.600	-0.841				
		0.640	-0.849				
		0.700	-0.413				
		0.750	-0.052**				
		0.820	-0.197				
		0.870	-0.172				
		0.930	-0.131				
		0.960	-0.102				
			Lower Surface				
0.020	-0.847	0.020	-1.233	0.020	-0.932	0.020	-0.521
0.110	-0.563	0.060	-0.576	0.060	-0.426	0.060	-0.051
0.230	-0.094	0.090	-0.472	0.090	-0.230	0.110	-0.192
0.400	-0.099	0.120	-0.229	0.120	-0.290	0.250	-0.171
0.490	-0.072	0.200	-0.087	0.200	-0.125	0.400	-0.259
0.630	4.024**	0.260	-0.176	0.250	-0.136	0.490	-0.375
0.750	0.008	0.400	-0.175	0.400	-0.272	0.580	-0.496
0.850	0.056	0.490	-0.172	0.490	-0.094	0.650	-0.281
0.900	0.156	0.580	-0.151	0.580	-0.239	0.750	0.077
0.960	0.146	0.640	0.016	0.650	-0.072	0.830	0.225
		0.750	0.118	0.750	-0.057	0.900	0.286
		0.870	0.198	0.890	0.253	0.960	0.211
		0.930	0.170	0.930	0.209		
		0.960	0.123	0.960	0.331		
CN =	0.318		0.427		0.496		0.458

Table G-2. Continued.

Flight 211, Wing sweep = 26°, Time = 11-29-4-500, MINF = 0.903, Camber = 10/2, ALPT = 8.06, BETA = -0.41, QINF = 297.1, RNPU = 2.3E+06, CNWP = 0.4635

η = 0.93		0.76		0.59		0.40	
			Upper Surface				
x/c	CP	*x/c*	CP	*x/c*	CP	*x/c*	CP
0.020	0.453	0.000	0.475	0.000	0.341**	0.010	0.027
0.060	-0.021	0.020	0.305	0.020	0.375	0.020	0.024
0.110	-0.232	0.040	0.281	0.060	1.375**	0.060	-0.495
0.200	-1.012	0.060	-0.127	0.090	-0.337	0.110	-0.831
0.230	-0.920	0.090	-0.317	0.110	-0.574	0.140	-1.088
0.400	-0.813	0.130	-0.529	0.130	-1.750**	0.190	-1.750**
0.490	-0.697	0.150	-0.788	0.150	-0.936	0.250	-1.106
0.590	-0.675	0.200	-0.835	0.210	-0.934	0.400	-0.804
0.630	-0.574	0.250	-0.949	0.250	-0.952	0.490	-0.680
0.700	-0.267	0.260	-0.895	0.340	-0.991	0.580	-0.613
0.750	-0.217	0.280	-0.934	0.370	-0.980	0.650	-0.625
0.810	-0.212	0.290	-0.917	0.400	-0.946	0.700	-0.613
0.840	-0.196	0.310	-0.900	0.410	0.693**	0.750	-0.654
0.900	-0.187	0.320	-0.907	0.430	-0.999	0.800	-0.807
0.960	-0.104	0.340	-0.910	0.440	-0.973	0.830	-0.772
		0.350	-0.423**	0.460	-0.985	0.900	-0.280
		0.370	-0.891	0.490	-0.874	0.960	-0.213
		0.380	-0.965	0.500	-1.010		
		0.400	-0.859	0.520	-0.997		
		0.410	-0.932	0.540	-0.989		
		0.430	-0.900	0.550	-0.978		
		0.440	-0.874	0.580	-0.987		
		0.460	-0.945	0.600	-0.965		
		0.470	-0.924	0.610	-0.943		
		0.490	-0.913	0.650	-1.093		
		0.500	-0.925	0.700	-1.004		
		0.520	-0.924	0.750	-0.656		
		0.530	-0.899	0.820	-0.424		
		0.550	-0.924	0.890	-0.298		
		0.560	-0.920	0.900	-0.324		
		0.580	-0.846	0.960	-0.230		
		0.590	-0.642				
		0.600	-0.536				
		0.640	-0.325				
		0.700	-0.330				
		0.750	-0.061**				
		0.820	-0.292				
		0.870	-0.289				
		0.930	-0.282				
		0.960	-0.274				
			Lower Surface				
0.020	-0.686	0.020	-0.691	0.020	-0.605	0.020	-0.120
0.110	-0.368	0.060	-0.159	0.060	0.057	0.060	-0.045
0.230	-0.054	0.090	-0.071	0.090	0.037	0.110	0.037
0.400	-0.087	0.120	-0.012	0.120	-0.114	0.250	-0.061
0.490	-0.153	0.200	-0.052	0.200	-0.086	0.400	-0.160
0.630	4.101**	0.260	-0.070	0.250	-0.042	0.490	-0.282
0.750	-0.086	0.400	-0.136	0.400	-0.178	0.580	-0.404
0.850	-0.026	0.490	-0.179	0.490	-0.096	0.650	-0.225
0.900	0.088	0.580	-0.208	0.580	-0.265	0.750	0.094
0.960	0.062	0.640	-0.016	0.650	-0.080	0.830	0.242
		0.750	0.100	0.750	-0.051	0.900	0.289
		0.870	0.132	0.890	0.247	0.960	0.196
		0.930	0.090	0.930	0.180		
		0.960	0.013	0.960	0.264		
CN =	0.380		0.503		0.680		0.640

Table G-2. Continued.

Flight 211, Wing sweep = 26°, Time = 11-29-11-000, MINF = 0.907, Camber = 10/2, ALPT = 8.96, BETA = 0.37, QINF = 301.9, RNPU = 2.3E+06, CNWP = 0.4647

η = 0.93		0.76		0.59		0.40	
			Upper Surface				
x/c	CP	*x/c*	CP	*x/c*	CP	*x/c*	CP
0.020	0.433	0.000	0.542	0.000	0.435**	0.010	-0.016
0.060	-0.042	0.020	0.270	0.020	0.302	0.020	-0.015
0.110	-0.412	0.040	0.232	0.060	1.318**	0.060	-0.603
0.200	-1.003	0.060	-0.183	0.090	-0.437	0.110	-0.888
0.230	-0.921	0.090	-0.350	0.110	-0.589	0.140	-1.154
0.400	-0.845	0.130	-0.550	0.130	-1.735**	0.190	-1.735**
0.490	-0.730	0.150	-0.812	0.150	-0.943	0.250	-1.171
0.590	-0.699	0.200	-0.842	0.210	-0.944	0.400	-0.872
0.630	-0.588	0.250	-0.978	0.250	-0.985	0.490	-0.714
0.700	-0.444	0.260	-0.920	0.340	-1.033	0.580	-0.656
0.750	-0.272	0.280	-0.966	0.370	-1.038	0.650	-0.677
0.810	-0.249	0.290	-0.957	0.400	-0.972	0.700	-0.657
0.840	-0.227	0.310	-0.932	0.410	0.670**	0.750	-0.691
0.900	-0.251	0.320	-0.940	0.430	-1.033	0.800	-0.827
0.960	-0.185	0.340	-0.949	0.440	-0.995	0.830	-0.790
		0.350	-0.423**	0.460	-1.020	0.900	-0.359
		0.370	-0.929	0.490	-0.924	0.960	-0.269
		0.380	-0.998	0.500	-1.043		
		0.400	-0.890	0.520	-1.027		
		0.410	-0.953	0.540	-1.026		
		0.430	-0.932	0.550	-1.011		
		0.440	-0.923	0.580	-1.036		
		0.460	-0.975	0.600	-0.995		
		0.470	-0.960	0.610	-0.987		
		0.490	-0.949	0.650	-0.888		
		0.500	-0.960	0.700	-0.676		
		0.520	-0.936	0.750	-0.614		
		0.530	-0.924	0.820	-0.512		
		0.550	-0.966	0.890	-0.421		
		0.560	-0.795	0.900	-0.447		
		0.580	-0.587	0.960	-0.364		
		0.590	-0.511				
		0.600	-0.466				
		0.640	-0.368				
		0.700	-0.373				
		0.750	-0.083**				
		0.820	-0.325				
		0.870	-0.343				
		0.930	-0.341				
		0.960	-0.337				
			Lower Surface				
0.020	-0.635	0.020	-0.497	0.020	-0.453	0.020	0.035
0.110	-0.223	0.060	-0.038	0.060	0.129	0.060	-0.056
0.230	-0.050	0.090	-0.018	0.090	0.104	0.110	0.085
0.400	-0.104	0.120	0.056	0.120	-0.058	0.250	-0.026
0.490	-0.136	0.200	-0.030	0.200	-0.076	0.400	-0.126
0.630	4.025**	0.260	-0.030	0.250	-0.010	0.490	-0.252
0.750	-0.127	0.400	-0.127	0.400	-0.133	0.580	-0.375
0.850	-0.087	0.490	-0.180	0.490	-0.106	0.650	-0.248
0.900	0.037	0.580	-0.209	0.580	-0.345	0.750	0.090
0.960	-0.009	0.640	-0.031	0.650	-0.091	0.830	0.235
		0.750	0.102	0.750	-0.062	0.900	0.285
		0.870	0.133	0.890	0.239	0.960	0.201
		0.930	0.070	0.930	0.173		
		0.960	-0.010	0.960	0.213		
CN =	0.429		0.544		0.707		0.708

Table G-2. Continued.

Flight 226, Wing sweep = 26°, Time = 9-38-4-500, MINF = 0.906, Camber = 10/2, ALPT = 5.96, BETA = 0.19, QINF = 295.9, RNPU = 2.2E+06, CNWP = 0.3462

η = 0.93		0.76		0.59		0.40	
			Upper Surface				
x/c	CP	*x/c*	CP	*x/c*	CP	*x/c*	CP
0.020	0.521	0.000	0.286	0.000	8.526**	0.010	0.352
0.060	0.098	0.020	0.369	0.020	0.540	0.020	0.253
0.110	-0.236	0.040	0.338	0.060	-2.886**	0.060	-0.236
0.200	-0.887	0.060	-0.032	0.090	-0.184	0.110	-0.591
0.230	-0.797	0.090	-0.176	0.110	-0.461	0.140	-0.926
0.400	-0.720	0.130	-0.414	0.130	-0.641	0.190	-1.742**
0.490	-0.577	0.150	-0.731	0.150	-0.869	0.250	-0.896
0.590	-0.572	0.200	-0.773	0.210	-0.811	0.400	-0.681
0.630	-0.470	0.250	-0.826	0.250	-0.795	0.490	-0.587
0.700	-0.164	0.260	-0.775	0.340	-0.827	0.580	-0.481
0.750	-0.130	0.280	-0.826	0.370	-0.831	0.650	-0.477
0.810	-0.112	0.290	-0.803	0.400	-0.837	0.700	-0.478
0.840	-0.105	0.310	-0.792	0.410	-2.751**	0.750	-0.546
0.900	-0.090	0.320	-0.759	0.430	-0.850	0.800	-0.741
0.960	0.010	0.340	-0.778	0.440	-0.792	0.830	-0.661
		0.350	-0.455**	0.460	-0.824	0.900	-0.201
		0.370	-0.754	0.490	-0.731	0.960	-0.129
		0.380	-0.821	0.500	-0.847		
		0.400	-0.710	0.520	-0.826		
		0.410	-0.807	0.540	-0.830		
		0.430	-0.766	0.550	-0.773		
		0.440	-0.701	0.580	-0.784		
		0.460	-0.831	0.600	-0.755		
		0.470	-0.772	0.610	-0.703		
		0.490	-0.763	0.650	7.137**		
		0.500	-0.783	0.700	-0.688		
		0.520	-0.785	0.750	-0.685		
		0.530	-0.756	0.820	-0.483		
		0.550	-0.823	0.890	-0.103		
		0.560	-0.769	0.900	-0.092		
		0.580	-0.770	0.960	-0.017		
		0.590	-0.836				
		0.600	-0.831				
		0.640	-0.816				
		0.700	-0.446				
		0.750	-0.050**				
		0.820	-0.189				
		0.870	-0.164				
		0.930	-0.130				
		0.960	-0.119				
			Lower Surface				
0.020	-0.903	0.020	-0.233	0.020	-1.174	0.020	-0.588
0.110	-0.636	0.060	-0.631	0.060	-0.256	0.060	6.844**
0.230	-0.107	0.090	-0.481	0.090	3.915**	0.110	-0.059
0.400	-0.071	0.120	-0.315	0.120	-0.361	0.250	-0.155
0.490	-0.044	0.200	-0.093	0.200	-0.148	0.400	-0.242
0.630	4.685**	0.260	-0.238	0.250	-0.131	0.490	-0.388
0.750	0.008	0.400	-0.193	0.400	-0.284	0.580	-0.481
0.850	0.111	0.490	-0.178	0.490	-0.089	0.650	-0.565
0.900	0.167	0.580	-0.138	0.580	-0.420	0.750	0.003
0.960	0.165	0.640	0.031	0.650	-0.074	0.830	0.229
		0.750	0.153	0.750	0.092	0.900	0.294
		0.870	0.193	0.890	0.204	0.960	0.215
		0.930	0.165	0.930	0.185		
		0.960	0.121	0.960	-2.840**		
CN =	0.298		0.401		0.463		0.412

Table G-2. Continued.

Flight 226, Wing sweep = 26°, Time = 9-38-25-500, MINF = 0.907, Camber = 10/2, ALPT = 7.09, BETA = 0.25, QINF = 295.8, RNPU = 2.2E+06, CNWP = 0.3933

η = 0.93		0.76		0.59		0.40	
			Upper Surface				
x/c	CP	*x/c*	CP	*x/c*	CP	*x/c*	CP
0.020	0.480	0.000	0.369	0.000	8.536**	0.010	0.236
0.060	0.117	0.020	0.302	0.020	0.474	0.020	0.233
0.110	-0.047	0.040	0.273	0.060	-2.881**	0.060	-0.394
0.200	-0.923	0.060	-0.104	0.090	-0.220	0.110	-0.680
0.230	-0.854	0.090	-0.229	0.110	-0.517	0.140	-0.991
0.400	-0.738	0.130	-0.463	0.130	-0.686	0.190	-1.737**
0.490	-0.639	0.150	-0.759	0.150	-0.964	0.250	-0.963
0.590	-0.636	0.200	-0.811	0.210	-0.858	0.400	-0.718
0.630	-0.554	0.250	-0.888	0.250	-0.841	0.490	-0.649
0.700	-0.338	0.260	-0.827	0.340	-0.883	0.580	-0.544
0.750	-0.167	0.280	-0.874	0.370	-0.882	0.650	-0.544
0.810	-0.165	0.290	-0.857	0.400	-0.907	0.700	-0.535
0.840	-0.122	0.310	-0.850	0.410	-2.747**	0.750	-0.600
0.900	-0.125	0.320	-0.841	0.430	-0.906	0.800	-0.764
0.960	-0.042	0.340	-0.814	0.440	-0.865	0.830	-0.707
		0.350	-0.486**	0.460	-0.895	0.900	-0.232
		0.370	-0.797	0.490	-0.818	0.960	-0.188
		0.380	-0.878	0.500	-0.923		
		0.400	-0.709	0.520	-0.872		
		0.410	-0.866	0.540	-0.893		
		0.430	-0.834	0.550	-0.858		
		0.440	-0.785	0.580	-0.838		
		0.460	-0.889	0.600	-0.847		
		0.470	-0.828	0.610	-0.835		
		0.490	-0.837	0.650	7.146**		
		0.500	-0.848	0.700	-0.880		
		0.520	-0.858	0.750	-0.885		
		0.530	-0.820	0.820	-0.343		
		0.550	-0.869	0.890	-0.190		
		0.560	-0.836	0.900	-0.172		
		0.580	-0.841	0.960	-0.119		
		0.590	-0.884				
		0.600	-0.901				
		0.640	-0.401				
		0.700	-0.311				
		0.750	-0.067**				
		0.820	-0.203				
		0.870	-0.218				
		0.930	-0.236				
		0.960	-0.225				
			Lower Surface				
0.020	-0.958	0.020	-0.229	0.020	-0.853	0.020	-0.358
0.110	-0.488	0.060	-0.492	0.060	-0.146	0.060	6.853**
0.230	-0.090	0.090	-0.361	0.090	3.922**	0.110	-0.027
0.400	-0.073	0.120	-0.155	0.120	-0.278	0.250	-0.105
0.490	-0.106	0.200	-0.091	0.200	-0.144	0.400	-0.185
0.630	4.693**	0.260	-0.145	0.250	-0.081	0.490	-0.353
0.750	-0.025	0.400	-0.188	0.400	-0.243	0.580	-0.471
0.850	0.059	0.490	-0.207	0.490	-0.076	0.650	-0.514
0.900	0.133	0.580	-0.179	0.580	-0.408	0.750	0.051
0.960	0.118	0.640	0.002	0.650	-0.083	0.830	0.254
		0.750	0.136	0.750	0.067	0.900	0.300
		0.870	0.136	0.890	0.225	0.960	0.209
		0.930	0.096	0.930	0.165		
		0.960	0.041	0.960	-2.835**		
CN =	0.329		0.424		0.554		0.503

Table G-2. Continued.

Flight 226, Wing sweep = 26°, Time = 9-38-41-500, MINF = 0.894, Camber = 10/2, ALPT = 12.06, BETA = 0.19, QINF = 297.7, RNPU = 2.3E+06, CNWP = 0.2948

η = 0.93		0.76		0.59		0.40	
			Upper Surface				
x/c	CP	*x/c*	CP	*x/c*	CP	*x/c*	CP
0.020	0.146	0.000	0.803	0.000	8.419**	0.010	-0.551
0.060	-0.277	0.020	-0.182	0.020	-0.061	0.020	-0.427
0.110	-0.601	0.040	-0.083	0.060	-2.924**	0.060	-0.778
0.200	-1.043	0.060	-0.496	0.090	-0.703	0.110	-1.077
0.230	-1.058	0.090	-0.631	0.110	-0.892	0.140	-1.204
0.400	-0.572	0.130	-0.801	0.130	-1.001	0.190	-1.787**
0.490	-0.525	0.150	-1.029	0.150	-1.181	0.250	-1.314
0.590	-0.533	0.200	-1.061	0.210	-1.123	0.400	-0.938
0.630	-0.459	0.250	-1.149	0.250	-1.113	0.490	-0.840
0.700	-0.429	0.260	-1.046	0.340	-0.802	0.580	-0.779
0.750	-0.485	0.280	-1.013	0.370	-0.759	0.650	-0.716
0.810	-0.438	0.290	-0.864	0.400	-0.791	0.700	-0.705
0.840	-0.394	0.310	-0.728	0.410	-2.791**	0.750	-0.670
0.900	-0.401	0.320	-0.701	0.430	-0.750	0.800	-0.612
0.960	-0.407	0.340	-0.665	0.440	-0.700	0.830	-0.616
		0.350	-0.368**	0.460	-0.719	0.900	-0.525
		0.370	-0.627	0.490	-0.639	0.960	-0.442
		0.380	-0.701	0.500	-0.724		
		0.400	-0.591	0.520	-0.683		
		0.410	-0.671	0.540	-0.682		
		0.430	-0.640	0.550	-0.665		
		0.440	-0.584	0.580	-0.660		
		0.460	-0.654	0.600	-0.646		
		0.470	-0.593	0.610	-0.612		
		0.490	-0.599	0.650	7.038**		
		0.500	-0.621	0.700	-0.620		
		0.520	-0.596	0.750	-0.687		
		0.530	-0.561	0.820	-0.547		
		0.550	-0.612	0.890	-0.530		
		0.560	-0.554	0.900	-0.515		
		0.580	-0.566	0.960	-0.441		
		0.590	-0.623				
		0.600	-0.579				
		0.640	-0.478				
		0.700	-0.487				
		0.750	-0.056**				
		0.820	-0.430				
		0.870	-0.441				
		0.930	-0.452				
		0.960	-0.417				
			Lower Surface				
0.020	-0.078	0.020	-0.182	0.020	0.217	0.020	0.473
0.110	0.017	0.060	0.267	0.060	0.372	0.060	6.747**
0.230	0.039	0.090	0.177	0.090	3.836**	0.110	0.374
0.400	-0.051	0.120	0.243	0.120	0.023	0.250	0.141
0.490	-0.091	0.200	0.037	0.200	-0.021	0.400	0.028
0.630	4.601**	0.260	0.095	0.250	0.162	0.490	-0.104
0.750	-0.131	0.400	-0.006	0.400	-0.009	0.580	-0.232
0.850	-0.079	0.490	-0.100	0.490	-0.091	0.650	-0.099
0.900	-0.007	0.580	-0.156	0.580	-0.157	0.750	0.112
0.960	-0.108	0.640	0.016	0.650	-0.083	0.830	0.315
		0.750	0.132	0.750	0.080	0.900	0.303
		0.870	0.159	0.890	0.200	0.960	0.173
		0.930	0.058	0.930	0.133		
		0.960	-0.019	0.960	-2.878**		
CN =	0.495		0.654		0.745		0.932

Table G-2. Continued.

Flight 211, Wing sweep = 26°, Time = 11-25-20-500, MINF = 0.898, Camber = 5/10, ALPT = 4.04, BETA = 0.14, QINF = 299.5, RNPU = 2.3E+06, CNWP = 0.3072

η = 0.93		0.76		0.59		0.40	
			Upper Surface				
x/c	CP	*x/c*	CP	*x/c*	CP	*x/c*	CP
0.020	0.362	0.000	0.578	0.000	0.552**	0.010	-0.053
0.060	0.022	0.020	0.232	0.020	0.292	0.020	-0.014
0.110	-0.229	0.040	0.241	0.060	1.513**	0.060	-0.383
0.200	-0.749	0.060	-0.071	0.090	-0.237	0.110	-0.545
0.230	-0.629	0.090	-0.208	0.110	-0.399	0.140	-0.770
0.400	-0.496	0.130	-0.357	0.130	-1.772**	0.190	-1.772**
0.490	-0.219	0.150	-0.551	0.150	-0.643	0.250	-0.593
0.590	-0.176	0.200	-0.549	0.210	-0.660	0.400	-0.620
0.630	-0.230	0.250	-0.664	0.250	-0.674	0.490	-0.358
0.700	-0.282	0.260	-0.625	0.340	-0.703	0.580	-0.343
0.750	-0.829	0.280	-0.650	0.370	-0.696	0.650	-0.392
0.810	-0.789	0.290	-0.641	0.400	-0.670	0.700	-0.377
0.840	-0.840	0.310	-0.616	0.410	0.652**	0.750	-0.479
0.900	-0.317	0.320	-0.622	0.430	-0.651	0.800	-1.020
0.960	-0.321	0.340	-0.620	0.440	-0.600	0.830	-0.915
		0.350	-0.337**	0.460	-0.581	0.900	-0.443
		0.370	-0.607	0.490	-0.503	0.960	-0.430
		0.380	-0.668	0.500	-0.474		
		0.400	-0.575	0.520	-0.375		
		0.410	-0.639	0.540	-0.331		
		0.430	-0.602	0.550	-0.308		
		0.440	-0.571	0.580	-0.272		
		0.460	-0.628	0.600	-0.295		
		0.470	-0.581	0.610	-0.304		
		0.490	-0.613	0.650	-0.582		
		0.500	-0.632	0.700	-0.487		
		0.520	-0.605	0.750	-0.527		
		0.530	-0.605	0.820	-0.836		
		0.550	-0.647	0.890	-0.448		
		0.560	-0.635	0.900	-0.456		
		0.580	-0.508	0.960	-0.412		
		0.590	-0.461				
		0.600	-0.423				
		0.640	-0.414				
		0.700	-0.351				
		0.750	-0.029**				
		0.820	-0.551				
		0.870	-0.375				
		0.930	-0.330				
		0.960	-0.340				
			Lower Surface				
0.020	-1.295	0.020	-1.127	0.020	-0.997	0.020	-0.203
0.110	-0.321	0.060	-0.825	0.060	-0.253	0.060	-0.021
0.230	-0.083	0.090	-0.460	0.090	-0.256	0.110	-0.222
0.400	-0.020	0.120	-0.170	0.120	-0.406	0.250	-0.272
0.490	0.010	0.200	-0.082	0.200	-0.121	0.400	-0.323
0.630	4.033**	0.260	-0.146	0.250	-0.295	0.490	-0.293
0.750	0.162	0.400	-0.073	0.400	-0.152	0.580	-0.146
0.850	0.206	0.490	-0.031	0.490	-0.049	0.650	0.085
0.900	0.290	0.580	0.029	0.580	-0.013	0.750	0.308
0.960	0.102	0.640	0.269	0.650	-0.048	0.830	0.409
		0.750	0.331	0.750	-0.023	0.900	0.479
		0.870	0.386	0.890	0.421	0.960	0.337
		0.930	0.325	0.930	0.351		
		0.960	0.206	0.960	0.350		
CN =	0.414		0.464		0.456		0.489

Table G-2. Continued.

Flight 211, Wing sweep = 26°, Time = 11-25-28-000, MINF = 0.900, Camber = 5/11, ALPT = 5.00, BETA = -0.36, QINF = 300.8, RNPU = 2.3E+06, CNWP = 0.3527

η = 0.93		0.76		0.59		0.40	
			Upper Surface				
x/c	CP	*x/c*	CP	*x/c*	CP	*x/c*	CP
0.020	0.329	0.000	0.625	0.000	0.521**	0.010	-0.179
0.060	-0.007	0.020	0.193	0.020	0.211	0.020	-0.098
0.110	-0.275	0.040	0.188	0.060	1.506**	0.060	-0.466
0.200	-0.772	0.060	-0.133	0.090	-0.289	0.110	-0.621
0.230	-0.627	0.090	-0.242	0.110	-0.443	0.140	-0.838
0.400	-0.547	0.130	-0.392	0.130	-1.765**	0.190	-1.765**
0.490	-0.431	0.150	-0.582	0.150	-0.683	0.250	-0.759
0.590	-0.421	0.200	-0.581	0.210	-0.695	0.400	-0.638
0.630	-0.340	0.250	-0.699	0.250	-0.715	0.490	-0.432
0.700	-0.417	0.260	-0.664	0.340	-0.746	0.580	-0.394
0.750	-0.846	0.280	-0.691	0.370	-0.756	0.650	-0.432
0.810	-0.822	0.290	-0.682	0.400	-0.727	0.700	-0.417
0.840	-0.852	0.310	-0.658	0.410	0.649**	0.750	-0.499
0.900	-0.339	0.320	-0.664	0.430	-0.739	0.800	-1.030
0.960	-0.341	0.340	-0.665	0.440	-0.721	0.830	-0.975
		0.350	-0.325**	0.460	-0.728	0.900	-0.468
		0.370	-0.660	0.490	-0.614	0.960	-0.453
		0.380	-0.706	0.500	-0.645		
		0.400	-0.628	0.520	-0.642		
		0.410	-0.685	0.540	-0.614		
		0.430	-0.646	0.550	-0.588		
		0.440	-0.627	0.580	-0.480		
		0.460	-0.697	0.600	-0.414		
		0.470	-0.689	0.610	-0.384		
		0.490	-0.670	0.650	-0.568		
		0.500	-0.673	0.700	-0.489		
		0.520	-0.665	0.750	-0.540		
		0.530	-0.653	0.820	-0.779		
		0.550	-0.690	0.890	-0.439		
		0.560	-0.688	0.900	-0.450		
		0.580	-0.660	0.960	-0.403		
		0.590	-0.707				
		0.600	-0.711				
		0.640	-0.738				
		0.700	-0.624				
		0.750	-0.022**				
		0.820	-0.403				
		0.870	-0.294				
		0.930	-0.292				
		0.960	-0.313				
			Lower Surface				
0.020	-1.241	0.020	-1.067	0.020	-0.884	0.020	-0.082
0.110	-0.122	0.060	-0.339	0.060	-0.096	0.060	-0.021
0.230	-0.056	0.090	-0.203	0.090	-0.167	0.110	-0.161
0.400	-0.036	0.120	-0.148	0.120	-0.337	0.250	-0.239
0.490	0.010	0.200	-0.053	0.200	-0.105	0.400	-0.279
0.630	4.015**	0.260	-0.132	0.250	-0.193	0.490	-0.248
0.750	0.165	0.400	-0.062	0.400	-0.123	0.580	-0.136
0.850	0.208	0.490	-0.020	0.490	-0.042	0.650	0.092
0.900	0.294	0.580	0.040	0.580	-0.006	0.750	0.315
0.960	0.118	0.640	0.268	0.650	-0.042	0.830	0.419
		0.750	0.329	0.750	-0.027	0.900	0.489
		0.870	0.383	0.890	0.459	0.960	0.340
		0.930	0.316	0.930	0.386		
		0.960	0.204	0.960	0.384		
CN =	0.513		0.563		0.541		0.570

Table G-2. Continued.

Flight 211, Wing sweep = 26°, Time = 11-25-34-500, MINF = 0.897, Camber = 5/10, ALPT = 6.01, BETA = 0.19, QINF = 298.2, RNPU = 2.3E+06, CNWP = 0.4057

η = 0.93		0.76		0.59		0.40	
			Upper Surface				
x/c	CP	*x/c*	CP	*x/c*	CP	*x/c*	CP
0.020	0.286	0.000	0.736	0.000	0.558**	0.010	-0.345
0.060	-0.055	0.020	0.084	0.020	0.103	0.020	-0.200
0.110	-0.294	0.040	0.119	0.060	1.373**	0.060	-0.557
0.200	-0.763	0.060	-0.209	0.090	-0.357	0.110	-0.742
0.230	-0.666	0.090	-0.307	0.110	-0.490	0.140	-0.917
0.400	-0.628	0.130	-0.443	0.130	-1.777**	0.190	-1.777**
0.490	-0.491	0.150	-0.632	0.150	-0.753	0.250	-0.904
0.590	-0.496	0.200	-0.631	0.210	-0.739	0.400	-0.697
0.630	-0.418	0.250	-0.764	0.250	-0.769	0.490	-0.575
0.700	-0.482	0.260	-0.713	0.340	-0.825	0.580	-0.443
0.750	-0.495	0.280	-0.749	0.370	-0.824	0.650	-0.514
0.810	-0.515	0.290	-0.731	0.400	-0.797	0.700	-0.501
0.840	-0.536	0.310	-0.716	0.410	0.657**	0.750	-0.581
0.900	-0.354	0.320	-0.719	0.430	-0.833	0.800	-1.071
0.960	-0.365	0.340	-0.735	0.440	-0.803	0.830	-0.700
		0.350	-0.352**	0.460	-0.817	0.900	-0.478
		0.370	-0.725	0.490	-0.776	0.960	-0.470
		0.380	-0.801	0.500	-0.850		
		0.400	-0.708	0.520	-0.833		
		0.410	-0.776	0.540	-0.820		
		0.430	-0.715	0.550	-0.810		
		0.440	-0.700	0.580	-0.766		
		0.460	-0.762	0.600	-0.678		
		0.470	-0.762	0.610	-0.628		
		0.490	-0.752	0.650	-0.711		
		0.500	-0.764	0.700	-0.630		
		0.520	-0.730	0.750	-0.642		
		0.530	-0.741	0.820	-0.524		
		0.550	-0.775	0.890	-0.412		
		0.560	-0.751	0.900	-0.445		
		0.580	-0.743	0.960	-0.400		
		0.590	-0.791				
		0.600	-0.779				
		0.640	-0.821				
		0.700	-0.850				
		0.750	-0.004**				
		0.820	-0.298				
		0.870	-0.315				
		0.930	-0.332				
		0.960	-0.331				
			Lower Surface				
0.020	-0.804	0.020	-0.841	0.020	-0.608	0.020	0.090
0.110	-0.173	0.060	-0.022	0.060	-0.002	0.060	-0.018
0.230	-0.008	0.090	-0.114	0.090	-0.043	0.110	-0.023
0.400	-0.029	0.120	-0.080	0.120	-0.227	0.250	-0.172
0.490	0.005	0.200	-0.010	0.200	-0.044	0.400	-0.191
0.630	4.054**	0.260	-0.078	0.250	-0.118	0.490	-0.179
0.750	0.157	0.400	-0.056	0.400	-0.101	0.580	-0.124
0.850	0.197	0.490	-0.025	0.490	-0.020	0.650	0.126
0.900	0.267	0.580	0.028	0.580	-0.010	0.750	0.331
0.960	0.084	0.640	0.280	0.650	-0.039	0.830	0.453
		0.750	0.326	0.750	-0.024	0.900	0.496
		0.870	0.390	0.890	0.488	0.960	0.341
		0.930	0.329	0.930	0.408		
		0.960	0.228	0.960	0.371		
CN =	0.502		0.659		0.642		0.684

Table G-2. Continued.

Flight 211, Wing sweep = 26°, Time = 11-25-39-500, MINF = 0.898, Camber = 5/10, ALPT = 7.09, BETA = -0.21, QINF = 299.0, RNPU = 2.3E+06, CNWP = 0.4689

η = 0.93		0.76		0.59		0.40	
			Upper Surface				
x/c	CP	*x/c*	CP	*x/c*	CP	*x/c*	CP
0.020	0.165	0.000	0.784	0.000	0.563**	0.010	-0.603
0.060	-0.112	0.020	-0.016	0.020	-0.026	0.020	-0.395
0.110	-0.305	0.040	0.019	0.060	1.227**	0.060	-0.640
0.200	-0.784	0.060	-0.287	0.090	-0.482	0.110	-0.804
0.230	-0.687	0.090	-0.361	0.110	-0.574	0.140	-0.969
0.400	-0.672	0.130	-0.498	0.130	-1.773**	0.190	-1.773**
0.490	-0.552	0.150	-0.669	0.150	-0.788	0.250	-0.973
0.590	-0.557	0.200	-0.675	0.210	-0.793	0.400	-0.730
0.630	-0.487	0.250	-0.813	0.250	-0.833	0.490	-0.634
0.700	-0.546	0.260	-0.773	0.340	-0.869	0.580	-0.515
0.750	-0.498	0.280	-0.813	0.370	-0.892	0.650	-0.560
0.810	-0.511	0.290	-0.800	0.400	-0.884	0.700	-0.537
0.840	-0.565	0.310	-0.770	0.410	0.655**	0.750	-0.616
0.900	-0.419	0.320	-0.784	0.430	-0.892	0.800	-0.970
0.960	-0.439	0.340	-0.788	0.440	-0.863	0.830	-0.653
		0.350	-0.336**	0.460	-0.871	0.900	-0.490
		0.370	-0.775	0.490	-0.827	0.960	-0.478
		0.380	-0.844	0.500	-0.905		
		0.400	-0.758	0.520	-0.899		
		0.410	-0.824	0.540	-0.901		
		0.430	-0.783	0.550	-0.876		
		0.440	-0.748	0.580	-0.861		
		0.460	-0.815	0.600	-0.857		
		0.470	-0.819	0.610	-0.842		
		0.490	-0.799	0.650	-0.831		
		0.500	-0.813	0.700	-0.750		
		0.520	-0.791	0.750	-0.766		
		0.530	-0.785	0.820	-0.494		
		0.550	-0.804	0.890	-0.420		
		0.560	-0.824	0.900	-0.435		
		0.580	-0.793	0.960	-0.417		
		0.590	-0.828				
		0.600	-0.836				
		0.640	-0.854				
		0.700	-0.906				
		0.750	-0.005**				
		0.820	-0.343				
		0.870	-0.344				
		0.930	-0.358				
		0.960	-0.357				
			Lower Surface				
0.020	-0.785	0.020	-0.249	0.020	-0.138	0.020	0.216
0.110	-0.173	0.060	0.064	0.060	0.091	0.060	-0.004
0.230	0.021	0.090	-0.047	0.090	0.031	0.110	0.038
0.400	-0.011	0.120	-0.022	0.120	-0.167	0.250	-0.105
0.490	0.012	0.200	0.022	0.200	-0.014	0.400	-0.140
0.630	4.041**	0.260	-0.050	0.250	-0.052	0.490	-0.157
0.750	0.145	0.400	-0.019	0.400	-0.052	0.580	-0.090
0.850	0.184	0.490	-0.018	0.490	-0.017	0.650	0.117
0.900	0.275	0.580	0.046	0.580	0.011	0.750	0.354
0.960	0.073	0.640	0.279	0.650	-0.025	0.830	0.460
		0.750	0.348	0.750	-0.010	0.900	0.521
		0.870	0.431	0.890	0.490	0.960	0.348
		0.930	0.339	0.930	0.398		
		0.960	0.215	0.960	0.376		
CN =	0.547		0.736		0.735		0.757

Table G-2. Continued.

Flight 211, Wing sweep = 26°, Time = 11-25-44-500, MINF = 0.894, Camber = 5/10, ALPT = 8.16, BETA = -0.01, QINF = 297.7, RNPU = 2.3E+06, CNWP = 0.5649

η = 0.93		0.76		0.59		0.40	
			Upper Surface				
x/c	CP	*x/c*	CP	*x/c*	CP	*x/c*	CP
0.020	0.053	0.000	0.850	0.000	0.475**	0.010	-0.702
0.060	-0.245	0.020	-0.122	0.020	-0.178	0.020	-0.619
0.110	-0.417	0.040	-0.082	0.060	1.116**	0.060	-0.718
0.200	-0.832	0.060	-0.404	0.090	-0.616	0.110	-0.913
0.230	-0.756	0.090	-0.501	0.110	-0.687	0.140	-1.069
0.400	-0.735	0.130	-0.590	0.130	-1.787**	0.190	-1.787**
0.490	-0.616	0.150	-0.733	0.150	-0.858	0.250	-1.054
0.590	-0.604	0.200	-0.736	0.210	-0.887	0.400	-0.801
0.630	-0.553	0.250	-0.887	0.250	-0.908	0.490	-0.700
0.700	-0.626	0.260	-0.836	0.340	-0.939	0.580	-0.604
0.750	-0.578	0.280	-0.882	0.370	-0.951	0.650	-0.640
0.810	-0.573	0.290	-0.869	0.400	-0.932	0.700	-0.604
0.840	-0.648	0.310	-0.838	0.410	0.652**	0.750	-0.676
0.900	-0.485	0.320	-0.855	0.430	-0.978	0.800	-1.057
0.960	-0.493	0.340	-0.859	0.440	-0.952	0.830	-0.684
		0.350	-0.334**	0.460	-0.949	0.900	-0.574
		0.370	-0.847	0.490	-0.905	0.960	-0.545
		0.380	-0.913	0.500	-0.976		
		0.400	-0.829	0.520	-0.971		
		0.410	-0.890	0.540	-0.979		
		0.430	-0.848	0.550	-0.951		
		0.440	-0.825	0.580	-0.935		
		0.460	-0.905	0.600	-0.949		
		0.470	-0.885	0.610	-0.932		
		0.490	-0.865	0.650	-1.071		
		0.500	-0.879	0.700	-0.978		
		0.520	-0.864	0.750	-1.011		
		0.530	-0.869	0.820	-0.483		
		0.550	-0.905	0.890	-0.458		
		0.560	-0.887	0.900	-0.460		
		0.580	-0.855	0.960	-0.399		
		0.590	-0.908				
		0.600	-0.900				
		0.640	-0.915				
		0.700	-0.504				
		0.750	-0.008**				
		0.820	-0.343				
		0.870	-0.363				
		0.930	-0.381				
		0.960	-0.372				
			Lower Surface				
0.020	-0.419	0.020	-0.104	0.020	0.027	0.020	0.345
0.110	-0.110	0.060	0.153	0.060	0.166	0.060	0.005
0.230	0.064	0.090	0.044	0.090	0.115	0.110	0.138
0.400	-0.010	0.120	0.045	0.120	-0.073	0.250	-0.037
0.490	0.021	0.200	0.060	0.200	0.032	0.400	-0.096
0.630	4.053**	0.260	0.002	0.250	0.008	0.490	-0.126
0.750	0.142	0.400	-0.010	0.400	-0.008	0.580	-0.061
0.850	0.175	0.490	0.014	0.490	-0.016	0.650	0.119
0.900	0.274	0.580	0.055	0.580	0.027	0.750	0.364
0.960	0.050	0.640	0.285	0.650	-0.016	0.830	0.456
		0.750	0.358	0.750	-0.016	0.900	0.517
		0.870	0.413	0.890	0.501	0.960	0.352
		0.930	0.338	0.930	0.402		
		0.960	0.214	0.960	0.390		
CN =	0.631		0.774		0.852		0.867

Table G-2. Continued.

Flight 211, Wing sweep = 26°, Time = 11-26-1-500, MINF = 0.889, Camber = 5/11, ALPT = 10.22, BETA = 0.54, QINF = 311.0, RNPU = 2.4E+06, CNWP = 0.5362

η = 0.93		0.76		0.59		0.40	
			Upper Surface				
x/c	CP	*x/c*	CP	*x/c*	CP	*x/c*	CP
0.020	-0.165	0.000	0.873	0.000	0.479**	0.010	-0.812
0.060	-0.425	0.020	-0.510	0.020	-0.518	0.020	-0.822
0.110	-0.594	0.040	-0.260	0.060	1.059**	0.060	-0.898
0.200	-0.914	0.060	-0.575	0.090	-0.776	0.110	-1.058
0.230	-0.858	0.090	-0.689	0.110	-0.884	0.140	-1.190
0.400	-0.843	0.130	-0.788	0.130	-1.806**	0.190	-1.806**
0.490	-0.743	0.150	-0.902	0.150	-1.001	0.250	-1.224
0.590	-0.736	0.200	-0.896	0.210	-1.014	0.400	-0.937
0.630	-0.680	0.250	-1.015	0.250	-1.045	0.490	-0.810
0.700	-0.735	0.260	-0.966	0.340	-1.097	0.580	-0.733
0.750	-0.499	0.280	-1.014	0.370	-1.094	0.650	-0.759
0.810	-0.548	0.290	-1.014	0.400	-1.050	0.700	-0.737
0.840	-0.601	0.310	-0.984	0.410	0.528**	0.750	-0.740
0.900	-0.527	0.320	-0.990	0.430	-1.104	0.800	-0.799
0.960	-0.540	0.340	-1.009	0.440	-1.080	0.830	-0.979
		0.350	-0.345**	0.460	-1.089	0.900	-0.576
		0.370	-0.982	0.490	-1.007	0.960	-0.543
		0.380	-1.059	0.500	-1.108		
		0.400	-0.962	0.520	-1.093		
		0.410	-1.020	0.540	-1.090		
		0.430	-0.988	0.550	-1.073		
		0.440	-0.954	0.580	-1.056		
		0.460	-1.036	0.600	-1.081		
		0.470	-0.988	0.610	-1.070		
		0.490	-0.996	0.650	-0.784		
		0.500	-1.013	0.700	-0.655		
		0.520	-0.994	0.750	-0.642		
		0.530	-0.993	0.820	-0.565		
		0.550	-1.028	0.890	-0.575		
		0.560	-1.032	0.900	-0.562		
		0.580	-0.995	0.960	-0.503		
		0.590	-1.045				
		0.600	-0.895				
		0.640	-0.441				
		0.700	-0.457				
		0.750	0.005**				
		0.820	-0.407				
		0.870	-0.416				
		0.930	-0.420				
		0.960	-0.411				
			Lower Surface				
0.020	-0.046	0.020	0.235	0.020	0.271	0.020	0.550
0.110	-0.013	0.060	0.293	0.060	0.340	0.060	-0.019
0.230	0.129	0.090	0.184	0.090	0.254	0.110	0.269
0.400	0.017	0.120	0.147	0.120	0.045	0.250	0.063
0.490	0.036	0.200	0.129	0.200	0.096	0.400	0.001
0.630	3.784**	0.260	0.080	0.250	0.104	0.490	-0.030
0.750	0.131	0.400	0.057	0.400	0.054	0.580	0.000
0.850	0.154	0.490	0.051	0.490	-0.025	0.650	0.169
0.900	0.248	0.580	0.077	0.580	0.059	0.750	0.394
0.960	0.041	0.640	0.300	0.650	-0.018	0.830	0.490
		0.750	0.342	0.750	-0.039	0.900	0.541
		0.870	0.413	0.890	0.501	0.960	0.351
		0.930	0.336	0.930	0.397		
		0.960	0.206	0.960	0.368		
CN =	0.738		0.892		0.941		1.039

Table G-2. Continued.

Flight 211, Wing sweep = 26°, Time = 11-26-8-000, MINF = 0.895, Camber = 5/10, ALPT = 9.92, BETA = 0.37, QINF = 332.3, RNPU = 2.5E+06, CNWP = 0.5767

η = 0.93		0.76		0.59		0.40	
			Upper Surface				
x/c	CP	*x/c*	CP	*x/c*	CP	*x/c*	CP
0.020	-0.088	0.000	0.896	0.000	0.461**	0.010	-0.606
0.060	-0.373	0.020	-0.438	0.020	-0.359	0.020	-0.795
0.110	-0.550	0.040	-0.193	0.060	0.853**	0.060	-0.904
0.200	-0.886	0.060	-0.536	0.090	-0.729	0.110	-1.033
0.230	-0.828	0.090	-0.646	0.110	-0.844	0.140	-1.142
0.400	-0.814	0.130	-0.745	0.130	-1.783**	0.190	-1.783**
0.490	-0.718	0.150	-0.851	0.150	-0.970	0.250	-1.170
0.590	-0.714	0.200	-0.854	0.210	-0.983	0.400	-0.902
0.630	-0.648	0.250	-0.976	0.250	-1.007	0.490	-0.767
0.700	-0.713	0.260	-0.930	0.340	-1.066	0.580	-0.697
0.750	-0.552	0.280	-0.982	0.370	-1.056	0.650	-0.722
0.810	-0.554	0.290	-0.974	0.400	-1.022	0.700	-0.705
0.840	-0.595	0.310	-0.947	0.410	0.402**	0.750	-0.711
0.900	-0.543	0.320	-0.943	0.430	-1.059	0.800	-0.827
0.960	-0.582	0.340	-0.969	0.440	-1.054	0.830	-1.004
		0.350	-0.358**	0.460	-1.060	0.900	-0.613
		0.370	-0.934	0.490	-1.002	0.960	-0.574
		0.380	-1.017	0.500	-1.071		
		0.400	-0.916	0.520	-1.079		
		0.410	-0.986	0.540	-1.058		
		0.430	-0.947	0.550	-1.041		
		0.440	-0.921	0.580	-1.032		
		0.460	-1.006	0.600	-1.061		
		0.470	-0.991	0.610	-1.027		
		0.490	-0.965	0.650	-1.156		
		0.500	-0.979	0.700	-1.062		
		0.520	-0.962	0.750	-0.706		
		0.530	-0.961	0.820	-0.576		
		0.550	-0.996	0.890	-0.565		
		0.560	-0.991	0.900	-0.576		
		0.580	-0.957	0.960	-0.518		
		0.590	-1.011				
		0.600	-0.992				
		0.640	-0.539				
		0.700	-0.473				
		0.750	-0.014**				
		0.820	-0.420				
		0.870	-0.422				
		0.930	-0.412				
		0.960	-0.423				
			Lower Surface				
0.020	-0.122	0.020	0.201	0.020	0.228	0.020	0.541
0.110	-0.049	0.060	0.282	0.060	0.307	0.060	-0.030
0.230	0.099	0.090	0.161	0.090	0.225	0.110	0.282
0.400	0.001	0.120	0.132	0.120	0.038	0.250	0.034
0.490	0.018	0.200	0.102	0.200	0.083	0.400	-0.014
0.630	3.450**	0.260	0.066	0.250	0.089	0.490	-0.060
0.750	0.138	0.400	0.035	0.400	0.026	0.580	-0.026
0.850	0.147	0.490	0.030	0.490	-0.029	0.650	0.160
0.900	0.246	0.580	0.060	0.580	0.043	0.750	0.395
0.960	0.040	0.640	0.290	0.650	-0.029	0.830	0.479
		0.750	0.345	0.750	-0.129	0.900	0.535
		0.870	0.403	0.890	0.499	0.960	0.345
		0.930	0.335	0.930	0.393		
		0.960	0.194	0.960	0.388		
CN =	0.708		0.866		0.941		1.005

Table G-2. Continued.

Flight 226, Wing sweep = 26°, Time = 10-11-10-000, MINF = 0.906, Camber = 5/10, ALPT = 5.05, BETA = -0.24, QINF = 303.6, RNPU = 2.3E+06, CNWP = 0.3583

η = 0.93		0.76		0.59		0.40	
			Upper Surface				
x/c	CP	*x/c*	CP	*x/c*	CP	*x/c*	CP
0.020	0.295	0.000	0.621	0.000	3.468**	0.010	-0.138
0.060	0.013	0.020	0.000	0.020	0.217	0.020	-0.058
0.110	-0.238	0.040	0.116	0.060	-4.649**	0.060	-0.433
0.200	-0.663	0.060	-0.200	0.090	-0.237	0.110	-0.566
0.230	-0.699	0.090	-0.219	0.110	-0.444	0.140	-0.786
0.400	-0.524	0.130	-0.389	0.130	-0.478	0.190	-1.742**
0.490	-0.454	0.150	-0.585	0.150	-0.725	0.250	-0.734
0.590	-0.467	0.200	-0.584	0.210	-0.614	0.400	-0.599
0.630	-0.334	0.250	-0.653	0.250	-0.631	0.490	-0.395
0.700	-0.410	0.260	-0.612	0.340	-0.658	0.580	-0.399
0.750	-0.681	0.280	-0.615	0.370	-0.695	0.650	-0.396
0.810	-0.611	0.290	-0.615	0.400	-0.736	0.700	-0.385
0.840	-0.618	0.310	-0.654	0.410	-2.726**	0.750	-0.481
0.900	-0.334	0.320	-0.632	0.430	-0.651	0.800	-0.947
0.960	-0.333	0.340	-0.587	0.440	-0.611	0.830	-0.881
		0.350	-0.399**	0.460	-0.668	0.900	-0.434
		0.370	-0.604	0.490	-0.579	0.960	-0.425
		0.380	-0.636	0.500	-0.616		
		0.400	-0.577	0.520	-0.512		
		0.410	-0.630	0.540	-0.523		
		0.430	-0.591	0.550	-0.543		
		0.440	-0.533	0.580	-0.502		
		0.460	-0.663	0.600	-0.409		
		0.470	-0.603	0.610	-0.377		
		0.490	-0.649	0.650	2.114**		
		0.500	-0.674	0.700	-0.544		
		0.520	-0.697	0.750	-0.609		
		0.530	-0.645	0.820	-0.770		
		0.550	-0.707	0.890	-0.410		
		0.560	-0.601	0.900	-0.437		
		0.580	-0.670	0.960	-0.367		
		0.590	-0.700				
		0.600	-0.737				
		0.640	-0.732				
		0.700	-0.681				
		0.750	-0.034**				
		0.820	-0.445				
		0.870	-0.307				
		0.930	-0.305				
		0.960	-0.294				
			Lower Surface				
0.020	-1.253	0.020	-1.046	0.020	-0.838	0.020	-0.073
0.110	-0.150	0.060	-0.515	0.060	-0.093	0.060	1.828**
0.230	-0.071	0.090	-0.236	0.090	1.137**	0.110	-0.128
0.400	-0.029	0.120	-0.141	0.120	-0.460	0.250	-0.213
0.490	-0.013	0.200	-0.057	0.200	-0.150	0.400	-0.256
0.630	1.887**	0.260	-0.160	0.250	-0.228	0.490	-0.349
0.750	0.148	0.400	-0.081	0.400	-0.120	0.580	-0.143
0.850	0.244	0.490	-0.054	0.490	-0.036	0.650	0.105
0.900	0.300	0.580	0.035	0.580	0.022	0.750	0.267
0.960	0.122	0.640	0.249	0.650	-0.042	0.830	0.461
		0.750	0.343	0.750	0.338	0.900	0.497
		0.870	0.408	0.890	0.385	0.960	0.343
		0.930	0.283	0.930	0.308		
		0.960	0.172	0.960	-2.812**		
CN =	0.470		0.545		0.524		0.531

Table G-2. Continued.

Flight 226, Wing sweep = 26°, Time = 10-11-33-500, MINF = 0.897, Camber = 5/10, ALPT = 7.08, BETA = -0.27, QINF = 295.4, RNPU = 2.2E+06, CNWP = 0.4828

η = 0.93		0.76		0.59		0.40	
			Upper Surface				
x/c	CP	*x/c*	CP	*x/c*	CP	*x/c*	CP
0.020	0.148	0.000	0.779	0.000	3.580**	0.010	-0.556
0.060	-0.114	0.020	-0.181	0.020	-0.028	0.020	-0.283
0.110	-0.342	0.040	-0.054	0.060	-4.762**	0.060	-0.594
0.200	-0.676	0.060	-0.332	0.090	-0.445	0.110	-0.765
0.230	-0.631	0.090	-0.349	0.110	-0.573	0.140	-0.936
0.400	-0.645	0.130	-0.508	0.130	-0.596	0.190	-1.775**
0.490	-0.566	0.150	-0.700	0.150	-0.859	0.250	-0.923
0.590	-0.605	0.200	-0.688	0.210	-0.729	0.400	-0.699
0.630	-0.464	0.250	-0.769	0.250	-0.765	0.490	-0.614
0.700	-0.505	0.260	-0.744	0.340	-0.767	0.580	-0.521
0.750	-0.510	0.280	-0.740	0.370	-0.755	0.650	-0.494
0.810	-0.546	0.290	-0.736	0.400	-0.868	0.700	-0.491
0.840	-0.544	0.310	-0.786	0.410	-2.786**	0.750	-0.604
0.900	-0.404	0.320	-0.764	0.430	-0.791	0.800	-0.971
0.960	-0.437	0.340	-0.705	0.440	-0.748	0.830	-0.634
		0.350	-0.415**	0.460	-0.790	0.900	-0.451
		0.370	-0.735	0.490	-0.771	0.960	-0.453
		0.380	-0.768	0.500	-0.841		
		0.400	-0.699	0.520	-0.766		
		0.410	-0.762	0.540	-0.798		
		0.430	-0.721	0.550	-0.828		
		0.440	-0.712	0.580	-0.819		
		0.460	-0.799	0.600	-0.738		
		0.470	-0.707	0.610	-0.739		
		0.490	-0.791	0.650	2.189**		
		0.500	-0.822	0.700	-0.762		
		0.520	-0.795	0.750	-0.808		
		0.530	-0.772	0.820	-0.455		
		0.550	-0.833	0.890	-0.379		
		0.560	-0.718	0.900	-0.434		
		0.580	-0.793	0.960	-0.360		
		0.590	-0.839				
		0.600	-0.857				
		0.640	-0.841				
		0.700	-0.809				
		0.750	0.003**				
		0.820	-0.289				
		0.870	-0.311				
		0.930	-0.316				
		0.960	-0.326				
			Lower Surface				
0.020	-0.612	0.020	-0.241	0.020	-0.119	0.020	0.222
0.110	-0.157	0.060	-0.010	0.060	0.102	0.060	1.895**
0.230	0.023	0.090	-0.063	0.090	1.185**	0.110	0.049
0.400	-0.010	0.120	-0.018	0.120	-0.309	0.250	-0.083
0.490	-0.020	0.200	0.020	0.200	-0.055	0.400	-0.108
0.630	1.956**	0.260	-0.075	0.250	-0.026	0.490	-0.169
0.750	0.144	0.400	-0.021	0.400	-0.047	0.580	-0.101
0.850	0.239	0.490	-0.017	0.490	0.002	0.650	0.131
0.900	0.307	0.580	0.056	0.580	0.046	0.750	0.300
0.960	0.098	0.640	0.265	0.650	-0.020	0.830	0.494
		0.750	0.367	0.750	0.371	0.900	0.536
		0.870	0.426	0.890	0.412	0.960	0.360
		0.930	0.303	0.930	0.348		
		0.960	0.197	0.960	-2.874**		
CN =	0.536		0.702		0.716		0.733

Table G-2. Continued.

Flight 201, Wing sweep = 26°, Time = 9-30-23-000, MINF = 0.893, Camber = 5/10, ALPT = 4.09, BETA = 0.57, QINF = 291.1, RNPU = 2.2E+06, CNWP = 0.4156

η = 0.93		0.76		0.59		0.40	
			Upper Surface				
x/c	CP	*x/c*	CP	*x/c*	CP	*x/c*	CP
0.020	0.365	0.000	0.599	0.000	0.977**	0.010	-0.021
0.060	0.008	0.020	0.195	0.020	0.294	0.020	-0.002**
0.110	-0.237	0.040	0.259	0.060	0.691**	0.060	-0.367**
0.200	-0.737	0.060	-0.087	0.090	-0.199	0.110	-0.512
0.230	-0.613	0.090	-0.194	0.110	-0.423	0.140	-0.795
0.400	-0.418	0.130	-0.340	0.130	-0.504	0.190	-1.791**
0.490	-0.085	0.150	-0.551	0.150	-0.671	0.250	-0.562
0.590	-0.179	0.200	-0.574	0.210	-0.640	0.400	-0.568
0.630	-0.230	0.250	-0.675	0.250	-0.637	0.490	-0.344
0.700	-0.303	0.260	-0.616	0.340	-0.682	0.580	-0.319
0.750	-0.847	0.280	-0.634	0.370	-0.690	0.650	-0.370
0.810	-0.800	0.290	-0.619	0.400	-0.663	0.700	-0.339
0.840	-0.838	0.310	-0.609	0.410	-0.634	0.750	-0.459
0.900	-0.287	0.320	-0.602	0.430	-0.590	0.800	-1.015
0.960	-0.296	0.340	-0.597	0.440	-0.541	0.830	-0.729
		0.350	-0.318**	0.460	-0.284	0.900	-0.394
		0.370	-0.598	0.490	-0.312	0.960	-0.391**
		0.380	-0.657	0.500	-0.304		
		0.400	-0.569	0.520	-0.250		
		0.410	-0.630	0.540	-0.292		
		0.430	-0.597	0.550	-0.270		
		0.440	-0.554	0.580	-0.245		
		0.460	-0.648	0.600	-0.279		
		0.470	-0.604	0.610	-0.279		
		0.490	-0.605	0.650	0.054**		
		0.500	-0.605	0.700	-0.478		
		0.520	-0.604	0.750	-0.535		
		0.530	-0.509	0.820	-0.507		
		0.550	-0.398	0.890	-0.411		
		0.560	-0.300	0.900	-0.436		
		0.580	-0.221	0.960	-0.382		
		0.590	-0.226				
		0.600	-0.229				
		0.640	-0.317				
		0.700	-0.319				
		0.750	0.060**				
		0.820	-0.514				
		0.870	-0.382				
		0.930	-0.309				
		0.960	-0.312				
			Lower Surface				
0.020	-1.307	0.020	-1.202	0.020	-1.023	0.020	-0.188
0.110	-0.255	0.060	-0.904	0.060	-0.273	0.060	-1.254
0.230	-0.063	0.090	-0.379	0.090	-0.244	0.110	-0.236
0.400	0.017	0.120	-0.119**	0.120	-0.445	0.250	-0.250
0.490	0.068	0.200	-0.035	0.200	-0.105	0.400	-0.284
0.630	2.657**	0.260	-0.124	0.250	-0.228	0.490	-0.229
0.750	0.193	0.400	-0.065	0.400	-0.123	0.580	-0.137
0.850	0.249	0.490	-0.022	0.490	0.051	0.650	0.102
0.900	0.330	0.580	0.048	0.580	0.013	0.750	0.331
0.960	0.135	0.640	0.280	0.650	0.050	0.830	0.446
		0.750	0.374	0.750	-0.001**	0.900	0.521
		0.870	0.431	0.890	0.460	0.960	0.383
		0.930	0.350	0.930	0.373		
		0.960	0.223	0.960	0.473		
CN =	0.429		0.445		0.454		0.382

Table G-2. Continued.

Flight 201, Wing sweep = 26°, Time = 9-30-39-500, MINF = 0.899, Camber = 5/10, ALPT = 6.15, BETA = 0.14, QINF = 290.3, RNPU = 2.2E+06, CNWP = 0.5217

η = 0.93		0.76		0.59		0.40	
			Upper Surface				
x/c	CP	*x/c*	CP	*x/c*	CP	*x/c*	CP
0.020	0.207	0.000	0.771	0.000	1.028**	0.010	-0.348
0.060	-0.038	0.020	0.031	0.020	0.076	0.020	-0.163**
0.110	-0.262	0.040	0.128	0.060	0.495**	0.060	-0.587**
0.200	-0.742	0.060	-0.203	0.090	-0.339	0.110	-0.739
0.230	-0.641	0.090	-0.281	0.110	-0.503	0.140	-0.914
0.400	-0.586	0.130	-0.403	0.130	-0.579	0.190	-1.769**
0.490	-0.484	0.150	-0.631	0.150	-0.722	0.250	-0.886
0.590	-0.489	0.200	-0.667	0.210	-0.731	0.400	-0.658
0.630	-0.409	0.250	-0.770	0.250	-0.747	0.490	-0.566
0.700	-0.467	0.260	-0.712	0.340	-0.804	0.580	-0.448
0.750	-0.509	0.280	-0.750	0.370	-0.826	0.650	-0.490
0.810	-0.491	0.290	-0.741	0.400	-0.806	0.700	-0.471
0.840	-0.538	0.310	-0.715	0.410	-0.791	0.750	-0.553
0.900	-0.343	0.320	-0.711	0.430	-0.812	0.800	-1.035
0.960	-0.358	0.340	-0.713	0.440	-0.781	0.830	-0.672
		0.350	-0.318**	0.460	-0.559	0.900	-0.439
		0.370	-0.713	0.490	-0.745	0.960	-0.435**
		0.380	-0.785	0.500	-0.816		
		0.400	-0.684	0.520	-0.793		
		0.410	-0.757	0.540	-0.815		
		0.430	-0.734	0.550	-0.791		
		0.440	-0.676	0.580	-0.750		
		0.460	-0.761	0.600	-0.693		
		0.470	-0.734	0.610	-0.616		
		0.490	-0.737	0.650	0.042**		
		0.500	-0.735	0.700	-0.642		
		0.520	-0.746	0.750	-0.650		
		0.530	-0.718	0.820	-0.243		
		0.550	-0.743	0.890	-0.388		
		0.560	-0.756	0.900	-0.392		
		0.580	-0.720	0.960	-0.364		
		0.590	-0.778				
		0.600	-0.757				
		0.640	-0.793				
		0.700	-0.841				
		0.750	0.087**				
		0.820	-0.278				
		0.870	-0.304				
		0.930	-0.321				
		0.960	-0.312				
			Lower Surface				
0.020	-0.925	0.020	-0.835	0.020	-0.468	0.020	0.140
0.110	-0.142	0.060	-0.053	0.060	0.041	0.060	-1.087
0.230	0.019	0.090	-0.098	0.090	-0.011	0.110	0.005
0.400	0.017	0.120	-0.051**	0.120	-0.267	0.250	-0.127
0.490	0.033	0.200	0.029	0.200	-0.017	0.400	-0.146
0.630	2.692**	0.260	-0.068	0.250	-0.070	0.490	-0.164
0.750	0.182	0.400	-0.034	0.400	-0.060	0.580	-0.110
0.850	0.223	0.490	-0.002	0.490	0.063	0.650	0.149
0.900	0.323	0.580	0.064	0.580	0.033	0.750	0.373
0.960	0.112	0.640	0.285	0.650	0.077	0.830	0.485
		0.750	0.363	0.750	0.018**	0.900	0.559
		0.870	0.453	0.890	0.518	0.960	0.387
		0.930	0.370	0.930	0.416		
		0.960	0.247	0.960	0.519		
CN =	0.515		0.673		0.669		0.605

Table G-2. Continued.

Flight 201, Wing sweep = 26°, Time = 9-30-47-000, MINF = 0.888, Camber = 5/10, ALPT = 8.98, BETA = 0.31, QINF = 285.9, RNPU = 2.2E+06, CNWP = 0.6378

η = 0.93		0.76		0.59		0.40	
			Upper Surface				
x/c	CP	*x/c*	CP	*x/c*	CP	*x/c*	CP
0.020	-0.174	0.000	0.898	0.000	0.837**	0.010	-0.716
0.060	-0.394	0.020	-0.561	0.020	-0.333	0.020	-0.771**
0.110	-0.496	0.040	-0.189	0.060	0.242**	0.060	-0.854**
0.200	-0.847	0.060	-0.532	0.090	-0.684	0.110	-1.014
0.230	-0.783	0.090	-0.626	0.110	-0.863	0.140	-1.134
0.400	-0.762	0.130	-0.691	0.130	-0.852	0.190	-1.813**
0.490	-0.687	0.150	-0.857	0.150	-0.954	0.250	-1.153
0.590	-0.674	0.200	-0.866	0.210	-0.963	0.400	-0.867
0.630	-0.609	0.250	-0.971	0.250	-0.972	0.490	-0.749
0.700	-0.657	0.260	-0.902	0.340	-1.038	0.580	-0.668
0.750	-0.520	0.280	-0.961	0.370	-1.021	0.650	-0.663
0.810	-0.518	0.290	-0.945	0.400	-0.989	0.700	-0.646
0.840	-0.578	0.310	-0.933	0.410	-1.005	0.750	-0.722
0.900	-0.478	0.320	-0.933	0.430	-1.030	0.800	-0.856
0.960	-0.506	0.340	-0.926	0.440	-1.009	0.830	-0.788
		0.350	-0.322**	0.460	-0.787	0.900	-0.537
		0.370	-0.912	0.490	-0.987	0.960	-0.530**
		0.380	-0.989	0.500	-1.043		
		0.400	-0.883	0.520	-0.998		
		0.410	-0.955	0.540	-1.029		
		0.430	-0.952	0.550	-1.025		
		0.440	-0.894	0.580	-0.998		
		0.460	-1.001	0.600	-0.995		
		0.470	-0.959	0.610	-0.994		
		0.490	-0.955	0.650	0.027**		
		0.500	-0.963	0.700	-0.699		
		0.520	-0.961	0.750	-0.638		
		0.530	-0.925	0.820	-0.268		
		0.550	-0.946	0.890	-0.540		
		0.560	-0.959	0.900	-0.498		
		0.580	-0.936	0.960	-0.441		
		0.590	-0.997				
		0.600	-0.990				
		0.640	-0.448				
		0.700	-0.414				
		0.750	0.095**				
		0.820	-0.326				
		0.870	-0.347				
		0.930	-0.362				
		0.960	-0.341				
			Lower Surface				
0.020	-0.201	0.020	0.054	0.020	0.162	0.020	0.486
0.110	-0.026	0.060	0.206	0.060	0.274	0.060	-0.919
0.230	0.134	0.090	0.126	0.090	0.222	0.110	0.159
0.400	0.029	0.120	0.135**	0.120	-0.056	0.250	0.035
0.490	0.049	0.200	0.128	0.200	0.080	0.400	-0.011
0.630	2.718**	0.260	0.044	0.250	0.081	0.490	-0.049
0.750	0.144	0.400	0.033	0.400	0.032	0.580	-0.028
0.850	0.193	0.490	0.030	0.490	0.071	0.650	0.174
0.900	0.275	0.580	0.073	0.580	0.078	0.750	0.393
0.960	0.079	0.640	0.293	0.650	0.085	0.830	0.503
		0.750	0.364	0.750	0.003**	0.900	0.568
		0.870	0.444	0.890	0.533	0.960	0.371
		0.930	0.341	0.930	0.399		
		0.960	0.231	0.960	0.519		
CN =	0.695		0.834		0.916		0.859

Table G-2. Continued.

Flight 201, Wing sweep = 26°, Time = 8-40-10-000, MINF = 0.902, Camber = 10/10, ALPT = 4.04, BETA = 0.45, QINF = 387.2, RNPU = 2.9E+06, CNWP = 0.3596

η = 0.93		0.76		0.59		0.40	
			Upper Surface				
x/c	CP	*x/c*	CP	*x/c*	CP	*x/c*	CP
0.020	0.647	0.000	0.174	0.000	0.787**	0.010	0.512
0.060	0.180	0.020	0.637	0.020	0.685	0.020	0.395**
0.110	-0.139	0.040	0.516	0.060	0.563**	0.060	-0.116**
0.200	-0.852	0.060	0.116	0.090	-0.103	0.110	-0.465
0.230	-0.713	0.090	-0.086	0.110	-0.353	0.140	-0.855
0.400	-0.582	0.130	-0.304	0.130	-0.578	0.190	-1.754**
0.490	-0.397	0.150	-0.602	0.150	-0.749	0.250	-0.630
0.590	-0.146	0.200	-0.690	0.210	-0.724	0.400	-0.585
0.630	-0.175	0.250	-0.717	0.250	-0.704	0.490	-0.311
0.700	-0.213	0.260	-0.681	0.340	-0.716	0.580	-0.291
0.750	-0.801	0.280	-0.693	0.370	-0.706	0.650	-0.356
0.810	-0.741	0.290	-0.662	0.400	-0.682	0.700	-0.329
0.840	-0.796	0.310	-0.642	0.410	-0.667	0.750	-0.435
0.900	-0.210	0.320	-0.647	0.430	-0.675	0.800	-0.970
0.960	-0.207	0.340	-0.646	0.440	-0.661	0.830	-0.941
		0.350	-0.361**	0.460	-0.471	0.900	-0.410
		0.370	-0.651	0.490	-0.468	0.960	-0.399**
		0.380	-0.673	0.500	-0.415		
		0.400	-0.595	0.520	-0.325		
		0.410	-0.632	0.540	-0.296		
		0.430	-0.618	0.550	-0.275		
		0.440	-0.588	0.580	-0.235		
		0.460	-0.651	0.600	-0.253		
		0.470	-0.633	0.610	-0.275		
		0.490	-0.636	0.650	-0.008**		
		0.500	-0.613	0.700	-0.445		
		0.520	-0.615	0.750	-0.465		
		0.530	-0.597	0.820	-0.570		
		0.550	-0.622	0.890	-0.413		
		0.560	-0.623	0.900	-0.400		
		0.580	-0.609	0.960	-0.362		
		0.590	-0.612				
		0.600	-0.508				
		0.640	-0.466				
		0.700	-0.484				
		0.750	0.011**				
		0.820	-0.377				
		0.870	-0.240				
		0.930	-0.261				
		0.960	-0.266				
			Lower Surface				
0.020	-0.999	0.020	-0.848	0.020	-1.406	0.020	-0.777
0.110	-0.744	0.060	-0.860	0.060	-1.030	0.060	-1.091
0.230	-0.167	0.090	-0.872	0.090	-0.955	0.110	-0.248
0.400	0.059	0.120	-0.712**	0.120	-0.530	0.250	-0.342
0.490	0.068	0.200	-0.131	0.200	-0.133	0.400	-0.236
0.630	1.590**	0.260	-0.200	0.250	-0.147	0.490	-0.386
0.750	0.143	0.400	-0.075	0.400	-0.131	0.580	-0.145
0.850	0.153	0.490	-0.004	0.490	-0.007	0.650	0.097
0.900	0.206	0.580	0.073	0.580	0.004	0.750	0.333
0.960	0.110	0.640	0.240	0.650	0.001	0.830	0.438
		0.750	0.290	0.750	-0.035**	0.900	0.523
		0.870	0.365	0.890	0.457	0.960	0.390
		0.930	0.299	0.930	0.355		
		0.960	0.184	0.960	0.360		
CN =	0.358		0.398		0.395		0.375

Table G-2. Continued.

Flight 226, Wing sweep = 26°, Time = 10-2-12-500, MINF = 0.899, Camber = 10/10, ALPT = 5.09, BETA = 0.02, QINF = 299.1, RNPU = 2.3E+06, CNWP = 0.3417

η = 0.93		0.76		0.59		0.40	
			Upper Surface				
x/c	CP	*x/c*	CP	*x/c*	CP	*x/c*	CP
0.020	0.546	0.000	0.197	0.000	3.520**	0.010	0.420
0.060	0.136	0.020	0.376	0.020	0.580	0.020	0.291
0.110	-0.203	0.040	0.376	0.060	-4.718**	0.060	-0.162
0.200	-0.873	0.060	-0.002	0.090	-0.147	0.110	-0.495
0.230	-0.749	0.090	-0.161	0.110	-0.444	0.140	-0.904
0.400	-0.645	0.130	-0.392	0.130	-0.615	0.190	-1.768**
0.490	-0.485	0.150	-0.702	0.150	-0.846	0.250	-0.821
0.590	-0.470	0.200	-0.745	0.210	-0.790	0.400	-0.643
0.630	-0.354	0.250	-0.800	0.250	-0.742	0.490	-0.423
0.700	-0.416	0.260	-0.737	0.340	-0.773	0.580	-0.404
0.750	-0.570	0.280	-0.764	0.370	-0.776	0.650	-0.422
0.810	-0.604	0.290	-0.746	0.400	-0.798	0.700	-0.417
0.840	-0.627	0.310	-0.746	0.410	-2.766**	0.750	-0.495
0.900	-0.263	0.320	-0.729	0.430	-0.766	0.800	-1.023
0.960	-0.272	0.340	-0.711	0.440	-0.733	0.830	-0.860
		0.350	-0.441**	0.460	-0.762	0.900	-0.438
		0.370	-0.693	0.490	-0.678	0.960	-0.439
		0.380	-0.769	0.500	-0.798		
		0.400	-0.661	0.520	-0.721		
		0.410	-0.745	0.540	-0.666		
		0.430	-0.704	0.550	-0.575		
		0.440	-0.657	0.580	-0.438		
		0.460	-0.768	0.600	-0.388		
		0.470	-0.707	0.610	-0.367		
		0.490	-0.713	0.650	2.146**		
		0.500	-0.745	0.700	-0.522		
		0.520	-0.723	0.750	-0.595		
		0.530	-0.703	0.820	-0.590		
		0.550	-0.738	0.890	-0.389		
		0.560	-0.706	0.900	-0.394		
		0.580	-0.711	0.960	-0.343		
		0.590	-0.755				
		0.600	-0.772				
		0.640	-0.770				
		0.700	-0.800				
		0.750	-0.030**				
		0.820	-0.342				
		0.870	-0.274				
		0.930	-0.302				
		0.960	-0.286				
			Lower Surface				
0.020	-0.898	0.020	-0.183	0.020	-1.303	0.020	-0.713
0.110	-0.609	0.060	-0.680	0.060	-0.626	0.060	1.856**
0.230	-0.080	0.090	-0.498	0.090	1.155**	0.110	-0.069
0.400	0.035	0.120	-0.281	0.120	-0.363	0.250	-0.176
0.490	0.062	0.200	-0.076	0.200	-0.143	0.400	-0.230
0.630	1.916**	0.260	-0.144	0.250	-0.092	0.490	-0.242
0.750	0.112	0.400	-0.036	0.400	-0.102	0.580	-0.155
0.850	0.186	0.490	-0.013	0.490	-0.032	0.650	0.107
0.900	0.217	0.580	0.059	0.580	0.023	0.750	0.290
0.960	0.085	0.640	0.242	0.650	-0.057	0.830	0.460
		0.750	0.306	0.750	0.318	0.900	0.508
		0.870	0.378	0.890	0.370	0.960	0.352
		0.930	0.288	0.930	0.299		
		0.960	0.183	0.960	-2.854**		
CN =	0.430		0.558		0.525		0.569

Table G-2. Continued.

Flight 226, Wing sweep = 26°, Time = 10-2-36-500, MINF = 0.899, Camber = 10/10, ALPT = 5.99, BETA = -0.21, QINF = 301.3, RNPU = 2.3E+06, CNWP = 0.4245

η = 0.93		0.76		0.59		0.40	
			Upper Surface				
x/c	CP	*x/c*	CP	*x/c*	CP	*x/c*	CP
0.020	0.512	0.000	0.280	0.000	3.481**	0.010	0.294
0.060	0.109	0.020	0.319	0.020	0.514	0.020	0.228
0.110	-0.085	0.040	0.324	0.060	-4.696**	0.060	-0.304
0.200	-0.883	0.060	-0.030	0.090	-0.200	0.110	-0.606
0.230	-0.870	0.090	-0.200	0.110	-0.484	0.140	-0.931
0.400	-0.683	0.130	-0.381	0.130	-0.656	0.190	-1.767**
0.490	-0.542	0.150	-0.739	0.150	-0.888	0.250	-0.918
0.590	-0.548	0.200	-0.777	0.210	-0.829	0.400	-0.664
0.630	-0.414	0.250	-0.842	0.250	-0.792	0.490	-0.512
0.700	-0.467	0.260	-0.776	0.340	-0.825	0.580	-0.441
0.750	-0.486	0.280	-0.817	0.370	-0.815	0.650	-0.477
0.810	-0.491	0.290	-0.799	0.400	-0.842	0.700	-0.463
0.840	-0.472	0.310	-0.796	0.410	-2.759**	0.750	-0.536
0.900	-0.319	0.320	-0.779	0.430	-0.833	0.800	-1.048
0.960	-0.325	0.340	-0.758	0.440	-0.797	0.830	-0.906
		0.350	-0.452**	0.460	-0.821	0.900	-0.464
		0.370	-0.741	0.490	-0.753	0.960	-0.465
		0.380	-0.824	0.500	-0.856		
		0.400	-0.698	0.520	-0.798		
		0.410	-0.805	0.540	-0.808		
		0.430	-0.754	0.550	-0.776		
		0.440	-0.674	0.580	-0.712		
		0.460	-0.819	0.600	-0.634		
		0.470	-0.745	0.610	-0.603		
		0.490	-0.769	0.650	2.118**		
		0.500	-0.775	0.700	-0.589		
		0.520	-0.715	0.750	-0.647		
		0.530	-0.752	0.820	-0.529		
		0.550	-0.803	0.890	-0.392		
		0.560	-0.760	0.900	-0.423		
		0.580	-0.777	0.960	-0.370		
		0.590	-0.818				
		0.600	-0.833				
		0.640	-0.824				
		0.700	-0.853				
		0.750	-0.028**				
		0.820	-0.311				
		0.870	-0.299				
		0.930	-0.334				
		0.960	-0.329				
			Lower Surface				
0.020	-0.881	0.020	-0.172	0.020	-1.152	0.020	-0.571
0.110	-0.530	0.060	-0.531	0.060	-0.297	0.060	1.830**
0.230	-0.066	0.090	-0.455	0.090	1.133**	0.110	-0.026
0.400	0.040	0.120	-0.110	0.120	-0.333	0.250	-0.133
0.490	0.056	0.200	-0.073	0.200	-0.147	0.400	-0.176
0.630	1.889**	0.260	-0.065	0.250	-0.046	0.490	-0.216
0.750	0.117	0.400	-0.026	0.400	-0.089	0.580	-0.142
0.850	0.187	0.490	-0.014	0.490	-0.022	0.650	0.108
0.900	0.228	0.580	0.069	0.580	0.039	0.750	0.305
0.960	0.075	0.640	0.220	0.650	-0.051	0.830	0.476
		0.750	0.290	0.750	0.343	0.900	0.518
		0.870	0.340	0.890	0.391	0.960	0.358
		0.930	0.259	0.930	0.321		
		0.960	0.165	0.960	-2.845**		
CN =	0.464		0.611		0.626		0.652

Table G-2. Continued.

Flight 226, Wing sweep = 26°, Time = 10-2-57-500, MINF = 0.902, Camber = 10/10, ALPT = 7.98, BETA = -0.15, QINF = 308.0, RNPU = 2.3E+06, CNWP = 0.5400

η = 0.93		0.76		0.59		0.40	
			Upper Surface				
x/c	CP	*x/c*	CP	*x/c*	CP	*x/c*	CP
0.020	0.448	0.000	0.444	0.000	3.377**	0.010	0.126
0.060	0.016	0.020	0.239	0.020	0.403	0.020	0.082
0.110	-0.363	0.040	0.232	0.060	-4.622**	0.060	-0.459
0.200	-0.931	0.060	-0.134	0.090	-0.287	0.110	-0.764
0.230	-0.851	0.090	-0.271	0.110	-0.561	0.140	-0.979
0.400	-0.733	0.130	-0.505	0.130	-0.736	0.190	-1.757**
0.490	-0.647	0.150	-0.793	0.150	-0.950	0.250	-1.035
0.590	-0.599	0.200	-0.831	0.210	-0.900	0.400	-0.764
0.630	-0.524	0.250	-0.910	0.250	-0.872	0.490	-0.646
0.700	-0.577	0.260	-0.851	0.340	-0.923	0.580	-0.562
0.750	-0.547	0.280	-0.891	0.370	-0.926	0.650	-0.565
0.810	-0.549	0.290	-0.891	0.400	-0.966	0.700	-0.563
0.840	-0.555	0.310	-0.884	0.410	-2.727**	0.750	-0.633
0.900	-0.443	0.320	-0.874	0.430	-0.945	0.800	-1.092
0.960	-0.483	0.340	-0.847	0.440	-0.890	0.830	-0.832
		0.350	-0.472**	0.460	-0.931	0.900	-0.550
		0.370	-0.834	0.490	-0.861	0.960	-0.549
		0.380	-0.912	0.500	-0.955		
		0.400	-0.800	0.520	-0.911		
		0.410	-0.884	0.540	-0.922		
		0.430	-0.849	0.550	-0.901		
		0.440	-0.810	0.580	-0.883		
		0.460	-0.928	0.600	-0.877		
		0.470	-0.854	0.610	-0.878		
		0.490	-0.870	0.650	2.043**		
		0.500	-0.885	0.700	-0.982		
		0.520	-0.933	0.750	-0.992		
		0.530	-0.855	0.820	-0.497		
		0.550	-0.908	0.890	-0.461		
		0.560	-0.845	0.900	-0.464		
		0.580	-0.869	0.960	-0.412		
		0.590	-0.916				
		0.600	-0.924				
		0.640	-0.908				
		0.700	-0.660				
		0.750	-0.016**				
		0.820	-0.369				
		0.870	-0.352				
		0.930	-0.394				
		0.960	-0.389				
			Lower Surface				
0.020	-0.580	0.020	-0.158	0.020	-0.535	0.020	-0.159
0.110	-0.304	0.060	-0.259	0.060	0.048	0.060	1.762**
0.230	-0.030	0.090	-0.135	0.090	1.080**	0.110	0.104
0.400	0.029	0.120	0.078	0.120	-0.208	0.250	-0.027
0.490	0.034	0.200	-0.035	0.200	-0.123	0.400	-0.087
0.630	1.820**	0.260	0.014	0.250	0.035	0.490	-0.145
0.750	0.115	0.400	0.008	0.400	-0.028	0.580	-0.099
0.850	0.176	0.490	-0.002	0.490	-0.010	0.650	0.136
0.900	0.224	0.580	0.068	0.580	0.060	0.750	0.331
0.960	0.045	0.640	0.257	0.650	-0.038	0.830	0.499
		0.750	0.332	0.750	0.351	0.900	0.543
		0.870	0.387	0.890	0.447	0.960	0.356
		0.930	0.283	0.930	0.365		
		0.960	0.177	0.960	-2.812**		
CN =	0.573		0.726		0.810		0.810

Table G-2. Continued.

Flight 226, Wing sweep = 26°, Time = 10-3-6-500, MINF = 0.899, Camber = 10/10, ALPT = 10.23, BETA = -0.15, QINF = 316.8, RNPU = 2.4E+06, CNWP = 0.5804

η = 0.93		0.76		0.59		0.40	
			Upper Surface				
x/c	CP	*x/c*	CP	*x/c*	CP	*x/c*	CP
0.020	0.343	0.000	0.641	0.000	3.225**	0.010	-0.047
0.060	-0.095	0.020	0.076	0.020	0.203	0.020	-0.109
0.110	-0.384	0.040	0.077	0.060	-4.554**	0.060	-0.622
0.200	-0.984	0.060	-0.279	0.090	-0.497	0.110	-0.909
0.230	-0.718	0.090	-0.386	0.110	-0.706	0.140	-1.186
0.400	-0.857	0.130	-0.630	0.130	-0.830	0.190	-1.768**
0.490	-0.743	0.150	-0.883	0.150	-1.058	0.250	-1.198
0.590	-0.759	0.200	-0.917	0.210	-0.994	0.400	-0.912
0.630	-0.660	0.250	-1.024	0.250	-0.968	0.490	-0.784
0.700	-0.706	0.260	-0.941	0.340	-1.029	0.580	-0.692
0.750	-0.489	0.280	-0.980	0.370	-1.022	0.650	-0.681
0.810	-0.497	0.290	-0.997	0.400	-1.033	0.700	-0.676
0.840	-0.515	0.310	-0.988	0.410	-2.711**	0.750	-0.716
0.900	-0.464	0.320	-0.963	0.430	-1.064	0.800	-0.869
0.960	-0.507	0.340	-0.964	0.440	-1.023	0.830	-0.987
		0.350	-0.480**	0.460	-1.038	0.900	-0.608
		0.370	-0.946	0.490	-0.961	0.960	-0.565
		0.380	-1.026	0.500	-1.067		
		0.400	-1.037	0.520	-1.028		
		0.410	-1.004	0.540	-1.044		
		0.430	-0.953	0.550	-1.010		
		0.440	-0.942	0.580	-1.022		
		0.460	-1.041	0.600	-1.015		
		0.470	-0.978	0.610	-1.012		
		0.490	-0.974	0.650	1.928**		
		0.500	-1.005	0.700	-0.858		
		0.520	-0.983	0.750	-0.737		
		0.530	-0.983	0.820	-0.562		
		0.550	-1.020	0.890	-0.582		
		0.560	-0.994	0.900	-0.563		
		0.580	-0.982	0.960	-0.505		
		0.590	-1.001				
		0.600	-1.027				
		0.640	-0.500				
		0.700	-0.489				
		0.750	-0.022**				
		0.820	-0.397				
		0.870	-0.405				
		0.930	-0.443				
		0.960	-0.430				
			Lower Surface				
0.020	-0.665	0.020	-0.174	0.020	-0.049	0.020	0.263
0.110	0.002	0.060	0.144	0.060	0.271	0.060	1.654**
0.230	0.032	0.090	0.102	0.090	0.992**	0.110	0.194
0.400	0.040	0.120	0.148	0.120	-0.049	0.250	0.079
0.490	0.044	0.200	0.028	0.200	-0.049	0.400	0.005
0.630	1.711**	0.260	0.106	0.250	0.134	0.490	-0.055
0.750	0.125	0.400	0.062	0.400	0.035	0.580	-0.042
0.850	0.184	0.490	0.032	0.490	0.001	0.650	0.178
0.900	0.254	0.580	0.075	0.580	0.090	0.750	0.363
0.960	0.041	0.640	0.287	0.650	-0.055	0.830	0.533
		0.750	0.355	0.750	0.311	0.900	0.568
		0.870	0.424	0.890	0.472	0.960	0.360
		0.930	0.320	0.930	0.366		
		0.960	0.190	0.960	-2.794**		
CN =	0.673		0.838		0.930		0.989

Table G-2. Continued.

Flight 215, Wing sweep = 26°, Time = 10-6-14-500, MINF = 0.899, Camber = 10/15, ALPT = 3.98, BETA = -0.24, QINF = 301.8, RNPU = 2.3E+06, CNWP = 0.2946

η = 0.93		0.76		0.59		0.40	
			Upper Surface				
x/c	CP	*x/c*	CP	*x/c*	CP	*x/c*	CP
0.020	0.450	0.000	0.144	0.000	-0.140**	0.010	0.293
0.060	0.143	0.020	0.306	0.020	0.604	0.020	0.298
0.110	-0.221	0.040	0.333	0.060	0.549**	0.060	-0.212
0.200	-0.901	0.060	-0.079	0.090	-0.161	0.110	-0.540
0.230	-0.866	0.090	-0.274	0.110	-0.433	0.140	-1.002
0.400	-0.702	0.130	-0.499	0.130	-0.733	0.190	-1.766**
0.490	-0.401	0.150	-0.787	0.150	-0.816	0.250	-0.804
0.590	-0.306	0.200	-0.862	0.210	-0.902	0.400	-0.613
0.630	-0.231	0.250	-1.235	0.250	-0.862	0.490	-0.374
0.700	-0.393	0.260	-0.826	0.340	-0.859	0.580	-0.370
0.750	-0.731	0.280	-0.750	0.370	-0.869	0.650	-0.408
0.810	-0.658	0.290	-0.845	0.400	-0.841	0.700	-0.393
0.840	-0.649	0.310	-0.809	0.410	-2.754**	0.750	-0.501
0.900	-0.553	0.320	-0.698	0.430	-0.853	0.800	-0.902
0.960	-0.562	0.340	-0.808	0.440	-0.696	0.830	-0.764
		0.350	-0.395**	0.460	-0.791	0.900	-0.687
		0.370	-0.792	0.490	-0.563	0.960	-0.703
		0.380	-0.858	0.500	-0.560		
		0.400	-0.986	0.520	-0.374		
		0.410	-0.824	0.540	-0.347		
		0.430	-0.662	0.550	-0.781		
		0.440	-0.723	0.580	-0.993		
		0.460	-0.725	0.600	-0.311		
		0.470	-0.792	0.610	-0.321		
		0.490	-0.682	0.650	-0.901		
		0.500	-0.684	0.700	-0.615		
		0.520	-0.778	0.750	-0.691		
		0.530	-0.768	0.820	-0.704		
		0.550	-0.697	0.890	-0.660		
		0.560	-0.792	0.900	-0.637		
		0.580	-0.749	0.960	-0.589		
		0.590	-0.717				
		0.600	-0.620				
		0.640	-0.625				
		0.700	-0.622				
		0.750	-0.157**				
		0.820	-0.623				
		0.870	-0.497				
		0.930	-0.525				
		0.960	-0.527				
			Lower Surface				
0.020	-1.014	0.020	-1.066	0.020	-1.410	0.020	-0.820
0.110	-0.747	0.060	-0.700	0.060	-1.178	0.060	-0.152
0.230	-0.213	0.090	-0.582	0.090	-0.529	0.110	-0.400
0.400	0.053	0.120	-0.467	0.120	-0.534	0.250	-0.343
0.490	-0.018	0.200	-0.206	0.200	-0.822	0.400	-0.323
0.630	3.040**	0.260	-0.305	0.250	-0.207	0.490	-0.267
0.750	0.052	0.400	-0.126	0.400	-0.165	0.580	-0.133
0.850	0.081	0.490	-0.072	0.490	-0.053	0.650	0.221
0.900	0.127	0.580	0.004	0.580	-0.331	0.750	0.410
0.960	-0.055	0.640	0.132	0.650	-0.172	0.830	0.375
		0.750	0.168	0.750	-0.045	0.900	0.559
		0.870	0.355	0.890	0.344	0.960	0.432
		0.930	0.217	0.930	0.381		
		0.960	0.127	0.960	0.391		
CN =	0.394		0.545		0.440		0.534

Table G-2. Continued.

Flight 215, Wing sweep = 26°, Time = 10-7-7-500, MINF = 0.898, Camber = 10/15, ALPT = 4.05, BETA = -0.07, QINF = 298.5, RNPU = 2.3E+06, CNWP = 0.3422

η = 0.93		0.76		0.59		0.40	
			Upper Surface				
x/c	CP	*x/c*	CP	*x/c*	CP	*x/c*	CP
0.020	0.588	0.000	0.155	0.000	0.014**	0.010	0.438
0.060	0.144	0.020	0.380	0.020	0.616	0.020	0.329
0.110	-0.186	0.040	0.482	0.060	0.675**	0.060	-0.201
0.200	-0.899	0.060	0.032	0.090	-0.135	0.110	-0.493
0.230	-0.734	0.090	-0.158	0.110	-0.410	0.140	-0.935
0.400	-0.576	0.130	-0.363	0.130	-0.628	0.190	-1.772**
0.490	-0.392	0.150	-0.654	0.150	-0.797	0.250	-0.671
0.590	-0.182	0.200	-0.724	0.210	-0.780	0.400	-0.599
0.630	-0.217	0.250	-0.772	0.250	-0.740	0.490	-0.379
0.700	-0.270	0.260	-0.708	0.340	-0.771	0.580	-0.329
0.750	-0.678	0.280	-0.736	0.370	-0.720	0.650	-0.385
0.810	-0.552	0.290	-0.704	0.400	-0.745	0.700	-0.384
0.840	-0.536	0.310	-0.687	0.410	-2.771**	0.750	-0.500
0.900	-0.442	0.320	-0.688	0.430	-0.705	0.800	-0.739
0.960	-0.463	0.340	-0.689	0.440	-0.676	0.830	-0.598
		0.350	-0.381**	0.460	-0.663	0.900	-0.540
		0.370	-0.673	0.490	-0.434	0.960	-0.550
		0.380	-0.731	0.500	-0.429		
		0.400	-0.880	0.520	-0.356		
		0.410	-0.699	0.540	-0.323		
		0.430	-0.656	0.550	-0.320		
		0.440	-0.603	0.580	-0.299		
		0.460	-0.733	0.600	-0.315		
		0.470	-0.667	0.610	-0.318		
		0.490	-0.662	0.650	-0.778		
		0.500	-0.683	0.700	-0.494		
		0.520	-0.667	0.750	-0.571		
		0.530	-0.631	0.820	-0.576		
		0.550	-0.700	0.890	-0.528		
		0.560	-0.667	0.900	-0.533		
		0.580	-0.603	0.960	-0.440		
		0.590	-0.566				
		0.600	-0.485				
		0.640	-0.483				
		0.700	-0.446				
		0.750	-0.017**				
		0.820	-0.498				
		0.870	-0.375				
		0.930	-0.392				
		0.960	-0.402				
			Lower Surface				
0.020	-0.967	0.020	-0.961	0.020	-1.412	0.020	-0.788
0.110	-0.594	0.060	-0.547	0.060	-1.038	0.060	-0.040
0.230	-0.074	0.090	-0.462	0.090	-0.384	0.110	-0.377
0.400	0.049	0.120	-0.330	0.120	-0.404	0.250	-0.220
0.490	0.094	0.200	-0.084	0.200	-0.127	0.400	-0.199
0.630	3.088**	0.260	-0.181	0.250	-0.075	0.490	-0.149
0.750	0.165	0.400	-0.007	0.400	-0.039	0.580	0.003
0.850	0.201	0.490	0.043	0.490	-0.047	0.650	0.230
0.900	0.250	0.580	0.128	0.580	0.135	0.750	0.432
0.960	0.088	0.640	0.271	0.650	-0.050	0.830	0.484
		0.750	0.301	0.750	-0.018	0.900	0.572
		0.870	0.372	0.890	0.457	0.960	0.424
		0.930	0.346	0.930	0.406		
		0.960	0.238	0.960	0.506		
CN =	0.420		0.531		0.483		0.546

Table G-2. Continued.

Flight 215, Wing sweep = 26°, Time = 10-7-21-000, MINF = 0.904, Camber = 10/15, ALPT = 4.07, BETA = 0.02, QINF = 302.5, RNPU = 2.3E+06, CNWP = 0.2596

η = 0.93		0.76		0.59		0.40	
			Upper Surface				
x/c	CP	*x/c*	CP	*x/c*	CP	*x/c*	CP
0.020	0.358	0.000	-0.046	0.000	-0.092**	0.010	0.082
0.060	-0.114	0.020	0.170	0.020	0.280	0.020	0.066
0.110	-0.410	0.040	0.267	0.060	0.303**	0.060	-0.381
0.200	-1.209	0.060	-0.176	0.090	-0.484	0.110	-0.723
0.230	-0.999	0.090	-0.367	0.110	-0.642	0.140	-1.126
0.400	-0.941	0.130	-0.708	0.130	-0.811	0.190	-1.747**
0.490	-0.632	0.150	-0.872	0.150	-1.016	0.250	-0.858
0.590	-0.583	0.200	-0.945	0.210	-0.986	0.400	-0.969
0.630	-0.580	0.250	-1.112	0.250	-1.074	0.490	-0.705
0.700	-0.479	0.260	-0.916	0.340	-0.942	0.580	-0.569
0.750	-1.043	0.280	-1.071	0.370	-1.078	0.650	-0.618
0.810	-0.819	0.290	-0.942	0.400	-0.959	0.700	-0.715
0.840	-0.789	0.310	-1.018	0.410	-2.734**	0.750	-0.823
0.900	-0.772	0.320	-0.900	0.430	-0.949	0.800	-1.011
0.960	-0.666	0.340	-1.016	0.440	-0.908	0.830	-0.873
		0.350	-0.605**	0.460	-0.936	0.900	-0.905
		0.370	-1.004	0.490	-0.757	0.960	-0.771
		0.380	-0.926	0.500	-0.908		
		0.400	-1.060	0.520	-0.667		
		0.410	-1.035	0.540	-0.604		
		0.430	-0.984	0.550	-0.683		
		0.440	-0.834	0.580	-0.663		
		0.460	-0.945	0.600	-0.533		
		0.470	-0.895	0.610	-0.544		
		0.490	-0.888	0.650	-0.922		
		0.500	-0.914	0.700	-0.711		
		0.520	-0.897	0.750	-0.791		
		0.530	-0.860	0.820	-0.792		
		0.550	-0.915	0.890	-0.853		
		0.560	-0.887	0.900	-0.739		
		0.580	-0.885	0.960	-0.672		
		0.590	-0.914				
		0.600	-0.931				
		0.640	-0.844				
		0.700	-0.751				
		0.750	-0.223**				
		0.820	-0.578				
		0.870	-0.575				
		0.930	-0.720				
		0.960	-0.722				
			Lower Surface				
0.020	-1.144	0.020	-1.245	0.020	-1.602	0.020	-0.999
0.110	-0.929	0.060	-0.812	0.060	-1.248	0.060	-0.362
0.230	-0.296	0.090	-0.662	0.090	-0.594	0.110	-0.590
0.400	-0.168	0.120	-0.535	0.120	-0.614	0.250	-0.546
0.490	-0.138	0.200	-0.416	0.200	-0.363	0.400	-0.525
0.630	3.048**	0.260	-0.486	0.250	-0.297	0.490	-0.251
0.750	-0.053	0.400	-0.325	0.400	-0.225	0.580	-0.218
0.850	-0.033	0.490	-0.162	0.490	-0.263	0.650	0.018
0.900	0.004	0.580	-0.198	0.580	-0.210	0.750	0.086
0.960	-0.157	0.640	0.041	0.650	-0.158	0.830	0.168
		0.750	0.082	0.750	-0.249	0.900	0.240
		0.870	0.162	0.890	0.133	0.960	0.114
		0.930	0.143	0.930	0.206		
		0.960	-0.083	0.960	0.244		
CN =	0.475		0.530		0.512		0.547

Table G-2. Continued.

Flight 198, Wing sweep = 26°, Time = 14-8-15-000, MINF = 0.905, Camber = 0/11, ALPT = 4.07, BETA = -0.03, QINF = 295.2, RNPU = 2.2E+06, CNWP = 0.3235

η = 0.93		0.76		0.59		0.40	
			Upper Surface				
x/c	CP	*x/c*	CP	*x/c*	CP	*x/c*	CP
0.020	0.005	0.000	0.896	0.000	-5.503**	0.010	-0.679**
0.060	-0.069	0.020	-0.417**	0.020	-0.225**	0.020	-0.617**
0.110	-0.173	0.040	-0.143	0.060	-0.992**	0.060	-0.579
0.200	-0.183	0.060	-0.273	0.090	-0.425	0.110	-0.564
0.230	-0.310	0.090	-0.251	0.110	-0.472	0.140	1.930**
0.400	-0.098	0.130	-0.307	0.130	-0.378	0.190	-5.368**
0.490	-0.119	0.150	-0.404	0.150	-0.407	0.250	-0.498
0.590	-0.197	0.200	-0.302	0.210	-0.455	0.400	-0.502
0.630	-0.222	0.250	-0.471	0.250	-0.469	0.490	-0.252
0.700	-0.328	0.260	-0.383	0.340	-0.564	0.580	-0.276
0.750	-0.829	0.280	-0.444	0.370	-0.546	0.650	-0.337
0.810	-0.828	0.290	-0.464	0.400	-0.465	0.700	-0.311
0.840	-0.794	0.310	-0.429	0.410	-0.408	0.750	-0.432
0.900	-0.304	0.320	-0.415	0.430	-0.483	0.800	-0.986
0.960	-0.340	0.340	-0.463	0.440	-0.478	0.830	-0.946
		0.350	-0.347**	0.460	-0.477	0.900	-0.432
		0.370	-0.451	0.490	-0.214	0.960	-0.432
		0.380	-0.470	0.500	-0.252		
		0.400	-0.359	0.520	-0.195		
		0.410	-0.491	0.540	-0.213		
		0.430	-0.470	0.550	-0.197		
		0.440	-0.399	0.580	-0.203		
		0.460	-0.567	0.600	-0.227		
		0.470	-0.461	0.610	-0.160		
		0.490	-0.334	0.650	-2.600**		
		0.500	-0.192	0.700	-0.430		
		0.520	-0.157	0.750	-0.496		
		0.530	-0.120	0.820	-0.913		
		0.550	-0.160	0.890	-0.491		
		0.560	-0.125	0.900	-0.506		
		0.580	-0.120	0.960	-0.509		
		0.590	-0.163				
		0.600	-0.218				
		0.640	-2.437**				
		0.700	-0.366				
		0.750	-0.653				
		0.820	-2.613**				
		0.870	-0.340				
		0.930	-0.340				
		0.960	-0.345				
			Lower Surface				
0.020	-0.717	0.020	-0.411	0.020	-0.183	0.020	0.258
0.110	-0.486	0.060	-0.138	0.060	0.010	0.060	3.461**
0.230	-0.025	0.090	-0.218	0.090	-0.127	0.110	-0.181
0.400	-0.008	0.120	-0.335	0.120	-0.538	0.250	-0.380
0.490	0.003	0.200	-0.473	0.200	-0.434	0.400	-0.285
0.630	3.505**	0.260	-0.248	0.250	-0.380	0.490	-0.425
0.750	0.228	0.400	-2.631**	0.400	-0.104	0.580	-0.093
0.850	0.313	0.490	-0.022	0.490	0.028	0.650	0.126
0.900	0.358	0.580	0.117	0.580	0.029	0.750	0.347
0.960	0.153	0.640	0.490	0.650	0.306	0.830	0.454
		0.750	0.354	0.750	0.022	0.900	0.555
		0.870	0.426	0.890	********	0.960	0.390
		0.930	0.378	0.930	0.421		
		0.960	0.225	0.960	-2.629**		
CN =	0.306		0.401		0.417		0.424

Table G-2. Continued.

Flight 198, Wing sweep = 26°, Time = 14-8-25-500, MINF = 0.909, Camber = 0/10, ALPT = 5.16, BETA = 0.15, QINF = 296.5, RNPU = 2.2E+06, CNWP = 0.3633

η = 0.93		0.76		0.59		0.40	
			Upper Surface				
x/c	CP	*x/c*	CP	*x/c*	CP	*x/c*	CP
0.020	-0.137	0.000	0.918	0.000	-5.471**	0.010	-0.683**
0.060	-0.328	0.020	-0.596**	0.020	-0.303**	0.020	-0.728**
0.110	-0.191	0.040	-0.240	0.060	-1.079**	0.060	-0.697
0.200	-0.278	0.060	-0.467	0.090	-0.558	0.110	-0.668
0.230	-0.316	0.090	-0.450	0.110	-0.643	0.140	1.896**
0.400	-0.426	0.130	-0.471	0.130	-0.516	0.190	-5.337**
0.490	-0.381	0.150	-0.481	0.150	-0.514	0.250	-0.715
0.590	-0.380	0.200	-0.386	0.210	-0.598	0.400	-0.556
0.630	-0.313	0.250	-0.567	0.250	-0.548	0.490	-0.435
0.700	-0.393	0.260	-0.478	0.340	-0.647	0.580	-0.420
0.750	-0.752	0.280	-0.567	0.370	-0.670	0.650	-0.419
0.810	-0.808	0.290	-0.551	0.400	-0.683	0.700	-0.413
0.840	-0.745	0.310	-0.510	0.410	-0.602	0.750	-0.482
0.900	-0.315	0.320	-0.490	0.430	-0.644	0.800	-1.017
0.960	-0.374	0.340	-0.538	0.440	-0.631	0.830	-0.958
		0.350	-0.342**	0.460	-0.642	0.900	-0.437
		0.370	-0.525	0.490	-0.557	0.960	-0.437
		0.380	-0.543	0.500	-0.567		
		0.400	-0.452	0.520	-0.518		
		0.410	-0.568	0.540	-0.550		
		0.430	-0.558	0.550	-0.514		
		0.440	-0.481	0.580	-0.495		
		0.460	-0.651	0.600	-0.480		
		0.470	-0.545	0.610	-0.365		
		0.490	-0.563	0.650	-2.581**		
		0.500	-0.595	0.700	-0.479		
		0.520	-0.566	0.750	-0.559		
		0.530	-0.547	0.820	-0.766		
		0.550	-0.573	0.890	-0.432		
		0.560	-0.560	0.900	-0.445		
		0.580	-0.554	0.960	-0.451		
		0.590	-0.581				
		0.600	-0.637				
		0.640	-2.418**				
		0.700	-0.526				
		0.750	-0.560				
		0.820	-2.594**				
		0.870	-0.313				
		0.930	-0.334				
		0.960	-0.317				
			Lower Surface				
0.020	-0.421	0.020	-0.233	0.020	-0.032	0.020	0.373
0.110	-0.410	0.060	-0.051	0.060	0.083	0.060	3.454**
0.230	-0.032	0.090	-0.146	0.090	-0.042	0.110	-0.105
0.400	-0.018	0.120	-0.244	0.120	-0.454	0.250	-0.238
0.490	-0.007	0.200	-0.096	0.200	-0.295	0.400	-0.243
0.630	3.497**	0.260	-0.291	0.250	-0.275	0.490	-0.377
0.750	0.215	0.400	-2.611**	0.400	-0.095	0.580	-0.120
0.850	0.300	0.490	-0.032	0.490	0.025	0.650	0.119
0.900	0.339	0.580	0.105	0.580	0.015	0.750	0.358
0.960	0.142	0.640	0.469	0.650	0.298	0.830	0.471
		0.750	0.360	0.750	0.030	0.900	0.570
		0.870	0.442	0.890	********	0.960	0.381
		0.930	0.384	0.930	0.420		
		0.960	0.217	0.960	-2.610**		
CN =	0.418		0.544		0.546		0.562

Table G-2. Continued.

Flight 198, Wing sweep = 26°, Time = 14-8-31-000, MINF = 0.909, Camber = 0/10, ALPT = 6.15, BETA = 0.47, QINF = 296.0, RNPU = 2.2E+06, CNWP = 0.4054

η = 0.93		0.76		0.59		0.40	
			Upper Surface				
x/c	CP	*x/c*	CP	*x/c*	CP	*x/c*	CP
0.020	-0.269	0.000	0.923	0.000	-5.477**	0.010	-0.659**
0.060	-0.381	0.020	-0.632**	0.020	-0.509**	0.020	-0.747**
0.110	-0.349	0.040	-0.424	0.060	-1.129**	0.060	-0.838
0.200	-0.434	0.060	-0.541	0.090	-0.608	0.110	-0.746
0.230	-0.369	0.090	-0.527	0.110	-0.695	0.140	0.261**
0.400	-0.476	0.130	-0.554	0.130	-0.601	0.190	-5.343**
0.490	-0.441	0.150	-0.567	0.150	-0.595	0.250	-0.770
0.590	-0.411	0.200	-0.467	0.210	-0.673	0.400	-0.582
0.630	-0.375	0.250	-0.645	0.250	-0.634	0.490	-0.562
0.700	-0.428	0.260	-0.538	0.340	-0.707	0.580	-0.471
0.750	-0.754	0.280	-0.628	0.370	-0.676	0.650	-0.463
0.810	-0.814	0.290	-0.630	0.400	-0.740	0.700	-0.464
0.840	-0.765	0.310	-0.590	0.410	-0.671	0.750	-0.546
0.900	-0.348	0.320	-0.575	0.430	-0.719	0.800	-1.052
0.960	-0.399	0.340	-0.607	0.440	-0.691	0.830	-0.928
		0.350	-0.329**	0.460	-0.708	0.900	-0.467
		0.370	-0.588	0.490	-0.592	0.960	-0.467
		0.380	-0.622	0.500	-0.749		
		0.400	-0.548	0.520	-0.722		
		0.410	-0.650	0.540	-0.716		
		0.430	-0.640	0.550	-0.677		
		0.440	-0.551	0.580	-0.614		
		0.460	-0.734	0.600	-0.539		
		0.470	-0.621	0.610	-0.461		
		0.490	-0.619	0.650	-2.582**		
		0.500	-0.636	0.700	-0.613		
		0.520	-0.625	0.750	-0.622		
		0.530	-0.608	0.820	-0.630		
		0.550	-0.634	0.890	-0.449		
		0.560	-0.627	0.900	-0.452		
		0.580	-0.598	0.960	-0.459		
		0.590	-0.630				
		0.600	-0.694				
		0.640	-2.419**				
		0.700	-0.693				
		0.750	-0.473				
		0.820	-2.595**				
		0.870	-0.299				
		0.930	-0.350				
		0.960	-0.332				
			Lower Surface				
0.020	-0.217	0.020	-0.080	0.020	0.068	0.020	0.494
0.110	-0.353	0.060	0.039	0.060	0.153	0.060	3.463**
0.230	-0.021	0.090	-0.060	0.090	0.028	0.110	-0.019
0.400	-0.015	0.120	-0.098	0.120	-0.400	0.250	-0.181
0.490	0.000	0.200	-0.056	0.200	-0.216	0.400	-0.195
0.630	3.507**	0.260	-0.221	0.250	-0.175	0.490	-0.231
0.750	0.189	0.400	-2.612**	0.400	-0.091	0.580	-0.117
0.850	0.278	0.490	-0.021	0.490	0.036	0.650	0.138
0.900	0.326	0.580	0.109	0.580	0.026	0.750	0.382
0.960	0.129	0.640	0.485	0.650	0.309	0.830	0.484
		0.750	0.350	0.750	0.019	0.900	0.575
		0.870	0.431	0.890	********	0.960	0.391
		0.930	0.381	0.930	0.432		
		0.960	0.210	0.960	-2.611**		
CN =	0.472		0.629		0.626		0.656

Table G-2. Continued.

Flight 198, Wing sweep = 26°, Time = 14-8-42-500, MINF = 0.889, Camber = 0/10, ALPT = 7.06, BETA = 0.47, QINF = 283.6, RNPU = 2.2E+06, CNWP = 0.5175

η = 0.93		0.76		0.59		0.40	
			Upper Surface				
x/c	CP	*x/c*	CP	*x/c*	CP	*x/c*	CP
0.020	-0.603	0.000	0.901	0.000	-5.721**	0.010	-0.922**
0.060	-0.611	0.020	-0.907**	0.020	-0.717**	0.020	-0.858**
0.110	-0.653	0.040	-0.596	0.060	-1.228**	0.060	-0.997
0.200	-0.537	0.060	-0.733	0.090	-0.779	0.110	-0.872
0.230	-0.473	0.090	-0.695	0.110	-0.877	0.140	-0.834**
0.400	-0.526	0.130	-0.748	0.130	-0.770	0.190	-5.581**
0.490	-0.492	0.150	-0.740	0.150	-0.760	0.250	-0.882
0.590	-0.506	0.200	-0.616	0.210	-0.801	0.400	-0.670
0.630	-0.405	0.250	-0.772	0.250	-0.774	0.490	-0.666
0.700	-0.463	0.260	-0.673	0.340	-0.856	0.580	-0.563
0.750	-0.824	0.280	-0.758	0.370	-0.819	0.650	-0.536
0.810	-0.903	0.290	-0.771	0.400	-0.831	0.700	-0.541
0.840	-0.827	0.310	-0.727	0.410	-0.780	0.750	-0.624
0.900	-0.384	0.320	-0.710	0.430	-0.837	0.800	-0.641
0.960	-0.421	0.340	-0.740	0.440	-0.809	0.830	-0.514
		0.350	-0.354**	0.460	-0.830	0.900	-0.413
		0.370	-0.733	0.490	-0.724	0.960	-0.416
		0.380	-0.752	0.500	-0.853		
		0.400	-0.664	0.520	-0.816		
		0.410	-0.773	0.540	-0.840		
		0.430	-0.745	0.550	-0.828		
		0.440	-0.662	0.580	-0.834		
		0.460	-0.856	0.600	-0.783		
		0.470	-0.775	0.610	-0.707		
		0.490	-0.746	0.650	-2.700**		
		0.500	-0.721	0.700	-0.727		
		0.520	-0.770	0.750	-0.775		
		0.530	-0.725	0.820	-0.445		
		0.550	-0.754	0.890	-0.370		
		0.560	-0.749	0.900	-0.375		
		0.580	-0.738	0.960	-0.384		
		0.590	-0.740				
		0.600	-0.832				
		0.640	-2.529**				
		0.700	-0.762				
		0.750	-0.399				
		0.820	-2.713**				
		0.870	-0.274				
		0.930	-0.292				
		0.960	-0.301				
			Lower Surface				
0.020	-0.096	0.020	0.084	0.020	0.181	0.020	0.546
0.110	-0.173	0.060	0.138	0.060	0.241	0.060	3.610**
0.230	-0.019	0.090	0.039	0.090	0.093	0.110	0.012
0.400	-0.008	0.120	-0.013	0.120	-0.347	0.250	-0.108
0.490	-0.016	0.200	0.009	0.200	-0.107	0.400	-0.101
0.630	3.656**	0.260	-0.136	0.250	-0.086	0.490	-0.167
0.750	0.176	0.400	-2.731**	0.400	-0.036	0.580	-0.090
0.850	0.260	0.490	-0.023	0.490	0.037	0.650	0.139
0.900	0.311	0.580	0.113	0.580	0.038	0.750	0.389
0.960	0.111	0.640	0.496	0.650	0.303	0.830	0.489
		0.750	0.350	0.750	0.030	0.900	0.585
		0.870	0.403	0.890	********	0.960	0.382
		0.930	0.350	0.930	0.422		
		0.960	0.207	0.960	-2.730**		
CN =	0.574		0.739		0.748		0.722

Table G-2. Continued.

Flight 198, Wing sweep = 26°, Time = 14-9-15-000, MINF = 0.891, Camber = 0/10, ALPT = 7.95, BETA = 0.26, QINF = 293.2, RNPU = 2.2E+06, CNWP = 0.5712

η = 0.93		0.76		0.59		0.40	
			Upper Surface				
x/c	CP	*x/c*	CP	*x/c*	CP	*x/c*	CP
0.020	-0.703	0.000	0.835	0.000	-5.587**	0.010	-1.014**
0.060	-0.740	0.020	-1.055**	0.020	-0.804**	0.020	-1.053**
0.110	-0.744	0.040	-0.721	0.060	-1.294**	0.060	-1.080
0.200	-0.671	0.060	-0.858	0.090	-0.889	0.110	-0.977
0.230	-0.579	0.090	-0.840	0.110	-0.994	0.140	-0.986**
0.400	-0.655	0.130	-0.856	0.130	-0.873	0.190	-5.451**
0.490	-0.577	0.150	-0.861	0.150	-0.870	0.250	-1.005
0.590	-0.573	0.200	-0.734	0.210	-0.902	0.400	-0.739
0.630	-0.503	0.250	-0.872	0.250	-0.860	0.490	-0.695
0.700	-0.542	0.260	-0.777	0.340	-0.947	0.580	-0.633
0.750	-0.937	0.280	-0.869	0.370	-0.937	0.650	-0.582
0.810	-1.039	0.290	-0.866	0.400	-0.945	0.700	-0.602
0.840	-0.983	0.310	-0.806	0.410	-0.897	0.750	-0.690
0.900	-0.494	0.320	-0.807	0.430	-0.944	0.800	-0.847
0.960	-0.551	0.340	-0.830	0.440	-0.902	0.830	-0.643
		0.350	-0.387**	0.460	-0.938	0.900	-0.529
		0.370	-0.809	0.490	-0.858	0.960	-0.502
		0.380	-0.829	0.500	-0.945		
		0.400	-0.761	0.520	-0.905		
		0.410	-0.874	0.540	-0.948		
		0.430	-0.846	0.550	-0.907		
		0.440	-0.775	0.580	-0.903		
		0.460	-0.944	0.600	-0.890		
		0.470	-0.848	0.610	-0.820		
		0.490	-0.828	0.650	-2.664**		
		0.500	-0.841	0.700	-0.930		
		0.520	-0.846	0.750	-0.938		
		0.530	-0.825	0.820	-0.434		
		0.550	-0.846	0.890	-0.406		
		0.560	-0.840	0.900	-0.407		
		0.580	-0.823	0.960	-0.438		
		0.590	-0.848				
		0.600	-0.903				
		0.640	-2.499**				
		0.700	-0.492				
		0.750	-0.276				
		0.820	-2.677**				
		0.870	-0.309				
		0.930	-0.331				
		0.960	-0.321				
			Lower Surface				
0.020	0.013	0.020	0.232	0.020	0.327	0.020	0.654
0.110	-0.113	0.060	0.236	0.060	0.307	0.060	3.440**
0.230	-0.014	0.090	0.127	0.090	0.200	0.110	0.099
0.400	-0.008	0.120	0.068	0.120	-0.272	0.250	-0.044
0.490	-0.004	0.200	0.054	0.200	-0.041	0.400	-0.045
0.630	3.484**	0.260	-0.079	0.250	-0.015	0.490	-0.138
0.750	0.148	0.400	-2.694**	0.400	0.004	0.580	-0.058
0.850	0.248	0.490	0.005	0.490	0.062	0.650	0.150
0.900	0.282	0.580	0.110	0.580	0.037	0.750	0.414
0.960	0.086	0.640	0.476	0.650	0.315	0.830	0.507
		0.750	0.331	0.750	0.037	0.900	0.599
		0.870	0.411	0.890	********	0.960	0.374
		0.930	0.335	0.930	0.424		
		0.960	0.189	0.960	-2.693**		
CN =	0.681		0.797		0.872		0.846

Table G-2. Continued.

Flight 198, Wing sweep = 26°, Time = 14-9-25-000, MINF = 0.892, Camber = 0/10, ALPT = 9.21, BETA = 0.55, QINF = 303.2, RNPU = 2.3E+06, CNWP = 0.5879

η = 0.93		0.76		0.59		0.40	
			Upper Surface				
x/c	CP	*x/c*	CP	*x/c*	CP	*x/c*	CP
0.020	-0.774	0.000	0.814	0.000	-5.455**	0.010	-1.067**
0.060	-0.797	0.020	-1.119**	0.020	-0.869**	0.020	-1.090**
0.110	-0.796	0.040	-0.800	0.060	-1.323**	0.060	-1.137
0.200	-0.756	0.060	-0.915	0.090	-0.942	0.110	-1.066
0.230	-0.625	0.090	-0.905	0.110	-1.056	0.140	-1.066**
0.400	-0.695	0.130	-0.888	0.130	-0.940	0.190	-5.324**
0.490	-0.642	0.150	-0.897	0.150	-0.917	0.250	-1.080
0.590	-0.623	0.200	-0.804	0.210	-0.961	0.400	-0.807
0.630	-0.549	0.250	-0.938	0.250	-0.920	0.490	-0.723
0.700	-0.613	0.260	-0.814	0.340	-1.001	0.580	-0.679
0.750	-0.813	0.280	-0.917	0.370	-0.993	0.650	-0.610
0.810	-0.959	0.290	-0.924	0.400	-0.980	0.700	-0.647
0.840	-0.945	0.310	-0.853	0.410	-0.931	0.750	-0.705
0.900	-0.516	0.320	-0.837	0.430	-1.012	0.800	-0.828
0.960	-0.576	0.340	-0.895	0.440	-0.971	0.830	-0.700
		0.350	-0.378**	0.460	-0.979	0.900	-0.512
		0.370	-0.874	0.490	-0.911	0.960	-0.534
		0.380	-0.897	0.500	-1.004		
		0.400	-0.788	0.520	-0.965		
		0.410	-0.912	0.540	-0.981		
		0.430	-0.900	0.550	-0.960		
		0.440	-0.808	0.580	-0.952		
		0.460	-1.010	0.600	-0.942		
		0.470	-0.895	0.610	-0.885		
		0.490	-0.881	0.650	-2.629**		
		0.500	-0.891	0.700	-0.983		
		0.520	-0.887	0.750	-0.691		
		0.530	-0.876	0.820	-0.498		
		0.550	-0.888	0.890	-0.468		
		0.560	-0.889	0.900	-0.453		
		0.580	-0.864	0.960	-0.458		
		0.590	-0.888				
		0.600	-0.950				
		0.640	-2.469**				
		0.700	-0.395				
		0.750	-0.315				
		0.820	-2.641**				
		0.870	-0.326				
		0.930	-0.344				
		0.960	-0.334				
			Lower Surface				
0.020	0.074	0.020	0.278	0.020	0.401	0.020	0.741
0.110	-0.059	0.060	0.289	0.060	0.393	0.060	3.274**
0.230	0.015	0.090	0.187	0.090	0.265	0.110	0.177
0.400	0.020	0.120	0.141	0.120	-0.187	0.250	0.000
0.490	0.001	0.200	0.114	0.200	0.065	0.400	-0.009
0.630	3.317**	0.260	-0.032	0.250	0.049	0.490	-0.083
0.750	0.160	0.400	-2.658**	0.400	0.030	0.580	-0.043
0.850	0.220	0.490	0.026	0.490	0.066	0.650	0.188
0.900	0.286	0.580	0.130	0.580	0.063	0.750	0.435
0.960	0.067	0.640	0.481	0.650	0.310	0.830	0.503
		0.750	0.344	0.750	-0.002	0.900	0.610
		0.870	0.419	0.890	********	0.960	0.373
		0.930	0.355	0.930	0.432		
		0.960	0.203	0.960	-2.657**		
CN =	0.729		0.860		0.930		0.925

Table G-2. Concluded.

Flight 198, Wing sweep = 26°, Time = 14-9-29-000, MINF = 0.887, Camber = 0/10, ALPT = 10.01, BETA = -0.06, QINF = 304.7, RNPU = 2.3E+06, CNWP = 0.6142

η = 0.93		0.76		0.59		0.40	
			Upper Surface				
x/c	CP	*x/c*	CP	*x/c*	CP	*x/c*	CP
0.020	-0.925	0.000	0.727	0.000	-5.457**	0.010	-1.181**
0.060	-0.944	0.020	-1.271**	0.020	-1.000**	0.020	-1.177**
0.110	-0.934	0.040	-0.913	0.060	-1.351**	0.060	-1.210
0.200	-0.890	0.060	-1.017	0.090	-1.046	0.110	-1.188
0.230	-0.725	0.090	-0.979	0.110	-1.145	0.140	-1.144**
0.400	-0.767	0.130	-1.011	0.130	-1.034	0.190	-5.327**
0.490	-0.720	0.150	-0.995	0.150	-0.993	0.250	-1.147
0.590	-0.694	0.200	-0.903	0.210	-1.056	0.400	-0.866
0.630	-0.633	0.250	-1.060	0.250	-1.017	0.490	-0.764
0.700	-0.701	0.260	-0.921	0.340	-1.072	0.580	-0.728
0.750	-0.600	0.280	-1.002	0.370	-1.074	0.650	-0.664
0.810	-0.722	0.290	-1.001	0.400	-1.092	0.700	-0.723
0.840	-0.729	0.310	-0.936	0.410	-1.033	0.750	-0.760
0.900	-0.575	0.320	-0.940	0.430	-1.099	0.800	-0.797
0.960	-0.644	0.340	-0.990	0.440	-1.075	0.830	-0.731
		0.350	-0.407**	0.460	-1.095	0.900	-0.549
		0.370	-0.938	0.490	-0.944	0.960	-0.547
		0.380	-0.979	0.500	-1.091		
		0.400	-0.885	0.520	-1.044		
		0.410	-1.014	0.540	-1.060		
		0.430	-0.982	0.550	-1.032		
		0.440	-0.890	0.580	-1.015		
		0.460	-1.089	0.600	-1.013		
		0.470	-0.951	0.610	-0.966		
		0.490	-0.957	0.650	-2.645**		
		0.500	-0.955	0.700	-0.638		
		0.520	-0.966	0.750	-0.640		
		0.530	-0.941	0.820	-0.540		
		0.550	-0.984	0.890	-0.517		
		0.560	-0.956	0.900	-0.496		
		0.580	-0.954	0.960	-0.497		
		0.590	-0.947				
		0.600	-0.744				
		0.640	-2.487**				
		0.700	-0.398				
		0.750	-0.337				
		0.820	-2.658**				
		0.870	-0.344				
		0.930	-0.369				
		0.960	-0.345				
			Lower Surface				
0.020	0.135	0.020	0.443	0.020	0.475	0.020	0.776
0.110	-0.008	0.060	0.341	0.060	0.453	0.060	3.227**
0.230	0.036	0.090	0.240	0.090	0.308	0.110	0.260
0.400	0.018	0.120	0.172	0.120	-0.125	0.250	0.049
0.490	0.010	0.200	0.147	0.200	0.089	0.400	0.019
0.630	3.269**	0.260	0.006	0.250	0.098	0.490	-0.055
0.750	0.154	0.400	-2.675**	0.400	0.054	0.580	-0.005
0.850	0.207	0.490	0.039	0.490	0.042	0.650	0.193
0.900	0.265	0.580	0.134	0.580	0.082	0.750	0.422
0.960	0.059	0.640	0.471	0.650	0.314	0.830	0.524
		0.750	0.326	0.750	-0.018	0.900	0.594
		0.870	0.420	0.890	********	0.960	0.381
		0.930	0.348	0.930	0.410		
		0.960	0.200	0.960	-2.673**		
CN =	0.780		0.914		0.974		1.007

APPENDIX H

Wing Pressure Coefficients for Dynamic Pressures From 300 to 800 lb/ft^2 and Mach Numbers from 0.61 to 1.41.

Leading-edge wing sweep is 26° unless otherwise indicated at flight number. Table H-1 contains a summary of the data listing in table H-2. The asterisks (*) in table H-2 indicate invalid values. Flight 229 has less data in two upper rows because the pressure transducers were used for boundary-layer data. Camber is $\delta_{LE/TE}$. Refer to Nomenclature for definitions.

Table H-1. Summary of data.

Flight	Time	MINF	Camber	ALPT	BETA	QINF	RNPU	CNWP
201	8-49-1-500	0.944	0/2	5.05	0.14	303.4	2.8E+06	0.3340
201	8-49-6-500	0.943	0/2	5.07	0.14	383.7	2.8E+06	0.3326
221	14-17-53-500	0.949	0/2	6.09	0.08	298.4	2.2E+06	0.2762
221	14-18-4-000	0.952	0/2	7.06	-0.24	301.5	2.2E+06	0.3371
221	14-18-7-000	0.953	0/2	8.08	-0.67	302.1	2.2E+06	0.3593
221	14-18-10-000	0.949	0/2	9.25	-0.76	299.8	2.2E+06	0.4154
221	14-18-12-000	0.944	0/2	10.28	-0.85	296.7	2.2E+06	0.4688
229	11-42-7-000	0.950	0/2	6.07	0.28	301.4	2.2E+06	0.2974
229	11-42-16-500	0.949	0/2	6.10	0.31	300.4	2.2E+06	0.3195
229	11-42-32-500	0.949	0/2	7.16	0.02	300.6	2.2E+06	0.3334
229	11-42-54-000	0.945	0/2	8.10	-0.30	298.5	2.2E+06	0.3625
229	11-42-59-500	0.948	0/2	9.14	-0.30	302.9	2.2E+06	0.4088
221	14-14-17-500	0.939	0/2	8.06	-0.24	305.6	2.3E+06	0.3526
229	11-46-10-000	0.947	5/2	6.50	-0.10	301.2	2.2E+06	0.3148
229	11-46-40-500	0.946	5/2	6.10	0.19	299.6	2.2E+06	0.2930
217	9-21-19-500	0.606	0/2	5.98	0.48	299.2	3.0E+06	0.3170
217	9-21-36-500	0.651	0/2	4.59	0.37	344.3	3.3E+06	0.2748
217	9-21-44-000	0.700	0/2	4.77	0.11	400.5	3.6E+06	0.2929
217	9-21-49-500	0.751	0/2	4.06	0.37	462.6	4.0E+06	0.2450
217	9-21-55-000	0.803	0/2	3.79	0.48	531.0	4.3E+06	0.2570
217	9-22-0-500	0.851	0/2	4.32	0.89	598.9	4.7E+06	0.2841
217	9-22-6-500	0.883	0/2	4.23	0.48	642.7	4.9E+06	0.2886
217	9-22-11-500	0.900	0/2	4.47	0.86	665.0	5.0E+06	0.3201
217	9-22-18-000	0.909	0/2	4.21	0.72	674.5	5.1E+06	0.2999
217	9-22-20-000	0.907	0/2	4.06	0.92	670.8	5.1E+06	0.3037
217	9-22-27-000	0.900	0/2	4.42	1.03	658.1	5.0E+06	0.3250
218[1]	10-18-15-500	0.930	0/2	6.04	0.69	337.2	2.5E+06	0.5016

[1]Wing sweep of 45° [2]Wing sweep of 58°

Table H-1. Continued.

Flight	Time	MINF	Camber	ALPT	BETA	QINF	RNPU	CNWP
218[1]	10-18-24-500	0.940	0/2	5.73	0.51	337.1	2.5E+06	0.4059
218[1]	10-18-30-500	0.950	0/2	7.03	0.34	341.1	2.5E+06	0.3389
218[1]	10-18-37-000	0.960	0/2	6.65	0.48	344.1	2.5E+06	0.2727
218[1]	10-18-42-000	0.970	0/2	7.59	0.37	347.0	2.5E+06	
218[1]	10-18-52-000	0.980	0/2	8.09	0.45	344.1	2.5E+06	
218[1]	10-19-17-500	0.990	0/2	7.60	0.34	339.2	2.4E+06	
218[1]	10-19-20-500	1.000	0/2	8.73	0.34	348.6	2.5E+06	
218[1]	10-19-25-500	1.006	0/2	8.44	0.43	359.4	2.6E+06	0.3436
218[1]	10-20-12-000	1.050	0/2	6.76	0.45	410.3	2.9E+06	
218[1]	10-20-23-500	1.100	0/2	7.28	0.14	465.0	3.2E+06	
218[1]	10-20-39-000	1.151	0/2	5.88	0.28	523.0	3.5E+06	
218[1]	10-20-53-500	1.200	0/2	7.09	0.19	585.5	3.8E+06	
218[1]	10-20-56-500	1.205	0/2	6.35	0.19	589.8	3.9E+06	
218[1]	10-21-7-500	1.233	0/2	4.63	0.28	615.3	4.0E+06	
194[2]	12-5-0-000	0.884	0/2	8.85	-0.30	304.1	2.3E+06	
194[2]	12-5-2-500	0.890	0/2	8.96	0.18	308.3	2.4E+06	
194[2]	12-5-6-000	0.900	0/2	8.54	0.47	315.2	2.4E+06	
194[2]	12-5-15-000	0.929	0/2	8.04	0.36	334.1	2.5E+06	
194[2]	12-5-21-500	0.950	0/2	7.72	0.36	347.1	2.6E+06	
194[2]	12-5-37-500	1.000	0/2	6.71	0.28	377.8	2.7E+06	
194[2]	12-5-54-000	1.050	0/2	7.07	0.28	414.2	2.9E+06	
194[2]	12-6-9-500	1.100	0/2	6.54	0.34	456.2	3.1E+06	
194[2]	12-6-22-000	1.150	0/2	5.91	0.31	501.4	3.3E+06	
194[2]	12-6-34-000	1.200	0/2	5.70	0.31	551.5	3.6E+06	
194[2]	12-6-46-000	1.249	0/2	5.15	0.23	602.4	3.9E+06	
194[2]	12-7-1-500	1.299	0/2	4.53	0.26	657.7	4.2E+06	
217[2]	11-4-36-500	1.213	0/2	5.51	0.22	595.8	3.9E+06	
217[2]	11-4-52-000	1.216	0/2	4.85	0.17	595.5	3.9E+06	
217[2]	11-5-9-000	1.221	0/2	5.00	0.25	602.6	3.9E+06	
217[2]	11-5-13-500	1.222	0/2	3.56	0.25	603.3	3.9E+06	
217[2]	11-5-15-000	1.224	0/2	2.68	0.25	605.9	3.9E+06	
217[2]	11-5-17-500	1.227	0/2	3.56	0.34	611.8	4.0E+06	
217[2]	11-5-18-500	1.227	0/2	4.60	0.31	614.8	4.0E+06	
217[2]	11-5-19-500	1.228	0/2	5.85	0.28	617.9	4.0E+06	
217[2]	11-5-20-500	1.226	0/2	6.83	0.31	618.7	4.0E+06	
217[2]	11-5-21-500	1.225	0/2	7.64	0.28	618.8	4.0E+06	

[1]Wing sweep of 45° [2]Wing sweep of 58°

Table H-1. Continued.

Flight	Time	MINF	Camber	ALPT	BETA	QINF	RNPU	CNWP
217[2]	11-5-22-500	1.220	0/2	8.44	0.34	616.2	4.0E+06	
217[2]	11-5-26-500	1.195	0/2	9.20	0.31	587.5	3.8E+06	
217[2]	11-7-27-500	1.185	2/1	5.52	0.34	573.8	3.8E+06	
218[2]	10-23-32-500	1.211	0/2	4.52	0.45	587.2	3.8E+06	
218[2]	10-23-35-000	1.213	0/2	3.57	0.45	588.8	3.8E+06	
218[2]	10-23-38-500	1.218	0/2	2.78	0.54	596.0	3.9E+06	
218[2]	10-23-43-500	1.228	0/2	6.60	0.43	620.2	4.0E+06	
218[2]	10-23-44-500	1.227	0/2	7.86	0.45	622.6	4.0E+06	
218[2]	10-23-45-000	1.226	0/2	8.42	0.45	622.9	4.0E+06	
218[2]	10-23-46-000	1.222	0/2	9.47	0.45	621.6	4.0E+06	
218[2]	10-23-47-000	1.216	0/2	10.51	0.48	615.9	4.0E+06	
218[2]	10-23-48-000	1.206	0/2	11.26	0.51	606.1	4.0E+06	
218[2]	10-26-14-000	1.214	2/1	5.12	0.37	599.3	3.9E+06	
218[2]	10-26-26-000	1.215	2/1	5.12	0.37	604.3	3.9E+06	
218[2]	10-26-29-500	1.217	1/2	3.55	0.37	607.7	4.0E+06	
218[2]	10-26-32-500	1.222	0/3	2.56	0.43	615.5	4.0E+06	
218[2]	10-26-36-500	1.235	1/3	3.80	0.31	641.9	4.2E+06	
218[2]	10-26-37-000	1.237	1/3	4.71	0.37	646.5	4.2E+06	
218[2]	10-26-37-500	1.238	1/2	5.82	0.37	649.7	4.2E+06	
218[2]	10-26-38-000	1.238	2/1	6.70	0.43	651.6	4.2E+06	
218[2]	10-26-38-500	1.237	3/0	7.54	0.45	653.3	4.2E+06	
218[2]	10-26-39-500	1.235	5/-1	8.70	0.43	655.6	4.2E+06	
218[2]	10-26-40-500	1.231	7/-1	9.74	0.43	654.0	4.2E+06	
218[2]	10-26-41-000	1.228	9/-1	10.14	0.34	651.8	4.2E+06	
218[2]	10-26-42-500	1.216	12/-1	11.03	0.34	639.0	4.2E+06	
218[2]	10-28-24-000	1.197	4/-1	7.55	0.51	565.8	3.7E+06	
218[2]	10-30-25-000	1.218	0/2	7.49	0.43	572.7	3.7E+06	
218[2]	10-30-33-000	1.220	0/2	8.31	0.37	575.5	3.7E+06	
222[2]	11-35-51-500	1.395	0/2	4.24	0.43	790.9	4.9E+06	
222[2]	11-36-0-000	1.395	0/2	3.56	0.45	789.7	4.9E+06	
222[2]	11-36-3-500	1.399	0/2	2.43	0.48	795.4	5.0E+06	
222[2]	11-36-6-000	1.403	0/2	2.48	0.48	805.4	5.0E+06	
222[2]	11-36-9-000	1.408	0/2	3.65	0.45	822.3	5.1E+06	
222[2]	11-36-10-500	1.410	0/2	5.41	0.45	832.6	5.2E+06	0.1637
222[2]	11-36-13-000	1.405	0/2	7.58	0.45	836.9	5.2E+06	
222[2]	11-36-14-000	1.400	0/2	8.35	0.45	833.5	5.2E+06	

[1]Wing sweep of 45° [2]Wing sweep of 58°

Table H-1. Concluded.

Flight	Time	MINF	Camber	ALPT	BETA	QINF	RNPU	CNWP
222[2]	11-36-16-000	1.385	0/2	8.95	0.40	816.0	5.1E+06	
222[2]	11-42-6-000	1.403	1/2	4.20	0.40	786.1	4.9E+06	
222[2]	11-42-18-000	1.404	1/2	3.93	0.43	785.5	4.9E+06	
222[2]	11-42-26-500	1.406	0/3	3.51	0.43	788.3	4.9E+06	
222[2]	11-42-29-500	1.409	0/3	2.38	0.45	792.6	4.9E+06	
222[2]	11-42-30-500	1.411	0/3	2.38	0.45	795.2	4.9E+06	
222[2]	11-42-32-500	1.411	0/3	4.74	0.40	800.8	5.0E+06	
222[2]	11-42-34-000	1.408	1/1	6.44	0.43	802.3	5.0E+06	
222[2]	11-42-35-000	1.405	2/0	7.35	0.43	800.8	5.0E+06	
222[2]	11-42-36-500	1.397	3/-1	8.55	0.45	793.3	4.9E+06	
222[2]	11-42-38-000	1.387	5/-1	9.32	0.45	779.3	4.9E+06	
222[2]	11-42-40-000	1.369	5/-1	9.50	0.48	750.7	4.7E+06	

[1]Wing sweep of 45° [2]Wing sweep of 58°

Table H-2. Listing of data.

Flight 201, Wing sweep = 26°, Time = 8-49-1-500, MINF = 0.944, Camber = 0/2, ALPT = 5.05, BETA = 0.14, QINF = 383.4, RNPU = 2.8E+06, CNWP = 0.3340

η = 0.93		0.76		0.59		0.40	
			Upper Surface				
x/c	CP	*x/c*	CP	*x/c*	CP	*x/c*	CP
0.020	-0.131	0.000	0.925	0.000	0.865**	0.010	-0.553
0.060	-0.313	0.020	-0.321	0.020	-0.167	0.020	-0.652**
0.110	-0.347	0.040	-0.209	0.060	0.097**	0.060	-0.626**
0.200	-0.463	0.060	-0.388	0.090	-0.468	0.110	-0.628
0.230	-0.406	0.090	-0.404	0.110	-0.571	0.140	-0.660
0.400	-0.470	0.130	-0.430	0.130	-0.486	0.190	-1.603**
0.490	-0.449	0.150	-0.466	0.150	-0.507	0.250	-0.671
0.590	-0.469	0.200	-0.399	0.210	-0.524	0.400	-0.521
0.630	-0.450	0.250	-0.522	0.250	-0.544	0.490	-0.534
0.700	-0.524	0.260	-0.501	0.340	-0.605	0.580	-0.371
0.750	-0.623	0.280	-0.535	0.370	-0.628	0.650	-0.413
0.810	-0.573	0.290	-0.535	0.400	-0.627	0.700	-0.393
0.840	-0.609	0.310	-0.516	0.410	-0.610	0.750	-0.460
0.900	-0.029	0.320	-0.520	0.430	-0.623	0.800	-0.606
0.960	0.007	0.340	-0.518	0.440	-0.604	0.830	-0.587
		0.350	-0.340**	0.460	-0.440	0.900	-0.780
		0.370	-0.528	0.490	-0.596	0.960	-0.274**
		0.380	-0.581	0.500	-0.650		
		0.400	-0.510	0.520	-0.618		
		0.410	-0.562	0.540	-0.606		
		0.430	-0.537	0.550	-0.583		
		0.440	-0.506	0.580	-0.493		
		0.460	-0.586	0.600	-0.484		
		0.470	-0.552	0.610	-0.488		
		0.490	-0.560	0.650	-0.099**		
		0.500	-0.558	0.700	-0.598		
		0.520	-0.551	0.750	-0.604		
		0.530	-0.543	0.820	-0.376		
		0.550	-0.566	0.890	-0.293		
		0.560	-0.581	0.900	-0.198		
		0.580	-0.564	0.960	-0.100		
		0.590	-0.595				
		0.600	-0.622				
		0.640	-0.648				
		0.700	-0.692				
		0.750	-0.176**				
		0.820	-0.457				
		0.870	-0.316				
		0.930	-0.112				
		0.960	-0.107				
			Lower Surface				
0.020	-0.366	0.020	-0.173	0.020	0.007	0.020	0.432
0.110	-0.391	0.060	-0.007	0.060	0.088	0.060	-0.817
0.230	-0.419	0.090	-0.107	0.090	0.006	0.110	-0.039
0.400	-0.308	0.120	-0.185**	0.120	-0.258	0.250	-0.270
0.490	-0.319	0.200	-0.275	0.200	-0.220	0.400	-0.174
0.630	1.775**	0.260	-0.290	0.250	-0.299	0.490	-0.323
0.750	-0.262	0.400	-0.328	0.400	-0.284	0.580	-0.460
0.850	0.052	0.490	-0.413	0.490	-0.198	0.650	-0.654
0.900	0.168	0.580	-0.499	0.580	-0.448	0.750	-0.385
0.960	0.147	0.640	-0.588	0.650	-0.191	0.830	-0.107
		0.750	-0.140	0.750	-0.164**	0.900	0.074
		0.870	0.025	0.890	0.079	0.960	0.165
		0.930	0.143	0.930	0.102		
		0.960	0.124	0.960	0.289		
CN =	0.155		0.237		0.319		0.256

Table H-2. Continued.

Flight 201, Wing sweep = 26°, Time = 8-49-6-500, MINF = 0.943, Camber = 0/2, ALPT = 5.07, BETA = 0.14, QINF = 383.7, RNPU = 2.8E+06, CNWP = 0.3326

η = 0.93		0.76		0.59		0.40	
			Upper Surface				
x/c	CP	*x/c*	CP	*x/c*	CP	*x/c*	CP
0.020	-0.127	0.000	0.915	0.000	0.871**	0.010	-0.568
0.060	-0.306	0.020	-0.380	0.020	-0.176	0.020	-0.650**
0.110	-0.332	0.040	-0.190	0.060	0.058**	0.060	-0.613**
0.200	-0.466	0.060	-0.403	0.090	-0.490	0.110	-0.635
0.230	-0.363	0.090	-0.412	0.110	-0.571	0.140	-0.663
0.400	-0.467	0.130	-0.437	0.130	-0.489	0.190	-1.605**
0.490	-0.461	0.150	-0.462	0.150	-0.521	0.250	-0.679
0.590	-0.480	0.200	-0.404	0.210	-0.531	0.400	-0.541
0.630	-0.447	0.250	-0.536	0.250	-0.553	0.490	-0.522
0.700	-0.518	0.260	-0.510	0.340	-0.608	0.580	-0.377
0.750	-0.595	0.280	-0.543	0.370	-0.624	0.650	-0.424
0.810	-0.560	0.290	-0.543	0.400	-0.606	0.700	-0.396
0.840	-0.571	0.310	-0.521	0.410	-0.618	0.750	-0.474
0.900	-0.028	0.320	-0.520	0.430	-0.614	0.800	-0.615
0.960	0.009	0.340	-0.521	0.440	-0.602	0.830	-0.583
		0.350	-0.343**	0.460	-0.446	0.900	-0.787
		0.370	-0.540	0.490	-0.581	0.960	-0.279**
		0.380	-0.585	0.500	-0.645		
		0.400	-0.515	0.520	-0.607		
		0.410	-0.566	0.540	-0.620		
		0.430	-0.542	0.550	-0.569		
		0.440	-0.492	0.580	-0.494		
		0.460	-0.580	0.600	-0.489		
		0.470	-0.556	0.610	-0.502		
		0.490	-0.562	0.650	-0.103**		
		0.500	-0.555	0.700	-0.598		
		0.520	-0.553	0.750	-0.581		
		0.530	-0.551	0.820	-0.374		
		0.550	-0.580	0.890	-0.308		
		0.560	-0.584	0.900	-0.205		
		0.580	-0.561	0.960	-0.106		
		0.590	-0.613				
		0.600	-0.625				
		0.640	-0.655				
		0.700	-0.686				
		0.750	-0.188**				
		0.820	-0.460				
		0.870	-0.328				
		0.930	-0.116				
		0.960	-0.099				
			Lower Surface				
0.020	-0.351	0.020	-0.213	0.020	-0.007	0.020	0.410
0.110	-0.394	0.060	-0.040	0.060	0.074	0.060	-0.825
0.230	-0.427	0.090	-0.124	0.090	0.003	0.110	-0.070
0.400	-0.338	0.120	-0.199**	0.120	-0.261	0.250	-0.289
0.490	-0.313	0.200	-0.304	0.200	-0.228	0.400	-0.177
0.630	1.770**	0.260	-0.311	0.250	-0.308	0.490	-0.334
0.750	-0.234	0.400	-0.351	0.400	-0.291	0.580	-0.474
0.850	0.049	0.490	-0.430	0.490	-0.212	0.650	-0.674
0.900	0.168	0.580	-0.510	0.580	-0.463	0.750	-0.388
0.960	0.147	0.640	-0.593	0.650	-0.194	0.830	-0.121
		0.750	-0.137	0.750	-0.167**	0.900	0.060
		0.870	0.032	0.890	0.081	0.960	0.154
		0.930	0.131	0.930	0.093		
		0.960	0.115	0.960	0.262		
CN =	0.151		0.228		0.315		0.249

Table H-2. Continued.

Flight 221, Wing sweep = 26°, Time = 14-17-53-500, MINF = 0.949, Camber = 0/2, ALPT = 6.09, BETA = 0.08, QINF = 298.4, RNPU = 2.2E+06, CNWP = 0.2762

η = 0.93		0.76		0.59		0.40	
			Upper Surface				
x/c	CP	*x/c*	CP	*x/c*	CP	*x/c*	CP
0.020	-0.280	0.000	0.880	0.000	0.951**	0.010	-0.618
0.060	-0.375	0.020	-0.443	0.020	-0.487	0.020	-0.735
0.110	-0.435	0.040	-0.425	0.060	-3.041**	0.060	-0.782
0.200	-0.483	0.060	-0.537	0.090	-0.592	0.110	-0.710
0.230	-0.421	0.090	-0.537	0.110	-0.643	0.140	-0.753
0.400	-0.512	0.130	-0.535	0.130	-0.542	0.190	-1.587**
0.490	-0.488	0.150	-0.559	0.150	-0.617	0.250	-0.747
0.590	-0.540	0.200	-0.464	0.210	-0.581	0.400	-0.570
0.630	-0.474	0.250	-0.598	0.250	-0.596	0.490	-0.592
0.700	-0.502	0.260	-0.532	0.340	-0.648	0.580	-0.478
0.750	-0.694	0.280	-0.583	0.370	-0.649	0.650	-0.436
0.810	-0.700	0.290	-0.601	0.400	-0.685	0.700	-0.440
0.840	-0.677	0.310	-0.597	0.410	-2.588**	0.750	-0.531
0.900	-0.170	0.320	-0.588	0.430	-0.672	0.800	-0.672
0.960	-0.189	0.340	-0.575	0.440	-0.632	0.830	-0.603
		0.350	-0.408**	0.460	-0.674	0.900	-0.803
		0.370	-0.571	0.490	-0.583	0.960	-0.449
		0.380	-0.628	0.500	-0.717		
		0.400	-0.514	0.520	-0.652		
		0.410	-0.623	0.540	-0.674		
		0.430	-0.600	0.550	-0.692		
		0.440	-0.543	0.580	-0.695		
		0.460	-0.658	0.600	-0.613		
		0.470	-0.603	0.610	-0.565		
		0.490	-0.624	0.650	0.491**		
		0.500	-0.621	0.700	-0.646		
		0.520	-0.637	0.750	-0.734		
		0.530	-0.610	0.820	-0.631		
		0.550	-0.673	0.890	-0.642		
		0.560	-0.624	0.900	-0.438		
		0.580	-0.627	0.960	-0.251		
		0.590	-0.667				
		0.600	-0.702				
		0.640	-0.676				
		0.700	-0.697				
		0.750	-0.232**				
		0.820	-0.511				
		0.870	-0.482				
		0.930	-0.277				
		0.960	-0.255				
			Lower Surface				
0.020	-0.326	0.020	-0.070	0.020	0.081	0.020	0.472
0.110	-0.359	0.060	-0.027	0.060	0.109	0.060	0.978**
0.230	-0.370	0.090	-0.097	0.090	1.522**	0.110	-0.042
0.400	-0.294	0.120	-0.210	0.120	-0.342	0.250	-0.179
0.490	-0.330	0.200	-0.158	0.200	-0.171	0.400	-0.237
0.630	2.286**	0.260	-0.314	0.250	-0.251	0.490	-0.376
0.750	-0.579	0.400	-0.311	0.400	-0.277	0.580	-0.462
0.850	-0.083	0.490	-0.430	0.490	-0.253	0.650	-0.675
0.900	0.051	0.580	-0.495	0.580	-0.451	0.750	-0.320
0.960	0.041	0.640	-0.548	0.650	-0.251	0.830	-0.120
		0.750	-0.203	0.750	-0.143	0.900	0.038
		0.870	-0.088	0.890	0.017	0.960	0.096
		0.930	0.027	0.930	0.043		
		0.960	0.002	0.960	-2.222**		
CN =	0.146		0.292		0.392		0.390

Table H-2. Continued.

Flight 221, Wing sweep = 26°, Time = 14-18-4-000, MINF = 0.952, Camber = 0/2, ALPT = 7.06, BETA = -0.24, QINF = 301.5, RNPU = 2.2E+06, CNWP = 0.3371

η = 0.93		0.76		0.59		0.40	
			Upper Surface				
x/c	CP	*x/c*	CP	*x/c*	CP	*x/c*	CP
0.020	-0.472	0.000	0.862	0.000	0.839**	0.010	-0.783
0.060	-0.498	0.020	-0.707	0.020	-0.559	0.020	-0.774
0.110	-0.493	0.040	-0.502	0.060	-2.976**	0.060	-0.799
0.200	-0.546	0.060	-0.614	0.090	-0.695	0.110	-0.766
0.230	-0.477	0.090	-0.590	0.110	-0.714	0.140	-0.786
0.400	-0.549	0.130	-0.597	0.130	-0.612	0.190	-1.576**
0.490	-0.495	0.150	-0.624	0.150	-0.683	0.250	-0.815
0.590	-0.563	0.200	-0.517	0.210	-0.621	0.400	-0.611
0.630	-0.504	0.250	-0.648	0.250	-0.653	0.490	-0.600
0.700	-0.539	0.260	-0.579	0.340	-0.706	0.580	-0.531
0.750	-0.715	0.280	-0.651	0.370	-0.694	0.650	-0.477
0.810	-0.719	0.290	-0.643	0.400	-0.742	0.700	-0.456
0.840	-0.682	0.310	-0.647	0.410	-2.567**	0.750	-0.545
0.900	-0.265	0.320	-0.640	0.430	-0.722	0.800	-0.669
0.960	-0.291	0.340	-0.613	0.440	-0.682	0.830	-0.629
		0.350	-0.435**	0.460	-0.721	0.900	-0.818
		0.370	-0.621	0.490	-0.694	0.960	-0.523
		0.380	-0.695	0.500	-0.737		
		0.400	-0.575	0.520	-0.667		
		0.410	-0.667	0.540	-0.713		
		0.430	-0.645	0.550	-0.738		
		0.440	-0.585	0.580	-0.745		
		0.460	-0.689	0.600	-0.671		
		0.470	-0.640	0.610	-0.671		
		0.490	-0.666	0.650	0.352**		
		0.500	-0.685	0.700	-0.691		
		0.520	-0.690	0.750	-0.761		
		0.530	-0.662	0.820	-0.671		
		0.550	-0.716	0.890	-0.780		
		0.560	-0.665	0.900	-0.728		
		0.580	-0.685	0.960	-0.337		
		0.590	-0.722				
		0.600	-0.758				
		0.640	-0.723				
		0.700	-0.742				
		0.750	-0.235**				
		0.820	-0.578				
		0.870	-0.580				
		0.930	-0.382				
		0.960	-0.333				
			Lower Surface				
0.020	-0.225	0.020	-0.259	0.020	0.152	0.020	0.509
0.110	-0.321	0.060	0.050	0.060	0.170	0.060	0.963**
0.230	-0.360	0.090	-0.046	0.090	1.502**	0.110	0.029
0.400	-0.266	0.120	-0.100	0.120	-0.277	0.250	-0.154
0.490	-0.317	0.200	-0.129	0.200	-0.151	0.400	-0.203
0.630	2.257**	0.260	-0.287	0.250	-0.196	0.490	-0.337
0.750	-0.563	0.400	-0.283	0.400	-0.225	0.580	-0.412
0.850	-0.114	0.490	-0.404	0.490	-0.248	0.650	-0.651
0.900	0.020	0.580	-0.457	0.580	-0.429	0.750	-0.284
0.960	-0.022	0.640	-0.518	0.650	-0.246	0.830	-0.078
		0.750	-0.185	0.750	-0.146	0.900	0.110
		0.870	-0.023	0.890	0.033	0.960	0.134
		0.930	0.029	0.930	0.045		
		0.960	-0.018	0.960	-2.165**		
CN =	0.200		0.391		0.488		0.466

Table H-2. Continued.

Flight 221, Wing sweep = 26°, Time = 14-18-7-000, MINF = 0.953, Camber = 0/2, ALPT = 8.08, BETA = -0.67, QINF = 302.1, RNPU = 2.2E+06, CNWP = 0.3593

η = 0.93		0.76		0.59		0.40	
			Upper Surface				
x/c	CP	*x/c*	CP	*x/c*	CP	*x/c*	CP
0.020	-0.567	0.000	0.848	0.000	0.892**	0.010	-0.789
0.060	-0.549	0.020	-0.805	0.020	-0.639	0.020	-0.873
0.110	-0.570	0.040	-0.545	0.060	-3.056**	0.060	-0.882
0.200	-0.594	0.060	-0.690	0.090	-0.721	0.110	-0.844
0.230	-0.517	0.090	-0.690	0.110	-0.762	0.140	-0.859
0.400	-0.609	0.130	-0.677	0.130	-0.668	0.190	-1.574**
0.490	-0.546	0.150	-0.696	0.150	-0.758	0.250	-0.841
0.590	-0.597	0.200	-0.622	0.210	-0.685	0.400	-0.645
0.630	-0.520	0.250	-0.711	0.250	-0.714	0.490	-0.614
0.700	-0.570	0.260	-0.625	0.340	-0.766	0.580	-0.537
0.750	-0.731	0.280	-0.680	0.370	-0.764	0.650	-0.503
0.810	-0.732	0.290	-0.680	0.400	-0.808	0.700	-0.498
0.840	-0.697	0.310	-0.695	0.410	-2.562**	0.750	-0.574
0.900	-0.378	0.320	-0.682	0.430	-0.789	0.800	-0.690
0.960	-0.372	0.340	-0.667	0.440	-0.729	0.830	-0.641
		0.350	-0.432**	0.460	-0.782	0.900	-0.830
		0.370	-0.657	0.490	-0.687	0.960	-0.540
		0.380	-0.745	0.500	-0.802		
		0.400	-0.645	0.520	-0.751		
		0.410	-0.740	0.540	-0.767		
		0.430	-0.693	0.550	-0.784		
		0.440	-0.628	0.580	-0.782		
		0.460	-0.748	0.600	-0.716		
		0.470	-0.696	0.610	-0.709		
		0.490	-0.724	0.650	0.223**		
		0.500	-0.740	0.700	-0.815		
		0.520	-0.713	0.750	-0.837		
		0.530	-0.700	0.820	-0.702		
		0.550	-0.770	0.890	-0.801		
		0.560	-0.694	0.900	-0.877		
		0.580	-0.710	0.960	-0.393		
		0.590	-0.760				
		0.600	-0.772				
		0.640	-0.763				
		0.700	-0.785				
		0.750	-0.222**				
		0.820	-0.616				
		0.870	-0.598				
		0.930	-0.422				
		0.960	-0.414				
			Lower Surface				
0.020	-0.156	0.020	-0.241	0.020	0.243	0.020	0.600
0.110	-0.295	0.060	0.116	0.060	0.221	0.060	0.974**
0.230	-0.301	0.090	0.014	0.090	1.497**	0.110	0.068
0.400	-0.238	0.120	-0.051	0.120	-0.236	0.250	-0.117
0.490	-0.310	0.200	-0.083	0.200	-0.122	0.400	-0.161
0.630	2.251**	0.260	-0.230	0.250	-0.131	0.490	-0.315
0.750	-0.544	0.400	-0.254	0.400	-0.221	0.580	-0.388
0.850	-0.115	0.490	-0.397	0.490	-0.242	0.650	-0.625
0.900	-0.009	0.580	-0.435	0.580	-0.408	0.750	-0.214
0.960	-0.058	0.640	-0.510	0.650	-0.240	0.830	-0.025
		0.750	-0.118	0.750	-0.125	0.900	0.180
		0.870	0.013	0.890	0.057	0.960	0.138
		0.930	0.035	0.930	0.080		
		0.960	-0.015	0.960	-2.131**		
CN =	0.266		0.477		0.568		0.535

Table H-2. Continued.

Flight 221, Wing sweep = 26°, Time = 14-18-10-000, MINF = 0.949, Camber = 0/2, ALPT = 9.25, BETA = -0.76, QINF = 299.8, RNPU = 2.2E+06, CNWP = 0.4154

η = 0.93		0.76		0.59		0.40	
			Upper Surface				
x/c	CP	*x/c*	CP	*x/c*	CP	*x/c*	CP
0.020	-0.638	0.000	0.789	0.000	0.717**	0.010	-0.927
0.060	-0.670	0.020	-0.929	0.020	-0.749	0.020	-0.969
0.110	-0.687	0.040	-0.680	0.060	-3.128**	0.060	-1.006
0.200	-0.672	0.060	-0.791	0.090	-0.827	0.110	-0.959
0.230	-0.581	0.090	-0.770	0.110	-0.862	0.140	-0.976
0.400	-0.653	0.130	-0.761	0.130	-0.771	0.190	-1.587**
0.490	-0.617	0.150	-0.789	0.150	-0.844	0.250	-0.974
0.590	-0.653	0.200	-0.711	0.210	-0.779	0.400	-0.720
0.630	-0.580	0.250	-0.789	0.250	-0.788	0.490	-0.627
0.700	-0.605	0.260	-0.711	0.340	-0.833	0.580	-0.600
0.750	-0.766	0.280	-0.767	0.370	-0.835	0.650	-0.564
0.810	-0.774	0.290	-0.767	0.400	-0.881	0.700	-0.570
0.840	-0.747	0.310	-0.776	0.410	-2.583**	0.750	-0.630
0.900	-0.545	0.320	-0.767	0.430	-0.856	0.800	-0.723
0.960	-0.492	0.340	-0.754	0.440	-0.823	0.830	-0.678
		0.350	-0.458**	0.460	-0.853	0.900	-0.858
		0.370	-0.743	0.490	-0.769	0.960	-0.582
		0.380	-0.804	0.500	-0.879		
		0.400	-0.686	0.520	-0.829		
		0.410	-0.797	0.540	-0.839		
		0.430	-0.771	0.550	-0.862		
		0.440	-0.720	0.580	-0.880		
		0.460	-0.835	0.600	-0.804		
		0.470	-0.765	0.610	-0.795		
		0.490	-0.792	0.650	0.134**		
		0.500	-0.813	0.700	-0.943		
		0.520	-0.805	0.750	-1.000		
		0.530	-0.790	0.820	-0.773		
		0.550	-0.810	0.890	-0.801		
		0.560	-0.778	0.900	-0.572		
		0.580	-0.795	0.960	-0.417		
		0.590	-0.836				
		0.600	-0.858				
		0.640	-0.834				
		0.700	-0.853				
		0.750	-0.158**				
		0.820	-0.587				
		0.870	-0.508				
		0.930	-0.460				
		0.960	-0.455				
			Lower Surface				
0.020	-0.073	0.020	-0.215	0.020	0.329	0.020	0.669
0.110	-0.196	0.060	0.187	0.060	0.290	0.060	0.995**
0.230	-0.236	0.090	0.069	0.090	1.507**	0.110	0.102
0.400	-0.211	0.120	0.006	0.120	-0.181	0.250	-0.064
0.490	-0.283	0.200	-0.037	0.200	-0.067	0.400	-0.122
0.630	2.267**	0.260	-0.203	0.250	-0.074	0.490	-0.281
0.750	-0.158	0.400	-0.215	0.400	-0.174	0.580	-0.377
0.850	-0.064	0.490	-0.356	0.490	-0.178	0.650	-0.608
0.900	0.000	0.580	-0.409	0.580	-0.375	0.750	-0.126
0.960	-0.103	0.640	-0.470	0.650	-0.177	0.830	0.101
		0.750	0.007	0.750	-0.120	0.900	0.240
		0.870	0.082	0.890	0.129	0.960	0.141
		0.930	0.057	0.930	0.117		
		0.960	-0.009	0.960	-2.153**		
CN =	0.436		0.585		0.683		0.652

Table H-2. Continued.

Flight 221, Wing sweep = 26°, Time = 14-18-12-000, MINF = 0.944, Camber = 0/2, ALPT = 10.28, BETA = -0.85, QINF = 296.7, RNPU = 2.2E+06, CNWP = 0.4688

η = 0.93		0.76		0.59		0.40	
			Upper Surface				
x/c	CP	*x/c*	CP	*x/c*	CP	*x/c*	CP
0.020	-0.727	0.000	0.748	0.000	0.703**	0.010	-1.029
0.060	-0.739	0.020	-1.021	0.020	-0.831	0.020	-1.029
0.110	-0.750	0.040	-0.757	0.060	-3.202**	0.060	-1.087
0.200	-0.729	0.060	-0.832	0.090	-0.917	0.110	-1.034
0.230	-0.685	0.090	-0.851	0.110	-0.939	0.140	-1.045
0.400	-0.699	0.130	-0.844	0.130	-0.843	0.190	-1.604**
0.490	-0.654	0.150	-0.861	0.150	-0.949	0.250	-1.028
0.590	-0.700	0.200	-0.779	0.210	-0.848	0.400	-0.769
0.630	-0.626	0.250	-0.862	0.250	-0.856	0.490	-0.677
0.700	-0.643	0.260	-0.781	0.340	-0.889	0.580	-0.645
0.750	-0.819	0.280	-0.831	0.370	-0.901	0.650	-0.607
0.810	-0.804	0.290	-0.840	0.400	-0.928	0.700	-0.614
0.840	-0.786	0.310	-0.838	0.410	-2.611**	0.750	-0.674
0.900	-0.648	0.320	-0.823	0.430	-0.927	0.800	-0.751
0.960	-0.537	0.340	-0.810	0.440	-0.881	0.830	-0.708
		0.350	-0.454**	0.460	-0.918	0.900	-0.890
		0.370	-0.804	0.490	-0.831	0.960	-0.636
		0.380	-0.877	0.500	-0.931		
		0.400	-0.768	0.520	-0.891		
		0.410	-0.860	0.540	-0.888		
		0.430	-0.824	0.550	-0.925		
		0.440	-0.782	0.580	-0.945		
		0.460	-0.889	0.600	-0.859		
		0.470	-0.831	0.610	-0.857		
		0.490	-0.854	0.650	0.044**		
		0.500	-0.863	0.700	-0.987		
		0.520	-0.870	0.750	-1.075		
		0.530	-0.845	0.820	-0.809		
		0.550	-0.887	0.890	-0.540		
		0.560	-0.834	0.900	-0.591		
		0.580	-0.857	0.960	-0.482		
		0.590	-0.903				
		0.600	-0.927				
		0.640	-0.892				
		0.700	-0.907				
		0.750	-0.113**				
		0.820	-0.473				
		0.870	-0.503				
		0.930	-0.488				
		0.960	-0.486				
			Lower Surface				
0.020	-0.029	0.020	-0.211	0.020	0.401	0.020	0.716
0.110	-0.150	0.060	0.233	0.060	0.373	0.060	1.020**
0.230	-0.209	0.090	0.113	0.090	1.522**	0.110	0.179
0.400	-0.165	0.120	0.050	0.120	-0.143	0.250	-0.039
0.490	-0.272	0.200	-0.005	0.200	-0.027	0.400	-0.099
0.630	2.289**	0.260	-0.170	0.250	-0.043	0.490	-0.263
0.750	-0.130	0.400	-0.192	0.400	-0.132	0.580	-0.346
0.850	-0.101	0.490	-0.330	0.490	-0.129	0.650	-0.597
0.900	-0.003	0.580	-0.391	0.580	-0.358	0.750	-0.027
0.960	-0.115	0.640	-0.132	0.650	-0.136	0.830	0.197
		0.750	0.079	0.750	-0.107	0.900	0.263
		0.870	0.106	0.890	0.184	0.960	0.151
		0.930	0.060	0.930	0.125		
		0.960	-0.013	0.960	-2.170**		
CN =	0.513		0.684		0.769		0.741

Table H-2. Continued.

Flight 229, Wing sweep = 26°, Time = 11-42-7-000, MINF = 0.950, Camber = 0/2, ALPT = 6.07, BETA = 0.28, QINF = 301.4, RNPU = 2.2E+06, CNWP = 0.2974

η = 0.93		0.76		0.59		0.40	
			Upper Surface				
x/c	CP	*x/c*	CP	*x/c*	CP	*x/c*	CP
0.020	-0.303	0.000	0.850	0.000	7.939**	0.010	-0.545
0.060	-0.400	0.020	-0.415	0.020	-0.492	0.020	-0.609
0.110	-0.426	0.040	-1.169**	0.060	-3.570**	0.060	-0.624
0.200	-0.449	0.060	-0.527	0.090	-0.597	0.110	-0.621
0.230	-0.375	0.090	-0.501	0.110	-0.677	0.140	-0.652
0.400	-0.454	0.130	-0.518	0.130	-0.503	0.190	-1.581**
0.490	-0.493	0.150	-0.580	0.150	-0.598	0.250	-0.666
0.590	-0.541	0.200	-0.460	0.210	-0.577	0.400	-0.588
0.630	-0.487	0.250	0.423**	0.250	-0.585	0.490	-0.539
0.700	-0.526	0.260	-0.535	0.340	-0.096**	0.580	-0.438
0.750	-0.679	0.280	0.686**	0.370	3.068**	0.650	-0.442
0.810	-0.645	0.290	0.396**	0.400	-0.667	0.700	-0.410
0.840	-0.636	0.310	-0.176**	0.410	2.912**	0.750	-0.492
0.900	-0.188	0.320	0.036**	0.430	-0.117**	0.800	-0.619
0.960	-0.147	0.340	0.239**	0.440	-0.149**	0.830	-0.565
		0.350	2.165**	0.460	-0.207**	0.900	-0.755
		0.370	0.052**	0.490	-0.625	0.960	-0.424
		0.380	-0.053**	0.500	-0.193**		
		0.400	-0.537	0.520	-0.066**		
		0.410	0.545**	0.540	-0.101**		
		0.430	0.422**	0.550	-0.272**		
		0.440	-0.551	0.580	-0.632		
		0.460	0.473**	0.600	-0.102**		
		0.470	0.992**	0.610	-0.069**		
		0.490	-0.617	0.650	6.341**		
		0.500	0.670**	0.700	-0.605		
		0.520	1.150**	0.750	-0.715		
		0.530	-0.610	0.820	-0.599		
		0.550	0.817**	0.890	-0.667		
		0.560	0.074**	0.900	-0.455		
		0.580	-0.616	0.960	-0.272		
		0.590	1.237**				
		0.600	-0.299**				
		0.640	-0.692				
		0.700	-0.660				
		0.750	-0.233**				
		0.820	-0.527				
		0.870	-0.269				
		0.930	-0.280				
		0.960	-0.255				
			Lower Surface				
0.020	-0.299	0.020	-0.270	0.020	0.084	0.020	0.476
0.110	-0.333	0.060	-0.015	0.060	0.137	0.060	4.598**
0.230	-0.350	0.090	-0.094	0.090	4.199**	0.110	0.003
0.400	-0.309	0.120	-0.196**	0.120	-0.317	0.250	-0.166
0.490	-0.322	0.200	-0.163	0.200	-0.152	0.400	-0.201
0.630	2.518**	0.260	-0.263	0.250	-0.215	0.490	-0.335
0.750	-0.584	0.400	-0.311	0.400	-0.289	0.580	-0.452
0.850	-0.135	0.490	-0.421	0.490	-0.239	0.650	-0.649
0.900	0.028	0.580	-0.493	0.580	-0.413	0.750	-0.318
0.960	-0.002	0.640	-0.523	0.650	-0.251	0.830	-0.106
		0.750	-0.175	0.750	-0.159	0.900	0.060
		0.870	-0.065	0.890	-0.001	0.960	0.114
		0.930	0.028	0.930	0.040		
		0.960	-0.005	0.960	2.360**		
CN =	0.122		0.283		0.392		0.363

Table H-2. Continued.

Flight 229, Wing sweep = 26°, Time = 11-42-16-500, MINF = 0.949, Camber = 0/2, ALPT = 6.10, BETA = 0.31, QINF = 300.4, RNPU = 2.2E+06, CNWP = 0.3195

η = 0.93		0.76		0.59		0.40	
			Upper Surface				
x/c	CP	*x/c*	CP	*x/c*	CP	*x/c*	CP
0.020	-0.314	0.000	0.845	0.000	7.966**	0.010	-0.568
0.060	-0.406	0.020	-0.435	0.020	-0.495	0.020	-0.653
0.110	-0.451	0.040	-1.184**	0.060	-3.583**	0.060	-0.584
0.200	-0.451	0.060	-0.545	0.090	-0.595	0.110	-0.643
0.230	-0.395	0.090	-0.512	0.110	-0.680	0.140	-0.673
0.400	-0.490	0.130	-0.527	0.130	-0.526	0.190	-1.587**
0.490	-0.506	0.150	-0.575	0.150	-0.601	0.250	-0.683
0.590	-0.536	0.200	-0.474	0.210	-0.573	0.400	-0.597
0.630	-0.493	0.250	0.452**	0.250	-0.588	0.490	-0.546
0.700	-0.532	0.260	-0.551	0.340	-0.096**	0.580	-0.367
0.750	-0.701	0.280	0.670**	0.370	3.070**	0.650	-0.429
0.810	-0.655	0.290	0.347**	0.400	-0.684	0.700	-0.417
0.840	-0.646	0.310	-0.244**	0.410	2.921**	0.750	-0.494
0.900	-0.182	0.320	-0.097**	0.430	-0.103**	0.800	-0.629
0.960	-0.148	0.340	0.042**	0.440	-0.150**	0.830	-0.568
		0.350	2.172**	0.460	-0.214**	0.900	-0.758
		0.370	-0.112**	0.490	-0.650	0.960	-0.402
		0.380	-0.114**	0.500	-0.179**		
		0.400	-0.528	0.520	-0.084**		
		0.410	0.250**	0.540	-0.130**		
		0.430	0.185**	0.550	-0.286**		
		0.440	-0.557	0.580	-0.634		
		0.460	0.292**	0.600	-0.115**		
		0.470	0.719**	0.610	-0.111**		
		0.490	-0.627	0.650	6.363**		
		0.500	0.435**	0.700	-0.696		
		0.520	0.987**	0.750	-0.718		
		0.530	-0.623	0.820	-0.606		
		0.550	0.708**	0.890	-0.538		
		0.560	-0.043**	0.900	-0.389		
		0.580	-0.626	0.960	-0.245		
		0.590	1.189**				
		0.600	-0.306**				
		0.640	-0.680				
		0.700	-0.670				
		0.750	-0.230**				
		0.820	-0.530				
		0.870	-0.260				
		0.930	-0.245				
		0.960	-0.252				
			Lower Surface				
0.020	-0.271	0.020	-0.079	0.020	0.053	0.020	0.492
0.110	-0.326	0.060	0.003	0.060	0.139	0.060	4.613**
0.230	-0.360	0.090	-0.098	0.090	4.213**	0.110	-0.017
0.400	-0.307	0.120	-0.197**	0.120	-0.319	0.250	-0.181
0.490	-0.331	0.200	-0.164	0.200	-0.139	0.400	-0.209
0.630	2.526**	0.260	-0.272	0.250	-0.224	0.490	-0.340
0.750	-0.579	0.400	-0.316	0.400	-0.291	0.580	-0.469
0.850	-0.105	0.490	-0.423	0.490	-0.233	0.650	-0.659
0.900	0.035	0.580	-0.495	0.580	-0.422	0.750	-0.295
0.960	0.020	0.640	-0.525	0.650	-0.260	0.830	-0.107
		0.750	-0.160	0.750	-0.145	0.900	0.054
		0.870	-0.056	0.890	0.021	0.960	0.117
		0.930	0.031	0.930	0.047		
		0.960	0.020	0.960	2.367**		
CN =	0.141		0.289		0.399		0.356

Table H-2. Continued.

Flight 229, Wing sweep = 26°, Time = 11-42-32-500, MINF = 0.949, Camber = 0/2, ALPT = 7.16, BETA = 0.02, QINF = 300.6, RNPU = 2.2E+06, CNWP = 0.3334

η = 0.93		0.76		0.59		0.40	
			Upper Surface				
x/c	CP	*x/c*	CP	*x/c*	CP	*x/c*	CP
0.020	-0.496	0.000	0.823	0.000	7.961**	0.010	-0.672
0.060	-0.509	0.020	-0.681	0.020	-0.583	0.020	-0.715
0.110	-0.554	0.040	-1.255**	0.060	-3.581**	0.060	-0.694
0.200	-0.526	0.060	-0.622	0.090	-0.698	0.110	-0.681
0.230	-0.340	0.090	-0.589	0.110	-0.752	0.140	-0.743
0.400	-0.542	0.130	-0.611	0.130	-0.578	0.190	-1.586**
0.490	-0.528	0.150	-0.664	0.150	-0.676	0.250	-0.766
0.590	-0.582	0.200	-0.547	0.210	-0.628	0.400	-0.659
0.630	-0.527	0.250	0.413**	0.250	-0.653	0.490	-0.569
0.700	-0.562	0.260	-0.605	0.340	-0.143**	0.580	-0.471
0.750	-0.708	0.280	0.624**	0.370	3.052**	0.650	-0.469
0.810	-0.676	0.290	0.208**	0.400	-0.735	0.700	-0.453
0.840	-0.668	0.310	-0.325**	0.410	2.919**	0.750	-0.515
0.900	-0.252	0.320	-0.192**	0.430	-0.180**	0.800	-0.642
0.960	-0.219	0.340	-0.064**	0.440	-0.214**	0.830	-0.589
		0.350	2.170**	0.460	-0.276**	0.900	-0.775
		0.370	-0.202**	0.490	-0.702	0.960	-0.458
		0.380	-0.151**	0.500	-0.231**		
		0.400	-0.615	0.520	-0.136**		
		0.410	0.093**	0.540	-0.171**		
		0.430	0.042**	0.550	-0.352**		
		0.440	-0.621	0.580	-0.651		
		0.460	0.158**	0.600	-0.188**		
		0.470	0.470**	0.610	-0.153**		
		0.490	-0.674	0.650	6.359**		
		0.500	0.225**	0.700	-0.739		
		0.520	0.788**	0.750	-0.769		
		0.530	-0.676	0.820	-0.660		
		0.550	0.522**	0.890	-0.633		
		0.560	-0.127**	0.900	-0.452		
		0.580	-0.672	0.960	-0.290		
		0.590	1.165**				
		0.600	-0.390**				
		0.640	-0.736				
		0.700	-0.709				
		0.750	-0.219**				
		0.820	-0.555				
		0.870	-0.256				
		0.930	-0.329				
		0.960	-0.314				
			Lower Surface				
0.020	-0.191	0.020	-0.156	0.020	0.162	0.020	0.536
0.110	-0.293	0.060	0.060	0.060	0.165	0.060	4.610**
0.230	-0.340	0.090	-0.048	0.090	4.210**	0.110	0.084
0.400	-0.344	0.120	-0.108**	0.120	-0.258	0.250	-0.151
0.490	-0.286	0.200	-0.131	0.200	-0.115	0.400	-0.180
0.630	2.525**	0.260	-0.250	0.250	-0.162	0.490	-0.314
0.750	-0.544	0.400	-0.282	0.400	-0.251	0.580	-0.404
0.850	-0.132	0.490	-0.404	0.490	-0.225	0.650	-0.643
0.900	0.006	0.580	-0.468	0.580	-0.400	0.750	-0.257
0.960	-0.029	0.640	-0.502	0.650	-0.238	0.830	-0.056
		0.750	-0.127	0.750	-0.130	0.900	0.126
		0.870	-0.001	0.890	0.042	0.960	0.140
		0.930	0.049	0.930	0.055		
		0.960	0.017	0.960	2.366**		
CN =	0.187		0.380		0.479		0.454

Table H-2. Continued.

Flight 229, Wing sweep = 26°, Time = 11-42-54-000, MINF = 0.945, Camber = 0/2, ALPT = 8.10, BETA = -0.30, QINF = 298.5, RNPU = 2.2E+06, CNWP = 0.3625

η = 0.93		0.76		0.59		0.40	
			Upper Surface				
x/c	CP	*x/c*	CP	*x/c*	CP	*x/c*	CP
0.020	-0.581	0.000	0.797	0.000	8.015**	0.010	-0.732
0.060	-0.640	0.020	-0.690	0.020	-0.668	0.020	-0.810
0.110	-0.648	0.040	-1.333**	0.060	-4.071**	0.060	-0.773
0.200	-0.591	0.060	-0.705	0.090	-0.741	0.110	-0.775
0.230	-0.514	0.090	-0.682	0.110	-0.816	0.140	-0.815
0.400	-0.584	0.130	-0.654	0.130	-0.666	0.190	-1.598**
0.490	-0.587	0.150	-0.739	0.150	-0.759	0.250	-0.841
0.590	-0.602	0.200	-0.644	0.210	-0.702	0.400	-0.699
0.630	-0.567	0.250	0.021**	0.250	-0.723	0.490	-0.606
0.700	-0.582	0.260	-0.678	0.340	-0.192**	0.580	-0.533
0.750	-0.734	0.280	0.143**	0.370	3.055**	0.650	-0.524
0.810	-0.724	0.290	-0.213**	0.400	-0.822	0.700	-0.483
0.840	-0.680	0.310	-0.396**	0.410	2.939**	0.750	-0.564
0.900	-0.295	0.320	-0.351**	0.430	-0.198**	0.800	-0.674
0.960	-0.256	0.340	-0.256**	0.440	-0.244**	0.830	-0.630
		0.350	2.185**	0.460	-0.304**	0.900	-0.803
		0.370	-0.355**	0.490	-0.761	0.960	-0.432
		0.380	-0.147**	0.500	-0.282**		
		0.400	-0.683	0.520	-0.158**		
		0.410	-0.258**	0.540	-0.216**		
		0.430	-0.220**	0.550	-0.393**		
		0.440	-0.688	0.580	-0.764		
		0.460	-0.169**	0.600	-0.225**		
		0.470	-0.095**	0.610	-0.210**		
		0.490	-0.744	0.650	6.402**		
		0.500	-0.305**	0.700	-0.855		
		0.520	-0.088**	0.750	-0.927		
		0.530	-0.741	0.820	-0.709		
		0.550	-0.245**	0.890	-0.434		
		0.560	-0.211**	0.900	-0.382		
		0.580	-0.742	0.960	-0.310		
		0.590	0.497**				
		0.600	-0.415**				
		0.640	-0.799				
		0.700	-0.781				
		0.750	-0.188**				
		0.820	-0.511				
		0.870	-0.236				
		0.930	-0.358				
		0.960	-0.339				
			Lower Surface				
0.020	-0.148	0.020	0.124	0.020	0.271	0.020	0.624
0.110	-0.241	0.060	0.123	0.060	0.247	0.060	4.641**
0.230	-0.275	0.090	0.028	0.090	4.238**	0.110	0.139
0.400	-0.264	0.120	-0.037**	0.120	-0.220	0.250	-0.101
0.490	-0.274	0.200	-0.081	0.200	-0.075	0.400	-0.138
0.630	2.541**	0.260	-0.216	0.250	-0.105	0.490	-0.279
0.750	-0.275	0.400	-0.266	0.400	-0.228	0.580	-0.393
0.850	-0.095	0.490	-0.385	0.490	-0.183	0.650	-0.619
0.900	-0.007	0.580	-0.438	0.580	-0.374	0.750	-0.172
0.960	-0.061	0.640	-0.480	0.650	-0.204	0.830	0.017
		0.750	-0.051	0.750	-0.132	0.900	0.201
		0.870	0.060	0.890	0.071	0.960	0.150
		0.930	0.064	0.930	0.084		
		0.960	0.024	0.960	2.382**		
CN =	0.326		0.470		0.572		0.548

Table H-2. Continued.

Flight 229, Wing sweep = 26°, Time = 11-42-59-500, MINF = 0.948, Camber = 0/2, ALPT = 9.14, BETA = -0.30, QINF = 302.9, RNPU = 2.2E+06, CNWP = 0.4088

η = 0.93		0.76		0.59		0.40	
			Upper Surface				
x/c	CP	*x/c*	CP	*x/c*	CP	*x/c*	CP
0.020	-0.645	0.000	0.782	0.000	7.882**	0.010	-0.826
0.060	-0.673	0.020	-0.873	0.020	-0.716	0.020	-0.847
0.110	-0.636	0.040	-1.410**	0.060	-4.027**	0.060	-0.842
0.200	-0.634	0.060	-0.743	0.090	-0.820	0.110	-0.862
0.230	-0.675	0.090	-0.751	0.110	-0.880	0.140	-0.901
0.400	-0.599	0.130	-0.753	0.130	-0.728	0.190	-1.591**
0.490	-0.623	0.150	-0.791	0.150	-0.801	0.250	-0.914
0.590	-0.630	0.200	-0.700	0.210	-0.758	0.400	-0.759
0.630	-0.591	0.250	0.138**	0.250	-0.786	0.490	-0.602
0.700	-0.616	0.260	-0.737	0.340	-0.276**	0.580	-0.568
0.750	-0.752	0.280	0.334**	0.370	2.991**	0.650	-0.538
0.810	-0.714	0.290	-0.188**	0.400	-0.855	0.700	-0.529
0.840	-0.679	0.310	-0.489**	0.410	2.880**	0.750	-0.600
0.900	-0.533	0.320	-0.417**	0.430	-0.305**	0.800	-0.678
0.960	-0.429	0.340	-0.309**	0.440	-0.333**	0.830	-0.625
		0.350	2.136**	0.460	-0.391**	0.900	-0.804
		0.370	-0.425**	0.490	-0.804	0.960	-0.538
		0.380	-0.141**	0.500	-0.360**		
		0.400	-0.724	0.520	-0.261**		
		0.410	-0.264**	0.540	-0.297**		
		0.430	-0.250**	0.550	-0.478**		
		0.440	-0.731	0.580	-0.792		
		0.460	-0.193**	0.600	-0.321**		
		0.470	-0.020**	0.610	-0.306**		
		0.490	-0.790	0.650	6.292**		
		0.500	-0.264**	0.700	-0.891		
		0.520	0.051**	0.750	-0.984		
		0.530	-0.783	0.820	-0.743		
		0.550	-0.092**	0.890	-0.533		
		0.560	-0.303**	0.900	-0.494		
		0.580	-0.791	0.960	-0.382		
		0.590	0.753**				
		0.600	-0.464**				
		0.640	-0.833				
		0.700	-0.825				
		0.750	-0.169**				
		0.820	-0.550				
		0.870	-0.205				
		0.930	-0.427				
		0.960	-0.422				
			Lower Surface				
0.020	-0.043	0.020	0.001	0.020	0.342	0.020	0.697
0.110	-0.161	0.060	0.191	0.060	0.309	0.060	4.557**
0.230	-0.220	0.090	0.078	0.090	4.160**	0.110	0.211
0.400	-0.214	0.120	0.001**	0.120	-0.153	0.250	-0.056
0.490	-0.264	0.200	-0.027	0.200	-0.017	0.400	-0.090
0.630	2.488**	0.260	-0.171	0.250	-0.057	0.490	-0.239
0.750	-0.154	0.400	-0.211	0.400	-0.182	0.580	-0.378
0.850	-0.099	0.490	-0.343	0.490	-0.153	0.650	-0.578
0.900	-0.018	0.580	-0.414	0.580	-0.337	0.750	-0.120
0.960	-0.123	0.640	-0.464	0.650	-0.181	0.830	0.113
		0.750	0.041	0.750	-0.131	0.900	0.259
		0.870	0.085	0.890	0.126	0.960	0.173
		0.930	0.073	0.930	0.096		
		0.960	0.022	0.960	2.330**		
CN =	0.431		0.563		0.659		0.640

Table H-2. Continued.

Flight 221, Wing sweep = 26°, Time = 14-14-17-500, MINF = 0.939, Camber = 0/2, ALPT = 8.06, BETA = -0.24, QINF = 305.6, RNPU = 2.3E+06, CNWP = 0.3526

η = 0.93		0.76		0.59		0.40	
			Upper Surface				
x/c	CP	*x/c*	CP	*x/c*	CP	*x/c*	CP
0.020	-0.589	0.000	0.830	0.000	0.740**	0.010	-0.835
0.060	-0.565	0.020	-0.855	0.020	-0.682	0.020	-0.908
0.110	-0.601	0.040	-0.586	0.060	-3.041**	0.060	-0.923
0.200	-0.613	0.060	-0.718	0.090	-0.768	0.110	-0.882
0.230	-0.570	0.090	-0.714	0.110	-0.810	0.140	-0.906
0.400	-0.636	0.130	-0.710	0.130	-0.710	0.190	-1.619**
0.490	-0.591	0.150	-0.740	0.150	-0.796	0.250	-0.932
0.590	-0.628	0.200	-0.654	0.210	-0.727	0.400	-0.689
0.630	-0.560	0.250	-0.742	0.250	-0.749	0.490	-0.628
0.700	-0.586	0.260	-0.656	0.340	-0.806	0.580	-0.586
0.750	-0.773	0.280	-0.727	0.370	-0.791	0.650	-0.541
0.810	-0.749	0.290	-0.727	0.400	-0.831	0.700	-0.537
0.840	-0.744	0.310	-0.732	0.410	-2.596**	0.750	-0.614
0.900	-0.240	0.320	-0.726	0.430	-0.814	0.800	-0.720
0.960	-0.257	0.340	-0.711	0.440	-0.785	0.830	-0.683
		0.350	-0.457**	0.460	-0.811	0.900	-0.842
		0.370	-0.704	0.490	-0.794	0.960	-0.430
		0.380	-0.771	0.500	-0.843		
		0.400	-0.670	0.520	-0.798		
		0.410	-0.765	0.540	-0.801		
		0.430	-0.752	0.550	-0.827		
		0.440	-0.697	0.580	-0.829		
		0.460	-0.802	0.600	-0.759		
		0.470	-0.724	0.610	-0.758		
		0.490	-0.752	0.650	0.151**		
		0.500	-0.773	0.700	-0.878		
		0.520	-0.770	0.750	-0.941		
		0.530	-0.748	0.820	-0.760		
		0.550	-0.795	0.890	-0.363		
		0.560	-0.744	0.900	-0.382		
		0.580	-0.759	0.960	-0.296		
		0.590	-0.803				
		0.600	-0.797				
		0.640	-0.807				
		0.700	-0.830				
		0.750	-0.173**				
		0.820	-0.376				
		0.870	-0.312				
		0.930	-0.338				
		0.960	-0.305				
			Lower Surface				
0.020	-0.159	0.020	-0.246	0.020	0.236	0.020	0.595
0.110	-0.294	0.060	0.103	0.060	0.214	0.060	0.959**
0.230	-0.290	0.090	0.004	0.090	1.417**	0.110	0.063
0.400	-0.261	0.120	-0.062	0.120	-0.246	0.250	-0.132
0.490	-0.310	0.200	-0.093	0.200	-0.110	0.400	-0.177
0.630	2.162**	0.260	-0.253	0.250	-0.145	0.490	-0.330
0.750	-0.154	0.400	-0.281	0.400	-0.203	0.580	-0.407
0.850	-0.024	0.490	-0.404	0.490	-0.200	0.650	-0.655
0.900	0.048	0.580	-0.456	0.580	-0.414	0.750	-0.187
0.960	-0.004	0.640	-0.509	0.650	-0.199	0.830	0.019
		0.750	-0.044	0.750	-0.135	0.900	0.182
		0.870	0.063	0.890	0.077	0.960	0.127
		0.930	0.074	0.930	0.090		
		0.960	0.017	0.960	-2.118**		
CN =	0.356		0.470		0.580		0.566

Table H-2. Continued.

Flight 229, Wing sweep = 26°, Time = 11-46-10-000, MINF = 0.947, Camber = 5/2, ALPT = 6.50, BETA = -0.10, QINF = 301.2, RNPU = 2.2E+06, CNWP = 0.3148

η = 0.93		0.76		0.59		0.40	
			Upper Surface				
x/c	CP	*x/c*	CP	*x/c*	CP	*x/c*	CP
0.020	0.232	0.000	0.722	0.000	7.935**	0.010	-0.109
0.060	-0.047	0.020	-0.017	0.020	0.098	0.020	-0.049
0.110	-0.256	0.040	-0.703**	0.060	-3.997**	0.060	-0.395
0.200	-0.641	0.060	-0.198	0.090	-0.333	0.110	-0.610
0.230	-0.621	0.090	-0.257	0.110	-0.512	0.140	-0.792
0.400	-0.594	0.130	-0.381	0.130	-0.464	0.190	-1.591**
0.490	-0.535	0.150	-0.604	0.150	-0.687	0.250	-0.771
0.590	-0.517	0.200	-0.581	0.210	-0.634	0.400	-0.616
0.630	-0.520	0.250	-0.064**	0.250	-0.652	0.490	-0.556
0.700	-0.551	0.260	-0.624	0.340	-0.106**	0.580	-0.438
0.750	-0.701	0.280	0.041**	0.370	2.888**	0.650	-0.437
0.810	-0.675	0.290	-0.223**	0.400	-0.793	0.700	-0.431
0.840	-0.656	0.310	-0.300**	0.410	2.904**	0.750	-0.501
0.900	-0.185	0.320	-0.279**	0.430	-0.112**	0.800	-0.626
0.960	-0.141	0.340	-0.177**	0.440	-0.160**	0.830	-0.572
		0.350	2.157**	0.460	-0.226**	0.900	-0.762
		0.370	-0.263**	0.490	-0.695	0.960	-0.387
		0.380	-0.148**	0.500	-0.176**		
		0.400	-0.615	0.520	-0.095**		
		0.410	-0.192**	0.540	-0.123**		
		0.430	-0.128**	0.550	-0.304**		
		0.440	-0.616	0.580	-0.681		
		0.460	-0.149**	0.600	-0.130**		
		0.470	-0.047**	0.610	-0.118**		
		0.490	-0.671	0.650	6.336**		
		0.500	-0.232**	0.700	-0.691		
		0.520	-0.121**	0.750	-0.746		
		0.530	-0.671	0.820	-0.612		
		0.550	-0.206**	0.890	-0.419		
		0.560	-0.118**	0.900	-0.340		
		0.580	-0.682	0.960	-0.230		
		0.590	0.291**				
		0.600	-0.331**				
		0.640	-0.742				
		0.700	-0.730				
		0.750	-0.191**				
		0.820	-0.439				
		0.870	-0.230				
		0.930	-0.274				
		0.960	-0.260				
			Lower Surface				
0.020	-1.033	0.020	-0.797	0.020	-0.577	0.020	0.189
0.110	-0.403	0.060	-0.095	0.060	0.055	0.060	4.591**
0.230	-0.078	0.090	-0.172	0.090	4.192**	0.110	0.004
0.400	-0.233	0.120	-0.135**	0.120	-0.356	0.250	-0.139
0.490	-0.257	0.200	-0.089	0.200	-0.124	0.400	-0.180
0.630	2.510**	0.260	-0.185	0.250	-0.137	0.490	-0.329
0.750	-0.441	0.400	-0.290	0.400	-0.259	0.580	-0.402
0.850	-0.061	0.490	-0.408	0.490	-0.204	0.650	-0.647
0.900	0.054	0.580	-0.453	0.580	-0.407	0.750	-0.282
0.960	0.029	0.640	-0.447	0.650	-0.216	0.830	-0.077
		0.750	-0.073	0.750	-0.139	0.900	0.111
		0.870	0.029	0.890	0.034	0.960	0.144
		0.930	0.045	0.930	0.061		
		0.960	0.016	0.960	2.352**		
CN =	0.240		0.321		0.422		0.386

Table H-2. Continued.

Flight 229, Wing sweep = 26°, Time = 11-46-40-500, MINF = 0.946, Camber = 5/2, ALPT = 6.10, BETA = 0.19, QINF = 299.6, RNPU = 2.2E+06, CNWP = 0.2930

η = 0.93		0.76		0.59		0.40	
			Upper Surface				
x/c	CP	*x/c*	CP	*x/c*	CP	*x/c*	CP
0.020	0.238	0.000	0.687	0.000	7.982**	0.010	-0.209
0.060	0.027	0.020	-0.008	0.020	0.113	0.020	-0.060
0.110	-0.268	0.040	-0.684**	0.060	-4.014**	0.060	-0.371
0.200	-0.627	0.060	-0.194	0.090	-0.309	0.110	-0.579
0.230	-0.589	0.090	-0.245	0.110	-0.507	0.140	-0.770
0.400	-0.585	0.130	-0.393	0.130	-0.450	0.190	-1.595**
0.490	-0.544	0.150	-0.575	0.150	-0.658	0.250	-0.785
0.590	-0.565	0.200	-0.568	0.210	-0.638	0.400	-0.622
0.630	-0.522	0.250	-0.046**	0.250	-0.636	0.490	-0.545
0.700	-0.541	0.260	-0.624	0.340	-0.086**	0.580	-0.436
0.750	-0.711	0.280	0.064**	0.370	2.877**	0.650	-0.439
0.810	-0.685	0.290	-0.182**	0.400	-0.837	0.700	-0.423
0.840	-0.662	0.310	-0.281**	0.410	2.925**	0.750	-0.491
0.900	-0.164	0.320	-0.262**	0.430	-0.092**	0.800	-0.633
0.960	-0.130	0.340	-0.159**	0.440	-0.150**	0.830	-0.576
		0.350	2.173**	0.460	-0.212**	0.900	-0.752
		0.370	-0.251**	0.490	-0.708	0.960	-0.352
		0.380	-0.144**	0.500	-0.163**		
		0.400	-0.650	0.520	-0.073**		
		0.410	-0.166**	0.540	-0.119**		
		0.430	-0.100**	0.550	-0.274**		
		0.440	-0.614	0.580	-0.660		
		0.460	-0.108**	0.600	-0.114**		
		0.470	-0.024**	0.610	-0.115**		
		0.490	-0.662	0.650	6.375**		
		0.500	-0.243**	0.700	-0.672		
		0.520	-0.074**	0.750	-0.738		
		0.530	-0.674	0.820	-0.617		
		0.550	-0.169**	0.890	-0.408		
		0.560	-0.094**	0.900	-0.320		
		0.580	-0.683	0.960	-0.209		
		0.590	0.301**				
		0.600	-0.332**				
		0.640	-0.743				
		0.700	-0.715				
		0.750	-0.187**				
		0.820	-0.369				
		0.870	-0.242				
		0.930	-0.282				
		0.960	-0.268				
			Lower Surface				
0.020	-1.101	0.020	-0.850	0.020	-0.637	0.020	0.113
0.110	-0.402	0.060	-0.173	0.060	0.019	0.060	4.621**
0.230	-0.103	0.090	-0.218	0.090	4.219**	0.110	-0.047
0.400	-0.210	0.120	-0.163**	0.120	-0.394	0.250	-0.183
0.490	-0.276	0.200	-0.095	0.200	-0.182	0.400	-0.191
0.630	2.529**	0.260	-0.203	0.250	-0.177	0.490	-0.356
0.750	-0.435	0.400	-0.302	0.400	-0.275	0.580	-0.439
0.850	-0.060	0.490	-0.417	0.490	-0.200	0.650	-0.657
0.900	0.066	0.580	-0.481	0.580	-0.419	0.750	-0.298
0.960	0.051	0.640	-0.456	0.650	-0.224	0.830	-0.113
		0.750	-0.085	0.750	-0.135	0.900	0.092
		0.870	0.034	0.890	0.017	0.960	0.122
		0.930	0.031	0.930	0.066		
		0.960	0.021	0.960	2.369**		
CN =	0.236		0.301		0.400		0.354

Table H-2. Continued.

Flight 217, Wing sweep = 26°, Time = 9-21-19-500, MINF = 0.606, Camber = 0/2, ALPT = 5.98, BETA = 0.48, QINF = 299.2, RNPU = 3.0E+06, CNWP = 0.3170

η = 0.93		0.76		0.59		0.40	
			Upper Surface				
x/c	CP	*x/c*	CP	*x/c*	CP	*x/c*	CP
0.020	-0.489	0.000	0.684	0.000	6.135**	0.010	-1.678
0.060	-0.316	0.020	-0.961	0.020	-1.135	0.020	-0.976
0.110	-0.301	0.040	-0.626	0.060	-1.349**	0.060	-0.793
0.200	-0.243	0.060	-0.573	0.090	-0.510	0.110	-0.556
0.230	-0.268	0.090	-0.411	0.110	-0.554	0.140	-0.547
0.400	-0.182	0.130	-0.407	0.130	-0.502	0.190	-3.888**
0.490	-0.213	0.150	-0.404	0.150	-0.483	0.250	-0.403
0.590	-0.209	0.200	-0.364	0.210	-0.484	0.400	-0.351
0.630	-0.197	0.250	-0.349	0.250	-0.359	0.490	-0.273
0.700	-0.167	0.260	-0.322	0.340	-0.384	0.580	-0.292
0.750	-0.213	0.280	-0.335	0.370	-0.373	0.650	-0.339
0.810	-0.184	0.290	-0.318	0.400	-0.328	0.700	-0.306
0.840	-0.176	0.310	-0.312	0.410	0.602**	0.750	-0.287
0.900	-0.101	0.320	-0.320	0.430	-0.348	0.800	-0.300
0.960	-0.013	0.340	-0.317	0.440	-0.339	0.830	-0.268
		0.350	-0.178**	0.460	-0.328	0.900	-0.181
		0.370	-0.282	0.490	-0.267	0.960	-0.015
		0.380	-0.314	0.500	-0.319		
		0.400	-0.236	0.520	-0.298		
		0.410	-0.298	0.540	-0.315		
		0.430	-0.268	0.550	-0.249		
		0.440	-0.260	0.580	-0.227		
		0.460	-0.268	0.600	-0.304		
		0.470	-0.293	0.610	-0.309		
		0.490	-0.262	0.650	4.761**		
		0.500	-0.262	0.700	-0.331		
		0.520	-0.292	0.750	-0.326		
		0.530	-0.258	0.820	-0.286		
		0.550	-0.319	0.890	-0.134		
		0.560	-0.290	0.900	-0.098		
		0.580	-0.259	0.960	0.014		
		0.590	-0.279				
		0.600	-0.276				
		0.640	-0.285				
		0.700	-0.283				
		0.750	-0.030**				
		0.820	-0.226				
		0.870	-0.209				
		0.930	-0.095				
		0.960	-0.047				
			Lower Surface				
0.020	-0.030	0.020	0.165	0.020	0.316	0.020	0.585
0.110	-0.066	0.060	0.121	0.060	0.235	0.060	-0.880
0.230	0.003	0.090	0.066	0.090	1.081**	0.110	0.193
0.400	-0.022	0.120	0.022	0.120	-0.062	0.250	-0.086
0.490	0.005	0.200	-0.010	0.200	-0.014	0.400	-0.081
0.630	1.842**	0.260	-0.057	0.250	-0.041	0.490	-0.111
0.750	0.006	0.400	-0.060	0.400	-0.083	0.580	-0.157
0.850	0.077	0.490	-0.086	0.490	-0.017	0.650	-0.055
0.900	0.152	0.580	-0.092	0.580	-0.105	0.750	0.127
0.960	0.137	0.640	0.042	0.650	-0.039	0.830	0.283
		0.750	0.183	0.750	0.183	0.900	0.303
		0.870	0.248	0.890	0.265	0.960	0.252
		0.930	0.200	0.930	0.221		
		0.960	0.149	0.960	0.514**		
CN =	0.208		0.345		0.350		0.333

Table H-2. Continued.

Flight 217, Wing sweep = 26°, Time = 9-21-36-500, MINF = 0.651, Camber = 0/2, ALPT = 4.59, BETA = 0.37, QINF = 344.3, RNPU = 3.3E+06, CNWP = 0.2748

η = 0.93		0.76		0.59		0.40	
			Upper Surface				
x/c	CP	*x/c*	CP	*x/c*	CP	*x/c*	CP
0.020	-0.175	0.000	0.831	0.000	5.343**	0.010	-1.301
0.060	-0.184	0.020	-0.506	0.020	-0.639	0.020	-0.700
0.110	-0.248	0.040	-0.370	0.060	-3.437**	0.060	-0.587
0.200	-0.184	0.060	-0.383	0.090	-0.377	0.110	-0.455
0.230	-0.159	0.090	-0.289	0.110	-0.411	0.140	-0.451
0.400	-0.155	0.130	-0.298	0.130	-0.402	0.190	-3.367**
0.490	-0.157	0.150	-0.309	0.150	-0.397	0.250	-0.369
0.590	-0.205	0.200	-0.282	0.210	-0.397	0.400	-0.306
0.630	-0.182	0.250	-0.282	0.250	-0.287	0.490	-0.260
0.700	-0.156	0.260	-0.268	0.340	-0.322	0.580	-0.242
0.750	-0.202	0.280	-0.283	0.370	-0.338	0.650	-0.331
0.810	-0.185	0.290	-0.269	0.400	-0.292	0.700	-0.293
0.840	-0.172	0.310	-0.258	0.410	0.535**	0.750	-0.288
0.900	-0.110	0.320	-0.271	0.430	-0.297	0.800	-0.301
0.960	-0.008	0.340	-0.258	0.440	-0.296	0.830	-0.265
		0.350	-0.170**	0.460	-0.292	0.900	-0.181
		0.370	-0.239	0.490	-0.252	0.960	-0.020
		0.380	-0.271	0.500	-0.284		
		0.400	-0.203	0.520	-0.295		
		0.410	-0.254	0.540	-0.268		
		0.430	-0.234	0.550	-0.217		
		0.440	-0.216	0.580	-0.219		
		0.460	-0.227	0.600	-0.269		
		0.470	-0.256	0.610	-0.287		
		0.490	-0.231	0.650	4.150**		
		0.500	-0.254	0.700	-0.336		
		0.520	-0.240	0.750	-0.303		
		0.530	-0.234	0.820	-0.281		
		0.550	-0.268	0.890	-0.130		
		0.560	-0.259	0.900	-0.091		
		0.580	-0.231	0.960	0.014		
		0.590	-0.268				
		0.600	-0.268				
		0.640	-0.275				
		0.700	-0.268				
		0.750	-0.033**				
		0.820	-0.226				
		0.870	-0.204				
		0.930	-0.095				
		0.960	-0.029				
			Lower Surface				
0.020	-0.258	0.020	-0.107	0.020	0.076	0.020	0.369
0.110	-0.156	0.060	-0.059	0.060	0.084	0.060	-0.848
0.230	-0.073	0.090	-0.058	0.090	0.951**	0.110	0.002
0.400	-0.071	0.120	-0.077	0.120	-0.165	0.250	-0.172
0.490	-0.048	0.200	-0.070	0.200	-0.110	0.400	-0.141
0.630	1.613**	0.260	-0.119	0.250	-0.134	0.490	-0.169
0.750	0.009	0.400	-0.114	0.400	-0.133	0.580	-0.198
0.850	0.093	0.490	-0.125	0.490	-0.028	0.650	-0.093
0.900	0.167	0.580	-0.130	0.580	-0.143	0.750	0.121
0.960	0.158	0.640	0.035	0.650	-0.047	0.830	0.269
		0.750	0.167	0.750	0.172	0.900	0.298
		0.870	0.249	0.890	0.267	0.960	0.253
		0.930	0.193	0.930	0.223		
		0.960	0.149	0.960	0.459**		
CN =	0.135		0.247		0.266		0.241

Table H-2. Continued.

Flight 217, Wing sweep = 26°, Time = 9-21-44-000, MINF = 0.700, Camber = 0/2, ALPT = 4.77, BETA = 0.11, QINF = 400.5, RNPU = 3.6E+06, CNWP = 0.2929

η = 0.93		0.76		0.59		0.40	
			Upper Surface				
x/c	CP	*x/c*	CP	*x/c*	CP	*x/c*	CP
0.020	-0.196	0.000	0.837	0.000	4.574**	0.010	-1.215
0.060	-0.205	0.020	-0.475	0.020	-0.720	0.020	-0.881
0.110	-0.211	0.040	-0.392	0.060	-2.973**	0.060	-0.648
0.200	-0.194	0.060	-0.409	0.090	-0.405	0.110	-0.463
0.230	-0.183	0.090	-0.317	0.110	-0.431	0.140	-0.478
0.400	-0.148	0.130	-0.322	0.130	-0.428	0.190	-2.912**
0.490	-0.160	0.150	-0.333	0.150	-0.395	0.250	-0.335
0.590	-0.203	0.200	-0.296	0.210	-0.433	0.400	-0.313
0.630	-0.182	0.250	-0.293	0.250	-0.315	0.490	-0.257
0.700	-0.170	0.260	-0.290	0.340	-0.341	0.580	-0.258
0.750	-0.203	0.280	-0.298	0.370	-0.347	0.650	-0.335
0.810	-0.205	0.290	-0.292	0.400	-0.299	0.700	-0.309
0.840	-0.179	0.310	-0.277	0.410	0.441**	0.750	-0.305
0.900	-0.109	0.320	-0.288	0.430	-0.320	0.800	-0.306
0.960	0.003	0.340	-0.282	0.440	-0.298	0.830	-0.276
		0.350	-0.181**	0.460	-0.303	0.900	-0.189
		0.370	-0.250	0.490	-0.270	0.960	-0.030
		0.380	-0.281	0.500	-0.296		
		0.400	-0.213	0.520	-0.294		
		0.410	-0.262	0.540	-0.289		
		0.430	-0.244	0.550	-0.236		
		0.440	-0.218	0.580	-0.226		
		0.460	-0.234	0.600	-0.290		
		0.470	-0.266	0.610	-0.300		
		0.490	-0.229	0.650	3.548**		
		0.500	-0.257	0.700	-0.330		
		0.520	-0.251	0.750	-0.318		
		0.530	-0.242	0.820	-0.286		
		0.550	-0.275	0.890	-0.121		
		0.560	-0.267	0.900	-0.080		
		0.580	-0.242	0.960	0.025		
		0.590	-0.270				
		0.600	-0.265				
		0.640	-0.289				
		0.700	-0.272				
		0.750	-0.037**				
		0.820	-0.226				
		0.870	-0.200				
		0.930	-0.083				
		0.960	-0.020				
			Lower Surface				
0.020	-0.263	0.020	-0.074	0.020	0.074	0.020	0.395
0.110	-0.162	0.060	-0.020	0.060	0.128	0.060	-0.715
0.230	-0.072	0.090	-0.055	0.090	0.799**	0.110	-0.001
0.400	-0.045	0.120	-0.096	0.120	-0.143	0.250	-0.171
0.490	-0.050	0.200	-0.074	0.200	-0.112	0.400	-0.154
0.630	1.367**	0.260	-0.127	0.250	-0.135	0.490	-0.181
0.750	0.025	0.400	-0.116	0.400	-0.150	0.580	-0.216
0.850	0.097	0.490	-0.122	0.490	-0.033	0.650	-0.089
0.900	0.176	0.580	-0.126	0.580	-0.153	0.750	0.124
0.960	0.159	0.640	0.039	0.650	-0.048	0.830	0.279
		0.750	0.180	0.750	0.189	0.900	0.307
		0.870	0.292	0.890	0.281	0.960	0.266
		0.930	0.201	0.930	0.233		
		0.960	0.168	0.960	0.375**		
CN =	0.143		0.262		0.282		0.259

Table H-2. Continued.

Flight 217, Wing sweep = 26°, Time = 9-21-49-500, MINF = 0.751, Camber = 0/2, ALPT = 4.06, BETA = 0.37, QINF = 462.6, RNPU = 4.0E+06, CNWP = 0.2450

η = 0.93		0.76		0.59		0.40	
			Upper Surface				
x/c	CP	*x/c*	CP	*x/c*	CP	*x/c*	CP
0.020	-0.059	0.000	0.852	0.000	3.947**	0.010	-1.006
0.060	-0.160	0.020	-0.338	0.020	-0.492	0.020	-1.032
0.110	-0.203	0.040	-0.284	0.060	-2.587**	0.060	-0.597
0.200	-0.177	0.060	-0.337	0.090	-0.312	0.110	-0.426
0.230	-0.213	0.090	-0.259	0.110	-0.380	0.140	-0.462
0.400	-0.161	0.130	-0.271	0.130	-0.387	0.190	-2.535**
0.490	-0.171	0.150	-0.298	0.150	-0.383	0.250	-0.349
0.590	-0.203	0.200	-0.273	0.210	-0.407	0.400	-0.307
0.630	-0.203	0.250	-0.283	0.250	-0.300	0.490	-0.266
0.700	-0.180	0.260	-0.268	0.340	-0.319	0.580	-0.266
0.750	-0.222	0.280	-0.283	0.370	-0.333	0.650	-0.338
0.810	-0.200	0.290	-0.283	0.400	-0.295	0.700	-0.321
0.840	-0.178	0.310	-0.267	0.410	0.369**	0.750	-0.315
0.900	-0.101	0.320	-0.272	0.430	-0.305	0.800	-0.309
0.960	0.010	0.340	-0.265	0.440	-0.298	0.830	-0.278
		0.350	-0.200**	0.460	-0.300	0.900	-0.191
		0.370	-0.241	0.490	-0.262	0.960	-0.012
		0.380	-0.269	0.500	-0.292		
		0.400	-0.283	0.520	-0.285		
		0.410	-0.258	0.540	-0.285		
		0.430	-0.242	0.550	-0.236		
		0.440	-0.230	0.580	-0.226		
		0.460	-0.239	0.600	-0.286		
		0.470	-0.264	0.610	-0.303		
		0.490	-0.240	0.650	3.059**		
		0.500	-0.249	0.700	-0.339		
		0.520	-0.255	0.750	-0.325		
		0.530	-0.243	0.820	-0.307		
		0.550	-0.275	0.890	-0.128		
		0.560	-0.268	0.900	-0.082		
		0.580	-0.244	0.960	0.025		
		0.590	-0.274				
		0.600	-0.268				
		0.640	-0.310				
		0.700	-0.291				
		0.750	-0.040**				
		0.820	-0.247				
		0.870	-0.215				
		0.930	-0.089				
		0.960	-0.023				
			Lower Surface				
0.020	-0.405	0.020	-0.254	0.020	-0.049	0.020	0.284
0.110	-0.235	0.060	-0.123	0.060	-0.004	0.060	-0.685
0.230	-0.132	0.090	-0.138	0.090	0.679**	0.110	-0.062
0.400	-0.074	0.120	-0.162	0.120	-0.201	0.250	-0.235
0.490	-0.056	0.200	-0.127	0.200	-0.180	0.400	-0.210
0.630	1.171**	0.260	-0.189	0.250	-0.205	0.490	-0.228
0.750	0.031	0.400	-0.150	0.400	-0.192	0.580	-0.260
0.850	0.101	0.490	-0.156	0.490	-0.051	0.650	-0.114
0.900	0.189	0.580	-0.145	0.580	-0.188	0.750	0.128
0.960	0.170	0.640	0.030	0.650	-0.048	0.830	0.274
		0.750	0.178	0.750	0.199	0.900	0.316
		0.870	0.252	0.890	0.291	0.960	0.265
		0.930	0.213	0.930	0.242		
		0.960	0.171	0.960	0.312**		
CN =	0.127		0.220		0.239		0.233

Table H-2. Continued.

Flight 217, Wing sweep = 26°, Time = 9-21-55-000, MINF = 0.803, Camber = 0/2, ALPT = 3.79, BETA = 0.48, QINF = 531.0, RNPU = 4.3E+06, CNWP = 0.2570

η = 0.93		0.76		0.59		0.40	
			Upper Surface				
x/c	CP	*x/c*	CP	*x/c*	CP	*x/c*	CP
0.020	-0.018	0.000	0.856	0.000	3.432**	0.010	-0.831
0.060	-0.136	0.020	-0.270	0.020	-0.409	0.020	-0.883
0.110	-0.288	0.040	-0.245	0.060	-2.261**	0.060	-0.681
0.200	-0.183	0.060	-0.327	0.090	-0.350	0.110	-0.329
0.230	-0.193	0.090	-0.253	0.110	-0.364	0.140	-0.500
0.400	-0.171	0.130	-0.273	0.130	-0.391	0.190	-2.216**
0.490	-0.162	0.150	-0.304	0.150	-0.379	0.250	-0.351
0.590	-0.215	0.200	-0.284	0.210	-0.425	0.400	-0.310
0.630	-0.213	0.250	-0.290	0.250	-0.314	0.490	-0.271
0.700	-0.186	0.260	-0.276	0.340	-0.319	0.580	-0.263
0.750	-0.220	0.280	-0.289	0.370	-0.333	0.650	-0.363
0.810	-0.198	0.290	-0.289	0.400	-0.294	0.700	-0.340
0.840	-0.192	0.310	-0.275	0.410	0.314**	0.750	-0.350
0.900	-0.093	0.320	-0.284	0.430	-0.315	0.800	-0.316
0.960	0.032	0.340	-0.273	0.440	-0.308	0.830	-0.285
		0.350	-0.212**	0.460	-0.303	0.900	-0.179
		0.370	-0.253	0.490	-0.270	0.960	0.002
		0.380	-0.276	0.500	-0.302		
		0.400	-0.210	0.520	-0.294		
		0.410	-0.264	0.540	-0.287		
		0.430	-0.244	0.550	-0.245		
		0.440	-0.231	0.580	-0.238		
		0.460	-0.246	0.600	-0.302		
		0.470	-0.260	0.610	-0.317		
		0.490	-0.245	0.650	2.657**		
		0.500	-0.252	0.700	-0.361		
		0.520	-0.247	0.750	-0.326		
		0.530	-0.251	0.820	-0.313		
		0.550	-0.273	0.890	-0.115		
		0.560	-0.272	0.900	-0.070		
		0.580	-0.242	0.960	0.038		
		0.590	-0.281				
		0.600	-0.277				
		0.640	-0.335				
		0.700	-0.294				
		0.750	-0.047**				
		0.820	-0.248				
		0.870	-0.213				
		0.930	-0.079				
		0.960	-0.011				
			Lower Surface				
0.020	-0.517	0.020	-0.346	0.020	-0.112	0.020	0.333
0.110	-0.283	0.060	-0.165	0.060	-0.033	0.060	-0.625
0.230	-0.163	0.090	-0.183	0.090	0.584**	0.110	-0.118
0.400	-0.101	0.120	-0.219	0.120	-0.230	0.250	-0.285
0.490	-0.073	0.200	-0.167	0.200	-0.264	0.400	-0.260
0.630	1.013**	0.260	-0.233	0.250	-0.260	0.490	-0.282
0.750	0.036	0.400	-0.176	0.400	-0.230	0.580	-0.308
0.850	0.111	0.490	-0.175	0.490	-0.060	0.650	-0.132
0.900	0.204	0.580	-0.160	0.580	-0.220	0.750	0.120
0.960	0.185	0.640	0.021	0.650	-0.049	0.830	0.277
		0.750	0.185	0.750	0.204	0.900	0.319
		0.870	0.233	0.890	0.299	0.960	0.277
		0.930	0.223	0.930	0.253		
		0.960	0.181	0.960	0.264**		
CN =	0.117		0.199		0.227		0.211

Table H-2. Continued.

Flight 217, Wing sweep = 26°, Time = 9-22-0-500, MINF = 0.851, Camber = 0/2, ALPT = 4.32, BETA = 0.89, QINF = 598.9, RNPU = 4.7E+06, CNWP = 0.2841

η = 0.93		0.76		0.59		0.40	
			Upper Surface				
x/c	CP	*x/c*	CP	*x/c*	CP	*x/c*	CP
0.020	-0.041	0.000	0.871	0.000	3.036**	0.010	-0.697
0.060	-0.179	0.020	-0.336	0.020	-0.419	0.020	-0.776
0.110	-0.242	0.040	-0.298	0.060	-2.012**	0.060	-0.635
0.200	-0.214	0.060	-0.365	0.090	-0.618	0.110	-0.671
0.230	-0.276	0.090	-0.310	0.110	-0.605	0.140	-0.679
0.400	-0.187	0.130	-0.352	0.130	-0.533	0.190	-1.971**
0.490	-0.191	0.150	-0.331	0.150	-0.496	0.250	-0.501
0.590	-0.239	0.200	-0.340	0.210	-0.477	0.400	-0.292
0.630	-0.246	0.250	-0.364	0.250	-0.299	0.490	-0.289
0.700	-0.197	0.260	-0.290	0.340	-0.394	0.580	-0.293
0.750	-0.220	0.280	-0.312	0.370	-0.340	0.650	-0.397
0.810	-0.196	0.290	-0.332	0.400	-0.363	0.700	-0.358
0.840	-0.191	0.310	-0.325	0.410	0.271**	0.750	-0.394
0.900	-0.083	0.320	-0.319	0.430	-0.338	0.800	-0.395
0.960	0.035	0.340	-0.311	0.440	-0.322	0.830	-0.424
		0.350	-0.256**	0.460	-0.317	0.900	-0.153
		0.370	-0.282	0.490	-0.279	0.960	0.022
		0.380	-0.305	0.500	-0.312		
		0.400	-0.262	0.520	-0.307		
		0.410	-0.283	0.540	-0.285		
		0.430	-0.260	0.550	-0.250		
		0.440	-0.248	0.580	-0.234		
		0.460	-0.271	0.600	-0.287		
		0.470	-0.287	0.610	-0.312		
		0.490	-0.265	0.650	2.349**		
		0.500	-0.272	0.700	-0.536		
		0.520	-0.279	0.750	-0.480		
		0.530	-0.270	0.820	-0.288		
		0.550	-0.313	0.890	-0.087		
		0.560	-0.300	0.900	-0.046		
		0.580	-0.266	0.960	0.059		
		0.590	-0.299				
		0.600	-0.271				
		0.640	-0.512				
		0.700	-0.443				
		0.750	-0.051**				
		0.820	-0.241				
		0.870	-0.204				
		0.930	-0.058				
		0.960	0.004				
			Lower Surface				
0.020	-0.553	0.020	-0.341	0.020	-0.105	0.020	0.357
0.110	-0.411	0.060	-0.152	0.060	-0.027	0.060	-0.556
0.230	-0.180	0.090	-0.183	0.090	0.511**	0.110	-0.116
0.400	-0.120	0.120	-0.244	0.120	-0.226	0.250	-0.311
0.490	-0.093	0.200	-0.284	0.200	-0.299	0.400	-0.305
0.630	0.891**	0.260	-0.291	0.250	-0.324	0.490	-0.368
0.750	0.025	0.400	-0.207	0.400	-0.287	0.580	-0.389
0.850	0.112	0.490	-0.188	0.490	-0.078	0.650	-0.145
0.900	0.197	0.580	-0.178	0.580	-0.253	0.750	0.119
0.960	0.191	0.640	0.026	0.650	-0.063	0.830	0.275
		0.750	0.188	0.750	0.212	0.900	0.322
		0.870	0.264	0.890	0.306	0.960	0.283
		0.930	0.232	0.930	0.260		
		0.960	0.191	0.960	0.228**		
CN =	0.106		0.226		0.264		0.245

Table H-2. Continued.

Flight 217, Wing sweep = 26°, Time = 9-22-6-500, MINF = 0.883, Camber = 0/2, ALPT = 4.23, BETA = 0.48, QINF = 642.7, RNPU = 4.9E+06, CNWP = 0.2886

η = 0.93		0.76		0.59		0.40	
			Upper Surface				
x/c	CP	*x/c*	CP	*x/c*	CP	*x/c*	CP
0.020	-0.031	0.000	0.860	0.000	2.833**	0.010	-0.616
0.060	-0.200	0.020	-0.282	0.020	-0.341	0.020	-0.710
0.110	-0.297	0.040	-0.272	0.060	-1.870**	0.060	-0.575
0.200	-0.234	0.060	-0.452	0.090	-0.564	0.110	-0.631
0.230	-0.348	0.090	-0.418	0.110	-0.561	0.140	-0.646
0.400	-0.160	0.130	-0.358	0.130	-0.511	0.190	-1.833**
0.490	-0.174	0.150	-0.368	0.150	-0.495	0.250	-0.594
0.590	-0.225	0.200	-0.335	0.210	-0.501	0.400	-0.609
0.630	-0.256	0.250	-0.476	0.250	-0.558	0.490	-0.228
0.700	-0.354	0.260	-0.470	0.340	-0.628	0.580	-0.236
0.750	-0.200	0.280	-0.483	0.370	-0.638	0.650	-0.339
0.810	-0.195	0.290	-0.495	0.400	-0.563	0.700	-0.319
0.840	-0.186	0.310	-0.477	0.410	0.257**	0.750	-0.389
0.900	-0.077	0.320	-0.498	0.430	-0.267	0.800	-0.553
0.960	0.047	0.340	-0.518	0.440	-0.230	0.830	-0.535
		0.350	-0.387**	0.460	-0.210	0.900	-0.110
		0.370	-0.513	0.490	-0.176	0.960	0.044
		0.380	-0.548	0.500	-0.208		
		0.400	-0.478	0.520	-0.212		
		0.410	-0.295	0.540	-0.212		
		0.430	-0.160	0.550	-0.178		
		0.440	-0.153	0.580	-0.184		
		0.460	-0.146	0.600	-0.220		
		0.470	-0.166	0.610	-0.247		
		0.490	-0.159	0.650	2.193**		
		0.500	-0.176	0.700	-0.461		
		0.520	-0.188	0.750	-0.422		
		0.530	-0.201	0.820	-0.583		
		0.550	-0.241	0.890	-0.065		
		0.560	-0.235	0.900	-0.017		
		0.580	-0.220	0.960	0.074		
		0.590	-0.255				
		0.600	-0.251				
		0.640	-0.463				
		0.700	-0.414				
		0.750	-0.075**				
		0.820	-0.450				
		0.870	-0.189				
		0.930	-0.034				
		0.960	0.028				
			Lower Surface				
0.020	-0.714	0.020	-0.412	0.020	-0.126	0.020	0.357
0.110	-0.504	0.060	-0.159	0.060	-0.017	0.060	-0.520
0.230	-0.285	0.090	-0.188	0.090	0.480**	0.110	-0.133
0.400	-0.094	0.120	-0.268	0.120	-0.220	0.250	-0.307
0.490	-0.088	0.200	-0.490	0.200	-0.329	0.400	-0.340
0.630	0.834**	0.260	-0.372	0.250	-0.381	0.490	-0.431
0.750	0.055	0.400	-0.194	0.400	-0.393	0.580	-0.534
0.850	0.128	0.490	-0.184	0.490	-0.135	0.650	-0.119
0.900	0.218	0.580	-0.171	0.580	-0.210	0.750	0.107
0.960	0.198	0.640	0.036	0.650	-0.084	0.830	0.263
		0.750	0.193	0.750	0.224	0.900	0.315
		0.870	0.280	0.890	0.314	0.960	0.280
		0.930	0.242	0.930	0.272		
		0.960	0.206	0.960	0.216**		
CN =	0.107		0.243		0.277		0.260

Table H-2. Continued.

Flight 217, Wing sweep = 26°, Time = 9-22-11-500, MINF = 0.900, Camber = 0/2, ALPT = 4.47, BETA = 0.86, QINF = 665.0, RNPU = 5.0E+06, CNWP = 0.3201

η = 0.93		0.76		0.59		0.40	
			Upper Surface				
x/c	CP	*x/c*	CP	*x/c*	CP	*x/c*	CP
0.020	-0.056	0.000	0.875	0.000	2.746**	0.010	-0.588
0.060	-0.290	0.020	-0.313	0.020	-0.331	0.020	-0.710
0.110	-0.252	0.040	-0.246	0.060	-1.800**	0.060	-0.567
0.200	-0.359	0.060	-0.432	0.090	-0.557	0.110	-0.624
0.230	-0.336	0.090	-0.429	0.110	-0.556	0.140	-0.659
0.400	-0.433	0.130	-0.436	0.130	-0.520	0.190	-1.764**
0.490	-0.360	0.150	-0.424	0.150	-0.511	0.250	-0.672
0.590	-0.160	0.200	-0.388	0.210	-0.530	0.400	-0.600
0.630	-0.193	0.250	-0.512	0.250	-0.563	0.490	-0.415
0.700	-0.162	0.260	-0.509	0.340	-0.634	0.580	-0.360
0.750	-0.210	0.280	-0.519	0.370	-0.650	0.650	-0.409
0.810	-0.199	0.290	-0.515	0.400	-0.618	0.700	-0.382
0.840	-0.186	0.310	-0.485	0.410	0.256**	0.750	-0.439
0.900	-0.064	0.320	-0.501	0.430	-0.627	0.800	-0.558
0.960	0.054	0.340	-0.522	0.440	-0.632	0.830	-0.569
		0.350	-0.390**	0.460	-0.627	0.900	-0.071
		0.370	-0.510	0.490	-0.503	0.960	0.036
		0.380	-0.551	0.500	-0.545		
		0.400	-0.481	0.520	-0.539		
		0.410	-0.536	0.540	-0.539		
		0.430	-0.524	0.550	-0.504		
		0.440	-0.493	0.580	-0.483		
		0.460	-0.549	0.600	-0.465		
		0.470	-0.561	0.610	-0.406		
		0.490	-0.557	0.650	2.127**		
		0.500	-0.571	0.700	-0.491		
		0.520	-0.551	0.750	-0.441		
		0.530	-0.558	0.820	-0.539		
		0.550	-0.586	0.890	-0.018		
		0.560	-0.601	0.900	0.022		
		0.580	-0.571	0.960	0.087		
		0.590	-0.600				
		0.600	-0.605				
		0.640	-0.547				
		0.700	-0.204				
		0.750	-0.091**				
		0.820	-0.190				
		0.870	-0.171				
		0.930	-0.028				
		0.960	0.041				
			Lower Surface				
0.020	-0.624	0.020	-0.383	0.020	-0.103	0.020	0.391
0.110	-0.485	0.060	-0.136	0.060	-0.002	0.060	-0.490
0.230	-0.548	0.090	-0.162	0.090	0.472**	0.110	-0.101
0.400	-0.092	0.120	-0.248	0.120	-0.196	0.250	-0.262
0.490	-0.092	0.200	-0.484	0.200	-0.290	0.400	-0.317
0.630	0.814**	0.260	-0.373	0.250	-0.372	0.490	-0.413
0.750	0.052	0.400	-0.398	0.400	-0.375	0.580	-0.531
0.850	0.124	0.490	-0.333	0.490	-0.141	0.650	-0.471
0.900	0.209	0.580	-0.115	0.580	-0.541	0.750	0.063
0.960	0.203	0.640	0.052	0.650	-0.105	0.830	0.231
		0.750	0.194	0.750	0.223	0.900	0.318
		0.870	0.282	0.890	0.326	0.960	0.276
		0.930	0.243	0.930	0.286		
		0.960	0.213	0.960	0.217**		
CN =	0.115		0.260		0.329		0.288

Table H-2. Continued.

Flight 217, Wing sweep = 26°, Time = 9-22-18-000, MINF = 0.909, Camber = 0/2, ALPT = 4.21, BETA = 0.72, QINF = 674.5, RNPU = 5.1E+06, CNWP = 0.2999

η = 0.93		0.76		0.59		0.40	
			Upper Surface				
x/c	CP	*x/c*	CP	*x/c*	CP	*x/c*	CP
0.020	0.010	0.000	0.868	0.000	2.716**	0.010	-0.568
0.060	-0.156	0.020	-0.253	0.020	-0.268	0.020	-0.654
0.110	-0.248	0.040	-0.224	0.060	-1.765**	0.060	-0.525
0.200	-0.318	0.060	-0.404	0.090	-0.499	0.110	-0.581
0.230	-0.308	0.090	-0.350	0.110	-0.507	0.140	-0.603
0.400	-0.407	0.130	-0.323	0.130	-0.462	0.190	-1.730**
0.490	-0.389	0.150	-0.357	0.150	-0.455	0.250	-0.612
0.590	-0.169	0.200	-0.313	0.210	-0.465	0.400	-0.564
0.630	-0.154	0.250	-0.434	0.250	-0.516	0.490	-0.366
0.700	-0.148	0.260	-0.442	0.340	-0.594	0.580	-0.326
0.750	-0.214	0.280	-0.457	0.370	-0.585	0.650	-0.387
0.810	-0.199	0.290	-0.453	0.400	-0.560	0.700	-0.370
0.840	-0.183	0.310	-0.439	0.410	0.262**	0.750	-0.407
0.900	-0.053	0.320	-0.458	0.430	-0.571	0.800	-0.585
0.960	0.081	0.340	-0.491	0.440	-0.526	0.830	-0.525
		0.350	-0.374**	0.460	-0.486	0.900	-0.107
		0.370	-0.491	0.490	-0.462	0.960	0.035
		0.380	-0.521	0.500	-0.503		
		0.400	-0.488	0.520	-0.518		
		0.410	-0.527	0.540	-0.523		
		0.430	-0.490	0.550	-0.477		
		0.440	-0.481	0.580	-0.402		
		0.460	-0.531	0.600	-0.364		
		0.470	-0.525	0.610	-0.323		
		0.490	-0.532	0.650	2.107**		
		0.500	-0.550	0.700	-0.449		
		0.520	-0.522	0.750	-0.430		
		0.530	-0.520	0.820	-0.516		
		0.550	-0.563	0.890	-0.016		
		0.560	-0.547	0.900	0.033		
		0.580	-0.489	0.960	0.096		
		0.590	-0.510				
		0.600	-0.528				
		0.640	-0.548				
		0.700	-0.486				
		0.750	-0.093**				
		0.820	-0.142				
		0.870	-0.145				
		0.930	0.003				
		0.960	0.054				
			Lower Surface				
0.020	-0.737	0.020	-0.402	0.020	-0.115	0.020	0.367
0.110	-0.492	0.060	-0.132	0.060	-0.015	0.060	-0.502
0.230	-0.556	0.090	-0.170	0.090	0.474**	0.110	-0.122
0.400	-0.077	0.120	-0.257	0.120	-0.212	0.250	-0.374
0.490	-0.049	0.200	-0.540	0.200	-0.344	0.400	-0.290
0.630	0.812**	0.260	-0.374	0.250	-0.402	0.490	-0.427
0.750	0.080	0.400	-0.431	0.400	-0.380	0.580	-0.542
0.850	0.148	0.490	-0.533	0.490	-0.158	0.650	-0.725
0.900	0.232	0.580	-0.082	0.580	-0.572	0.750	-0.037
0.960	0.207	0.640	0.074	0.650	-0.110	0.830	0.151
		0.750	0.214	0.750	0.128	0.900	0.301
		0.870	0.269	0.890	0.267	0.960	0.290
		0.930	0.270	0.930	0.244		
		0.960	0.235	0.960	0.223**		
CN =	0.112		0.228		0.252		0.200

Table H-2. Continued.

Flight 217, Wing sweep = 26°, Time = 9-22-20-000, MINF = 0.907, Camber = 0/2, ALPT = 4.06, BETA = 0.92, QINF = 670.8, RNPU = 5.1E+06, CNWP = 0.3037

η = 0.93		0.76		0.59		0.40	
			Upper Surface				
x/c	CP	*x/c*	CP	*x/c*	CP	*x/c*	CP
0.020	0.011	0.000	0.877	0.000	2.734**	0.010	-0.555
0.060	-0.167	0.020	-0.206	0.020	-0.255	0.020	-0.645
0.110	-0.260	0.040	-0.217	0.060	-1.771**	0.060	-0.525
0.200	-0.317	0.060	-0.392	0.090	-0.496	0.110	-0.581
0.230	-0.349	0.090	-0.354	0.110	-0.499	0.140	-0.612
0.400	-0.408	0.130	-0.313	0.130	-0.448	0.190	-1.735**
0.490	-0.404	0.150	-0.349	0.150	-0.448	0.250	-0.602
0.590	-0.147	0.200	-0.308	0.210	-0.459	0.400	-0.570
0.630	-0.168	0.250	-0.439	0.250	-0.522	0.490	-0.374
0.700	-0.151	0.260	-0.444	0.340	-0.597	0.580	-0.324
0.750	-0.212	0.280	-0.461	0.370	-0.605	0.650	-0.373
0.810	-0.197	0.290	-0.473	0.400	-0.569	0.700	-0.353
0.840	-0.180	0.310	-0.459	0.410	0.267**	0.750	-0.409
0.900	-0.057	0.320	-0.472	0.430	-0.573	0.800	-0.556
0.960	0.067	0.340	-0.496	0.440	-0.512	0.830	-0.517
		0.350	-0.391**	0.460	-0.489	0.900	-0.121
		0.370	-0.503	0.490	-0.457	0.960	0.029
		0.380	-0.529	0.500	-0.515		
		0.400	-0.515	0.520	-0.514		
		0.410	-0.519	0.540	-0.519		
		0.430	-0.504	0.550	-0.483		
		0.440	-0.495	0.580	-0.394		
		0.460	-0.527	0.600	-0.329		
		0.470	-0.537	0.610	-0.309		
		0.490	-0.530	0.650	0.860**		
		0.500	-0.541	0.700	-0.443		
		0.520	-0.541	0.750	-0.414		
		0.530	-0.529	0.820	-0.506		
		0.550	-0.556	0.890	-0.020		
		0.560	-0.525	0.900	0.020		
		0.580	-0.507	0.960	0.081		
		0.590	-0.523				
		0.600	-0.510				
		0.640	-0.539				
		0.700	-0.392				
		0.750	-0.099**				
		0.820	-0.177				
		0.870	-0.151				
		0.930	-0.016				
		0.960	0.053				
			Lower Surface				
0.020	-0.782	0.020	-0.403	0.020	-0.146	0.020	0.365
0.110	-0.493	0.060	-0.142	0.060	-0.027	0.060	-0.507
0.230	-0.565	0.090	-0.185	0.090	0.480**	0.110	-0.119
0.400	-0.077	0.120	-0.271	0.120	-0.206	0.250	-0.378
0.490	-0.060	0.200	-0.541	0.200	-0.350	0.400	-0.294
0.630	0.820**	0.260	-0.392	0.250	-0.401	0.490	-0.429
0.750	0.066	0.400	-0.428	0.400	-0.380	0.580	-0.560
0.850	0.136	0.490	-0.531	0.490	-0.155	0.650	-0.723
0.900	0.223	0.580	-0.071	0.580	-0.575	0.750	-0.027
0.960	0.215	0.640	0.072	0.650	-0.107	0.830	0.138
		0.750	0.208	0.750	0.119	0.900	0.286
		0.870	0.284	0.890	0.256	0.960	0.284
		0.930	0.261	0.930	0.258		
		0.960	0.227	0.960	0.228**		
CN =	0.112		0.220		0.249		0.195

Table H-2. Continued.

Flight 217, Wing sweep = 26°, Time = 9-22-27-000, MINF = 0.900, Camber = 0/2, ALPT = 4.42, BETA = 1.03, QINF = 658.1, RNPU = 5.0E+06, CNWP = 0.3250

η = 0.93		0.76		0.59		0.40	
			Upper Surface				
x/c	CP	*x/c*	CP	*x/c*	CP	*x/c*	CP
0.020	-0.056	0.000	0.874	0.000	2.794**	0.010	-0.587
0.060	-0.285	0.020	-0.295	0.020	-0.320	0.020	-0.701
0.110	-0.262	0.040	-0.245	0.060	-1.799**	0.060	-0.566
0.200	-0.345	0.060	-0.433	0.090	-0.564	0.110	-0.630
0.230	-0.326	0.090	-0.415	0.110	-0.552	0.140	-0.643
0.400	-0.430	0.130	-0.425	0.130	-0.511	0.190	-1.762**
0.490	-0.350	0.150	-0.418	0.150	-0.498	0.250	-0.666
0.590	-0.158	0.200	-0.382	0.210	-0.526	0.400	-0.593
0.630	-0.189	0.250	-0.511	0.250	-0.561	0.490	-0.409
0.700	-0.160	0.260	-0.505	0.340	-0.636	0.580	-0.348
0.750	-0.219	0.280	-0.508	0.370	-0.646	0.650	-0.410
0.810	-0.204	0.290	-0.505	0.400	-0.577	0.700	-0.387
0.840	-0.190	0.310	-0.478	0.410	0.278**	0.750	-0.437
0.900	-0.067	0.320	-0.490	0.430	-0.616	0.800	-0.576
0.960	0.055	0.340	-0.518	0.440	-0.626	0.830	-0.550
		0.350	-0.386**	0.460	-0.612	0.900	-0.089
		0.370	-0.501	0.490	-0.494	0.960	0.045
		0.380	-0.544	0.500	-0.539		
		0.400	-0.522	0.520	-0.537		
		0.410	-0.535	0.540	-0.541		
		0.430	-0.528	0.550	-0.507		
		0.440	-0.503	0.580	-0.475		
		0.460	-0.544	0.600	-0.443		
		0.470	-0.561	0.610	-0.379		
		0.490	-0.552	0.650	0.883**		
		0.500	-0.559	0.700	-0.467		
		0.520	-0.560	0.750	-0.429		
		0.530	-0.552	0.820	-0.526		
		0.550	-0.594	0.890	-0.028		
		0.560	-0.605	0.900	0.014		
		0.580	-0.567	0.960	0.088		
		0.590	-0.607				
		0.600	-0.598				
		0.640	-0.544				
		0.700	-0.183				
		0.750	-0.095**				
		0.820	-0.194				
		0.870	-0.176				
		0.930	-0.017				
		0.960	0.039				
			Lower Surface				
0.020	-0.638	0.020	-0.356	0.020	-0.090	0.020	0.393
0.110	-0.481	0.060	-0.130	0.060	-0.009	0.060	-0.498
0.230	-0.561	0.090	-0.170	0.090	0.496**	0.110	-0.104
0.400	-0.087	0.120	-0.250	0.120	-0.199	0.250	-0.253
0.490	-0.087	0.200	-0.482	0.200	-0.281	0.400	-0.329
0.630	0.842**	0.260	-0.383	0.250	-0.363	0.490	-0.414
0.750	0.056	0.400	-0.407	0.400	-0.387	0.580	-0.551
0.850	0.125	0.490	-0.435	0.490	-0.149	0.650	-0.527
0.900	0.215	0.580	-0.110	0.580	-0.546	0.750	0.052
0.960	0.203	0.640	0.050	0.650	-0.105	0.830	0.225
		0.750	0.193	0.750	0.218	0.900	0.312
		0.870	0.276	0.890	0.323	0.960	0.279
		0.930	0.254	0.930	0.280		
		0.960	0.212	0.960	0.239**		
CN =	0.114		0.244		0.320		0.274

Table H-2. Continued.

Flight 218, Wing sweep = 45°, Time = 10-18-15-500, MINF = 0.930, Camber = 0/2, ALPT = 6.04, BETA = 0.69, QINF = 337.2, RNPU = 2.5E+06, CNWP = 0.5016

η = 0.93		0.76		0.59		0.40	
			Upper Surface				
x/c	CP	*x/c*	CP	*x/c*	CP	*x/c*	CP
0.020	-0.162	0.000	0.895	0.000	7.229**	0.010	-0.555
0.060	-0.420	0.020	-0.371	0.020	-0.504	0.020	-0.680
0.110	-0.464	0.040	-0.448	0.060	-3.503**	0.060	-0.675
0.200	-0.513	0.060	-0.520	0.090	-0.609	0.110	-0.662
0.230	-0.384	0.090	-0.499	0.110	-0.621	0.140	-0.676
0.400	-0.473	0.130	-0.535	0.130	-0.594	0.190	-1.650**
0.490	-0.495	0.150	-0.549	0.150	-0.604	0.250	-0.732
0.590	-0.526	0.200	-0.488	0.210	-0.603	0.400	-0.587
0.630	-0.485	0.250	-0.605	0.250	-0.616	0.490	-0.557
0.700	-0.518	0.260	-0.574	0.340	-0.713	0.580	-0.425
0.750	-0.256	0.280	-0.613	0.370	-0.723	0.650	-0.476
0.810	-0.189	0.290	-0.609	0.400	-0.631	0.700	-0.458
0.840	-0.160	0.310	-0.602	0.410	-1.772**	0.750	-0.513
0.900	0.024	0.320	-0.600	0.430	-0.701	0.800	-0.658
0.960	0.070	0.340	-0.618	0.440	-0.698	0.830	-0.629
		0.350	-0.359**	0.460	-0.703	0.900	-0.248
		0.370	-0.595	0.490	-0.670	0.960	-0.178
		0.380	-0.669	0.500	-0.722		
		0.400	-0.606	0.520	-0.748		
		0.410	-0.640	0.540	-0.730		
		0.430	-0.596	0.550	-0.661		
		0.440	-0.585	0.580	-0.655		
		0.460	-0.649	0.600	-0.696		
		0.470	-0.664	0.610	-0.667		
		0.490	-0.632	0.650	1.931**		
		0.500	-0.646	0.700	-0.658		
		0.520	-0.641	0.750	-0.684		
		0.530	-0.634	0.820	-0.609		
		0.550	-0.719	0.890	-0.147		
		0.560	-0.654	0.900	-0.126		
		0.580	-0.655	0.960	-0.099		
		0.590	-0.682				
		0.600	-0.676				
		0.640	-0.699				
		0.700	-0.748				
		0.750	-0.110**				
		0.820	-0.157				
		0.870	-0.149				
		0.930	-0.132				
		0.960	-0.129				
			Lower Surface				
0.020	-0.269	0.020	-0.073	0.020	0.160	0.020	0.533
0.110	-0.323	0.060	0.026	0.060	0.186	0.060	-0.787
0.230	-0.394	0.090	-0.013	0.090	1.058**	0.110	0.084
0.400	-0.296	0.120	-0.110	0.120	-0.132	0.250	-0.169
0.490	-0.291	0.200	-0.125	0.200	-0.127	0.400	-0.176
0.630	1.903**	0.260	-0.218	0.250	-0.189	0.490	-0.296
0.750	0.017	0.400	-0.301	0.400	-0.270	0.580	-0.407
0.850	0.100	0.490	-0.393	0.490	-0.115	0.650	-0.643
0.900	0.188	0.580	-0.495	0.580	-0.429	0.750	-0.147
0.960	0.176	0.640	-0.191	0.650	-0.111	0.830	0.025
		0.750	0.084	0.750	-0.086	0.900	0.162
		0.870	0.205	0.890	0.133	0.960	0.248
		0.930	0.188	0.930	0.178		
		0.960	0.130	0.960	-1.849**		
CN =	0.196		0.377		0.454		0.347

Table H-2. Continued.

Flight 218, Wing sweep = 45°, Time = 10-18-24-500, MINF = 0.940, Camber = 0/2, ALPT = 5.73, BETA = 0.51, QINF = 337.1, RNPU = 2.5E+06, CNWP = 0.4059

η = 0.93		0.76		0.59		0.40	
			Upper Surface				
x/c	CP	*x/c*	CP	*x/c*	CP	*x/c*	CP
0.020	-0.109	0.000	0.894	0.000	7.266**	0.010	-0.504
0.060	-0.324	0.020	-0.353	0.020	-0.427	0.020	-0.622
0.110	-0.411	0.040	-0.411	0.060	-3.471**	0.060	-0.617
0.200	-0.487	0.060	-0.469	0.090	-0.514	0.110	-0.642
0.230	-0.330	0.090	-0.457	0.110	-0.583	0.140	-0.642
0.400	-0.471	0.130	-0.510	0.130	-0.531	0.190	-1.617**
0.490	-0.442	0.150	-0.503	0.150	-0.543	0.250	-0.655
0.590	-0.504	0.200	-0.450	0.210	-0.539	0.400	-0.548
0.630	-0.449	0.250	-0.564	0.250	-0.543	0.490	-0.497
0.700	-0.502	0.260	-0.511	0.340	-0.665	0.580	-0.377
0.750	-0.320	0.280	-0.550	0.370	-0.652	0.650	-0.444
0.810	-0.276	0.290	-0.550	0.400	-0.629	0.700	-0.397
0.840	-0.231	0.310	-0.561	0.410	-1.739**	0.750	-0.472
0.900	0.006	0.320	-0.567	0.430	-0.659	0.800	-0.637
0.960	0.059	0.340	-0.555	0.440	-0.641	0.830	-0.615
		0.350	-0.343**	0.460	-0.644	0.900	-0.351
		0.370	-0.532	0.490	-0.614	0.960	-0.215
		0.380	-0.622	0.500	-0.677		
		0.400	-0.535	0.520	-0.692		
		0.410	-0.607	0.540	-0.667		
		0.430	-0.578	0.550	-0.622		
		0.440	-0.539	0.580	-0.556		
		0.460	-0.611	0.600	-0.589		
		0.470	-0.604	0.610	-0.509		
		0.490	-0.587	0.650	1.966**		
		0.500	-0.557	0.700	-0.626		
		0.520	-0.563	0.750	-0.643		
		0.530	-0.582	0.820	-0.603		
		0.550	-0.636	0.890	-0.158		
		0.560	-0.609	0.900	-0.143		
		0.580	-0.581	0.960	-0.094		
		0.590	-0.649				
		0.600	-0.640				
		0.640	-0.634				
		0.700	-0.704				
		0.750	-0.143**				
		0.820	-0.289				
		0.870	-0.150				
		0.930	-0.117				
		0.960	-0.098				
			Lower Surface				
0.020	-0.206	0.020	-0.090	0.020	0.160	0.020	0.519
0.110	-0.290	0.060	0.022	0.060	0.183	0.060	-0.823
0.230	-0.399	0.090	-0.053	0.090	1.092**	0.110	0.074
0.400	-0.287	0.120	-0.146	0.120	-0.144	0.250	-0.149
0.490	-0.263	0.200	-0.123	0.200	-0.131	0.400	-0.196
0.630	1.938**	0.260	-0.222	0.250	-0.199	0.490	-0.287
0.750	-0.008	0.400	-0.289	0.400	-0.240	0.580	-0.448
0.850	0.135	0.490	-0.399	0.490	-0.142	0.650	-0.621
0.900	0.180	0.580	-0.461	0.580	-0.395	0.750	-0.210
0.960	0.170	0.640	-0.548	0.650	-0.141	0.830	-0.043
		0.750	0.002	0.750	-0.150	0.900	0.127
		0.870	0.129	0.890	0.058	0.960	0.204
		0.930	0.177	0.930	0.127		
		0.960	0.139	0.960	-1.816**		
CN =	0.186		0.301		0.385		0.295

Table H-2. Continued.

Flight 218, Wing sweep = 45°, Time = 10-18-30-500, MINF = 0.950, Camber = 0/2, ALPT = 7.03, BETA = 0.34, QINF = 341.1, RNPU = 2.5E+06, CNWP = 0.3389

η = 0.93		0.76		0.59		0.40	
			Upper Surface				
x/c	CP	*x/c*	CP	*x/c*	CP	*x/c*	CP
0.020	-0.738	0.000	0.466	0.000	7.194**	0.010	-0.831
0.060	-0.751	0.020	-0.921	0.020	-0.812	0.020	-0.880
0.110	-0.724	0.040	-0.762	0.060	-3.415**	0.060	-0.796
0.200	-0.749	0.060	-0.828	0.090	-0.826	0.110	-0.748
0.230	-0.667	0.090	-0.771	0.110	-0.890	0.140	-0.746
0.400	-0.627	0.130	-0.794	0.130	-0.801	0.190	-1.584**
0.490	-0.240	0.150	-0.802	0.150	-0.773	0.250	-0.497
0.590	-0.032	0.200	-0.714	0.210	-0.784	0.400	-0.366
0.630	0.017	0.250	-0.762	0.250	-0.708	0.490	-0.307
0.700	0.048	0.260	-0.746	0.340	-0.536	0.580	-0.346
0.750	-0.038	0.280	-0.784	0.370	-0.512	0.650	-0.385
0.810	-0.055	0.290	-0.762	0.400	-0.429	0.700	-0.412
0.840	-0.001	0.310	-0.747	0.410	-1.704**	0.750	-0.467
0.900	0.025	0.320	-0.760	0.430	-0.442	0.800	-0.596
0.960	0.091	0.340	-0.747	0.440	-0.421	0.830	-0.549
		0.350	-0.374**	0.460	-0.422	0.900	-0.723
		0.370	-0.706	0.490	-0.345	0.960	-0.333
		0.380	-0.781	0.500	-0.421		
		0.400	-0.578	0.520	-0.409		
		0.410	-0.523	0.540	-0.392		
		0.430	-0.438	0.550	-0.344		
		0.440	-0.424	0.580	-0.322		
		0.460	-0.423	0.600	-0.377		
		0.470	-0.412	0.610	-0.354		
		0.490	-0.386	0.650	1.957**		
		0.500	-0.402	0.700	-0.510		
		0.520	-0.385	0.750	-0.549		
		0.530	-0.380	0.820	-0.589		
		0.550	-0.416	0.890	-0.141		
		0.560	-0.408	0.900	-0.052		
		0.580	-0.381	0.960	-0.041		
		0.590	-0.432				
		0.600	-0.404				
		0.640	-0.473				
		0.700	-0.494				
		0.750	-0.008**				
		0.820	-0.017				
		0.870	0.002				
		0.930	0.049				
		0.960	0.057				
			Lower Surface				
0.020	-0.075	0.020	0.095	0.020	0.216	0.020	0.453
0.110	-0.142	0.060	0.077	0.060	0.175	0.060	-0.763
0.230	-0.150	0.090	-0.016	0.090	1.093**	0.110	0.113
0.400	-0.145	0.120	-0.036	0.120	-0.100	0.250	-0.077
0.490	-0.081	0.200	-0.087	0.200	-0.064	0.400	-0.102
0.630	1.929**	0.260	-0.150	0.250	-0.108	0.490	-0.227
0.750	0.031	0.400	-0.064	0.400	-0.183	0.580	-0.329
0.850	0.122	0.490	-0.121	0.490	-0.022	0.650	-0.412
0.900	0.176	0.580	-0.131	0.580	-0.294	0.750	0.014
0.960	0.210	0.640	0.047	0.650	-0.031	0.830	0.203
		0.750	0.162	0.750	0.140	0.900	0.247
		0.870	0.184	0.890	0.191	0.960	0.156
		0.930	0.162	0.930	0.154		
		0.960	0.159	0.960	-1.781**		
CN =	0.272		0.465		0.458		0.390

Table H-2. Continued.

Flight 218, Wing sweep = 45°, Time = 10-18-37-000, MINF = 0.960, Camber = 0/2, ALPT = 6.65, BETA = 0.48, QINF = 344.1, RNPU = 2.5E+06, CNWP = 0.2727

η = 0.93		0.76		0.59		0.40	
			Upper Surface				
x/c	CP	*x/c*	CP	*x/c*	CP	*x/c*	CP
0.020	-0.753	0.000	0.407	0.000	7.153**	0.010	-0.822
0.060	-0.769	0.020	-0.865	0.020	-0.833	0.020	-0.822
0.110	-0.750	0.040	-0.756	0.060	-3.365**	0.060	-0.782
0.200	-0.733	0.060	-0.797	0.090	-0.820	0.110	-0.712
0.230	-0.637	0.090	-0.763	0.110	-0.872	0.140	-0.681
0.400	-0.276	0.130	-0.788	0.130	-0.784	0.190	-1.549**
0.490	-0.179	0.150	-0.787	0.150	-0.769	0.250	-0.442
0.590	-0.100	0.200	-0.726	0.210	-0.751	0.400	-0.331
0.630	-0.017	0.250	-0.782	0.250	-0.453	0.490	-0.265
0.700	0.052	0.260	-0.727	0.340	-0.375	0.580	-0.288
0.750	-0.001	0.280	-0.753	0.370	-0.405	0.650	-0.367
0.810	0.014	0.290	-0.699	0.400	-0.351	0.700	-0.366
0.840	0.010	0.310	-0.536	0.410	-1.668**	0.750	-0.441
0.900	0.043	0.320	-0.526	0.430	-0.382	0.800	-0.517
0.960	0.105	0.340	-0.420	0.440	-0.374	0.830	-0.508
		0.350	-0.249**	0.460	-0.349	0.900	-0.635
		0.370	-0.364	0.490	-0.324	0.960	-0.378
		0.380	-0.396	0.500	-0.387		
		0.400	-0.244	0.520	-0.367		
		0.410	-0.382	0.540	-0.370		
		0.430	-0.364	0.550	-0.286		
		0.440	-0.334	0.580	-0.308		
		0.460	-0.366	0.600	-0.339		
		0.470	-0.348	0.610	-0.352		
		0.490	-0.336	0.650	1.961**		
		0.500	-0.332	0.700	-0.496		
		0.520	-0.362	0.750	-0.511		
		0.530	-0.318	0.820	-0.561		
		0.550	-0.386	0.890	-0.160		
		0.560	-0.380	0.900	-0.086		
		0.580	-0.360	0.960	-0.048		
		0.590	-0.397				
		0.600	-0.391				
		0.640	-0.464				
		0.700	-0.473				
		0.750	-0.036**				
		0.820	-0.075				
		0.870	-0.007				
		0.930	0.049				
		0.960	0.060				
			Lower Surface				
0.020	-0.092	0.020	0.014	0.020	0.224	0.020	0.420
0.110	-0.178	0.060	0.017	0.060	0.134	0.060	-0.797
0.230	-0.190	0.090	-0.054	0.090	1.105**	0.110	0.078
0.400	-0.156	0.120	-0.045	0.120	-0.133	0.250	-0.069
0.490	-0.067	0.200	-0.121	0.200	-0.075	0.400	-0.141
0.630	1.933**	0.260	-0.182	0.250	-0.147	0.490	-0.202
0.750	0.053	0.400	-0.225	0.400	-0.213	0.580	-0.333
0.850	0.115	0.490	-0.050	0.490	-0.053	0.650	-0.385
0.900	0.166	0.580	-0.093	0.580	-0.384	0.750	-0.062
0.960	0.182	0.640	0.026	0.650	-0.022	0.830	0.124
		0.750	0.111	0.750	0.114	0.900	0.166
		0.870	0.148	0.890	0.179	0.960	0.097
		0.930	0.148	0.930	0.137		
		0.960	0.123	0.960	-1.744**		
CN =	0.208		0.386		0.382		0.322

Table H-2. Continued.

Flight 218, Wing sweep = 45°, Time = 10-18-42-000, MINF = 0.970, Camber = 0/2, ALPT = 7.59, BETA = 0.37, QINF = 347.0, RNPU = 2.5E+06

η = 0.93		0.76		0.59		0.40	
			Upper Surface				
x/c	CP	*x/c*	CP	*x/c*	CP	*x/c*	CP
0.020	-1.052	0.000	0.054	0.000	7.110**	0.010	-0.991
0.060	-1.011	0.020	-1.116	0.020	-1.052	0.020	-0.966
0.110	-0.924	0.040	-0.999	0.060	-3.318**	0.060	-0.915
0.200	-0.791	0.060	-1.029	0.090	-0.958	0.110	-0.698
0.230	-0.519	0.090	-0.960	0.110	-1.023	0.140	-0.534
0.400	-0.222	0.130	-0.952	0.130	-0.917	0.190	-1.518**
0.490	-0.232	0.150	-0.944	0.150	-0.702	0.250	-0.427
0.590	-0.033	0.200	-0.880	0.210	-0.601	0.400	-0.286
0.630	-0.006	0.250	-0.575	0.250	-0.367	0.490	-0.292
0.700	0.037	0.260	-0.499	0.340	-0.345	0.580	-0.374
0.750	-0.014	0.280	-0.502	0.370	-0.367	0.650	-0.415
0.810	0.013	0.290	-0.460	0.400	-0.335	0.700	-0.385
0.840	0.037	0.310	-0.417	0.410	-1.637**	0.750	-0.349
0.900	0.043	0.320	-0.419	0.430	-0.359	0.800	-0.447
0.960	0.079	0.340	-0.352	0.440	-0.330	0.830	-0.396
		0.350	-0.198**	0.460	-0.351	0.900	-0.532
		0.370	-0.305	0.490	-0.308	0.960	-0.318
		0.380	-0.378	0.500	-0.345		
		0.400	-0.331	0.520	-0.362		
		0.410	-0.367	0.540	-0.356		
		0.430	-0.331	0.550	-0.311		
		0.440	-0.288	0.580	-0.258		
		0.460	-0.342	0.600	-0.332		
		0.470	-0.369	0.610	-0.332		
		0.490	-0.329	0.650	1.962**		
		0.500	-0.367	0.700	-0.435		
		0.520	-0.392	0.750	-0.491		
		0.530	-0.362	0.820	-0.427		
		0.550	-0.433	0.890	-0.179		
		0.560	-0.406	0.900	-0.129		
		0.580	-0.375	0.960	-0.072		
		0.590	-0.407				
		0.600	-0.381				
		0.640	-0.444				
		0.700	-0.466				
		0.750	-0.018**				
		0.820	-0.035				
		0.870	0.009				
		0.930	0.064				
		0.960	0.047				
			Lower Surface				
0.020	0.026	0.020	0.089	0.020	0.252	0.020	0.346
0.110	-0.049	0.060	0.072	0.060	0.165	0.060	-0.778
0.230	-0.062	0.090	0.008	0.090	1.113**	0.110	0.116
0.400	-0.187	0.120	0.018	0.120	-0.075	0.250	-0.037
0.490	-0.147	0.200	-0.057	0.200	-0.082	0.400	-0.080
0.630	1.935**	0.260	-0.094	0.250	-0.040	0.490	-0.122
0.750	-0.040	0.400	-0.035	0.400	-0.114	0.580	-0.219
0.850	0.074	0.490	-0.054	0.490	-0.016	0.650	-0.195
0.900	0.141	0.580	-0.056	0.580	-0.183	0.750	-0.119
0.960	0.140	0.640	0.070	0.650	-0.062	0.830	0.109
		0.750	0.090	0.750	0.100	0.900	0.138
		0.870	0.118	0.890	0.140	0.960	0.109
		0.930	0.096	0.930	0.113		
		0.960	0.074	0.960	-1.712**		

Table H-2. Continued.

Flight 218, Wing sweep = 45°, Time = 10-18-52-000, MINF = 0.980, Camber = 0/2, ALPT = 8.09, BETA = 0.45, QINF = 344.1, RNPU = 2.5E+06

η = 0.93		0.76		0.59		0.40	
			Upper Surface				
x/c	CP	*x/c*	CP	*x/c*	CP	*x/c*	CP
0.020	-1.027	0.000	-0.158	0.000	7.214**	0.010	-1.053
0.060	-0.937	0.020	-0.927	0.020	-1.156	0.020	-1.053
0.110	-0.723	0.040	-0.743	0.060	-3.303**	0.060	-0.965
0.200	-0.520	0.060	-0.766	0.090	-0.808	0.110	-0.566
0.230	-0.497	0.090	-0.735	0.110	-0.883	0.140	-0.398
0.400	-0.289	0.130	-0.714	0.130	-0.800	0.190	-1.487**
0.490	-0.231	0.150	-0.724	0.150	-0.754	0.250	-0.309
0.590	-0.174	0.200	-0.706	0.210	-0.685	0.400	-0.319
0.630	-0.106	0.250	-0.678	0.250	-0.306	0.490	-0.355
0.700	-0.042	0.260	-0.609	0.340	-0.268	0.580	-0.228
0.750	0.014	0.280	-0.669	0.370	-0.296	0.650	-0.268
0.810	0.023	0.290	-0.614	0.400	-0.260	0.700	-0.252
0.840	0.044	0.310	-0.589	0.410	-1.607**	0.750	-0.262
0.900	0.067	0.320	-0.591	0.430	-0.290	0.800	-0.323
0.960	0.099	0.340	-0.587	0.440	-0.294	0.830	-0.371
		0.350	-0.293**	0.460	-0.307	0.900	-0.153
		0.370	-0.466	0.490	-0.257	0.960	-0.046
		0.380	-0.480	0.500	-0.325		
		0.400	-0.349	0.520	-0.320		
		0.410	-0.357	0.540	-0.305		
		0.430	-0.281	0.550	-0.268		
		0.440	-0.218	0.580	-0.263		
		0.460	-0.257	0.600	-0.345		
		0.470	-0.274	0.610	-0.341		
		0.490	-0.268	0.650	2.022**		
		0.500	-0.252	0.700	-0.374		
		0.520	-0.280	0.750	-0.450		
		0.530	-0.306	0.820	-0.407		
		0.550	-0.321	0.890	-0.255		
		0.560	-0.338	0.900	-0.203		
		0.580	-0.314	0.960	-0.109		
		0.590	-0.358				
		0.600	-0.345				
		0.640	-0.331				
		0.700	-0.300				
		0.750	-0.027**				
		0.820	-0.022				
		0.870	0.009				
		0.930	0.042				
		0.960	0.048				
			Lower Surface				
0.020	0.164	0.020	0.075	0.020	0.236	0.020	0.295
0.110	0.016	0.060	0.079	0.060	0.179	0.060	-0.797
0.230	0.019	0.090	0.005	0.090	1.166**	0.110	0.118
0.400	-0.107	0.120	0.041	0.120	-0.056	0.250	-0.039
0.490	-0.099	0.200	-0.022	0.200	-0.041	0.400	-0.001
0.630	1.995**	0.260	0.000	0.250	-0.025	0.490	-0.051
0.750	-0.078	0.400	0.001	0.400	-0.109	0.580	-0.090
0.850	0.021	0.490	-0.023	0.490	-0.044	0.650	-0.148
0.900	0.095	0.580	-0.008	0.580	-0.073	0.750	-0.111
0.960	0.109	0.640	0.098	0.650	-0.059	0.830	0.043
		0.750	0.086	0.750	0.076	0.900	0.103
		0.870	0.108	0.890	0.129	0.960	-0.052
		0.930	0.078	0.930	0.114		
		0.960	0.066	0.960	-1.682**		

Table H-2. Continued.

Flight 218, Wing sweep = 45°, Time = 10-19-17-500, MINF = 0.990, Camber = 0/2, ALPT = 7.60, BETA = 0.34, QINF = 339.2, RNPU = 2.4E+06

η = 0.93		0.76		0.59		0.40	
			Upper Surface				
x/c	CP	*x/c*	CP	*x/c*	CP	*x/c*	CP
0.020	-0.969	0.000	-0.153	0.000	7.369**	0.010	-1.007
0.060	-0.714	0.020	-1.037	0.020	-1.084	0.020	-1.037
0.110	-0.524	0.040	-0.782	0.060	-3.300**	0.060	-0.886
0.200	-0.530	0.060	-0.756	0.090	-0.774	0.110	-0.569
0.230	-0.510	0.090	-0.689	0.110	-0.837	0.140	-0.376
0.400	-0.405	0.130	-0.671	0.130	-0.734	0.190	-1.459**
0.490	-0.340	0.150	-0.681	0.150	-0.708	0.250	-0.289
0.590	-0.307	0.200	-0.681	0.210	-0.596	0.400	-0.274
0.630	-0.208	0.250	-0.667	0.250	-0.232	0.490	-0.344
0.700	-0.115	0.260	-0.569	0.340	-0.284	0.580	-0.265
0.750	-0.054	0.280	-0.600	0.370	-0.304	0.650	-0.260
0.810	-0.061	0.290	-0.561	0.400	-0.289	0.700	-0.250
0.840	-0.015	0.310	-0.532	0.410	-1.580**	0.750	-0.266
0.900	-0.017	0.320	-0.529	0.430	-0.306	0.800	-0.321
0.960	0.038	0.340	-0.450	0.440	-0.288	0.830	-0.327
		0.350	-0.249**	0.460	-0.304	0.900	-0.137
		0.370	-0.352	0.490	-0.267	0.960	-0.077
		0.380	-0.366	0.500	-0.318		
		0.400	-0.263	0.520	-0.307		
		0.410	-0.303	0.540	-0.304		
		0.430	-0.287	0.550	-0.250		
		0.440	-0.219	0.580	-0.270		
		0.460	-0.283	0.600	-0.317		
		0.470	-0.297	0.610	-0.317		
		0.490	-0.287	0.650	2.102**		
		0.500	-0.290	0.700	-0.346		
		0.520	-0.316	0.750	-0.466		
		0.530	-0.288	0.820	-0.434		
		0.550	-0.352	0.890	-0.280		
		0.560	-0.350	0.900	-0.219		
		0.580	-0.320	0.960	-0.148		
		0.590	-0.348				
		0.600	-0.375				
		0.640	-0.360				
		0.700	-0.398				
		0.750	-0.052**				
		0.820	-0.104				
		0.870	-0.080				
		0.930	-0.050				
		0.960	-0.041				
			Lower Surface				
0.020	0.060	0.020	0.101	0.020	0.240	0.020	0.275
0.110	-0.021	0.060	0.062	0.060	0.182	0.060	-0.820
0.230	-0.005	0.090	-0.009	0.090	1.234**	0.110	0.197
0.400	-0.130	0.120	0.007	0.120	-0.084	0.250	-0.021
0.490	-0.079	0.200	-0.041	0.200	-0.042	0.400	-0.046
0.630	2.074**	0.260	-0.102	0.250	0.000	0.490	-0.057
0.750	-0.141	0.400	-0.031	0.400	-0.118	0.580	-0.087
0.850	-0.068	0.490	-0.047	0.490	-0.047	0.650	-0.159
0.900	-0.008	0.580	-0.028	0.580	-0.093	0.750	-0.125
0.960	0.017	0.640	0.087	0.650	-0.072	0.830	0.040
		0.750	0.073	0.750	0.061	0.900	0.114
		0.870	0.066	0.890	0.090	0.960	-0.039
		0.930	0.032	0.930	0.090		
		0.960	0.006	0.960	-1.657**		

Table H-2. Continued.

Flight 218, Wing sweep = 45°, Time = 10-19-20-500, MINF = 1.000, Camber = 0/2, ALPT = 8.73, BETA = 0.34, QINF = 348.6, RNPU = 2.5E+06

η = 0.93		0.76		0.59		0.40	
			Upper Surface				
x/c	CP	*x/c*	CP	*x/c*	CP	*x/c*	CP
0.020	-1.073	0.000	-0.188	0.000	7.161**	0.010	-1.038
0.060	-0.980	0.020	-0.767	0.020	-1.107	0.020	-1.073
0.110	-0.654	0.040	-0.703	0.060	-3.222**	0.060	-0.944
0.200	-0.562	0.060	-0.761	0.090	-0.844	0.110	-0.591
0.230	-0.593	0.090	-0.775	0.110	-0.907	0.140	-0.384
0.400	-0.367	0.130	-0.783	0.130	-0.823	0.190	-1.430**
0.490	-0.339	0.150	-0.794	0.150	-0.811	0.250	-0.333
0.590	-0.411	0.200	-0.785	0.210	-0.768	0.400	-0.337
0.630	-0.337	0.250	-0.733	0.250	-0.532	0.490	-0.418
0.700	-0.261	0.260	-0.682	0.340	-0.237	0.580	-0.280
0.750	-0.149	0.280	-0.707	0.370	-0.302	0.650	-0.271
0.810	-0.163	0.290	-0.692	0.400	-0.267	0.700	-0.256
0.840	-0.142	0.310	-0.663	0.410	-1.548**	0.750	-0.239
0.900	-0.067	0.320	-0.667	0.430	-0.297	0.800	-0.286
0.960	-0.034	0.340	-0.659	0.440	-0.279	0.830	-0.344
		0.350	-0.329**	0.460	-0.306	0.900	-0.107
		0.370	-0.603	0.490	-0.271	0.960	-0.086
		0.380	-0.650	0.500	-0.311		
		0.400	-0.541	0.520	-0.320		
		0.410	-0.568	0.540	-0.317		
		0.430	-0.469	0.550	-0.269		
		0.440	-0.393	0.580	-0.285		
		0.460	-0.397	0.600	-0.308		
		0.470	-0.370	0.610	-0.329		
		0.490	-0.261	0.650	2.035**		
		0.500	-0.245	0.700	-0.386		
		0.520	-0.260	0.750	-0.477		
		0.530	-0.254	0.820	-0.448		
		0.550	-0.296	0.890	-0.348		
		0.560	-0.300	0.900	-0.292		
		0.580	-0.320	0.960	-0.193		
		0.590	-0.299				
		0.600	-0.345				
		0.640	-0.357				
		0.700	-0.360				
		0.750	-0.043**				
		0.820	-0.107				
		0.870	-0.080				
		0.930	-0.057				
		0.960	-0.051				
			Lower Surface				
0.020	0.081	0.020	0.175	0.020	0.288	0.020	0.317
0.110	0.023	0.060	0.107	0.060	0.195	0.060	-0.747
0.230	0.025	0.090	0.037	0.090	1.190**	0.110	0.188
0.400	-0.103	0.120	0.058	0.120	-0.028	0.250	0.022
0.490	-0.127	0.200	0.018	0.200	0.002	0.400	0.013
0.630	2.008**	0.260	0.015	0.250	0.027	0.490	-0.019
0.750	-0.156	0.400	-0.012	0.400	-0.099	0.580	-0.061
0.850	-0.104	0.490	-0.005	0.490	-0.056	0.650	-0.140
0.900	-0.054	0.580	-0.009	0.580	-0.026	0.750	-0.100
0.960	-0.034	0.640	0.080	0.650	-0.057	0.830	0.079
		0.750	0.085	0.750	0.096	0.900	0.107
		0.870	0.068	0.890	0.129	0.960	-0.032
		0.930	0.033	0.930	0.084		
		0.960	-0.005	0.960	-1.623**		

Table H-2. Continued.

Flight 218, Wing sweep = 45°, Time = 10-19-25-500, MINF = 1.006, Camber = 0/2, ALPT = 8.44, BETA = 0.43, QINF = 359.4, RNPU = 2.6E+06, CNWP = 0.3436

η = 0.93		0.76		0.59		0.40	
			Upper Surface				
x/c	CP	*x/c*	CP	*x/c*	CP	*x/c*	CP
0.020	-0.828	0.000	0.310	0.000	6.919**	0.010	-0.839
0.060	-0.823	0.020	-0.920	0.020	-0.862	0.020	-0.880
0.110	-0.772	0.040	-0.817	0.060	-3.150**	0.060	-0.836
0.200	-0.779	0.060	-0.854	0.090	-0.825	0.110	-0.740
0.230	-0.684	0.090	-0.806	0.110	-0.907	0.140	-0.676
0.400	-0.666	0.130	-0.798	0.130	-0.837	0.190	-1.412**
0.490	-0.302	0.150	-0.808	0.150	-0.806	0.250	-0.411
0.590	-0.218	0.200	-0.754	0.210	-0.806	0.400	-0.317
0.630	-0.219	0.250	-0.805	0.250	-0.754	0.490	-0.234
0.700	-0.220	0.260	-0.758	0.340	-0.436	0.580	-0.276
0.750	-0.365	0.280	-0.796	0.370	-0.398	0.650	-0.404
0.810	-0.346	0.290	-0.753	0.400	-0.331	0.700	-0.427
0.840	-0.347	0.310	-0.739	0.410	-1.527**	0.750	-0.423
0.900	-0.260	0.320	-0.745	0.430	-0.335	0.800	-0.384
0.960	-0.083	0.340	-0.765	0.440	-0.327	0.830	-0.522
		0.350	-0.327**	0.460	-0.312	0.900	-0.568
		0.370	-0.582	0.490	-0.268	0.960	-0.507
		0.380	-0.543	0.500	-0.319		
		0.400	-0.455	0.520	-0.302		
		0.410	-0.455	0.540	-0.307		
		0.430	-0.417	0.550	-0.276		
		0.440	-0.356	0.580	-0.263		
		0.460	-0.385	0.600	-0.332		
		0.470	-0.368	0.610	-0.332		
		0.490	-0.336	0.650	1.948**		
		0.500	-0.333	0.700	-0.390		
		0.520	-0.343	0.750	-0.439		
		0.530	-0.314	0.820	-0.480		
		0.550	-0.352	0.890	-0.269		
		0.560	-0.335	0.900	-0.210		
		0.580	-0.315	0.960	-0.148		
		0.590	-0.319				
		0.600	-0.332				
		0.640	-0.367				
		0.700	-0.411				
		0.750	-0.038**				
		0.820	-0.369				
		0.870	-0.352				
		0.930	-0.182				
		0.960	-0.151				
			Lower Surface				
0.020	0.107	0.020	0.282	0.020	0.370	0.020	0.524
0.110	-0.033	0.060	0.177	0.060	0.290	0.060	-0.666
0.230	-0.076	0.090	0.108	0.090	1.129**	0.110	0.245
0.400	-0.132	0.120	0.102	0.120	0.008	0.250	0.066
0.490	-0.109	0.200	0.026	0.200	0.007	0.400	0.007
0.630	1.922**	0.260	-0.049	0.250	0.022	0.490	-0.076
0.750	-0.135	0.400	-0.105	0.400	-0.099	0.580	-0.219
0.850	-0.079	0.490	-0.020	0.490	-0.031	0.650	-0.221
0.900	0.000	0.580	-0.030	0.580	-0.247	0.750	-0.002
0.960	-0.005	0.640	0.051	0.650	-0.048	0.830	0.224
		0.750	0.095	0.750	0.154	0.900	0.237
		0.870	0.112	0.890	0.183	0.960	0.160
		0.930	0.041	0.930	0.133		
		0.960	-0.017	0.960	-1.599**		
CN =	0.365		0.525		0.473		0.436

Table H-2. Continued.

Flight 218, Wing sweep = 45°, Time = 10-20-12-000, MINF = 1.050, Camber = 0/2, ALPT = 6.76, BETA = 0.45, QINF = 410.3, RNPU = 2.9E+06

η = 0.93		0.76		0.59		0.40	
			Upper Surface				
x/c	CP	*x/c*	CP	*x/c*	CP	*x/c*	CP
0.020	-0.890	0.000	0.047	0.000	6.002**	0.010	-0.818
0.060	-0.595	0.020	-0.945	0.020	-0.890	0.020	-0.828
0.110	-0.543	0.040	-0.839	0.060	-2.818**	0.060	-0.642
0.200	-0.425	0.060	-0.643	0.090	-0.541	0.110	-0.406
0.230	-0.304	0.090	-0.557	0.110	-0.602	0.140	-0.281
0.400	-0.180	0.130	-0.536	0.130	-0.522	0.190	-1.296**
0.490	-0.180	0.150	-0.524	0.150	-0.425	0.250	-0.184
0.590	-0.224	0.200	-0.472	0.210	-0.275	0.400	-0.176
0.630	-0.218	0.250	-0.288	0.250	-0.147	0.490	-0.246
0.700	-0.200	0.260	-0.227	0.340	-0.201	0.580	-0.139
0.750	-0.125	0.280	-0.231	0.370	-0.230	0.650	-0.170
0.810	-0.116	0.290	-0.222	0.400	-0.221	0.700	-0.157
0.840	-0.118	0.310	-0.210	0.410	-1.396**	0.750	-0.201
0.900	-0.075	0.320	-0.220	0.430	-0.214	0.800	-0.282
0.960	-0.007	0.340	-0.229	0.440	-0.197	0.830	-0.249
		0.350	-0.125**	0.460	-0.210	0.900	-0.376
		0.370	-0.201	0.490	-0.159	0.960	-0.010
		0.380	-0.244	0.500	-0.218		
		0.400	-0.175	0.520	-0.204		
		0.410	-0.235	0.540	-0.201		
		0.430	-0.229	0.550	-0.195		
		0.440	-0.165	0.580	-0.191		
		0.460	-0.221	0.600	-0.238		
		0.470	-0.234	0.610	-0.212		
		0.490	-0.213	0.650	1.648**		
		0.500	-0.230	0.700	-0.263		
		0.520	-0.189	0.750	-0.335		
		0.530	-0.248	0.820	-0.370		
		0.550	-0.273	0.890	-0.216		
		0.560	-0.253	0.900	-0.129		
		0.580	-0.214	0.960	-0.077		
		0.590	-0.255				
		0.600	-0.271				
		0.640	-0.277				
		0.700	-0.329				
		0.750	0.004**				
		0.820	-0.099				
		0.870	-0.059				
		0.930	-0.013				
		0.960	-0.005				
			Lower Surface				
0.020	0.013	0.020	0.177	0.020	0.243	0.020	0.305
0.110	-0.035	0.060	0.107	0.060	0.180	0.060	-0.644
0.230	0.043	0.090	0.059	0.090	0.930**	0.110	0.109
0.400	-0.071	0.120	0.098	0.120	-0.031	0.250	-0.004
0.490	-0.021	0.200	0.024	0.200	0.005	0.400	0.002
0.630	1.408**	0.260	-0.050	0.250	-0.006	0.490	-0.025
0.750	-0.097	0.400	-0.121	0.400	-0.053	0.580	-0.119
0.850	-0.037	0.490	-0.022	0.490	-0.015	0.650	-0.103
0.900	0.016	0.580	-0.006	0.580	-0.186	0.750	-0.059
0.960	0.022	0.640	0.093	0.650	-0.036	0.830	0.084
		0.750	0.135	0.750	0.088	0.900	0.160
		0.870	0.120	0.890	0.133	0.960	0.003
		0.930	0.093	0.930	0.104		
		0.960	0.063	0.960	-1.459**		

Table H-2. Continued.

Flight 218, Wing sweep = 45°, Time = 10-20-23-500, MINF = 1.100, Camber = 0/2, ALPT = 7.28, BETA = 0.14, QINF = 465.0, RNPU = 3.2E+06

η = 0.93		0.76		0.59		0.40	
			Upper Surface				
x/c	CP	*x/c*	CP	*x/c*	CP	*x/c*	CP
0.020	-0.854	0.000	0.032	0.000	5.258**	0.010	-0.787
0.060	-0.533	0.020	-0.897	0.020	-0.844	0.020	-0.799
0.110	-0.481	0.040	-0.614	0.060	-2.525**	0.060	-0.689
0.200	-0.442	0.060	-0.589	0.090	-0.540	0.110	-0.449
0.230	-0.389	0.090	-0.544	0.110	-0.597	0.140	-0.319
0.400	-0.238	0.130	-0.521	0.130	-0.542	0.190	-1.181**
0.490	-0.206	0.150	-0.519	0.150	-0.528	0.250	-0.177
0.590	-0.209	0.200	-0.498	0.210	-0.445	0.400	-0.207
0.630	-0.189	0.250	-0.428	0.250	-0.132	0.490	-0.239
0.700	-0.176	0.260	-0.360	0.340	-0.146	0.580	-0.097
0.750	-0.114	0.280	-0.355	0.370	-0.190	0.650	-0.151
0.810	-0.122	0.290	-0.307	0.400	-0.154	0.700	-0.163
0.840	-0.098	0.310	-0.267	0.410	-1.270**	0.750	-0.156
0.900	-0.060	0.320	-0.282	0.430	-0.204	0.800	-0.199
0.960	-0.044	0.340	-0.238	0.440	-0.171	0.830	-0.226
		0.350	-0.125**	0.460	-0.188	0.900	-0.065
		0.370	-0.196	0.490	-0.137	0.960	-0.007
		0.380	-0.224	0.500	-0.198		
		0.400	-0.156	0.520	-0.193		
		0.410	-0.202	0.540	-0.193		
		0.430	-0.178	0.550	-0.168		
		0.440	-0.137	0.580	-0.125		
		0.460	-0.189	0.600	-0.201		
		0.470	-0.204	0.610	-0.211		
		0.490	-0.177	0.650	1.416**		
		0.500	-0.198	0.700	-0.236		
		0.520	-0.198	0.750	-0.309		
		0.530	-0.197	0.820	-0.347		
		0.550	-0.231	0.890	-0.255		
		0.560	-0.225	0.900	-0.203		
		0.580	-0.213	0.960	-0.090		
		0.590	-0.241				
		0.600	-0.241				
		0.640	-0.259				
		0.700	-0.288				
		0.750	0.000**				
		0.820	-0.077				
		0.870	-0.049				
		0.930	-0.008				
		0.960	-0.007				
			Lower Surface				
0.020	0.053	0.020	0.204	0.020	0.248	0.020	0.325
0.110	0.008	0.060	0.124	0.060	0.191	0.060	-0.565
0.230	-0.015	0.090	0.032	0.090	0.782**	0.110	0.160
0.400	-0.038	0.120	0.066	0.120	-0.022	0.250	-0.003
0.490	-0.049	0.200	0.099	0.200	0.016	0.400	0.004
0.630	1.204**	0.260	-0.004	0.250	0.038	0.490	-0.018
0.750	-0.098	0.400	-0.077	0.400	-0.042	0.580	-0.065
0.850	-0.032	0.490	-0.028	0.490	0.001	0.650	-0.078
0.900	0.016	0.580	0.000	0.580	-0.142	0.750	-0.037
0.960	0.012	0.640	0.109	0.650	-0.013	0.830	0.062
		0.750	0.144	0.750	0.099	0.900	0.124
		0.870	0.128	0.890	0.129	0.960	0.001
		0.930	0.101	0.930	0.118		
		0.960	0.071	0.960	-1.326**		

Table H-2. Continued.

Flight 218, Wing sweep = 45°, Time = 10-20-39-000, MINF = 1.151, Camber = 0/2, ALPT = 5.88, BETA = 0.28, QINF = 523.0, RNPU = 3.5E+06

η = 0.93		0.76		0.59		0.40	
			Upper Surface				
x/c	CP	*x/c*	CP	*x/c*	CP	*x/c*	CP
0.020	-0.669	0.000	0.122	0.000	4.647**	0.010	-0.641
0.060	-0.644	0.020	-0.752	0.020	-0.692	0.020	-0.647
0.110	-0.381	0.040	-0.658	0.060	-2.273**	0.060	-0.561
0.200	-0.254	0.060	-0.676	0.090	-0.637	0.110	-0.419
0.230	-0.154	0.090	-0.622	0.110	-0.673	0.140	-0.318
0.400	-0.106	0.130	-0.389	0.130	-0.488	0.190	-1.078**
0.490	-0.127	0.150	-0.391	0.150	-0.374	0.250	-0.161
0.590	-0.170	0.200	-0.365	0.210	-0.266	0.400	-0.123
0.630	-0.176	0.250	-0.174	0.250	-0.093	0.490	-0.146
0.700	-0.176	0.260	-0.116	0.340	-0.132	0.580	-0.082
0.750	-0.237	0.280	-0.153	0.370	-0.140	0.650	-0.131
0.810	-0.231	0.290	-0.148	0.400	-0.144	0.700	-0.120
0.840	-0.227	0.310	-0.145	0.410	-1.157**	0.750	-0.146
0.900	-0.111	0.320	-0.161	0.430	-0.154	0.800	-0.162
0.960	-0.071	0.340	-0.153	0.440	-0.136	0.830	-0.184
		0.350	-0.085**	0.460	-0.151	0.900	-0.056
		0.370	-0.143	0.490	-0.125	0.960	-0.040
		0.380	-0.169	0.500	-0.156		
		0.400	-0.115	0.520	-0.152		
		0.410	-0.150	0.540	-0.136		
		0.430	-0.141	0.550	-0.113		
		0.440	-0.119	0.580	-0.121		
		0.460	-0.137	0.600	-0.157		
		0.470	-0.160	0.610	-0.164		
		0.490	-0.147	0.650	1.231**		
		0.500	-0.158	0.700	-0.215		
		0.520	-0.156	0.750	-0.259		
		0.530	-0.167	0.820	-0.285		
		0.550	-0.199	0.890	-0.260		
		0.560	-0.191	0.900	-0.163		
		0.580	-0.174	0.960	-0.074		
		0.590	-0.203				
		0.600	-0.200				
		0.640	-0.218				
		0.700	-0.248				
		0.750	-0.020**				
		0.820	-0.149				
		0.870	-0.080				
		0.930	-0.012				
		0.960	-0.005				
			Lower Surface				
0.020	0.022	0.020	0.104	0.020	0.165	0.020	0.311
0.110	-0.030	0.060	0.080	0.060	0.150	0.060	-0.485
0.230	-0.033	0.090	-0.018	0.090	0.668**	0.110	0.105
0.400	-0.192	0.120	0.018	0.120	-0.066	0.250	-0.026
0.490	-0.046	0.200	0.029	0.200	-0.048	0.400	-0.041
0.630	1.043**	0.260	-0.042	0.250	-0.018	0.490	-0.075
0.750	-0.071	0.400	-0.065	0.400	-0.054	0.580	-0.102
0.850	-0.041	0.490	-0.154	0.490	-0.033	0.650	-0.115
0.900	0.001	0.580	-0.118	0.580	-0.146	0.750	-0.052
0.960	-0.002	0.640	0.052	0.650	-0.033	0.830	0.010
		0.750	0.108	0.750	0.085	0.900	0.083
		0.870	0.091	0.890	0.107	0.960	-0.022
		0.930	0.085	0.930	0.094		
		0.960	0.056	0.960	-1.207**		

Table H-2. Continued.

Flight 218, Wing sweep = 45°, Time = 10-20-53-500, MINF = 1.200, Camber = 0/2, ALPT = 7.09, BETA = 0.19, QINF = 585.5, RNPU = 3.8E+06

η = 0.93		0.76		0.59		0.40	
			Upper Surface				
x/c	CP	*x/c*	CP	*x/c*	CP	*x/c*	CP
0.020	-0.671	0.000	0.112	0.000	4.122**	0.010	-0.624
0.060	-0.637	0.020	-0.734	0.020	-0.677	0.020	-0.663
0.110	-0.618	0.040	-0.645	0.060	-2.059**	0.060	-0.601
0.200	-0.560	0.060	-0.679	0.090	-0.629	0.110	-0.518
0.230	-0.340	0.090	-0.616	0.110	-0.673	0.140	-0.389
0.400	-0.164	0.130	-0.619	0.130	-0.617	0.190	-0.992**
0.490	-0.107	0.150	-0.607	0.150	-0.561	0.250	-0.226
0.590	-0.114	0.200	-0.571	0.210	-0.455	0.400	-0.182
0.630	-0.124	0.250	-0.353	0.250	-0.279	0.490	-0.240
0.700	-0.132	0.260	-0.324	0.340	-0.134	0.580	-0.082
0.750	-0.226	0.280	-0.331	0.370	-0.160	0.650	-0.131
0.810	-0.199	0.290	-0.327	0.400	-0.136	0.700	-0.118
0.840	-0.225	0.310	-0.304	0.410	-1.062**	0.750	-0.127
0.900	-0.088	0.320	-0.306	0.430	-0.135	0.800	-0.170
0.960	-0.034	0.340	-0.277	0.440	-0.142	0.830	-0.187
		0.350	-0.145**	0.460	-0.155	0.900	-0.067
		0.370	-0.203	0.490	-0.126	0.960	-0.029
		0.380	-0.204	0.500	-0.167		
		0.400	-0.134	0.520	-0.161		
		0.410	-0.157	0.540	-0.160		
		0.430	-0.130	0.550	-0.123		
		0.440	-0.103	0.580	-0.138		
		0.460	-0.122	0.600	-0.153		
		0.470	-0.143	0.610	-0.156		
		0.490	-0.127	0.650	1.071**		
		0.500	-0.146	0.700	-0.205		
		0.520	-0.155	0.750	-0.265		
		0.530	-0.156	0.820	-0.301		
		0.550	-0.186	0.890	-0.336		
		0.560	-0.184	0.900	-0.239		
		0.580	-0.173	0.960	-0.113		
		0.590	-0.192				
		0.600	-0.202				
		0.640	-0.222				
		0.700	-0.242				
		0.750	-0.023**				
		0.820	-0.125				
		0.870	-0.051				
		0.930	-0.032				
		0.960	-0.024				
			Lower Surface				
0.020	0.068	0.020	0.141	0.020	0.199	0.020	0.328
0.110	0.014	0.060	0.124	0.060	0.185	0.060	-0.384
0.230	0.017	0.090	0.028	0.090	0.568**	0.110	0.151
0.400	-0.139	0.120	0.058	0.120	-0.017	0.250	0.020
0.490	-0.053	0.200	0.058	0.200	-0.005	0.400	-0.003
0.630	0.902**	0.260	0.002	0.250	0.024	0.490	-0.018
0.750	-0.055	0.400	-0.048	0.400	-0.021	0.580	-0.070
0.850	-0.023	0.490	-0.100	0.490	-0.020	0.650	-0.057
0.900	0.006	0.580	-0.188	0.580	-0.105	0.750	-0.026
0.960	0.013	0.640	0.066	0.650	-0.026	0.830	0.010
		0.750	0.119	0.750	0.092	0.900	0.060
		0.870	0.103	0.890	0.126	0.960	-0.006
		0.930	0.074	0.930	0.092		
		0.960	0.046	0.960	-1.107**		

Table H-2. Continued.

Flight 218, Wing sweep = 45°, Time = 10-20-56-500, MINF = 1.205, Camber = 0/2, ALPT = 6.35, BETA = 0.19, QINF = 589.8, RNPU = 3.9E+06

η = 0.93		0.76		0.59		0.40	
			Upper Surface				
x/c	CP	*x/c*	CP	*x/c*	CP	*x/c*	CP
0.020	-0.611	0.000	0.141	0.000	4.093**	0.010	-0.594
0.060	-0.600	0.020	-0.695	0.020	-0.651	0.020	-0.618
0.110	-0.591	0.040	-0.604	0.060	-2.042**	0.060	-0.542
0.200	-0.456	0.060	-0.628	0.090	-0.583	0.110	-0.466
0.230	-0.271	0.090	-0.578	0.110	-0.619	0.140	-0.345
0.400	-0.092	0.130	-0.577	0.130	-0.572	0.190	-0.983**
0.490	-0.061	0.150	-0.571	0.150	-0.549	0.250	-0.230
0.590	-0.117	0.200	-0.530	0.210	-0.442	0.400	-0.147
0.630	-0.119	0.250	-0.305	0.250	-0.201	0.490	-0.177
0.700	-0.134	0.260	-0.269	0.340	-0.134	0.580	-0.070
0.750	-0.228	0.280	-0.272	0.370	-0.152	0.650	-0.120
0.810	-0.229	0.290	-0.241	0.400	-0.129	0.700	-0.104
0.840	-0.229	0.310	-0.208	0.410	-1.053**	0.750	-0.120
0.900	-0.098	0.320	-0.206	0.430	-0.138	0.800	-0.173
0.960	-0.061	0.340	-0.168	0.440	-0.125	0.830	-0.188
		0.350	-0.089**	0.460	-0.130	0.900	-0.065
		0.370	-0.129	0.490	-0.104	0.960	-0.036
		0.380	-0.140	0.500	-0.147		
		0.400	-0.103	0.520	-0.144		
		0.410	-0.141	0.540	-0.133		
		0.430	-0.120	0.550	-0.114		
		0.440	-0.115	0.580	-0.129		
		0.460	-0.131	0.600	-0.148		
		0.470	-0.141	0.610	-0.152		
		0.490	-0.131	0.650	1.064**		
		0.500	-0.139	0.700	-0.198		
		0.520	-0.139	0.750	-0.242		
		0.530	-0.144	0.820	-0.277		
		0.550	-0.171	0.890	-0.307		
		0.560	-0.169	0.900	-0.203		
		0.580	-0.160	0.960	-0.117		
		0.590	-0.184				
		0.600	-0.188				
		0.640	-0.202				
		0.700	-0.226				
		0.750	-0.032**				
		0.820	-0.145				
		0.870	-0.082				
		0.930	-0.027				
		0.960	-0.010				
			Lower Surface				
0.020	0.064	0.020	0.115	0.020	0.165	0.020	0.268
0.110	-0.009	0.060	0.098	0.060	0.164	0.060	-0.424
0.230	-0.017	0.090	0.017	0.090	0.565**	0.110	0.151
0.400	-0.144	0.120	0.000	0.120	-0.054	0.250	0.026
0.490	-0.160	0.200	0.028	0.200	-0.021	0.400	-0.023
0.630	0.897**	0.260	-0.013	0.250	-0.004	0.490	-0.058
0.750	-0.049	0.400	-0.066	0.400	-0.048	0.580	-0.096
0.850	-0.030	0.490	-0.103	0.490	-0.011	0.650	-0.077
0.900	0.006	0.580	-0.197	0.580	-0.135	0.750	-0.041
0.960	0.010	0.640	0.046	0.650	-0.024	0.830	-0.003
		0.750	0.104	0.750	0.089	0.900	0.059
		0.870	0.103	0.890	0.108	0.960	-0.028
		0.930	0.074	0.930	0.074		
		0.960	0.044	0.960	-1.097**		

Table H-2. Continued.

Flight 218, Wing sweep = 45°, Time = 10-21-7-500, MINF = 1.233, Camber = 0/2, ALPT = 4.63, BETA = 0.28, QINF = 615.3, RNPU = 4.0E+06

η = 0.93		0.76		0.59		0.40	
			Upper Surface				
x/c	CP	*x/c*	CP	*x/c*	CP	*x/c*	CP
0.020	-0.495	0.000	0.222	0.000	3.927**	0.010	-0.471
0.060	-0.444	0.020	-0.548	0.020	-0.505	0.020	-0.481
0.110	-0.437	0.040	-0.448	0.060	-1.955**	0.060	-0.421
0.200	-0.159	0.060	-0.507	0.090	-0.458	0.110	-0.358
0.230	-0.042	0.090	-0.453	0.110	-0.482	0.140	-0.269
0.400	-0.045	0.130	-0.454	0.130	-0.399	0.190	-0.940**
0.490	-0.046	0.150	-0.431	0.150	-0.289	0.250	-0.177
0.590	-0.086	0.200	-0.350	0.210	-0.286	0.400	-0.094
0.630	-0.099	0.250	-0.135	0.250	-0.130	0.490	-0.070
0.700	-0.106	0.260	-0.098	0.340	-0.096	0.580	-0.055
0.750	-0.199	0.280	-0.105	0.370	-0.094	0.650	-0.091
0.810	-0.199	0.290	-0.103	0.400	-0.071	0.700	-0.078
0.840	-0.196	0.310	-0.088	0.410	-1.006**	0.750	-0.094
0.900	-0.107	0.320	-0.096	0.430	-0.080	0.800	-0.113
0.960	-0.042	0.340	-0.086	0.440	-0.083	0.830	-0.154
		0.350	-0.066**	0.460	-0.085	0.900	-0.033
		0.370	-0.083	0.490	-0.094	0.960	-0.026
		0.380	-0.104	0.500	-0.088		
		0.400	-0.047	0.520	-0.092		
		0.410	-0.096	0.540	-0.092		
		0.430	-0.080	0.550	-0.060		
		0.440	-0.049	0.580	-0.052		
		0.460	-0.076	0.600	-0.087		
		0.470	-0.087	0.610	-0.099		
		0.490	-0.082	0.650	1.023**		
		0.500	-0.105	0.700	-0.139		
		0.520	-0.098	0.750	-0.183		
		0.530	-0.092	0.820	-0.208		
		0.550	-0.121	0.890	-0.242		
		0.560	-0.109	0.900	-0.165		
		0.580	-0.111	0.960	-0.057		
		0.590	-0.133				
		0.600	-0.132				
		0.640	-0.148				
		0.700	-0.167				
		0.750	-0.016**				
		0.820	-0.120				
		0.870	-0.135				
		0.930	-0.006				
		0.960	0.025				
			Lower Surface				
0.020	0.003	0.020	0.089	0.020	0.138	0.020	0.242
0.110	-0.040	0.060	0.068	0.060	0.126	0.060	-0.461
0.230	-0.035	0.090	-0.018	0.090	0.544**	0.110	0.040
0.400	-0.125	0.120	-0.014	0.120	-0.069	0.250	0.018
0.490	-0.144	0.200	0.001	0.200	-0.050	0.400	-0.027
0.630	0.863**	0.260	-0.057	0.250	-0.034	0.490	-0.077
0.750	-0.030	0.400	-0.082	0.400	-0.094	0.580	-0.107
0.850	-0.005	0.490	-0.119	0.490	-0.027	0.650	-0.086
0.900	0.031	0.580	-0.174	0.580	-0.145	0.750	-0.069
0.960	0.023	0.640	0.008	0.650	-0.024	0.830	-0.003
		0.750	0.092	0.750	0.070	0.900	0.085
		0.870	0.110	0.890	0.120	0.960	-0.011
		0.930	0.096	0.930	0.081		
		0.960	0.077	0.960	-1.049**		

Table H-2. Continued.

Flight 194, Wing sweep = 58°, Time = 12-5-0-000, MINF = 0.884, Camber = 0/2, ALPT = 8.85, BETA = -0.30, QINF = 304.1, RNPU = 2.3E+06

η = 0.93		0.76		0.59		0.40	
			Upper Surface				
x/c	CP	*x/c*	CP	*x/c*	CP	*x/c*	CP
0.020	-0.864	0.000	-0.393	0.000	-4.314	0.010	-1.546
0.060	-0.688	0.020	-0.772	0.020	-0.888	0.020	-1.486
0.110	-0.341	0.040	-0.695	0.060	-0.867	0.060	-1.284
0.200	-0.374	0.060	-0.699	0.090	-0.716	0.110	-0.531
0.230	-0.294	0.090	-0.708	0.110	-0.702	0.140	-0.311
0.400	-0.177	0.130	-0.740	0.130	-0.706	0.190	-5.348
0.490	-0.192	0.150	-0.705	0.150	-0.676	0.250	-0.257
0.590	-0.154	0.200	-0.671	0.210	-0.788	0.400	-0.392
0.630	-0.134	0.250	-0.527	0.250	-0.606	0.490	-0.467
0.700	-0.095	0.260	-0.473	0.340	-0.236	0.580	-0.266
0.750	-0.045	0.280	-0.442	0.370	-0.205	0.650	-0.259
0.810	-0.071	0.290	-0.403	0.400	-0.222	0.700	-0.227
0.840	-0.057	0.310	-0.344	0.410	-0.197	0.750	-0.279
0.900	-0.020	0.320	-0.336	0.430	-0.204	0.800	-0.162
0.960	-0.013	0.340	-0.339	0.440	-0.203	0.830	-0.213
		0.350	-0.121	0.460	0.046	0.900	-0.013
		0.370	-0.288	0.490	-0.135	0.960	-0.002
		0.380	-0.268	0.500	-0.185		
		0.400	-0.223	0.520	-0.182		
		0.410	-0.263	0.540	-0.165		
		0.430	-0.250	0.550	-0.166		
		0.440	-0.228	0.580	-0.155		
		0.460	-0.259	0.600	-0.165		
		0.470	-0.242	0.610	-0.080		
		0.490	-0.225	0.650	-2.662		
		0.500	-0.222	0.700	-0.157		
		0.520	-0.206	0.750	-0.156		
		0.530	-0.192	0.820	-0.205		
		0.550	-0.175	0.890	-0.047		
		0.560	-0.145	0.900	-0.063		
		0.580	-0.123	0.960	-0.002		
		0.590	-0.122				
		0.600	-0.123				
		0.640	-2.503				
		0.700	-0.027				
		0.750	-0.006				
		0.820	-2.667				
		0.870	0.017				
		0.930	0.031				
		0.960	0.038				
			Lower Surface				
0.020	0.177	0.020	0.272	0.020	0.262	0.020	0.277
0.110	0.017	0.060	0.202	0.060	0.231	0.060	6.547
0.230	-0.010	0.090	0.156	0.090	0.156	0.110	0.092
0.400	-0.037	0.120	0.153	0.120	0.001	0.250	0.027
0.490	-0.037	0.200	0.148	0.200	0.055	0.400	0.018
0.630	1.926	0.260	0.078	0.250	0.058	0.490	-0.012
0.750	0.000	0.400	-2.691	0.400	0.026	0.580	-0.063
0.850	0.010	0.490	0.038	0.490	0.002	0.650	-0.029
0.900	0.042	0.580	0.070	0.580	0.017	0.750	0.046
0.960	0.043	0.640	0.297	0.650	0.089	0.830	0.152
		0.750	0.059	0.750	0.182	0.900	0.238
		0.870	0.077	0.890	******	0.960	-0.016
		0.930	0.083	0.930	0.154		
		0.960	0.023	0.960	-2.560		

Table H-2. Continued.

Flight 194, Wing sweep = 58°, Time = 12-5-2-500, MINF = 0.890, Camber = 0/2, ALPT = 8.96, BETA = 0.18, QINF = 308.3, RNPU = 2.4E+06

η = 0.93		0.76		0.59		0.40	
			Upper Surface				
x/c	CP	*x/c*	CP	*x/c*	CP	*x/c*	CP
0.020	-0.883	0.000	-0.380	0.000	-4.256	0.010	-1.515
0.060	-0.732	0.020	-0.798	0.020	-0.749	0.020	-1.487
0.110	-0.303	0.040	-0.709	0.060	-0.824	0.060	-1.256
0.200	-0.394	0.060	-0.779	0.090	-0.737	0.110	-0.610
0.230	-0.362	0.090	-0.825	0.110	-0.763	0.140	-0.370
0.400	-0.226	0.130	-0.858	0.130	-0.873	0.190	-5.277
0.490	-0.196	0.150	-0.827	0.150	-0.869	0.250	-0.281
0.590	-0.111	0.200	-0.775	0.210	-0.971	0.400	-0.332
0.630	-0.095	0.250	-0.444	0.250	-0.598	0.490	-0.479
0.700	-0.072	0.260	-0.314	0.340	-0.278	0.580	-0.329
0.750	-0.033	0.280	-0.331	0.370	-0.217	0.650	-0.316
0.810	-0.051	0.290	-0.296	0.400	-0.204	0.700	-0.275
0.840	-0.042	0.310	-0.265	0.410	-0.179	0.750	-0.314
0.900	-0.012	0.320	-0.260	0.430	-0.201	0.800	-0.160
0.960	-0.013	0.340	-0.266	0.440	-0.210	0.830	-0.210
		0.350	-0.094	0.460	0.040	0.900	-0.013
		0.370	-0.263	0.490	-0.169	0.960	-0.002
		0.380	-0.260	0.500	-0.192		
		0.400	-0.231	0.520	-0.179		
		0.410	-0.284	0.540	-0.176		
		0.430	-0.304	0.550	-0.164		
		0.440	-0.266	0.580	-0.144		
		0.460	-0.297	0.600	-0.157		
		0.470	-0.283	0.610	-0.078		
		0.490	-0.249	0.650	-2.626		
		0.500	-0.235	0.700	-0.154		
		0.520	-0.233	0.750	-0.146		
		0.530	-0.207	0.820	-0.198		
		0.550	-0.198	0.890	-0.082		
		0.560	-0.173	0.900	-0.096		
		0.580	-0.146	0.960	-0.017		
		0.590	-0.141				
		0.600	-0.150				
		0.640	-2.469				
		0.700	-0.041				
		0.750	-0.013				
		0.820	-2.631				
		0.870	0.010				
		0.930	0.041				
		0.960	0.038				
			Lower Surface				
0.020	0.175	0.020	0.265	0.020	0.273	0.020	0.286
0.110	0.017	0.060	0.207	0.060	0.241	0.060	6.460
0.230	-0.010	0.090	0.160	0.090	0.159	0.110	0.091
0.400	-0.036	0.120	0.151	0.120	0.009	0.250	0.027
0.490	-0.036	0.200	0.149	0.200	0.061	0.400	0.015
0.630	1.900	0.260	0.084	0.250	0.057	0.490	-0.015
0.750	0.000	0.400	-2.655	0.400	0.026	0.580	-0.062
0.850	0.007	0.490	0.041	0.490	0.002	0.650	-0.029
0.900	0.031	0.580	0.065	0.580	0.014	0.750	0.046
0.960	0.043	0.640	0.293	0.650	0.088	0.830	0.159
		0.750	0.063	0.750	0.187	0.900	0.244
		0.870	0.090	0.890	******	0.960	-0.022
		0.930	0.085	0.930	0.152		
		0.960	0.026	0.960	-2.526		

Table H-2. Continued.

Flight 194, Wing sweep = 58°, Time = 12-5-6-000, MINF = 0.900, Camber = 0/2, ALPT = 8.54, BETA = 0.47, QINF = 315.2, RNPU = 2.4E+06

η = 0.93		0.76		0.59		0.40	
			Upper Surface				
x/c	CP	*x/c*	CP	*x/c*	CP	*x/c*	CP
0.020	-0.929	0.000	-0.321	0.000	-4.161	0.010	-1.465
0.060	-0.886	0.020	-0.952	0.020	-0.739	0.020	-1.413
0.110	-0.266	0.040	-0.817	0.060	-0.800	0.060	-1.151
0.200	-0.373	0.060	-0.878	0.090	-0.744	0.110	-0.609
0.230	-0.279	0.090	-0.873	0.110	-0.785	0.140	-0.400
0.400	-0.141	0.130	-0.870	0.130	-0.864	0.190	-5.160
0.490	-0.125	0.150	-0.761	0.150	-0.871	0.250	-0.301
0.590	-0.100	0.200	-0.650	0.210	-0.953	0.400	-0.284
0.630	-0.073	0.250	-0.262	0.250	-0.382	0.490	-0.413
0.700	-0.055	0.260	-0.229	0.340	-0.329	0.580	-0.315
0.750	-0.041	0.280	-0.192	0.370	-0.315	0.650	-0.322
0.810	-0.052	0.290	-0.198	0.400	-0.303	0.700	-0.277
0.840	-0.054	0.310	-0.186	0.410	-0.226	0.750	-0.348
0.900	-0.004	0.320	-0.176	0.430	-0.225	0.800	-0.237
0.960	-0.012	0.340	-0.220	0.440	-0.194	0.830	-0.201
		0.350	-0.080	0.460	0.043	0.900	-0.030
		0.370	-0.218	0.490	-0.150	0.960	-0.005
		0.380	-0.207	0.500	-0.201		
		0.400	-0.197	0.520	-0.172		
		0.410	-0.220	0.540	-0.158		
		0.430	-0.243	0.550	-0.161		
		0.440	-0.210	0.580	-0.113		
		0.460	-0.252	0.600	-0.161		
		0.470	-0.234	0.610	-0.062		
		0.490	-0.238	0.650	-2.567		
		0.500	-0.217	0.700	-0.147		
		0.520	-0.190	0.750	-0.129		
		0.530	-0.192	0.820	-0.179		
		0.550	-0.190	0.890	-0.066		
		0.560	-0.135	0.900	-0.079		
		0.580	-0.144	0.960	-0.033		
		0.590	-0.135				
		0.600	-0.141				
		0.640	-2.414				
		0.700	-0.046				
		0.750	-0.033				
		0.820	-2.572				
		0.870	0.007				
		0.930	0.041				
		0.960	0.038				
			Lower Surface				
0.020	0.224	0.020	0.236	0.020	0.254	0.020	0.286
0.110	0.011	0.060	0.178	0.060	0.223	0.060	6.318
0.230	-0.030	0.090	0.143	0.090	0.147	0.110	0.057
0.400	-0.020	0.120	0.114	0.120	-0.021	0.250	-0.006
0.490	-0.052	0.200	0.144	0.200	0.033	0.400	-0.006
0.630	1.859	0.260	0.055	0.250	0.029	0.490	-0.042
0.750	-0.009	0.400	-2.595	0.400	0.003	0.580	-0.070
0.850	0.018	0.490	0.020	0.490	0.003	0.650	-0.055
0.900	0.035	0.580	0.065	0.580	0.007	0.750	0.046
0.960	0.050	0.640	0.290	0.650	0.066	0.830	0.156
		0.750	0.060	0.750	0.170	0.900	0.219
		0.870	0.088	0.890	******	0.960	-0.020
		0.930	0.081	0.930	0.157		
		0.960	0.037	0.960	-2.469		

Table H-2. Continued.

Flight 194, Wing sweep = 58°, Time = 12-5-15-000, MINF = 0.929, Camber = 0/2, ALPT = 8.04, BETA = 0.36, QINF = 334.1, RNPU = 2.5E+06

η = 0.93		0.76		0.59		0.40	
			Upper Surface				
x/c	CP	*x/c*	CP	*x/c*	CP	*x/c*	CP
0.020	-1.041	0.000	-0.237	0.000	-3.915	0.010	-1.313
0.060	-1.033	0.020	-0.764	0.020	-0.898	0.020	-1.286
0.110	-0.264	0.040	-0.680	0.060	-0.852	0.060	-0.988
0.200	-0.322	0.060	-0.706	0.090	-0.896	0.110	-0.613
0.230	-0.246	0.090	-0.688	0.110	-0.894	0.140	-0.428
0.400	-0.136	0.130	-0.702	0.130	-0.871	0.190	-4.857
0.490	-0.111	0.150	-0.642	0.150	-0.763	0.250	-0.362
0.590	-0.111	0.200	-0.590	0.210	-0.738	0.400	-0.341
0.630	-0.099	0.250	-0.532	0.250	-0.185	0.490	-0.436
0.700	-0.091	0.260	-0.513	0.340	-0.243	0.580	-0.261
0.750	-0.028	0.280	-0.519	0.370	-0.292	0.650	-0.239
0.810	-0.049	0.290	-0.487	0.400	-0.276	0.700	-0.197
0.840	-0.047	0.310	-0.474	0.410	-0.270	0.750	-0.253
0.900	-0.004	0.320	-0.439	0.430	-0.284	0.800	-0.201
0.960	0.018	0.340	-0.468	0.440	-0.298	0.830	-0.331
		0.350	-0.185	0.460	-0.087	0.900	-0.049
		0.370	-0.400	0.490	-0.278	0.960	-0.030
		0.380	-0.353	0.500	-0.308		
		0.400	-0.270	0.520	-0.302		
		0.410	-0.299	0.540	-0.297		
		0.430	-0.224	0.550	-0.280		
		0.440	-0.211	0.580	-0.264		
		0.460	-0.216	0.600	-0.255		
		0.470	-0.167	0.610	-0.176		
		0.490	-0.135	0.650	-2.412		
		0.500	-0.119	0.700	-0.164		
		0.520	-0.106	0.750	-0.138		
		0.530	-0.058	0.820	-0.127		
		0.550	-0.042	0.890	-0.053		
		0.560	-0.015	0.900	-0.062		
		0.580	-0.010	0.960	-0.011		
		0.590	-0.025				
		0.600	-0.040				
		0.640	-2.267				
		0.700	-0.029				
		0.750	-0.027				
		0.820	-2.416				
		0.870	0.010				
		0.930	0.033				
		0.960	0.046				
			Lower Surface				
0.020	0.115	0.020	0.210	0.020	0.210	0.020	0.258
0.110	-0.012	0.060	0.159	0.060	0.170	0.060	5.970
0.230	-0.034	0.090	0.114	0.090	0.104	0.110	0.028
0.400	-0.042	0.120	0.105	0.120	-0.059	0.250	-0.020
0.490	-0.052	0.200	0.106	0.200	0.000	0.400	-0.038
0.630	1.764	0.260	0.043	0.250	-0.002	0.490	-0.056
0.750	-0.004	0.400	-2.438	0.400	-0.004	0.580	-0.122
0.850	0.018	0.490	0.017	0.490	-0.007	0.650	-0.088
0.900	0.051	0.580	0.042	0.580	-0.016	0.750	0.005
0.960	0.062	0.640	0.262	0.650	0.086	0.830	0.130
		0.750	0.067	0.750	0.184	0.900	0.218
		0.870	0.075	0.890	******	0.960	-0.046
		0.930	0.089	0.930	0.159		
		0.960	0.039	0.960	-2.319		

Table H-2. Continued.

Flight 194, Wing sweep = 58°, Time = 12-5-21-500, MINF = 0.950, Camber = 0/2, ALPT = 7.72, BETA = 0.36, QINF = 347.1, RNPU = 2.6E+06

η = 0.93		0.76		0.59		0.40	
Upper Surface							
x/c	CP	*x/c*	CP	*x/c*	CP	*x/c*	CP
0.020	-1.099	0.000	-0.206	0.000	-3.758	0.010	-1.220
0.060	-0.972	0.020	-0.705	0.020	-1.079	0.020	-1.222
0.110	-0.720	0.040	-0.598	0.060	-0.839	0.060	-1.099
0.200	-0.323	0.060	-0.628	0.090	-0.892	0.110	-0.639
0.230	-0.238	0.090	-0.695	0.110	-0.870	0.140	-0.431
0.400	-0.074	0.130	-0.740	0.130	-0.804	0.190	-4.664
0.490	-0.086	0.150	-0.719	0.150	-0.679	0.250	-0.338
0.590	-0.072	0.200	-0.693	0.210	-0.618	0.400	-0.312
0.630	-0.074	0.250	-0.604	0.250	-0.257	0.490	-0.405
0.700	-0.064	0.260	-0.549	0.340	-0.303	0.580	-0.285
0.750	-0.005	0.280	-0.563	0.370	-0.324	0.650	-0.295
0.810	-0.016	0.290	-0.538	0.400	-0.318	0.700	-0.274
0.840	-0.021	0.310	-0.485	0.410	-0.289	0.750	-0.321
0.900	0.018	0.320	-0.480	0.430	-0.328	0.800	-0.264
0.960	0.034	0.340	-0.471	0.440	-0.325	0.830	-0.401
		0.350	-0.189	0.460	-0.113	0.900	-0.049
		0.370	-0.406	0.490	-0.307	0.960	-0.035
		0.380	-0.361	0.500	-0.332		
		0.400	-0.300	0.520	-0.345		
		0.410	-0.315	0.540	-0.330		
		0.430	-0.258	0.550	-0.324		
		0.440	-0.229	0.580	-0.316		
		0.460	-0.241	0.600	-0.321		
		0.470	-0.174	0.610	-0.256		
		0.490	-0.115	0.650	-2.310		
		0.500	-0.070	0.700	-0.234		
		0.520	-0.051	0.750	-0.221		
		0.530	-0.027	0.820	-0.147		
		0.550	-0.027	0.890	-0.049		
		0.560	-0.016	0.900	-0.048		
		0.580	0.000	0.960	0.004		
		0.590	-0.011				
		0.600	-0.040				
		0.640	-2.171				
		0.700	-0.017				
		0.750	-0.013				
		0.820	-2.315				
		0.870	0.023				
		0.930	0.055				
		0.960	0.061				
Lower Surface							
0.020	0.152	0.020	0.185	0.020	0.187	0.020	0.241
0.110	-0.014	0.060	0.132	0.060	0.139	0.060	5.757
0.230	-0.018	0.090	0.108	0.090	0.060	0.110	0.029
0.400	-0.112	0.120	0.105	0.120	-0.081	0.250	-0.054
0.490	-0.049	0.200	0.100	0.200	-0.034	0.400	-0.054
0.630	1.708	0.260	0.039	0.250	-0.029	0.490	-0.094
0.750	0.010	0.400	-2.336	0.400	-0.015	0.580	-0.146
0.850	0.029	0.490	0.014	0.490	-0.009	0.650	-0.126
0.900	0.061	0.580	0.045	0.580	-0.023	0.750	-0.022
0.960	0.076	0.640	0.255	0.650	0.068	0.830	0.112
		0.750	0.059	0.750	0.175	0.900	0.203
		0.870	0.086	0.890	******	0.960	-0.046
		0.930	0.094	0.930	0.158		
		0.960	0.048	0.960	-2.221		

Table H-2. Continued.

Flight 194, Wing sweep = 58°, Time = 12-5-37-500, MINF = 1.000, Camber = 0/2, ALPT = 6.71, BETA = 0.28, QINF = 377.8, RNPU = 2.7E+06

η = 0.93		0.76		0.59		0.40	
			Upper Surface				
x/c	CP	*x/c*	CP	*x/c*	CP	*x/c*	CP
0.020	-0.974	0.000	-0.058	0.000	-3.428	0.010	-1.003
0.060	-0.628	0.020	-1.045	0.020	-1.012	0.020	-0.989
0.110	-0.434	0.040	-0.717	0.060	-0.773	0.060	-0.859
0.200	-0.392	0.060	-0.659	0.090	-0.670	0.110	-0.495
0.230	-0.371	0.090	-0.616	0.110	-0.625	0.140	-0.383
0.400	-0.299	0.130	-0.579	0.130	-0.504	0.190	-4.261
0.490	-0.302	0.150	-0.505	0.150	-0.274	0.250	-0.256
0.590	-0.308	0.200	-0.431	0.210	-0.297	0.400	-0.220
0.630	-0.249	0.250	-0.299	0.250	-0.263	0.490	-0.301
0.700	-0.196	0.260	-0.273	0.340	-0.263	0.580	-0.220
0.750	-0.136	0.280	-0.288	0.370	-0.275	0.650	-0.254
0.810	-0.162	0.290	-0.298	0.400	-0.267	0.700	-0.226
0.840	-0.163	0.310	-0.274	0.410	-0.243	0.750	-0.282
0.900	-0.070	0.320	-0.279	0.430	-0.273	0.800	-0.228
0.960	-0.017	0.340	-0.294	0.440	-0.274	0.830	-0.342
		0.350	-0.149	0.460	-0.081	0.900	-0.075
		0.370	-0.292	0.490	-0.222	0.960	-0.065
		0.380	-0.283	0.500	-0.278		
		0.400	-0.240	0.520	-0.275		
		0.410	-0.297	0.540	-0.271		
		0.430	-0.280	0.550	-0.268		
		0.440	-0.282	0.580	-0.268		
		0.460	-0.312	0.600	-0.290		
		0.470	-0.312	0.610	-0.235		
		0.490	-0.297	0.650	-2.098		
		0.500	-0.303	0.700	-0.340		
		0.520	-0.299	0.750	-0.365		
		0.530	-0.307	0.820	-0.424		
		0.550	-0.322	0.890	-0.242		
		0.560	-0.330	0.900	-0.182		
		0.580	-0.311	0.960	-0.141		
		0.590	-0.341				
		0.600	-0.364				
		0.640	-1.970				
		0.700	-0.407				
		0.750	-0.211				
		0.820	-2.102				
		0.870	-0.101				
		0.930	-0.061				
		0.960	-0.035				
			Lower Surface				
0.020	0.059	0.020	0.042	0.020	0.138	0.020	0.188
0.110	-0.089	0.060	0.014	0.060	0.094	0.060	5.314
0.230	-0.029	0.090	-0.040	0.090	0.014	0.110	-0.018
0.400	-0.175	0.120	-0.025	0.120	-0.152	0.250	-0.054
0.490	-0.194	0.200	-0.039	0.200	-0.054	0.400	-0.083
0.630	1.594	0.260	-0.159	0.250	-0.113	0.490	-0.126
0.750	-0.147	0.400	-2.122	0.400	-0.111	0.580	-0.192
0.850	-0.106	0.490	-0.077	0.490	-0.071	0.650	-0.167
0.900	-0.059	0.580	-0.024	0.580	-0.266	0.750	-0.107
0.960	-0.019	0.640	0.196	0.650	-0.069	0.830	-0.045
		0.750	0.040	0.750	0.042	0.900	0.057
		0.870	0.060	0.890	******	0.960	-0.073
		0.930	0.032	0.930	0.052		
		0.960	-0.018	0.960	-2.016		

Table H-2. Continued.

Flight 194, Wing sweep = 58°, Time = 12-5-54-000, MINF = 1.050, Camber = 0/2, ALPT = 7.07, BETA = 0.28, QINF = 414.2, RNPU = 2.9E+06

η = 0.93		0.76		0.59		0.40	
			Upper Surface				
x/c	CP	*x/c*	CP	*x/c*	CP	*x/c*	CP
0.020	-0.929	0.000	-0.007	0.000	-3.120	0.010	-0.917
0.060	-0.591	0.020	-0.938	0.020	-0.924	0.020	-0.934
0.110	-0.506	0.040	-0.672	0.060	-0.756	0.060	-0.801
0.200	-0.460	0.060	-0.640	0.090	-0.628	0.110	-0.466
0.230	-0.418	0.090	-0.597	0.110	-0.620	0.140	-0.321
0.400	-0.223	0.130	-0.579	0.130	-0.562	0.190	-3.879
0.490	-0.242	0.150	-0.530	0.150	-0.396	0.250	-0.205
0.590	-0.255	0.200	-0.472	0.210	-0.273	0.400	-0.208
0.630	-0.248	0.250	-0.319	0.250	-0.217	0.490	-0.307
0.700	-0.212	0.260	-0.270	0.340	-0.222	0.580	-0.180
0.750	-0.115	0.280	-0.276	0.370	-0.239	0.650	-0.213
0.810	-0.141	0.290	-0.270	0.400	-0.237	0.700	-0.193
0.840	-0.145	0.310	-0.240	0.410	-0.210	0.750	-0.234
0.900	-0.091	0.320	-0.242	0.430	-0.232	0.800	-0.179
0.960	-0.047	0.340	-0.250	0.440	-0.229	0.830	-0.287
		0.350	-0.111	0.460	-0.054	0.900	-0.043
		0.370	-0.251	0.490	-0.217	0.960	-0.031
		0.380	-0.240	0.500	-0.239		
		0.400	-0.195	0.520	-0.235		
		0.410	-0.254	0.540	-0.228		
		0.430	-0.227	0.550	-0.229		
		0.440	-0.231	0.580	-0.229		
		0.460	-0.254	0.600	-0.245		
		0.470	-0.261	0.610	-0.206		
		0.490	-0.248	0.650	-1.907		
		0.500	-0.260	0.700	-0.289		
		0.520	-0.239	0.750	-0.323		
		0.530	-0.254	0.820	-0.388		
		0.550	-0.252	0.890	-0.265		
		0.560	-0.277	0.900	-0.209		
		0.580	-0.255	0.960	-0.154		
		0.590	-0.282				
		0.600	-0.314				
		0.640	-1.790				
		0.700	-0.343				
		0.750	-0.195				
		0.820	-1.910				
		0.870	-0.079				
		0.930	-0.035				
		0.960	-0.017				
			Lower Surface				
0.020	0.068	0.020	0.133	0.020	0.183	0.020	0.253
0.110	-0.048	0.060	0.084	0.060	0.144	0.060	4.855
0.230	0.010	0.090	0.024	0.090	0.063	0.110	0.027
0.400	-0.112	0.120	0.038	0.120	-0.076	0.250	-0.015
0.490	-0.133	0.200	0.027	0.200	0.004	0.400	-0.037
0.630	1.462	0.260	-0.085	0.250	-0.043	0.490	-0.070
0.750	-0.133	0.400	-1.928	0.400	-0.051	0.580	-0.139
0.850	-0.082	0.490	-0.058	0.490	-0.020	0.650	-0.124
0.900	-0.042	0.580	-0.004	0.580	-0.238	0.750	-0.055
0.960	-0.027	0.640	0.201	0.650	-0.008	0.830	0.004
		0.750	0.059	0.750	0.080	0.900	0.081
		0.870	0.070	0.890	******	0.960	-0.024
		0.930	0.066	0.930	0.075		
		0.960	0.012	0.960	-1.832		

Table H-2. Continued.

Flight 194, Wing sweep = 58°, Time = 12-6-9-500, MINF = 1.100, Camber = 0/2, ALPT = 6.54, BETA = 0.34, QINF = 456.2, RNPU = 3.1E+06

η = 0.93		0.76		0.59		0.40	
			Upper Surface				
x/c	CP	*x/c*	CP	*x/c*	CP	*x/c*	CP
0.020	-0.770	0.000	0.083	0.000	-2.836	0.010	-0.806
0.060	-0.525	0.020	-0.845	0.020	-0.786	0.020	-0.801
0.110	-0.469	0.040	-0.741	0.060	-0.735	0.060	-0.749
0.200	-0.301	0.060	-0.524	0.090	-0.530	0.110	-0.443
0.230	-0.263	0.090	-0.479	0.110	-0.510	0.140	-0.307
0.400	-0.181	0.130	-0.482	0.130	-0.473	0.190	-3.526
0.490	-0.201	0.150	-0.433	0.150	-0.331	0.250	-0.162
0.590	-0.211	0.200	-0.379	0.210	-0.227	0.400	-0.151
0.630	-0.222	0.250	-0.207	0.250	-0.157	0.490	-0.217
0.700	-0.257	0.260	-0.185	0.340	-0.165	0.580	-0.123
0.750	-0.149	0.280	-0.201	0.370	-0.180	0.650	-0.172
0.810	-0.172	0.290	-0.209	0.400	-0.180	0.700	-0.148
0.840	-0.160	0.310	-0.193	0.410	-0.162	0.750	-0.197
0.900	-0.098	0.320	-0.193	0.430	-0.184	0.800	-0.145
0.960	-0.074	0.340	-0.207	0.440	-0.181	0.830	-0.239
		0.350	-0.085	0.460	-0.024	0.900	-0.030
		0.370	-0.207	0.490	-0.166	0.960	-0.022
		0.380	-0.194	0.500	-0.185		
		0.400	-0.152	0.520	-0.185		
		0.410	-0.199	0.540	-0.183		
		0.430	-0.185	0.550	-0.177		
		0.440	-0.156	0.580	-0.179		
		0.460	-0.203	0.600	-0.192		
		0.470	-0.209	0.610	-0.154		
		0.490	-0.196	0.650	-1.735		
		0.500	-0.201	0.700	-0.226		
		0.520	-0.201	0.750	-0.261		
		0.530	-0.206	0.820	-0.330		
		0.550	-0.217	0.890	-0.243		
		0.560	-0.221	0.900	-0.180		
		0.580	-0.204	0.960	-0.107		
		0.590	-0.228				
		0.600	-0.263				
		0.640	-1.629				
		0.700	-0.286				
		0.750	-0.224				
		0.820	-1.738				
		0.870	-0.075				
		0.930	-0.026				
		0.960	-0.002				
			Lower Surface				
0.020	0.081	0.020	0.088	0.020	0.157	0.020	0.288
0.110	-0.046	0.060	0.073	0.060	0.128	0.060	4.405
0.230	-0.057	0.090	0.003	0.090	0.053	0.110	0.017
0.400	-0.105	0.120	0.016	0.120	-0.108	0.250	-0.048
0.490	-0.103	0.200	0.045	0.200	-0.035	0.400	-0.051
0.630	1.256	0.260	-0.019	0.250	-0.023	0.490	-0.087
0.750	-0.095	0.400	-1.754	0.400	-0.080	0.580	-0.134
0.850	-0.058	0.490	-0.167	0.490	-0.022	0.650	-0.133
0.900	-0.024	0.580	-0.022	0.580	-0.177	0.750	-0.044
0.960	-0.019	0.640	0.186	0.650	-0.015	0.830	-0.011
		0.750	0.065	0.750	0.079	0.900	0.087
		0.870	0.076	0.890	******	0.960	-0.029
		0.930	0.076	0.930	0.090		
		0.960	0.031	0.960	-1.667		

Table H-2. Continued.

Flight 194, Wing sweep = 58°, Time = 12-6-22-000, MINF = 1.150, Camber = 0/2, ALPT = 5.91, BETA = 0.31, QINF = 501.4, RNPU = 3.3E+06

η = 0.93		0.76		0.59		0.40	
			Upper Surface				
x/c	CP	*x/c*	CP	*x/c*	CP	*x/c*	CP
0.020	-0.651	0.000	0.139	0.000	-2.587	0.010	-0.675
0.060	-0.638	0.020	-0.733	0.020	-0.666	0.020	-0.685
0.110	-0.386	0.040	-0.643	0.060	-0.687	0.060	-0.625
0.200	-0.195	0.060	-0.622	0.090	-0.639	0.110	-0.436
0.230	-0.134	0.090	-0.609	0.110	-0.643	0.140	-0.336
0.400	-0.126	0.130	-0.402	0.130	-0.415	0.190	-3.215
0.490	-0.155	0.150	-0.365	0.150	-0.298	0.250	-0.179
0.590	-0.180	0.200	-0.292	0.210	-0.224	0.400	-0.110
0.630	-0.195	0.250	-0.148	0.250	-0.128	0.490	-0.159
0.700	-0.218	0.260	-0.142	0.340	-0.129	0.580	-0.097
0.750	-0.238	0.280	-0.157	0.370	-0.147	0.650	-0.143
0.810	-0.258	0.290	-0.164	0.400	-0.144	0.700	-0.126
0.840	-0.265	0.310	-0.140	0.410	-0.133	0.750	-0.164
0.900	-0.115	0.320	-0.154	0.430	-0.147	0.800	-0.121
0.960	-0.082	0.340	-0.166	0.440	-0.146	0.830	-0.208
		0.350	-0.071	0.460	-0.005	0.900	-0.034
		0.370	-0.167	0.490	-0.131	0.960	-0.027
		0.380	-0.153	0.500	-0.152		
		0.400	-0.113	0.520	-0.144		
		0.410	-0.161	0.540	-0.148		
		0.430	-0.146	0.550	-0.142		
		0.440	-0.137	0.580	-0.159		
		0.460	-0.169	0.600	-0.156		
		0.470	-0.154	0.610	-0.113		
		0.490	-0.157	0.650	-1.585		
		0.500	-0.161	0.700	-0.195		
		0.520	-0.157	0.750	-0.225		
		0.530	-0.156	0.820	-0.277		
		0.550	-0.177	0.890	-0.253		
		0.560	-0.185	0.900	-0.174		
		0.580	-0.160	0.960	-0.100		
		0.590	-0.191				
		0.600	-0.214				
		0.640	-1.488				
		0.700	-0.243				
		0.750	-0.206				
		0.820	-1.588				
		0.870	-0.077				
		0.930	-0.024				
		0.960	-0.004				
			Lower Surface				
0.020	0.061	0.020	0.069	0.020	0.098	0.020	0.275
0.110	-0.057	0.060	0.042	0.060	0.102	0.060	4.001
0.230	-0.034	0.090	-0.015	0.090	0.034	0.110	0.045
0.400	-0.200	0.120	-0.019	0.120	-0.126	0.250	-0.042
0.490	-0.093	0.200	0.034	0.200	-0.047	0.400	-0.058
0.630	1.136	0.260	-0.056	0.250	-0.043	0.490	-0.104
0.750	-0.082	0.400	-1.603	0.400	-0.083	0.580	-0.153
0.850	-0.053	0.490	-0.148	0.490	-0.031	0.650	-0.139
0.900	-0.022	0.580	-0.096	0.580	-0.163	0.750	-0.059
0.960	-0.009	0.640	0.151	0.650	-0.094	0.830	-0.032
		0.750	0.058	0.750	0.074	0.900	0.062
		0.870	0.068	0.890	******	0.960	-0.033
		0.930	0.066	0.930	0.070		
		0.960	0.028	0.960	-1.523		

Table H-2. Continued.

Flight 194, Wing sweep = 58°, Time = 12-6-34-000, MINF = 1.200, Camber = 0/2, ALPT = 5.70, BETA = 0.31, QINF = 551.5, RNPU = 3.6E+06

η = 0.93		0.76		0.59		0.40	
			Upper Surface				
x/c	CP	*x/c*	CP	*x/c*	CP	*x/c*	CP
0.020	-0.564	0.000	0.190	0.000	-2.362	0.010	-0.592
0.060	-0.558	0.020	-0.641	0.020	-0.570	0.020	-0.605
0.110	-0.511	0.040	-0.545	0.060	-0.587	0.060	-0.562
0.200	-0.235	0.060	-0.551	0.090	-0.569	0.110	-0.441
0.230	-0.164	0.090	-0.546	0.110	-0.558	0.140	-0.324
0.400	-0.071	0.130	-0.548	0.130	-0.522	0.190	-2.932
0.490	-0.092	0.150	-0.514	0.150	-0.369	0.250	-0.217
0.590	-0.127	0.200	-0.316	0.210	-0.300	0.400	-0.098
0.630	-0.152	0.250	-0.157	0.250	-0.150	0.490	-0.123
0.700	-0.176	0.260	-0.123	0.340	-0.111	0.580	-0.090
0.750	-0.223	0.280	-0.127	0.370	-0.123	0.650	-0.134
0.810	-0.249	0.290	-0.128	0.400	-0.113	0.700	-0.100
0.840	-0.249	0.310	-0.108	0.410	-0.106	0.750	-0.142
0.900	-0.102	0.320	-0.113	0.430	-0.119	0.800	-0.104
0.960	-0.065	0.340	-0.130	0.440	-0.115	0.830	-0.183
		0.350	-0.044	0.460	0.017	0.900	-0.022
		0.370	-0.126	0.490	-0.097	0.960	-0.018
		0.380	-0.121	0.500	-0.122		
		0.400	-0.079	0.520	-0.115		
		0.410	-0.123	0.540	-0.121		
		0.430	-0.104	0.550	-0.113		
		0.440	-0.102	0.580	-0.118		
		0.460	-0.128	0.600	-0.119		
		0.470	-0.127	0.610	-0.097		
		0.490	-0.120	0.650	-1.451		
		0.500	-0.120	0.700	-0.156		
		0.520	-0.120	0.750	-0.188		
		0.530	-0.126	0.820	-0.243		
		0.550	-0.140	0.890	-0.263		
		0.560	-0.145	0.900	-0.180		
		0.580	-0.129	0.960	-0.102		
		0.590	-0.154				
		0.600	-0.172				
		0.640	-1.363				
		0.700	-0.213				
		0.750	-0.175				
		0.820	-1.454				
		0.870	-0.087				
		0.930	-0.015				
		0.960	0.006				
			Lower Surface				
0.020	0.073	0.020	0.088	0.020	0.113	0.020	0.242
0.110	-0.040	0.060	0.050	0.060	0.124	0.060	3.628
0.230	-0.030	0.090	0.001	0.090	0.061	0.110	0.058
0.400	-0.161	0.120	-0.019	0.120	-0.099	0.250	0.000
0.490	-0.194	0.200	0.010	0.200	-0.036	0.400	-0.042
0.630	1.024	0.260	-0.035	0.250	-0.055	0.490	-0.092
0.750	-0.053	0.400	-1.467	0.400	-0.077	0.580	-0.146
0.850	-0.034	0.490	-0.104	0.490	-0.022	0.650	-0.114
0.900	-0.008	0.580	-0.159	0.580	-0.174	0.750	-0.044
0.960	0.000	0.640	0.132	0.650	-0.149	0.830	-0.032
		0.750	0.068	0.750	0.086	0.900	0.054
		0.870	0.075	0.890	******	0.960	-0.027
		0.930	0.069	0.930	0.070		
		0.960	0.028	0.960	-1.395		

Table H-2. Continued.

Flight 194, Wing sweep = 58°, Time = 12-6-46-000, MINF = 1.249, Camber = 0/2, ALPT = 5.15, BETA = 0.23, QINF = 602.4, RNPU = 3.9E+06

η = 0.93		0.76		0.59		0.40	
			Upper Surface				
x/c	CP	*x/c*	CP	*x/c*	CP	*x/c*	CP
0.020	-0.477	0.000	0.232	0.000	-2.169	0.010	-0.518
0.060	-0.477	0.020	-0.575	0.020	-0.476	0.020	-0.519
0.110	-0.417	0.040	-0.462	0.060	-0.500	0.060	-0.500
0.200	-0.277	0.060	-0.481	0.090	-0.486	0.110	-0.421
0.230	-0.164	0.090	-0.460	0.110	-0.466	0.140	-0.291
0.400	-0.061	0.130	-0.469	0.130	-0.437	0.190	-2.692
0.490	-0.070	0.150	-0.440	0.150	-0.334	0.250	-0.233
0.590	-0.085	0.200	-0.388	0.210	-0.324	0.400	-0.107
0.630	-0.107	0.250	-0.163	0.250	-0.192	0.490	-0.110
0.700	-0.133	0.260	-0.140	0.340	-0.109	0.580	-0.079
0.750	-0.184	0.280	-0.141	0.370	-0.104	0.650	-0.118
0.810	-0.209	0.290	-0.143	0.400	-0.107	0.700	-0.093
0.840	-0.214	0.310	-0.111	0.410	-0.082	0.750	-0.123
0.900	-0.138	0.320	-0.112	0.430	-0.101	0.800	-0.095
0.960	-0.059	0.340	-0.112	0.440	-0.096	0.830	-0.170
		0.350	-0.053	0.460	0.020	0.900	-0.029
		0.370	-0.101	0.490	-0.070	0.960	-0.024
		0.380	-0.088	0.500	-0.090		
		0.400	-0.063	0.520	-0.095		
		0.410	-0.100	0.540	-0.090		
		0.430	-0.082	0.550	-0.092		
		0.440	-0.078	0.580	-0.086		
		0.460	-0.101	0.600	-0.098		
		0.470	-0.110	0.610	-0.067		
		0.490	-0.095	0.650	-1.335		
		0.500	-0.095	0.700	-0.155		
		0.520	-0.094	0.750	-0.167		
		0.530	-0.095	0.820	-0.215		
		0.550	-0.109	0.890	-0.254		
		0.560	-0.106	0.900	-0.195		
		0.580	-0.109	0.960	-0.093		
		0.590	-0.127				
		0.600	-0.143				
		0.640	-1.255				
		0.700	-0.176				
		0.750	-0.160				
		0.820	-1.338				
		0.870	-0.133				
		0.930	-0.016				
		0.960	0.008				
			Lower Surface				
0.020	0.040	0.020	0.075	0.020	0.119	0.020	0.229
0.110	-0.062	0.060	0.039	0.060	0.123	0.060	3.314
0.230	-0.037	0.090	-0.015	0.090	0.058	0.110	-0.027
0.400	-0.144	0.120	-0.021	0.120	-0.086	0.250	0.011
0.490	-0.156	0.200	0.004	0.200	-0.037	0.400	-0.031
0.630	0.930	0.260	-0.050	0.250	-0.057	0.490	-0.095
0.750	-0.037	0.400	-1.350	0.400	-0.090	0.580	-0.134
0.850	-0.030	0.490	-0.130	0.490	-0.031	0.650	-0.102
0.900	-0.005	0.580	-0.138	0.580	-0.170	0.750	-0.036
0.960	0.013	0.640	0.087	0.650	-0.140	0.830	-0.045
		0.750	0.047	0.750	0.071	0.900	0.047
		0.870	0.060	0.890	******	0.960	-0.032
		0.930	0.072	0.930	0.072		
		0.960	0.031	0.960	-1.284		

Table H-2. Continued.

Flight 194, Wing sweep = 58°, Time = 12-7-1-500, MINF = 1.299, Camber = 0/2, ALPT = 4.53, BETA = 0.26, QINF = 657.7, RNPU = 4.2E+06

η = 0.93		0.76		0.59		0.40	
			Upper Surface				
x/c	CP	*x/c*	CP	*x/c*	CP	*x/c*	CP
0.020	-0.388	0.000	0.272	0.000	-1.995	0.010	-0.418
0.060	-0.376	0.020	-0.454	0.020	-0.376	0.020	-0.448
0.110	-0.344	0.040	-0.373	0.060	-0.451	0.060	-0.432
0.200	-0.341	0.060	-0.386	0.090	-0.385	0.110	-0.376
0.230	-0.282	0.090	-0.376	0.110	-0.387	0.140	-0.256
0.400	-0.060	0.130	-0.363	0.130	-0.336	0.190	-2.474
0.490	-0.049	0.150	-0.356	0.150	-0.291	0.250	-0.241
0.590	-0.056	0.200	-0.306	0.210	-0.282	0.400	-0.107
0.630	-0.071	0.250	-0.241	0.250	-0.241	0.490	-0.090
0.700	-0.107	0.260	-0.211	0.340	-0.109	0.580	-0.055
0.750	-0.148	0.280	-0.168	0.370	-0.101	0.650	-0.097
0.810	-0.165	0.290	-0.145	0.400	-0.103	0.700	-0.073
0.840	-0.168	0.310	-0.114	0.410	-0.076	0.750	-0.101
0.900	-0.239	0.320	-0.115	0.430	-0.091	0.800	-0.078
0.960	-0.060	0.340	-0.111	0.440	-0.085	0.830	-0.145
		0.350	-0.053	0.460	0.020	0.900	-0.031
		0.370	-0.101	0.490	-0.059	0.960	-0.024
		0.380	-0.087	0.500	-0.085		
		0.400	-0.055	0.520	-0.073		
		0.410	-0.083	0.540	-0.065		
		0.430	-0.066	0.550	-0.064		
		0.440	-0.066	0.580	-0.061		
		0.460	-0.084	0.600	-0.076		
		0.470	-0.085	0.610	-0.045		
		0.490	-0.066	0.650	-1.232		
		0.500	-0.065	0.700	-0.126		
		0.520	-0.067	0.750	-0.144		
		0.530	-0.068	0.820	-0.180		
		0.550	-0.069	0.890	-0.245		
		0.560	-0.091	0.900	-0.215		
		0.580	-0.074	0.960	-0.093		
		0.590	-0.093				
		0.600	-0.113				
		0.640	-1.158				
		0.700	-0.144				
		0.750	-0.132				
		0.820	-1.234				
		0.870	-0.118				
		0.930	-0.073				
		0.960	0.007				
			Lower Surface				
0.020	0.079	0.020	0.073	0.020	0.094	0.020	0.229
0.110	-0.068	0.060	0.046	0.060	0.134	0.060	3.027
0.230	-0.055	0.090	-0.021	0.090	0.080	0.110	-0.031
0.400	-0.122	0.120	-0.028	0.120	-0.075	0.250	0.019
0.490	-0.148	0.200	0.023	0.200	-0.023	0.400	-0.037
0.630	0.843	0.260	-0.061	0.250	-0.051	0.490	-0.087
0.750	-0.043	0.400	-1.245	0.400	-0.083	0.580	-0.125
0.850	-0.018	0.490	-0.128	0.490	-0.037	0.650	-0.101
0.900	0.009	0.580	-0.167	0.580	-0.181	0.750	-0.039
0.960	0.018	0.640	0.021	0.650	-0.176	0.830	-0.039
		0.750	0.048	0.750	0.043	0.900	0.066
		0.870	0.048	0.890	******	0.960	-0.038
		0.930	0.064	0.930	0.092		
		0.960	0.035	0.960	-1.185		

Table H-2. Continued.

Flight 217, Wing sweep = 58°, Time = 11-4-36-500, MINF = 1.213, Camber = 0/2, ALPT = 5.51, BETA = 0.22, QINF = 595.8, RNPU = 3.9E+06

η = 0.93		0.76		0.59		0.40	
			Upper Surface				
x/c	CP	*x/c*	CP	*x/c*	CP	*x/c*	CP
0.020	-0.690	0.000	-0.008	0.000	4.062**	0.010	-0.618
0.060	-0.734	0.020	-0.824	0.020	-0.760	0.020	-0.739
0.110	-0.701	0.040	-0.728	0.060	-0.927**	0.060	-0.674
0.200	-0.406	0.060	-0.739	0.090	-0.725	0.110	-0.619
0.230	-0.429	0.090	-0.658	0.110	-0.752	0.140	-0.494
0.400	-0.248	0.130	-0.713	0.130	-0.698	0.190	-0.971**
0.490	-0.249	0.150	-0.696	0.150	-0.643	0.250	-0.397
0.590	-0.297	0.200	-0.658	0.210	-0.404	0.400	-0.311
0.630	-0.310	0.250	-0.396	0.250	-0.342	0.490	-0.291
0.700	-0.318	0.260	-0.249	0.340	-0.415	0.580	-0.238
0.750	-0.361	0.280	-0.348	0.370	-0.256	0.650	-0.243
0.810	-0.413	0.290	-0.326	0.400	-0.285	0.700	-0.229
0.840	-0.418	0.310	-0.308	0.410	1.283**	0.750	-0.313
0.900	-0.290	0.320	-0.313	0.430	-0.194	0.800	-0.217
0.960	-0.244	0.340	-0.196	0.440	-0.301	0.830	-0.258
		0.350	-0.265**	0.460	-0.305	0.900	-0.238
		0.370	-0.296	0.490	-0.320	0.960	-0.217
		0.380	-0.313	0.500	-0.257		
		0.400	-0.265	0.520	-0.317		
		0.410	-0.307	0.540	-0.301		
		0.430	-0.293	0.550	-0.173		
		0.440	-0.276	0.580	-0.289		
		0.460	-0.243	0.600	-0.321		
		0.470	-0.300	0.610	-0.319		
		0.490	-0.299	0.650	1.951**		
		0.500	-0.309	0.700	-0.364		
		0.520	-0.313	0.750	-0.397		
		0.530	-0.315	0.820	-0.440		
		0.550	-0.344	0.890	-0.475		
		0.560	-0.341	0.900	-0.376		
		0.580	-0.271	0.960	-0.269		
		0.590	-0.344				
		0.600	-0.345				
		0.640	-0.372				
		0.700	-0.392				
		0.750	-0.210**				
		0.820	-0.330				
		0.870	-0.295				
		0.930	-0.199				
		0.960	-0.183				
			Lower Surface				
0.020	-0.163	0.020	-0.085	0.020	0.022	0.020	0.114
0.110	-0.211	0.060	-0.113	0.060	-0.040	0.060	-0.612
0.230	-0.219	0.090	-0.146	0.090	1.524**	0.110	-0.095
0.400	-0.325	0.120	-0.183	0.120	-0.233	0.250	-0.175
0.490	-0.352	0.200	-0.181	0.200	-0.221	0.400	-0.167
0.630	1.906**	0.260	-0.216	0.250	-0.106	0.490	-0.258
0.750	-0.231	0.400	-0.266	0.400	-0.148	0.580	-0.311
0.850	-0.209	0.490	-0.297	0.490	-0.210	0.650	-0.282
0.900	-0.175	0.580	-0.381	0.580	-0.339	0.750	-0.233
0.960	-0.175	0.640	-0.151	0.650	-0.164	0.830	-0.199
		0.750	-0.035	0.750	-0.117	0.900	-0.129
		0.870	-0.082	0.890	-0.076	0.960	-0.101
		0.930	-0.099	0.930	-0.106		
		0.960	-0.128	0.960	1.239**		

Table H-2. Continued.

Flight 217, Wing sweep = 58°, Time = 11-4-52-000, MINF = 1.216, Camber = 0/2, ALPT = 4.85, BETA = 0.17, QINF = 595.5, RNPU = 3.9E+06

η = 0.93		0.76		0.59		0.40	
			Upper Surface				
x/c	CP	*x/c*	CP	*x/c*	CP	*x/c*	CP
0.020	-0.928	0.000	-0.205	0.000	4.069**	0.010	-0.911
0.060	-0.935	0.020	-0.972	0.020	-0.944	0.020	-0.911
0.110	-0.884	0.040	-0.902	0.060	-0.922**	0.060	-0.856
0.200	-0.569	0.060	-0.932	0.090	-0.902	0.110	-0.764
0.230	-0.467	0.090	-0.897	0.110	-0.926	0.140	-0.691
0.400	-0.464	0.130	-0.883	0.130	-0.845	0.190	-0.967**
0.490	-0.484	0.150	-0.875	0.150	-0.715	0.250	-0.607
0.590	-0.521	0.200	-0.688	0.210	-0.678	0.400	-0.510
0.630	-0.538	0.250	-0.531	0.250	-0.533	0.490	-0.492
0.700	-0.542	0.260	-0.511	0.340	-0.387	0.580	-0.470
0.750	-0.634	0.280	-0.515	0.370	-0.518	0.650	-0.511
0.810	-0.633	0.290	-0.519	0.400	-0.501	0.700	-0.501
0.840	-0.638	0.310	-0.510	0.410	1.289**	0.750	-0.518
0.900	-0.517	0.320	-0.517	0.430	-0.514	0.800	-0.538
0.960	-0.464	0.340	-0.516	0.440	-0.504	0.830	-0.579
		0.350	-0.480**	0.460	-0.512	0.900	-0.464
		0.370	-0.507	0.490	-0.487	0.960	-0.437
		0.380	-0.521	0.500	-0.520		
		0.400	-0.423	0.520	-0.524		
		0.410	-0.516	0.540	-0.512		
		0.430	-0.502	0.550	-0.489		
		0.440	-0.487	0.580	-0.487		
		0.460	-0.509	0.600	-0.520		
		0.470	-0.524	0.610	-0.520		
		0.490	-0.511	0.650	1.957**		
		0.500	-0.519	0.700	-0.568		
		0.520	-0.518	0.750	-0.604		
		0.530	-0.523	0.820	-0.641		
		0.550	-0.549	0.890	-0.668		
		0.560	-0.547	0.900	-0.578		
		0.580	-0.545	0.960	-0.477		
		0.590	-0.550				
		0.600	-0.564				
		0.640	-0.579				
		0.700	-0.599				
		0.750	-0.439**				
		0.820	-0.547				
		0.870	-0.541				
		0.930	-0.425				
		0.960	-0.398				
			Lower Surface				
0.020	-0.387	0.020	-0.343	0.020	-0.279	0.020	-0.180
0.110	-0.452	0.060	-0.340	0.060	-0.274	0.060	-0.897
0.230	-0.458	0.090	-0.438	0.090	1.530**	0.110	-0.390
0.400	-0.549	0.120	-0.433	0.120	-0.470	0.250	-0.402
0.490	-0.573	0.200	-0.427	0.200	-0.465	0.400	-0.455
0.630	1.912**	0.260	-0.456	0.250	-0.441	0.490	-0.489
0.750	-0.449	0.400	-0.505	0.400	-0.492	0.580	-0.540
0.850	-0.429	0.490	-0.542	0.490	-0.323	0.650	-0.513
0.900	-0.395	0.580	-0.605	0.580	-0.566	0.750	-0.476
0.960	-0.397	0.640	-0.393	0.650	-0.445	0.830	-0.423
		0.750	-0.329	0.750	-0.350	0.900	-0.337
		0.870	-0.310	0.890	-0.307	0.960	-0.436
		0.930	-0.319	0.930	-0.335		
		0.960	-0.350	0.960	1.245**		

Table H-2. Continued.

Flight 217, Wing sweep = 58°, Time = 11-5-9-000, MINF = 1.221, Camber = 0/2, ALPT = 5.00, BETA = 0.25, QINF = 602.6, RNPU = 3.9E+06

η = 0.93		0.76		0.59		0.40	
			Upper Surface				
x/c	CP	*x/c*	CP	*x/c*	CP	*x/c*	CP
0.020	-0.592	0.000	0.132	0.000	4.018**	0.010	-0.634
0.060	-0.633	0.020	-0.589	0.020	-0.656	0.020	-0.623
0.110	-0.564	0.040	-0.567	0.060	-0.914**	0.060	-0.513
0.200	-0.270	0.060	-0.705	0.090	-0.564	0.110	-0.461
0.230	-0.231	0.090	-0.893	0.110	-0.643	0.140	-0.359
0.400	-0.126	0.130	-0.565	0.130	-0.525	0.190	-0.958**
0.490	-0.199	0.150	-0.542	0.150	-0.419	0.250	-0.274
0.590	-0.172	0.200	-0.466	0.210	-0.369	0.400	-0.175
0.630	-0.191	0.250	-0.223	0.250	-0.208	0.490	-0.219
0.700	-0.197	0.260	-0.189	0.340	-0.505	0.580	-0.134
0.750	-0.290	0.280	-0.193	0.370	-0.235	0.650	-0.177
0.810	-0.289	0.290	-0.185	0.400	-0.152	0.700	-0.157
0.840	-0.286	0.310	-0.230	0.410	1.271**	0.750	-0.179
0.900	-0.184	0.320	-0.183	0.430	-0.510	0.800	-0.537
0.960	-0.126	0.340	-0.234	0.440	-0.506	0.830	-0.215
		0.350	-0.142**	0.460	-0.511	0.900	-0.124
		0.370	-0.224	0.490	-0.205	0.960	-0.155
		0.380	-0.181	0.500	-0.181		
		0.400	-0.140	0.520	-0.521		
		0.410	-0.176	0.540	-0.173		
		0.430	-0.273	0.550	-0.373		
		0.440	-0.144	0.580	-0.148		
		0.460	-0.170	0.600	-0.181		
		0.470	-0.235	0.610	-0.187		
		0.490	-0.172	0.650	1.931**		
		0.500	-0.177	0.700	-0.234		
		0.520	-0.179	0.750	-0.322		
		0.530	-0.187	0.820	-0.361		
		0.550	-0.210	0.890	-0.334		
		0.560	-0.207	0.900	-0.303		
		0.580	-0.193	0.960	-0.135		
		0.590	-0.217				
		0.600	-0.220				
		0.640	-0.242				
		0.700	-0.261				
		0.750	-0.099**				
		0.820	-0.209				
		0.870	-0.213				
		0.930	-0.081				
		0.960	-0.060				
			Lower Surface				
0.020	-0.069	0.020	0.005	0.020	0.016	0.020	0.163
0.110	-0.110	0.060	0.006	0.060	0.072	0.060	-0.604
0.230	-0.113	0.090	-0.319	0.090	1.509**	0.110	-0.072
0.400	-0.217	0.120	-0.091	0.120	-0.127	0.250	-0.114
0.490	-0.226	0.200	-0.304	0.200	-0.116	0.400	-0.110
0.630	1.887**	0.260	-0.112	0.250	-0.208	0.490	-0.260
0.750	-0.098	0.400	-0.215	0.400	-0.489	0.580	-0.536
0.850	-0.089	0.490	-0.199	0.490	-0.322	0.650	-0.167
0.900	-0.059	0.580	-0.596	0.580	-0.223	0.750	-0.105
0.960	-0.115	0.640	-0.110	0.650	-0.442	0.830	-0.085
		0.750	-0.041	0.750	-0.008	0.900	-0.062
		0.870	0.026	0.890	0.039	0.960	-0.098
		0.930	0.021	0.930	-0.328		
		0.960	-0.015	0.960	1.228**		

Table H-2. Continued.

Flight 217, Wing sweep = 58°, Time = 11-5-13-500, MINF = 1.222, Camber = 0/2, ALPT = 3.56, BETA = 0.25, QINF = 603.3, RNPU = 3.9E+06

η = 0.93		0.76		0.59		0.40	
			Upper Surface				
x/c	CP	*x/c*	CP	*x/c*	CP	*x/c*	CP
0.020	-0.444	0.000	0.219	0.000	4.013**	0.010	-0.414
0.060	-0.433	0.020	-0.505	0.020	-0.460	0.020	-0.490
0.110	-0.141	0.040	-0.437	0.060	-0.913**	0.060	-0.404
0.200	-0.103	0.060	-0.462	0.090	-0.393	0.110	-0.305
0.230	-0.045	0.090	-0.403	0.110	-0.338	0.140	-0.260
0.400	-0.077	0.130	-0.240	0.130	-0.257	0.190	-0.957**
0.490	-0.106	0.150	-0.170	0.150	-0.225	0.250	-0.197
0.590	-0.137	0.200	-0.130	0.210	-0.221	0.400	-0.094
0.630	-0.154	0.250	-0.098	0.250	-0.094	0.490	-0.050
0.700	-0.163	0.260	-0.089	0.340	-0.077	0.580	-0.052
0.750	-0.238	0.280	-0.110	0.370	-0.106	0.650	-0.098
0.810	-0.230	0.290	-0.114	0.400	-0.077	0.700	-0.101
0.840	-0.244	0.310	-0.108	0.410	1.269**	0.750	-0.110
0.900	-0.136	0.320	-0.102	0.430	-0.096	0.800	-0.146
0.960	-0.063	0.340	-0.112	0.440	-0.089	0.830	-0.176
		0.350	-0.081**	0.460	-0.092	0.900	-0.052
		0.370	-0.101	0.490	-0.074	0.960	-0.043
		0.380	-0.102	0.500	-0.102		
		0.400	-0.089	0.520	-0.111		
		0.410	-0.099	0.540	-0.090		
		0.430	-0.084	0.550	-0.070		
		0.440	-0.069	0.580	-0.066		
		0.460	-0.090	0.600	-0.106		
		0.470	-0.087	0.610	-0.098		
		0.490	-0.091	0.650	1.929**		
		0.500	-0.099	0.700	-0.148		
		0.520	-0.103	0.750	-0.197		
		0.530	-0.106	0.820	-0.219		
		0.550	-0.131	0.890	-0.251		
		0.560	-0.137	0.900	-0.198		
		0.580	-0.113	0.960	-0.062		
		0.590	-0.145				
		0.600	-0.154				
		0.640	-0.162				
		0.700	-0.190				
		0.750	-0.045**				
		0.820	-0.140				
		0.870	-0.173				
		0.930	-0.033				
		0.960	-0.022				
			Lower Surface				
0.020	-0.038	0.020	0.008	0.020	0.090	0.020	0.173
0.110	-0.114	0.060	0.004	0.060	0.088	0.060	-0.519
0.230	-0.104	0.090	-0.093	0.090	1.507**	0.110	-0.012
0.400	-0.193	0.120	-0.075	0.120	-0.109	0.250	-0.037
0.490	-0.191	0.200	-0.062	0.200	-0.084	0.400	-0.086
0.630	1.885**	0.260	-0.103	0.250	-0.094	0.490	-0.131
0.750	-0.046	0.400	-0.133	0.400	-0.132	0.580	-0.167
0.850	-0.007	0.490	-0.175	0.490	-0.047	0.650	-0.140
0.900	0.026	0.580	-0.218	0.580	-0.206	0.750	-0.129
0.960	0.026	0.640	-0.039	0.650	-0.061	0.830	-0.033
		0.750	0.047	0.750	0.019	0.900	0.041
		0.870	0.073	0.890	0.068	0.960	-0.098
		0.930	0.070	0.930	0.024		
		0.960	0.046	0.960	1.226**		

Table H-2. Continued.

Flight 217, Wing sweep = 58°, Time = 11-5-15-000, MINF = 1.224, Camber = 0/2, ALPT = 2.68, BETA = 0.25, QINF = 605.9, RNPU = 3.9E+06

η = 0.93		0.76		0.59		0.40	
			Upper Surface				
x/c	CP	*x/c*	CP	*x/c*	CP	*x/c*	CP
0.020	-0.344	0.000	0.253	0.000	3.995**	0.010	-0.409
0.060	-0.071	0.020	-0.357	0.020	-0.419	0.020	-0.437
0.110	-0.058	0.040	-0.384	0.060	-0.910**	0.060	-0.313
0.200	-0.096	0.060	-0.330	0.090	-0.244	0.110	-0.261
0.230	-0.067	0.090	-0.161	0.110	-0.243	0.140	-0.244
0.400	-0.092	0.130	-0.185	0.130	-0.186	0.190	-0.953**
0.490	-0.113	0.150	-0.099	0.150	-0.195	0.250	-0.172
0.590	-0.144	0.200	-0.101	0.210	-0.201	0.400	-0.063
0.630	-0.160	0.250	-0.092	0.250	-0.065	0.490	-0.045
0.700	-0.163	0.260	-0.075	0.340	-0.069	0.580	-0.035
0.750	-0.235	0.280	-0.089	0.370	-0.084	0.650	-0.075
0.810	-0.229	0.290	-0.101	0.400	-0.081	0.700	-0.075
0.840	-0.233	0.310	-0.087	0.410	1.263**	0.750	-0.101
0.900	-0.138	0.320	-0.097	0.430	-0.082	0.800	-0.125
0.960	-0.063	0.340	-0.091	0.440	-0.063	0.830	-0.149
		0.350	-0.097**	0.460	-0.082	0.900	-0.050
		0.370	-0.077	0.490	-0.055	0.960	-0.047
		0.380	-0.090	0.500	-0.088		
		0.400	-0.049	0.520	-0.087		
		0.410	-0.086	0.540	-0.080		
		0.430	-0.071	0.550	-0.048		
		0.440	-0.070	0.580	-0.061		
		0.460	-0.079	0.600	-0.081		
		0.470	-0.087	0.610	-0.095		
		0.490	-0.079	0.650	1.920**		
		0.500	-0.092	0.700	-0.152		
		0.520	-0.092	0.750	-0.162		
		0.530	-0.097	0.820	-0.206		
		0.550	-0.121	0.890	-0.246		
		0.560	-0.121	0.900	-0.188		
		0.580	-0.107	0.960	-0.065		
		0.590	-0.136				
		0.600	-0.138				
		0.640	-0.153				
		0.700	-0.171				
		0.750	-0.047**				
		0.820	-0.134				
		0.870	-0.162				
		0.930	-0.028				
		0.960	0.008				
			Lower Surface				
0.020	-0.078	0.020	-0.032	0.020	0.070	0.020	0.140
0.110	-0.129	0.060	-0.011	0.060	0.068	0.060	-0.546
0.230	-0.134	0.090	-0.126	0.090	1.500**	0.110	-0.071
0.400	-0.207	0.120	-0.111	0.120	-0.126	0.250	-0.035
0.490	-0.206	0.200	-0.089	0.200	-0.091	0.400	-0.097
0.630	1.876**	0.260	-0.130	0.250	-0.115	0.490	-0.142
0.750	-0.023	0.400	-0.144	0.400	-0.160	0.580	-0.191
0.850	0.012	0.490	-0.198	0.490	-0.058	0.650	-0.148
0.900	0.043	0.580	-0.257	0.580	-0.228	0.750	-0.160
0.960	0.034	0.640	-0.075	0.650	-0.055	0.830	-0.046
		0.750	0.039	0.750	-0.005	0.900	0.026
		0.870	0.060	0.890	0.067	0.960	-0.042
		0.930	0.072	0.930	0.040		
		0.960	0.047	0.960	1.220**		

Table H-2. Continued.

Flight 217, Wing sweep = 58°, Time = 11-5-17-500, MINF = 1.227, Camber = 0/2, ALPT = 3.56, BETA = 0.34, QINF = 611.8, RNPU = 4.0E+06

η = 0.93		0.76		0.59		0.40	
			Upper Surface				
x/c	CP	*x/c*	CP	*x/c*	CP	*x/c*	CP
0.020	-0.444	0.000	0.226	0.000	3.952**	0.010	-0.407
0.060	-0.459	0.020	-0.476	0.020	-0.463	0.020	-0.458
0.110	-0.167	0.040	-0.433	0.060	-0.906**	0.060	-0.394
0.200	-0.097	0.060	-0.451	0.090	-0.394	0.110	-0.299
0.230	-0.069	0.090	-0.411	0.110	-0.357	0.140	-0.261
0.400	-0.078	0.130	-0.263	0.130	-0.265	0.190	-0.949**
0.490	-0.107	0.150	-0.191	0.150	-0.244	0.250	-0.196
0.590	-0.137	0.200	-0.143	0.210	-0.228	0.400	-0.095
0.630	-0.159	0.250	-0.108	0.250	-0.105	0.490	-0.068
0.700	-0.159	0.260	-0.090	0.340	-0.089	0.580	-0.052
0.750	-0.238	0.280	-0.110	0.370	-0.100	0.650	-0.103
0.810	-0.250	0.290	-0.100	0.400	-0.086	0.700	-0.090
0.840	-0.236	0.310	-0.099	0.410	1.246**	0.750	-0.115
0.900	-0.136	0.320	-0.107	0.430	-0.101	0.800	-0.124
0.960	-0.075	0.340	-0.109	0.440	-0.088	0.830	-0.162
		0.350	-0.085**	0.460	-0.097	0.900	-0.055
		0.370	-0.098	0.490	-0.075	0.960	-0.052
		0.380	-0.110	0.500	-0.101		
		0.400	-0.072	0.520	-0.108		
		0.410	-0.103	0.540	-0.087		
		0.430	-0.092	0.550	-0.075		
		0.440	-0.074	0.580	-0.071		
		0.460	-0.092	0.600	-0.100		
		0.470	-0.098	0.610	-0.105		
		0.490	-0.095	0.650	1.896**		
		0.500	-0.104	0.700	-0.163		
		0.520	-0.131	0.750	-0.189		
		0.530	-0.111	0.820	-0.224		
		0.550	-0.113	0.890	-0.258		
		0.560	-0.134	0.900	-0.193		
		0.580	-0.118	0.960	-0.065		
		0.590	-0.138				
		0.600	-0.153				
		0.640	-0.167				
		0.700	-0.184				
		0.750	-0.050**				
		0.820	-0.147				
		0.870	-0.168				
		0.930	-0.033				
		0.960	-0.001				
			Lower Surface				
0.020	-0.024	0.020	0.006	0.020	0.083	0.020	0.171
0.110	-0.108	0.060	0.002	0.060	0.084	0.060	-0.519
0.230	-0.115	0.090	-0.095	0.090	1.480**	0.110	-0.045
0.400	-0.179	0.120	-0.042	0.120	-0.109	0.250	-0.027
0.490	-0.184	0.200	-0.065	0.200	-0.092	0.400	-0.080
0.630	1.852**	0.260	-0.100	0.250	-0.098	0.490	-0.121
0.750	-0.057	0.400	-0.138	0.400	-0.136	0.580	-0.171
0.850	-0.016	0.490	-0.183	0.490	-0.053	0.650	-0.144
0.900	0.022	0.580	-0.223	0.580	-0.192	0.750	-0.133
0.960	0.020	0.640	-0.048	0.650	-0.059	0.830	-0.033
		0.750	0.047	0.750	0.013	0.900	0.042
		0.870	0.071	0.890	0.078	0.960	-0.047
		0.930	0.072	0.930	0.047		
		0.960	0.050	0.960	1.203**		

Table H-2. Continued.

Flight 217, Wing sweep = 58°, Time = 11-5-18-500, MINF = 1.227, Camber = 0/2, ALPT = 4.60, BETA = 0.31, QINF = 614.8, RNPU = 4.0E+06

η = 0.93		0.76		0.59		0.40	
			Upper Surface				
x/c	CP	*x/c*	CP	*x/c*	CP	*x/c*	CP
0.020	-0.511	0.000	0.200	0.000	3.929**	0.010	-0.490
0.060	-0.497	0.020	-0.551	0.020	-0.523	0.020	-0.510
0.110	-0.462	0.040	-0.491	0.060	-0.905**	0.060	-0.457
0.200	-0.173	0.060	-0.523	0.090	-0.487	0.110	-0.382
0.230	-0.017	0.090	-0.484	0.110	-0.503	0.140	-0.289
0.400	-0.074	0.130	-0.478	0.130	-0.429	0.190	-0.948**
0.490	-0.074	0.150	-0.460	0.150	-0.316	0.250	-0.216
0.590	-0.127	0.200	-0.328	0.210	-0.307	0.400	-0.122
0.630	-0.144	0.250	-0.142	0.250	-0.154	0.490	-0.104
0.700	-0.147	0.260	-0.123	0.340	-0.114	0.580	-0.083
0.750	-0.237	0.280	-0.127	0.370	-0.118	0.650	-0.145
0.810	-0.235	0.290	-0.127	0.400	-0.099	0.700	-0.108
0.840	-0.242	0.310	-0.119	0.410	1.236**	0.750	-0.126
0.900	-0.142	0.320	-0.127	0.430	-0.146	0.800	-0.132
0.960	-0.133	0.340	-0.125	0.440	-0.111	0.830	-0.188
		0.350	-0.096**	0.460	-0.119	0.900	-0.058
		0.370	-0.113	0.490	-0.122	0.960	-0.051
		0.380	-0.128	0.500	-0.127		
		0.400	-0.054	0.520	-0.128		
		0.410	-0.122	0.540	-0.117		
		0.430	-0.109	0.550	-0.096		
		0.440	-0.091	0.580	-0.087		
		0.460	-0.109	0.600	-0.120		
		0.470	-0.132	0.610	-0.131		
		0.490	-0.114	0.650	1.883**		
		0.500	-0.117	0.700	-0.180		
		0.520	-0.126	0.750	-0.208		
		0.530	-0.127	0.820	-0.245		
		0.550	-0.151	0.890	-0.277		
		0.560	-0.151	0.900	-0.196		
		0.580	-0.147	0.960	-0.087		
		0.590	-0.158				
		0.600	-0.163				
		0.640	-0.185				
		0.700	-0.203				
		0.750	-0.051**				
		0.820	-0.156				
		0.870	-0.174				
		0.930	-0.040				
		0.960	-0.008				
			Lower Surface				
0.020	-0.017	0.020	0.049	0.020	0.113	0.020	0.207
0.110	-0.075	0.060	0.037	0.060	0.110	0.060	-0.493
0.230	-0.081	0.090	-0.047	0.090	1.469**	0.110	-0.025
0.400	-0.140	0.120	-0.051	0.120	-0.085	0.250	-0.014
0.490	-0.175	0.200	-0.033	0.200	-0.072	0.400	-0.066
0.630	1.840**	0.260	-0.079	0.250	-0.069	0.490	-0.105
0.750	-0.065	0.400	-0.115	0.400	-0.119	0.580	-0.151
0.850	-0.040	0.490	-0.156	0.490	-0.052	0.650	-0.127
0.900	-0.005	0.580	-0.212	0.580	-0.184	0.750	-0.092
0.960	-0.010	0.640	-0.018	0.650	-0.114	0.830	-0.038
		0.750	0.047	0.750	0.035	0.900	0.058
		0.870	0.071	0.890	0.085	0.960	-0.050
		0.930	0.071	0.930	0.056		
		0.960	0.041	0.960	1.194**		

Table H-2. Continued.

Flight 217, Wing sweep = 58°, Time = 11-5-19-500, MINF = 1.228, Camber = 0/2, ALPT = 5.85, BETA = 0.28, QINF = 617.9, RNPU = 4.0E+06

η = 0.93		0.76		0.59		0.40	
			Upper Surface				
x/c	CP	*x/c*	CP	*x/c*	CP	*x/c*	CP
0.020	-0.684	0.000	0.041	0.000	3.905**	0.010	-0.682
0.060	-0.681	0.020	-0.726	0.020	-0.711	0.020	-0.702
0.110	-0.680	0.040	-0.686	0.060	-0.904**	0.060	-0.619
0.200	-0.623	0.060	-0.694	0.090	-0.669	0.110	-0.594
0.230	-0.327	0.090	-0.607	0.110	-0.706	0.140	-0.479
0.400	-0.209	0.130	-0.655	0.130	-0.594	0.190	-0.947**
0.490	-0.207	0.150	-0.648	0.150	-0.620	0.250	-0.307
0.590	-0.238	0.200	-0.613	0.210	-0.550	0.400	-0.269
0.630	-0.244	0.250	-0.409	0.250	-0.328	0.490	-0.222
0.700	-0.255	0.260	-0.373	0.340	-0.425	0.580	-0.214
0.750	-0.347	0.280	-0.358	0.370	-0.211	0.650	-0.246
0.810	-0.351	0.290	-0.324	0.400	-0.190	0.700	-0.237
0.840	-0.517	0.310	-0.297	0.410	1.226**	0.750	-0.261
0.900	-0.244	0.320	-0.302	0.430	-0.261	0.800	-0.307
0.960	-0.133	0.340	-0.278	0.440	-0.250	0.830	-0.319
		0.350	-0.209**	0.460	-0.259	0.900	-0.061
		0.370	-0.250	0.490	-0.232	0.960	-0.112
		0.380	-0.206	0.500	-0.263		
		0.400	-0.215	0.520	-0.210		
		0.410	-0.256	0.540	-0.257		
		0.430	-0.245	0.550	-0.239		
		0.440	-0.230	0.580	-0.183		
		0.460	-0.407	0.600	-0.263		
		0.470	-0.258	0.610	-0.274		
		0.490	-0.193	0.650	1.870**		
		0.500	-0.252	0.700	-0.314		
		0.520	-0.262	0.750	-0.356		
		0.530	-0.265	0.820	-0.392		
		0.550	-0.286	0.890	-0.438		
		0.560	-0.288	0.900	-0.342		
		0.580	-0.276	0.960	-0.236		
		0.590	-0.236				
		0.600	-0.300				
		0.640	-0.319				
		0.700	-0.340				
		0.750	-0.165**				
		0.820	-0.278				
		0.870	-0.248				
		0.930	-0.157				
		0.960	-0.138				
			Lower Surface				
0.020	-0.087	0.020	-0.016	0.020	0.033	0.020	0.120
0.110	-0.154	0.060	-0.044	0.060	0.021	0.060	-0.587
0.230	-0.162	0.090	-0.138	0.090	1.458**	0.110	-0.051
0.400	-0.255	0.120	-0.122	0.120	-0.112	0.250	-0.057
0.490	-0.288	0.200	-0.124	0.200	-0.166	0.400	-0.163
0.630	1.827**	0.260	-0.157	0.250	-0.158	0.490	-0.199
0.750	-0.171	0.400	-0.205	0.400	-0.144	0.580	-0.249
0.850	-0.205	0.490	-0.245	0.490	-0.324	0.650	-0.169
0.900	-0.128	0.580	-0.315	0.580	-0.275	0.750	-0.337
0.960	-0.069	0.640	-0.097	0.650	-0.221	0.830	-0.145
		0.750	-0.039	0.750	-0.006	0.900	-0.080
		0.870	-0.029	0.890	-0.019	0.960	-0.325
		0.930	-0.045	0.930	-0.051		
		0.960	-0.082	0.960	1.184**		

Table H-2. Continued.

Flight 217, Wing sweep = 58°, Time = 11-5-20-500, MINF = 1.226, Camber = 0/2, ALPT = 6.83, BETA = 0.31, QINF = 618.7, RNPU = 4.0E+06

η = 0.93		0.76		0.59		0.40	
			Upper Surface				
x/c	CP	*x/c*	CP	*x/c*	CP	*x/c*	CP
0.020	-0.603	0.000	0.126	0.000	3.897**	0.010	-0.609
0.060	-0.593	0.020	-0.721	0.020	-0.645	0.020	-0.615
0.110	-0.556	0.040	-0.595	0.060	-0.907**	0.060	-0.546
0.200	-0.541	0.060	-0.600	0.090	-0.595	0.110	-0.518
0.230	-0.491	0.090	-0.577	0.110	-0.618	0.140	-0.424
0.400	-0.166	0.130	-0.578	0.130	-0.576	0.190	-0.950**
0.490	-0.101	0.150	-0.573	0.150	-0.557	0.250	-0.272
0.590	-0.111	0.200	-0.539	0.210	-0.548	0.400	-0.173
0.630	-0.118	0.250	-0.359	0.250	-0.282	0.490	-0.217
0.700	-0.137	0.260	-0.325	0.340	-0.169	0.580	-0.086
0.750	-0.219	0.280	-0.330	0.370	-0.173	0.650	-0.137
0.810	-0.217	0.290	-0.306	0.400	-0.139	0.700	-0.118
0.840	-0.224	0.310	-0.285	0.410	1.221**	0.750	-0.155
0.900	-0.107	0.320	-0.284	0.430	-0.159	0.800	-0.145
0.960	-0.054	0.340	-0.260	0.440	-0.139	0.830	-0.211
		0.350	-0.133**	0.460	-0.151	0.900	-0.048
		0.370	-0.201	0.490	-0.130	0.960	-0.042
		0.380	-0.198	0.500	-0.162		
		0.400	-0.134	0.520	-0.159		
		0.410	-0.146	0.540	-0.159		
		0.430	-0.122	0.550	-0.139		
		0.440	-0.122	0.580	-0.132		
		0.460	-0.143	0.600	-0.168		
		0.470	-0.150	0.610	-0.166		
		0.490	-0.131	0.650	1.864**		
		0.500	-0.155	0.700	-0.208		
		0.520	-0.146	0.750	-0.245		
		0.530	-0.153	0.820	-0.295		
		0.550	-0.180	0.890	-0.335		
		0.560	-0.183	0.900	-0.243		
		0.580	-0.165	0.960	-0.128		
		0.590	-0.180				
		0.600	-0.193				
		0.640	-0.215				
		0.700	-0.236				
		0.750	-0.038**				
		0.820	-0.149				
		0.870	-0.098				
		0.930	-0.039				
		0.960	-0.029				
			Lower Surface				
0.020	0.071	0.020	0.129	0.020	0.182	0.020	0.268
0.110	0.002	0.060	0.104	0.060	0.157	0.060	-0.402
0.230	-0.020	0.090	0.014	0.090	1.453**	0.110	0.151
0.400	-0.128	0.120	0.024	0.120	-0.029	0.250	0.025
0.490	-0.154	0.200	0.028	0.200	-0.019	0.400	-0.028
0.630	1.821**	0.260	-0.006	0.250	-0.013	0.490	-0.056
0.750	-0.048	0.400	-0.063	0.400	-0.061	0.580	-0.108
0.850	-0.028	0.490	-0.093	0.490	-0.327	0.650	-0.086
0.900	-0.003	0.580	-0.178	0.580	-0.134	0.750	-0.052
0.960	0.001	0.640	0.039	0.650	-0.224	0.830	-0.016
		0.750	0.094	0.750	0.076	0.900	0.045
		0.870	0.098	0.890	0.108	0.960	-0.040
		0.930	0.073	0.930	0.086		
		0.960	0.042	0.960	1.179**		

Table H-2. Continued.

Flight 217, Wing sweep = 58°, Time = 11-5-21-500, MINF = 1.225, Camber = 0/2, ALPT = 7.64, BETA = 0.28, QINF = 618.8, RNPU = 4.0E+06

η = 0.93		0.76		0.59		0.40	
			Upper Surface				
x/c	CP	*x/c*	CP	*x/c*	CP	*x/c*	CP
0.020	-0.656	0.000	0.107	0.000	3.893**	0.010	-0.611
0.060	-0.627	0.020	-0.686	0.020	-0.672	0.020	-0.662
0.110	-0.637	0.040	-0.638	0.060	-0.910**	0.060	-0.619
0.200	-0.590	0.060	-0.649	0.090	-0.635	0.110	-0.529
0.230	-0.520	0.090	-0.615	0.110	-0.661	0.140	-0.441
0.400	-0.249	0.130	-0.590	0.130	-0.621	0.190	-0.953**
0.490	-0.187	0.150	-0.601	0.150	-0.598	0.250	-0.268
0.590	-0.146	0.200	-0.573	0.210	-0.563	0.400	-0.203
0.630	-0.133	0.250	-0.395	0.250	-0.348	0.490	-0.267
0.700	-0.139	0.260	-0.361	0.340	-0.212	0.580	-0.109
0.750	-0.218	0.280	-0.375	0.370	-0.181	0.650	-0.146
0.810	-0.216	0.290	-0.365	0.400	-0.135	0.700	-0.131
0.840	-0.222	0.310	-0.346	0.410	1.218**	0.750	-0.158
0.900	-0.094	0.320	-0.354	0.430	-0.159	0.800	-0.162
0.960	-0.048	0.340	-0.348	0.440	-0.162	0.830	-0.210
		0.350	-0.171**	0.460	-0.169	0.900	-0.045
		0.370	-0.309	0.490	-0.141	0.960	-0.045
		0.380	-0.322	0.500	-0.186		
		0.400	-0.260	0.520	-0.183		
		0.410	-0.262	0.540	-0.186		
		0.430	-0.212	0.550	-0.163		
		0.440	-0.177	0.580	-0.141		
		0.460	-0.191	0.600	-0.178		
		0.470	-0.187	0.610	-0.179		
		0.490	-0.161	0.650	1.861**		
		0.500	-0.153	0.700	-0.215		
		0.520	-0.164	0.750	-0.259		
		0.530	-0.165	0.820	-0.322		
		0.550	-0.177	0.890	-0.344		
		0.560	-0.175	0.900	-0.268		
		0.580	-0.164	0.960	-0.141		
		0.590	-0.175				
		0.600	-0.190				
		0.640	-0.219				
		0.700	-0.238				
		0.750	-0.032**				
		0.820	-0.121				
		0.870	-0.067				
		0.930	-0.040				
		0.960	-0.037				
			Lower Surface				
0.020	0.094	0.020	0.150	0.020	0.216	0.020	0.296
0.110	0.019	0.060	0.139	0.060	0.196	0.060	-0.363
0.230	0.013	0.090	0.044	0.090	1.450**	0.110	0.158
0.400	-0.117	0.120	0.058	0.120	0.005	0.250	0.028
0.490	-0.114	0.200	0.065	0.200	0.017	0.400	0.005
0.630	1.818**	0.260	0.009	0.250	0.012	0.490	-0.037
0.750	-0.039	0.400	-0.036	0.400	-0.038	0.580	-0.091
0.850	-0.015	0.490	-0.085	0.490	-0.035	0.650	-0.060
0.900	0.007	0.580	-0.171	0.580	-0.109	0.750	-0.026
0.960	0.009	0.640	0.068	0.650	-0.227	0.830	0.000
		0.750	0.111	0.750	0.091	0.900	0.048
		0.870	0.106	0.890	0.123	0.960	-0.026
		0.930	0.072	0.930	0.073		
		0.960	0.035	0.960	1.176**		

Table H-2. Continued.

Flight 217, Wing sweep = 58°, Time = 11-5-22-500, MINF = 1.220, Camber = 0/2, ALPT = 8.44, BETA = 0.34, QINF = 616.2, RNPU = 4.0E+06

η = 0.93		0.76		0.59		0.40	
			Upper Surface				
x/c	CP	*x/c*	CP	*x/c*	CP	*x/c*	CP
0.020	-0.708	0.000	0.067	0.000	3.907**	0.010	-0.671
0.060	-0.668	0.020	-0.733	0.020	-0.719	0.020	-0.711
0.110	-0.656	0.040	-0.687	0.060	-0.916**	0.060	-0.662
0.200	-0.626	0.060	-0.684	0.090	-0.671	0.110	-0.541
0.230	-0.385	0.090	-0.663	0.110	-0.699	0.140	-0.470
0.400	-0.318	0.130	-0.653	0.130	-0.658	0.190	-0.959**
0.490	-0.288	0.150	-0.649	0.150	-0.635	0.250	-0.306
0.590	-0.249	0.200	-0.624	0.210	-0.463	0.400	-0.244
0.630	-0.215	0.250	-0.431	0.250	-0.412	0.490	-0.360
0.700	-0.190	0.260	-0.398	0.340	-0.336	0.580	-0.146
0.750	-0.215	0.280	-0.411	0.370	-0.266	0.650	-0.149
0.810	-0.205	0.290	-0.403	0.400	-0.170	0.700	-0.145
0.840	-0.205	0.310	-0.394	0.410	1.221**	0.750	-0.170
0.900	-0.100	0.320	-0.404	0.430	-0.158	0.800	-0.158
0.960	-0.052	0.340	-0.412	0.440	-0.155	0.830	-0.223
		0.350	-0.214**	0.460	-0.177	0.900	-0.061
		0.370	-0.385	0.490	-0.143	0.960	-0.037
		0.380	-0.410	0.500	-0.187		
		0.400	-0.352	0.520	-0.200		
		0.410	-0.378	0.540	-0.182		
		0.430	-0.344	0.550	-0.172		
		0.440	-0.312	0.580	-0.175		
		0.460	-0.322	0.600	-0.193		
		0.470	-0.308	0.610	-0.202		
		0.490	-0.283	0.650	1.866**		
		0.500	-0.263	0.700	-0.262		
		0.520	-0.264	0.750	-0.298		
		0.530	-0.241	0.820	-0.386		
		0.550	-0.228	0.890	-0.374		
		0.560	-0.232	0.900	-0.272		
		0.580	-0.207	0.960	-0.141		
		0.590	-0.203				
		0.600	-0.212				
		0.640	-0.221				
		0.700	-0.240				
		0.750	-0.049**				
		0.820	-0.110				
		0.870	-0.071				
		0.930	-0.039				
		0.960	-0.039				
			Lower Surface				
0.020	0.119	0.020	0.163	0.020	0.239	0.020	0.338
0.110	0.035	0.060	0.145	0.060	0.201	0.060	-0.377
0.230	0.033	0.090	0.054	0.090	1.453**	0.110	0.133
0.400	-0.134	0.120	0.089	0.120	0.014	0.250	0.038
0.490	-0.023	0.200	0.085	0.200	0.004	0.400	0.013
0.630	1.823**	0.260	0.024	0.250	0.042	0.490	-0.025
0.750	-0.051	0.400	-0.016	0.400	-0.025	0.580	-0.084
0.850	-0.026	0.490	-0.093	0.490	-0.041	0.650	-0.059
0.900	0.004	0.580	-0.180	0.580	-0.105	0.750	-0.023
0.960	0.001	0.640	0.071	0.650	-0.231	0.830	-0.017
		0.750	0.117	0.750	0.089	0.900	0.035
		0.870	0.090	0.890	0.121	0.960	-0.043
		0.930	0.054	0.930	0.096		
		0.960	0.015	0.960	1.178**		

Table H-2. Continued.

Flight 217, Wing sweep = 58°, Time = 11-5-26-500, MINF = 1.195, Camber = 0/2, ALPT = 9.20, BETA = 0.31, QINF = 587.5, RNPU = 3.8E+06

η = 0.93		0.76		0.59		0.40	
			Upper Surface				
x/c	CP	*x/c*	CP	*x/c*	CP	*x/c*	CP
0.020	-1.205	0.000	-0.383	0.000	4.103**	0.010	-1.158
0.060	-1.160	0.020	-1.219	0.020	-1.185	0.020	-1.178
0.110	-1.211	0.040	-1.163	0.060	-0.956**	0.060	-1.145
0.200	-0.920	0.060	-1.171	0.090	-1.138	0.110	-0.976
0.230	-0.881	0.090	-1.133	0.110	-1.169	0.140	-0.922
0.400	-0.814	0.130	-1.112	0.130	-1.049	0.190	-1.001**
0.490	-0.786	0.150	-0.948	0.150	-0.951	0.250	-0.764
0.590	-0.771	0.200	-0.939	0.210	-0.936	0.400	-0.685
0.630	-0.717	0.250	-0.915	0.250	-0.887	0.490	-0.764
0.700	-0.665	0.260	-0.881	0.340	-0.852	0.580	-0.596
0.750	-0.618	0.280	-0.899	0.370	-0.766	0.650	-0.580
0.810	-0.608	0.290	-0.894	0.400	-0.556	0.700	-0.566
0.840	-0.611	0.310	-0.874	0.410	1.285**	0.750	-0.588
0.900	-0.534	0.320	-0.880	0.430	-0.557	0.800	-0.580
0.960	-0.479	0.340	-0.882	0.440	-0.569	0.830	-0.638
		0.350	-0.644**	0.460	-0.586	0.900	-0.473
		0.370	-0.850	0.490	-0.561	0.960	-0.468
		0.380	-0.884	0.500	-0.610		
		0.400	-0.830	0.520	-0.613		
		0.410	-0.856	0.540	-0.616		
		0.430	-0.843	0.550	-0.592		
		0.440	-0.792	0.580	-0.613		
		0.460	-0.834	0.600	-0.632		
		0.470	-0.833	0.610	-0.637		
		0.490	-0.800	0.650	1.962**		
		0.500	-0.775	0.700	-0.694		
		0.520	-0.795	0.750	-0.744		
		0.530	-0.767	0.820	-0.846		
		0.550	-0.754	0.890	-0.778		
		0.560	-0.717	0.900	-0.696		
		0.580	-0.686	0.960	-0.555		
		0.590	-0.667				
		0.600	-0.643				
		0.640	-0.632				
		0.700	-0.656				
		0.750	-0.343**				
		0.820	-0.496				
		0.870	-0.477				
		0.930	-0.450				
		0.960	-0.437				
			Lower Surface				
0.020	-0.276	0.020	-0.227	0.020	-0.145	0.020	-0.071
0.110	-0.357	0.060	-0.238	0.060	-0.188	0.060	-0.814
0.230	-0.391	0.090	-0.334	0.090	1.529**	0.110	-0.267
0.400	-0.469	0.120	-0.326	0.120	-0.364	0.250	-0.365
0.490	-0.412	0.200	-0.313	0.200	-0.376	0.400	-0.399
0.630	1.917**	0.260	-0.378	0.250	-0.356	0.490	-0.410
0.750	-0.453	0.400	-0.444	0.400	-0.434	0.580	-0.471
0.850	-0.445	0.490	-0.514	0.490	-0.458	0.650	-0.457
0.900	-0.399	0.580	-0.452	0.580	-0.517	0.750	-0.441
0.960	-0.410	0.640	-0.318	0.650	-0.465	0.830	-0.416
		0.750	-0.292	0.750	-0.310	0.900	-0.358
		0.870	-0.340	0.890	-0.288	0.960	-0.448
		0.930	-0.347	0.930	-0.302		
		0.960	-0.384	0.960	1.241**		

Table H-2. Continued.

Flight 217, Wing sweep = 58°, Time = 11-7-27-500, MINF = 1.185, Camber = 2/1, ALPT = 5.52, BETA = 0.34, QINF = 573.8, RNPU = 3.8E+06

η = 0.93		0.76		0.59		0.40	
			Upper Surface				
x/c	CP	*x/c*	CP	*x/c*	CP	*x/c*	CP
0.020	-0.518	0.000	0.201	0.000	4.208**	0.010	-0.528
0.060	-0.480	0.020	-0.557	0.020	-0.535	0.020	-0.534
0.110	-0.451	0.040	-0.476	0.060	-0.972**	0.060	-0.499
0.200	-0.228	0.060	-0.519	0.090	-0.501	0.110	-0.432
0.230	-0.151	0.090	-0.495	0.110	-0.533	0.140	-0.340
0.400	-0.121	0.130	-0.498	0.130	-0.515	0.190	-1.018**
0.490	-0.130	0.150	-0.513	0.150	-0.501	0.250	-0.189
0.590	-0.161	0.200	-0.457	0.210	-0.331	0.400	-0.140
0.630	-0.175	0.250	-0.192	0.250	-0.157	0.490	-0.137
0.700	-0.169	0.260	-0.166	0.340	-0.141	0.580	-0.095
0.750	-0.202	0.280	-0.178	0.370	-0.151	0.650	-0.138
0.810	-0.194	0.290	-0.157	0.400	-0.132	0.700	-0.128
0.840	-0.204	0.310	-0.154	0.410	1.323**	0.750	-0.146
0.900	-0.098	0.320	-0.169	0.430	-0.150	0.800	-0.158
0.960	-0.070	0.340	-0.162	0.440	-0.148	0.830	-0.206
		0.350	-0.090**	0.460	-0.149	0.900	-0.038
		0.370	-0.149	0.490	-0.119	0.960	-0.042
		0.380	-0.159	0.500	-0.161		
		0.400	-0.131	0.520	-0.159		
		0.410	-0.163	0.540	-0.141		
		0.430	-0.161	0.550	-0.121		
		0.440	-0.121	0.580	-0.130		
		0.460	-0.147	0.600	-0.164		
		0.470	-0.163	0.610	-0.163		
		0.490	-0.148	0.650	2.016**		
		0.500	-0.160	0.700	-0.207		
		0.520	-0.154	0.750	-0.229		
		0.530	-0.167	0.820	-0.265		
		0.550	-0.202	0.890	-0.261		
		0.560	-0.191	0.900	-0.176		
		0.580	-0.172	0.960	-0.082		
		0.590	-0.192				
		0.600	-0.193				
		0.640	-0.217				
		0.700	-0.233				
		0.750	-0.040**				
		0.820	-0.136				
		0.870	-0.097				
		0.930	-0.039				
		0.960	-0.015				
			Lower Surface				
0.020	-0.022	0.020	0.041	0.020	0.093	0.020	0.178
0.110	-0.054	0.060	0.043	0.060	0.117	0.060	-0.485
0.230	-0.057	0.090	-0.050	0.090	1.572**	0.110	0.091
0.400	-0.182	0.120	-0.021	0.120	-0.076	0.250	-0.024
0.490	-0.206	0.200	-0.026	0.200	-0.043	0.400	-0.046
0.630	1.969**	0.260	-0.041	0.250	-0.048	0.490	-0.087
0.750	-0.095	0.400	-0.088	0.400	-0.086	0.580	-0.145
0.850	-0.059	0.490	-0.143	0.490	-0.054	0.650	-0.125
0.900	-0.025	0.580	-0.232	0.580	-0.161	0.750	-0.087
0.960	-0.010	0.640	-0.005	0.650	-0.050	0.830	-0.015
		0.750	0.063	0.750	0.042	0.900	0.093
		0.870	0.053	0.890	0.055	0.960	-0.045
		0.930	0.047	0.930	0.038		
		0.960	0.029	0.960	1.277**		

Table H-2. Continued.

Flight 218, Wing sweep = 58°, Time = 10-23-32-500, MINF = 1.211, Camber = 0/2, ALPT = 4.52, BETA = 0.45, QINF = 587.2, RNPU = 3.8E+06

η = 0.93		0.76		0.59		0.40	
			Upper Surface				
x/c	CP	*x/c*	CP	*x/c*	CP	*x/c*	CP
0.020	-0.515	0.000	0.220	0.000	4.125**	0.010	-0.494
0.060	-0.507	0.020	-0.586	0.020	-0.527	0.020	-0.505
0.110	-0.466	0.040	-0.476	0.060	-2.039**	0.060	-0.435
0.200	-0.104	0.060	-0.530	0.090	-0.481	0.110	-0.323
0.230	-0.028	0.090	-0.482	0.110	-0.513	0.140	-0.274
0.400	-0.047	0.130	-0.470	0.130	-0.386	0.190	-0.975**
0.490	-0.073	0.150	-0.391	0.150	-0.303	0.250	-0.183
0.590	-0.118	0.200	-0.230	0.210	-0.256	0.400	-0.095
0.630	-0.128	0.250	-0.117	0.250	-0.110	0.490	-0.077
0.700	-0.127	0.260	-0.082	0.340	-0.090	0.580	-0.041
0.750	-0.221	0.280	-0.091	0.370	-0.095	0.650	-0.091
0.810	-0.228	0.290	-0.102	0.400	-0.098	0.700	-0.081
0.840	-0.221	0.310	-0.093	0.410	-1.045**	0.750	-0.100
0.900	-0.111	0.320	-0.098	0.430	-0.099	0.800	-0.134
0.960	-0.056	0.340	-0.102	0.440	-0.091	0.830	-0.161
		0.350	-0.073**	0.460	-0.095	0.900	-0.017
		0.370	-0.092	0.490	-0.065	0.960	-0.021
		0.380	-0.115	0.500	-0.109		
		0.400	-0.063	0.520	-0.101		
		0.410	-0.103	0.540	-0.104		
		0.430	-0.087	0.550	-0.074		
		0.440	-0.063	0.580	-0.063		
		0.460	-0.101	0.600	-0.107		
		0.470	-0.096	0.610	-0.109		
		0.490	-0.095	0.650	1.082**		
		0.500	-0.074	0.700	-0.156		
		0.520	-0.103	0.750	-0.198		
		0.530	-0.110	0.820	-0.226		
		0.550	-0.135	0.890	-0.244		
		0.560	-0.132	0.900	-0.156		
		0.580	-0.114	0.960	-0.055		
		0.590	-0.147				
		0.600	-0.145				
		0.640	-0.162				
		0.700	-0.187				
		0.750	-0.027**				
		0.820	-0.134				
		0.870	-0.136				
		0.930	-0.013				
		0.960	0.017				
			Lower Surface				
0.020	-0.006	0.020	0.057	0.020	0.127	0.020	0.230
0.110	-0.047	0.060	0.058	0.060	0.130	0.060	-0.495
0.230	-0.049	0.090	-0.034	0.090	0.581**	0.110	-0.015
0.400	-0.150	0.120	-0.019	0.120	-0.093	0.250	0.006
0.490	-0.178	0.200	-0.009	0.200	-0.067	0.400	-0.040
0.630	0.914**	0.260	-0.061	0.250	-0.030	0.490	-0.089
0.750	-0.046	0.400	-0.098	0.400	-0.088	0.580	-0.134
0.850	-0.019	0.490	-0.139	0.490	-0.015	0.650	-0.109
0.900	0.020	0.580	-0.197	0.580	-0.154	0.750	-0.075
0.960	0.020	0.640	0.006	0.650	-0.029	0.830	-0.007
		0.750	0.109	0.750	0.058	0.900	0.090
		0.870	0.107	0.890	0.107	0.960	-0.027
		0.930	0.096	0.930	0.073		
		0.960	0.072	0.960	-1.089**		

Table H-2. Continued.

Flight 218, Wing sweep = 58°, Time = 10-23-35-000, MINF = 1.213, Camber = 0/2, ALPT = 3.57, BETA = 0.45, QINF = 588.8, RNPU = 3.8E+06

η = 0.93		0.76		0.59		0.40	
			Upper Surface				
x/c	CP	*x/c*	CP	*x/c*	CP	*x/c*	CP
0.020	-0.432	0.000	0.258	0.000	4.115**	0.010	-0.386
0.060	-0.397	0.020	-0.505	0.020	-0.448	0.020	-0.460
0.110	-0.078	0.040	-0.415	0.060	-2.032**	0.060	-0.351
0.200	-0.078	0.060	-0.466	0.090	-0.353	0.110	-0.267
0.230	-0.044	0.090	-0.377	0.110	-0.311	0.140	-0.225
0.400	-0.056	0.130	-0.215	0.130	-0.236	0.190	-0.971**
0.490	-0.063	0.150	-0.128	0.150	-0.204	0.250	-0.149
0.590	-0.117	0.200	-0.094	0.210	-0.191	0.400	-0.058
0.630	-0.129	0.250	-0.069	0.250	-0.054	0.490	-0.035
0.700	-0.129	0.260	-0.060	0.340	-0.047	0.580	-0.017
0.750	-0.214	0.280	-0.078	0.370	-0.067	0.650	-0.070
0.810	-0.208	0.290	-0.078	0.400	-0.059	0.700	-0.062
0.840	-0.212	0.310	-0.072	0.410	-1.041**	0.750	-0.080
0.900	-0.104	0.320	-0.072	0.430	-0.068	0.800	-0.104
0.960	-0.037	0.340	-0.072	0.440	-0.049	0.830	-0.138
		0.350	-0.049**	0.460	-0.066	0.900	-0.027
		0.370	-0.063	0.490	-0.025	0.960	-0.020
		0.380	-0.083	0.500	-0.073		
		0.400	-0.027	0.520	-0.067		
		0.410	-0.079	0.540	-0.061		
		0.430	-0.065	0.550	-0.044		
		0.440	-0.013	0.580	-0.063		
		0.460	-0.067	0.600	-0.070		
		0.470	-0.055	0.610	-0.079		
		0.490	-0.064	0.650	1.080**		
		0.500	-0.076	0.700	-0.126		
		0.520	-0.106	0.750	-0.169		
		0.530	-0.082	0.820	-0.198		
		0.550	-0.117	0.890	-0.229		
		0.560	-0.102	0.900	-0.159		
		0.580	-0.092	0.960	-0.027		
		0.590	-0.120				
		0.600	-0.127				
		0.640	-0.136				
		0.700	-0.163				
		0.750	-0.015**				
		0.820	-0.110				
		0.870	-0.135				
		0.930	0.003				
		0.960	0.036				
			Lower Surface				
0.020	-0.049	0.020	0.025	0.020	0.115	0.020	0.208
0.110	-0.079	0.060	0.030	0.060	0.115	0.060	-0.504
0.230	-0.083	0.090	-0.067	0.090	0.580**	0.110	-0.017
0.400	-0.157	0.120	-0.035	0.120	-0.107	0.250	-0.001
0.490	-0.161	0.200	-0.038	0.200	-0.072	0.400	-0.050
0.630	0.913**	0.260	-0.078	0.250	-0.061	0.490	-0.096
0.750	-0.014	0.400	-0.105	0.400	-0.104	0.580	-0.137
0.850	0.028	0.490	-0.149	0.490	-0.018	0.650	-0.116
0.900	0.061	0.580	-0.196	0.580	-0.166	0.750	-0.109
0.960	0.058	0.640	-0.013	0.650	-0.039	0.830	0.001
		0.750	0.083	0.750	0.043	0.900	0.070
		0.870	0.111	0.890	0.106	0.960	-0.012
		0.930	0.108	0.930	0.084		
		0.960	0.084	0.960	-1.085**		

Table H-2. Continued.

Flight 218, Wing sweep = 58°, Time = 10-23-38-500, MINF = 1.218, Camber = 0/2, ALPT = 2.78, BETA = 0.54, QINF = 596.0, RNPU = 3.9E+06

η = 0.93		0.76		0.59		0.40	
			Upper Surface				
x/c	CP	*x/c*	CP	*x/c*	CP	*x/c*	CP
0.020	-0.295	0.000	0.302	0.000	4.061**	0.010	-0.374
0.060	-0.034	0.020	-0.400	0.020	-0.391	0.020	-0.409
0.110	-0.050	0.040	-0.361	0.060	-2.011**	0.060	-0.322
0.200	-0.077	0.060	-0.270	0.090	-0.196	0.110	-0.227
0.230	-0.034	0.090	-0.136	0.110	-0.224	0.140	-0.200
0.400	-0.066	0.130	-0.143	0.130	-0.155	0.190	-0.963**
0.490	-0.084	0.150	-0.082	0.150	-0.172	0.250	-0.130
0.590	-0.112	0.200	-0.065	0.210	-0.179	0.400	-0.036
0.630	-0.122	0.250	-0.058	0.250	-0.027	0.490	0.000
0.700	-0.139	0.260	-0.035	0.340	-0.024	0.580	0.019
0.750	-0.206	0.280	-0.074	0.370	-0.051	0.650	-0.070
0.810	-0.202	0.290	-0.061	0.400	-0.040	0.700	-0.045
0.840	-0.195	0.310	-0.071	0.410	-1.032**	0.750	-0.082
0.900	-0.104	0.320	-0.065	0.430	-0.066	0.800	-0.099
0.960	-0.018	0.340	-0.069	0.440	-0.049	0.830	-0.141
		0.350	-0.063**	0.460	-0.059	0.900	-0.014
		0.370	-0.042	0.490	-0.006	0.960	-0.023
		0.380	-0.064	0.500	-0.059		
		0.400	-0.012	0.520	-0.058		
		0.410	-0.065	0.540	-0.046		
		0.430	-0.054	0.550	-0.028		
		0.440	-0.017	0.580	-0.029		
		0.460	-0.045	0.600	-0.044		
		0.470	-0.060	0.610	-0.054		
		0.490	-0.051	0.650	1.064**		
		0.500	-0.055	0.700	-0.119		
		0.520	-0.062	0.750	-0.152		
		0.530	-0.061	0.820	-0.175		
		0.550	-0.094	0.890	-0.210		
		0.560	-0.088	0.900	-0.150		
		0.580	-0.077	0.960	-0.021		
		0.590	-0.102				
		0.600	-0.107				
		0.640	-0.121				
		0.700	-0.139				
		0.750	-0.013**				
		0.820	-0.100				
		0.870	-0.133				
		0.930	0.010				
		0.960	0.043				
			Lower Surface				
0.020	-0.059	0.020	0.001	0.020	0.098	0.020	0.174
0.110	-0.111	0.060	0.006	0.060	0.101	0.060	-0.535
0.230	-0.116	0.090	-0.109	0.090	0.570**	0.110	-0.043
0.400	-0.172	0.120	-0.060	0.120	-0.119	0.250	-0.007
0.490	-0.174	0.200	-0.060	0.200	-0.078	0.400	-0.078
0.630	0.898**	0.260	-0.117	0.250	-0.081	0.490	-0.102
0.750	0.009	0.400	-0.124	0.400	-0.128	0.580	-0.158
0.850	0.051	0.490	-0.167	0.490	-0.035	0.650	-0.140
0.900	0.082	0.580	-0.219	0.580	-0.200	0.750	-0.124
0.960	0.071	0.640	-0.048	0.650	-0.022	0.830	-0.009
		0.750	0.080	0.750	0.013	0.900	0.061
		0.870	0.104	0.890	0.085	0.960	-0.015
		0.930	0.107	0.930	0.080		
		0.960	0.085	0.960	-1.075**		

Table H-2. Continued.

Flight 218, Wing sweep = 58°, Time = 10-23-43-500, MINF = 1.228, Camber = 0/2, ALPT = 6.60, BETA = 0.43, QINF = 620.2, RNPU = 4.0E+06

η = 0.93		0.76		0.59		0.40	
			Upper Surface				
x/c	CP	*x/c*	CP	*x/c*	CP	*x/c*	CP
0.020	-0.577	0.000	0.158	0.000	3.881**	0.010	-0.567
0.060	-0.553	0.020	-0.717	0.020	-0.615	0.020	-0.597
0.110	-0.550	0.040	-0.575	0.060	-1.955**	0.060	-0.524
0.200	-0.517	0.060	-0.593	0.090	-0.573	0.110	-0.477
0.230	-0.461	0.090	-0.554	0.110	-0.612	0.140	-0.386
0.400	-0.120	0.130	-0.553	0.130	-0.555	0.190	-0.948**
0.490	-0.074	0.150	-0.547	0.150	-0.535	0.250	-0.244
0.590	-0.086	0.200	-0.509	0.210	-0.517	0.400	-0.149
0.630	-0.094	0.250	-0.350	0.250	-0.243	0.490	-0.183
0.700	-0.105	0.260	-0.291	0.340	-0.148	0.580	-0.070
0.750	-0.203	0.280	-0.289	0.370	-0.152	0.650	-0.114
0.810	-0.206	0.290	-0.268	0.400	-0.143	0.700	-0.107
0.840	-0.203	0.310	-0.242	0.410	-1.014**	0.750	-0.131
0.900	-0.092	0.320	-0.246	0.430	-0.134	0.800	-0.134
0.960	-0.042	0.340	-0.209	0.440	-0.120	0.830	-0.183
		0.350	-0.116**	0.460	-0.131	0.900	-0.034
		0.370	-0.151	0.490	-0.098	0.960	-0.025
		0.380	-0.159	0.500	-0.137		
		0.400	-0.097	0.520	-0.129		
		0.410	-0.130	0.540	-0.125		
		0.430	-0.111	0.550	-0.112		
		0.440	-0.087	0.580	-0.111		
		0.460	-0.119	0.600	-0.136		
		0.470	-0.123	0.610	-0.142		
		0.490	-0.117	0.650	1.000**		
		0.500	-0.102	0.700	-0.182		
		0.520	-0.132	0.750	-0.228		
		0.530	-0.131	0.820	-0.268		
		0.550	-0.164	0.890	-0.315		
		0.560	-0.147	0.900	-0.205		
		0.580	-0.147	0.960	-0.112		
		0.590	-0.164				
		0.600	-0.172				
		0.640	-0.189				
		0.700	-0.210				
		0.750	-0.019**				
		0.820	-0.137				
		0.870	-0.084				
		0.930	-0.018				
		0.960	-0.003				
			Lower Surface				
0.020	0.062	0.020	0.144	0.020	0.198	0.020	0.291
0.110	0.013	0.060	0.119	0.060	0.183	0.060	-0.420
0.230	-0.005	0.090	0.032	0.090	0.525**	0.110	0.161
0.400	-0.112	0.120	0.032	0.120	-0.027	0.250	0.035
0.490	-0.144	0.200	0.041	0.200	-0.018	0.400	-0.007
0.630	0.841**	0.260	0.001	0.250	-0.001	0.490	-0.042
0.750	-0.029	0.400	-0.048	0.400	-0.041	0.580	-0.086
0.850	-0.008	0.490	-0.081	0.490	-0.018	0.650	-0.069
0.900	0.021	0.580	-0.174	0.580	-0.120	0.750	-0.026
0.960	0.018	0.640	0.057	0.650	-0.025	0.830	0.009
		0.750	0.107	0.750	0.093	0.900	0.058
		0.870	0.114	0.890	0.128	0.960	-0.018
		0.930	0.103	0.930	0.097		
		0.960	0.062	0.960	-1.056**		

Table H-2. Continued.

Flight 218, Wing sweep = 58°, Time = 10-23-44-500, MINF = 1.227, Camber = 0/2, ALPT = 7.86, BETA = 0.45, QINF = 622.6, RNPU = 4.0E+06

η = 0.93		0.76		0.59		0.40	
			Upper Surface				
x/c	CP	*x/c*	CP	*x/c*	CP	*x/c*	CP
0.020	-0.643	0.000	0.132	0.000	3.860**	0.010	-0.616
0.060	-0.606	0.020	-0.697	0.020	-0.654	0.020	-0.646
0.110	-0.590	0.040	-0.628	0.060	-1.953**	0.060	-0.584
0.200	-0.565	0.060	-0.635	0.090	-0.613	0.110	-0.528
0.230	-0.451	0.090	-0.598	0.110	-0.648	0.140	-0.427
0.400	-0.232	0.130	-0.590	0.130	-0.607	0.190	-0.949**
0.490	-0.187	0.150	-0.588	0.150	-0.577	0.250	-0.269
0.590	-0.146	0.200	-0.553	0.210	-0.569	0.400	-0.180
0.630	-0.113	0.250	-0.389	0.250	-0.328	0.490	-0.260
0.700	-0.113	0.260	-0.340	0.340	-0.205	0.580	-0.071
0.750	-0.192	0.280	-0.355	0.370	-0.162	0.650	-0.117
0.810	-0.197	0.290	-0.341	0.400	-0.102	0.700	-0.103
0.840	-0.183	0.310	-0.328	0.410	-1.015**	0.750	-0.132
0.900	-0.062	0.320	-0.333	0.430	-0.150	0.800	-0.135
0.960	-0.021	0.340	-0.328	0.440	-0.131	0.830	-0.193
		0.350	-0.169**	0.460	-0.144	0.900	-0.023
		0.370	-0.294	0.490	-0.115	0.960	-0.030
		0.380	-0.318	0.500	-0.155		
		0.400	-0.252	0.520	-0.153		
		0.410	-0.267	0.540	-0.149		
		0.430	-0.220	0.550	-0.121		
		0.440	-0.190	0.580	-0.127		
		0.460	-0.184	0.600	-0.156		
		0.470	-0.180	0.610	-0.156		
		0.490	-0.152	0.650	0.991**		
		0.500	-0.151	0.700	-0.190		
		0.520	-0.149	0.750	-0.245		
		0.530	-0.139	0.820	-0.307		
		0.550	-0.155	0.890	-0.325		
		0.560	-0.150	0.900	-0.244		
		0.580	-0.145	0.960	-0.124		
		0.590	-0.155				
		0.600	-0.172				
		0.640	-0.186				
		0.700	-0.215				
		0.750	-0.007**				
		0.820	-0.097				
		0.870	-0.044				
		0.930	-0.020				
		0.960	-0.010				
			Lower Surface				
0.020	0.110	0.020	0.184	0.020	0.244	0.020	0.340
0.110	0.056	0.060	0.167	0.060	0.223	0.060	-0.325
0.230	0.045	0.090	0.074	0.090	0.518**	0.110	0.189
0.400	-0.087	0.120	0.076	0.120	0.010	0.250	0.059
0.490	-0.099	0.200	0.095	0.200	0.032	0.400	0.033
0.630	0.832**	0.260	0.044	0.250	0.049	0.490	-0.001
0.750	-0.002	0.400	-0.010	0.400	-0.003	0.580	-0.053
0.850	0.010	0.490	-0.061	0.490	-0.006	0.650	-0.035
0.900	0.045	0.580	-0.147	0.580	-0.084	0.750	-0.004
0.960	0.036	0.640	0.095	0.650	-0.034	0.830	0.021
		0.750	0.142	0.750	0.119	0.900	0.072
		0.870	0.127	0.890	0.147	0.960	-0.006
		0.930	0.109	0.930	0.119		
		0.960	0.062	0.960	-1.057**		

Table H-2. Continued.

Flight 218, Wing sweep = 58°, Time = 10-23-45-000, MINF = 1.226, Camber = 0/2, ALPT = 8.42, BETA = 0.45, QINF = 622.9, RNPU = 4.0E+06

η = 0.93		0.76		0.59		0.40	
			Upper Surface				
x/c	CP	*x/c*	CP	*x/c*	CP	*x/c*	CP
0.020	-0.690	0.000	0.109	0.000	3.856**	0.010	-0.659
0.060	-0.641	0.020	-0.728	0.020	-0.686	0.020	-0.678
0.110	-0.624	0.040	-0.655	0.060	-1.954**	0.060	-0.657
0.200	-0.601	0.060	-0.677	0.090	-0.645	0.110	-0.526
0.230	-0.481	0.090	-0.631	0.110	-0.686	0.140	-0.448
0.400	-0.286	0.130	-0.618	0.130	-0.642	0.190	-0.951**
0.490	-0.249	0.150	-0.619	0.150	-0.614	0.250	-0.281
0.590	-0.220	0.200	-0.590	0.210	-0.497	0.400	-0.213
0.630	-0.188	0.250	-0.414	0.250	-0.372	0.490	-0.331
0.700	-0.156	0.260	-0.379	0.340	-0.304	0.580	-0.099
0.750	-0.186	0.280	-0.393	0.370	-0.235	0.650	-0.125
0.810	-0.182	0.290	-0.381	0.400	-0.151	0.700	-0.113
0.840	-0.174	0.310	-0.369	0.410	-1.017**	0.750	-0.141
0.900	-0.077	0.320	-0.368	0.430	-0.146	0.800	-0.148
0.960	-0.034	0.340	-0.375	0.440	-0.139	0.830	-0.191
		0.350	-0.184**	0.460	-0.153	0.900	-0.032
		0.370	-0.345	0.490	-0.117	0.960	-0.032
		0.380	-0.379	0.500	-0.165		
		0.400	-0.318	0.520	-0.162		
		0.410	-0.348	0.540	-0.162		
		0.430	-0.316	0.550	-0.140		
		0.440	-0.275	0.580	-0.148		
		0.460	-0.300	0.600	-0.171		
		0.470	-0.292	0.610	-0.169		
		0.490	-0.247	0.650	0.988**		
		0.500	-0.245	0.700	-0.221		
		0.520	-0.229	0.750	-0.272		
		0.530	-0.208	0.820	-0.357		
		0.550	-0.202	0.890	-0.352		
		0.560	-0.183	0.900	-0.254		
		0.580	-0.167	0.960	-0.118		
		0.590	-0.180				
		0.600	-0.175				
		0.640	-0.197				
		0.700	-0.222				
		0.750	-0.018**				
		0.820	-0.088				
		0.870	-0.044				
		0.930	-0.022				
		0.960	-0.014				
			Lower Surface				
0.020	0.102	0.020	0.185	0.020	0.250	0.020	0.364
0.110	0.063	0.060	0.185	0.060	0.223	0.060	-0.320
0.230	0.060	0.090	0.081	0.090	0.515**	0.110	0.176
0.400	-0.093	0.120	0.077	0.120	0.022	0.250	0.062
0.490	-0.030	0.200	0.109	0.200	0.026	0.400	0.038
0.630	0.829**	0.260	0.042	0.250	0.067	0.490	0.004
0.750	-0.024	0.400	0.001	0.400	-0.002	0.580	-0.051
0.850	0.004	0.490	-0.068	0.490	-0.019	0.650	-0.028
0.900	0.039	0.580	-0.152	0.580	-0.087	0.750	-0.008
0.960	0.028	0.640	0.096	0.650	-0.026	0.830	0.019
		0.750	0.142	0.750	0.113	0.900	0.065
		0.870	0.120	0.890	0.144	0.960	-0.015
		0.930	0.087	0.930	0.117		
		0.960	0.047	0.960	-1.059**		

Table H-2. Continued.

Flight 218, Wing sweep = 58°, Time = 10-23-46-000, MINF = 1.222, Camber = 0/2, ALPT = 9.47, BETA = 0.45, QINF = 621.6, RNPU = 4.0E+06

η = 0.93		0.76		0.59		0.40	
			Upper Surface				
x/c	CP	*x/c*	CP	*x/c*	CP	*x/c*	CP
0.020	-0.740	0.000	0.065	0.000	3.861**	0.010	-0.704
0.060	-0.680	0.020	-0.767	0.020	-0.724	0.020	-0.725
0.110	-0.708	0.040	-0.697	0.060	-1.962**	0.060	-0.689
0.200	-0.491	0.060	-0.719	0.090	-0.682	0.110	-0.576
0.230	-0.406	0.090	-0.676	0.110	-0.723	0.140	-0.489
0.400	-0.357	0.130	-0.665	0.130	-0.686	0.190	-0.957**
0.490	-0.334	0.150	-0.660	0.150	-0.561	0.250	-0.360
0.590	-0.318	0.200	-0.555	0.210	-0.495	0.400	-0.251
0.630	-0.273	0.250	-0.456	0.250	-0.432	0.490	-0.333
0.700	-0.234	0.260	-0.423	0.340	-0.438	0.580	-0.175
0.750	-0.205	0.280	-0.450	0.370	-0.404	0.650	-0.148
0.810	-0.199	0.290	-0.438	0.400	-0.268	0.700	-0.135
0.840	-0.197	0.310	-0.424	0.410	-1.023**	0.750	-0.148
0.900	-0.111	0.320	-0.429	0.430	-0.127	0.800	-0.155
0.960	-0.065	0.340	-0.433	0.440	-0.117	0.830	-0.201
		0.350	-0.215**	0.460	-0.139	0.900	-0.050
		0.370	-0.404	0.490	-0.127	0.960	-0.041
		0.380	-0.445	0.500	-0.172		
		0.400	-0.360	0.520	-0.183		
		0.410	-0.426	0.540	-0.179		
		0.430	-0.410	0.550	-0.160		
		0.440	-0.373	0.580	-0.162		
		0.460	-0.397	0.600	-0.194		
		0.470	-0.397	0.610	-0.199		
		0.490	-0.368	0.650	0.986**		
		0.500	-0.374	0.700	-0.254		
		0.520	-0.375	0.750	-0.307		
		0.530	-0.349	0.820	-0.409		
		0.550	-0.344	0.890	-0.354		
		0.560	-0.328	0.900	-0.273		
		0.580	-0.306	0.960	-0.135		
		0.590	-0.300				
		0.600	-0.259				
		0.640	-0.166				
		0.700	-0.201				
		0.750	-0.028**				
		0.820	-0.071				
		0.870	-0.037				
		0.930	-0.024				
		0.960	-0.010				
			Lower Surface				
0.020	0.142	0.020	0.202	0.020	0.259	0.020	0.379
0.110	0.091	0.060	0.203	0.060	0.226	0.060	-0.338
0.230	0.063	0.090	0.124	0.090	0.513**	0.110	0.186
0.400	-0.078	0.120	0.129	0.120	0.074	0.250	0.080
0.490	0.025	0.200	0.122	0.200	0.037	0.400	0.049
0.630	0.828**	0.260	0.056	0.250	0.092	0.490	0.026
0.750	-0.019	0.400	0.009	0.400	0.013	0.580	-0.031
0.850	0.009	0.490	-0.066	0.490	-0.026	0.650	-0.016
0.900	0.038	0.580	-0.141	0.580	-0.071	0.750	0.014
0.960	0.036	0.640	0.109	0.650	-0.040	0.830	0.019
		0.750	0.148	0.750	0.121	0.900	0.072
		0.870	0.104	0.890	0.152	0.960	-0.020
		0.930	0.079	0.930	0.118		
		0.960	0.032	0.960	-1.065**		

Table H-2. Continued.

Flight 218, Wing sweep = 58°, Time = 10-23-47-000, MINF = 1.216, Camber = 0/2, ALPT = 10.51, BETA = 0.48, QINF = 615.9, RNPU = 4.0E+06

η = 0.93		0.76		0.59		0.40	
			Upper Surface				
x/c	CP	*x/c*	CP	*x/c*	CP	*x/c*	CP
0.020	-0.786	0.000	0.022	0.000	3.895**	0.010	-0.736
0.060	-0.740	0.020	-0.828	0.020	-0.759	0.020	-0.735
0.110	-0.583	0.040	-0.742	0.060	-1.981**	0.060	-0.734
0.200	-0.528	0.060	-0.764	0.090	-0.722	0.110	-0.586
0.230	-0.487	0.090	-0.719	0.110	-0.768	0.140	-0.567
0.400	-0.418	0.130	-0.627	0.130	-0.593	0.190	-0.967**
0.490	-0.386	0.150	-0.550	0.150	-0.546	0.250	-0.399
0.590	-0.381	0.200	-0.544	0.210	-0.548	0.400	-0.279
0.630	-0.338	0.250	-0.524	0.250	-0.490	0.490	-0.445
0.700	-0.287	0.260	-0.485	0.340	-0.517	0.580	-0.249
0.750	-0.252	0.280	-0.505	0.370	-0.515	0.650	-0.184
0.810	-0.255	0.290	-0.497	0.400	-0.379	0.700	-0.161
0.840	-0.253	0.310	-0.478	0.410	-1.033**	0.750	-0.155
0.900	-0.175	0.320	-0.482	0.430	-0.158	0.800	-0.158
0.960	-0.094	0.340	-0.492	0.440	-0.144	0.830	-0.194
		0.350	-0.239**	0.460	-0.165	0.900	-0.045
		0.370	-0.466	0.490	-0.177	0.960	-0.050
		0.380	-0.509	0.500	-0.197		
		0.400	-0.458	0.520	-0.210		
		0.410	-0.487	0.540	-0.202		
		0.430	-0.488	0.550	-0.184		
		0.440	-0.440	0.580	-0.189		
		0.460	-0.482	0.600	-0.222		
		0.470	-0.475	0.610	-0.229		
		0.490	-0.453	0.650	0.994**		
		0.500	-0.444	0.700	-0.292		
		0.520	-0.462	0.750	-0.344		
		0.530	-0.450	0.820	-0.437		
		0.550	-0.458	0.890	-0.304		
		0.560	-0.448	0.900	-0.291		
		0.580	-0.441	0.960	-0.186		
		0.590	-0.432				
		0.600	-0.409				
		0.640	-0.181				
		0.700	-0.209				
		0.750	-0.035**				
		0.820	-0.093				
		0.870	-0.033				
		0.930	-0.041				
		0.960	-0.026				
			Lower Surface				
0.020	0.159	0.020	0.255	0.020	0.321	0.020	0.387
0.110	0.103	0.060	0.225	0.060	0.291	0.060	-0.335
0.230	0.073	0.090	0.131	0.090	0.516**	0.110	0.159
0.400	-0.020	0.120	0.149	0.120	0.083	0.250	0.095
0.490	0.056	0.200	0.152	0.200	0.080	0.400	0.070
0.630	0.834**	0.260	0.083	0.250	0.117	0.490	0.060
0.750	-0.015	0.400	0.011	0.400	0.032	0.580	-0.010
0.850	0.001	0.490	-0.067	0.490	-0.024	0.650	0.006
0.900	0.039	0.580	-0.020	0.580	-0.063	0.750	0.021
0.960	0.036	0.640	0.127	0.650	-0.041	0.830	0.031
		0.750	0.145	0.750	0.139	0.900	0.082
		0.870	0.114	0.890	0.156	0.960	-0.017
		0.930	0.075	0.930	0.125		
		0.960	0.029	0.960	-1.076**		

Table H-2. Continued.

Flight 218, Wing sweep = 58°, Time = 10-23-48-000, MINF = 1.206, Camber = 0/2, ALPT = 11.26, BETA = 0.51, QINF = 606.1, RNPU = 4.0E+06

η = 0.93		0.76		0.59		0.40	
			Upper Surface				
x/c	CP	*x/c*	CP	*x/c*	CP	*x/c*	CP
0.020	-0.776	0.000	-0.024	0.000	3.958**	0.010	-0.772
0.060	-0.623	0.020	-0.791	0.020	-0.784	0.020	-0.806
0.110	-0.663	0.040	-0.670	0.060	-2.013**	0.060	-0.768
0.200	-0.533	0.060	-0.635	0.090	-0.627	0.110	-0.634
0.230	-0.491	0.090	-0.591	0.110	-0.654	0.140	-0.617
0.400	-0.477	0.130	-0.589	0.130	-0.611	0.190	-0.983**
0.490	-0.425	0.150	-0.588	0.150	-0.601	0.250	-0.395
0.590	-0.424	0.200	-0.582	0.210	-0.599	0.400	-0.331
0.630	-0.382	0.250	-0.592	0.250	-0.519	0.490	-0.512
0.700	-0.366	0.260	-0.552	0.340	-0.551	0.580	-0.288
0.750	-0.329	0.280	-0.579	0.370	-0.536	0.650	-0.199
0.810	-0.312	0.290	-0.566	0.400	-0.437	0.700	-0.171
0.840	-0.323	0.310	-0.548	0.410	-1.050**	0.750	-0.150
0.900	-0.215	0.320	-0.552	0.430	-0.273	0.800	-0.161
0.960	-0.127	0.340	-0.557	0.440	-0.235	0.830	-0.189
		0.350	-0.249**	0.460	-0.231	0.900	-0.052
		0.370	-0.519	0.490	-0.191	0.960	-0.049
		0.380	-0.567	0.500	-0.229		
		0.400	-0.505	0.520	-0.227		
		0.410	-0.539	0.540	-0.229		
		0.430	-0.529	0.550	-0.204		
		0.440	-0.493	0.580	-0.220		
		0.460	-0.530	0.600	-0.248		
		0.470	-0.524	0.610	-0.252		
		0.490	-0.496	0.650	1.010**		
		0.500	-0.515	0.700	-0.327		
		0.520	-0.504	0.750	-0.371		
		0.530	-0.497	0.820	-0.482		
		0.550	-0.511	0.890	-0.298		
		0.560	-0.501	0.900	-0.298		
		0.580	-0.484	0.960	-0.204		
		0.590	-0.484				
		0.600	-0.470				
		0.640	-0.272				
		0.700	-0.220				
		0.750	-0.027**				
		0.820	-0.099				
		0.870	-0.030				
		0.930	-0.046				
		0.960	-0.046				
			Lower Surface				
0.020	0.167	0.020	0.277	0.020	0.353	0.020	0.376
0.110	0.118	0.060	0.245	0.060	0.319	0.060	-0.330
0.230	0.093	0.090	0.160	0.090	0.524**	0.110	0.285
0.400	0.026	0.120	0.184	0.120	0.130	0.250	0.120
0.490	0.079	0.200	0.190	0.200	0.109	0.400	0.103
0.630	0.848**	0.260	0.110	0.250	0.158	0.490	0.088
0.750	-0.006	0.400	0.019	0.400	0.056	0.580	0.021
0.850	0.004	0.490	-0.044	0.490	-0.017	0.650	0.032
0.900	0.043	0.580	0.052	0.580	-0.060	0.750	0.047
0.960	0.027	0.640	0.153	0.650	-0.035	0.830	0.056
		0.750	0.163	0.750	0.163	0.900	0.108
		0.870	0.124	0.890	0.169	0.960	-0.002
		0.930	0.091	0.930	0.161		
		0.960	0.044	0.960	-1.093**		

Table H-2. Continued.

Flight 218, Wing sweep = 58°, Time = 10-26-14-000, MINF = 1.214, Camber = 2/1, ALPT = 5.12, BETA = 0.37, QINF = 599.3, RNPU = 3.9E+06

η = 0.93		0.76		0.59		0.40	
			Upper Surface				
x/c	CP	*x/c*	CP	*x/c*	CP	*x/c*	CP
0.020	-0.426	0.000	0.244	0.000	4.027**	0.010	-0.449
0.060	-0.358	0.020	-0.465	0.020	-0.468	0.020	-0.484
0.110	-0.379	0.040	-0.408	0.060	-1.555**	0.060	-0.426
0.200	-0.198	0.060	-0.455	0.090	-0.430	0.110	-0.393
0.230	-0.095	0.090	-0.410	0.110	-0.460	0.140	-0.309
0.400	-0.081	0.130	-0.431	0.130	-0.431	0.190	-0.969**
0.490	-0.075	0.150	-0.442	0.150	-0.443	0.250	-0.192
0.590	-0.110	0.200	-0.423	0.210	-0.333	0.400	-0.096
0.630	-0.116	0.250	-0.160	0.250	-0.137	0.490	-0.088
0.700	-0.114	0.260	-0.128	0.340	-0.096	0.580	-0.055
0.750	-0.200	0.280	-0.137	0.370	-0.116	0.650	-0.104
0.810	-0.183	0.290	-0.113	0.400	-0.085	0.700	-0.089
0.840	-0.183	0.310	-0.122	0.410	-1.467**	0.750	-0.101
0.900	-0.080	0.320	-0.122	0.430	-0.112	0.800	-0.127
0.960	-0.037	0.340	-0.116	0.440	-0.097	0.830	-0.166
		0.350	-0.061**	0.460	-0.109	0.900	-0.016
		0.370	-0.094	0.490	-0.022	0.960	-0.024
		0.380	-0.124	0.500	-0.106		
		0.400	-0.067	0.520	-0.096		
		0.410	-0.120	0.540	-0.108		
		0.430	-0.102	0.550	-0.084		
		0.440	-0.072	0.580	-0.082		
		0.460	-0.113	0.600	-0.099		
		0.470	-0.102	0.610	-0.098		
		0.490	-0.112	0.650	3.342**		
		0.500	-0.094	0.700	-0.165		
		0.520	-0.124	0.750	-0.194		
		0.530	-0.118	0.820	-0.233		
		0.550	-0.135	0.890	-0.254		
		0.560	-0.142	0.900	-0.153		
		0.580	-0.124	0.960	-0.053		
		0.590	-0.142				
		0.600	-0.159				
		0.640	-0.175				
		0.700	-0.190				
		0.750	-0.010**				
		0.820	-0.122				
		0.870	-0.111				
		0.930	-0.014				
		0.960	0.013				
			Lower Surface				
0.020	-0.010	0.020	0.044	0.020	0.110	0.020	0.211
0.110	-0.042	0.060	0.055	0.060	0.149	0.060	-0.485
0.230	-0.083	0.090	-0.028	0.090	1.806**	0.110	-0.013
0.400	-0.123	0.120	-0.009	0.120	-0.082	0.250	0.028
0.490	-0.144	0.200	-0.018	0.200	-0.041	0.400	-0.024
0.630	1.388**	0.260	-0.034	0.250	-0.031	0.490	-0.065
0.750	-0.045	0.400	-0.084	0.400	-0.079	0.580	-0.122
0.850	-0.028	0.490	-0.123	0.490	-0.021	0.650	-0.103
0.900	0.009	0.580	-0.184	0.580	-0.149	0.750	-0.088
0.960	0.012	0.640	0.009	0.650	-0.016	0.830	0.008
		0.750	0.089	0.750	0.060	0.900	0.097
		0.870	0.121	0.890	0.102	0.960	-0.023
		0.930	0.094	0.930	0.075		
		0.960	0.071	0.960	-1.510**		

Table H-2. Continued.

Flight 218, Wing sweep = 58°, Time = 10-26-26-000, MINF = 1.215, Camber = 2/1, ALPT = 5.12, BETA = 0.37, QINF = 604.3, RNPU = 3.9E+06

η = 0.93		0.76		0.59		0.40	
			Upper Surface				
x/c	CP	*x/c*	CP	*x/c*	CP	*x/c*	CP
0.020	-0.434	0.000	0.243	0.000	3.987**	0.010	-0.456
0.060	-0.408	0.020	-0.491	0.020	-0.465	0.020	-0.487
0.110	-0.387	0.040	-0.416	0.060	-1.960**	0.060	-0.397
0.200	-0.219	0.060	-0.462	0.090	-0.432	0.110	-0.401
0.230	-0.101	0.090	-0.422	0.110	-0.472	0.140	-0.298
0.400	-0.081	0.130	-0.437	0.130	-0.434	0.190	-0.968**
0.490	-0.086	0.150	-0.448	0.150	-0.461	0.250	-0.184
0.590	-0.116	0.200	-0.423	0.210	-0.335	0.400	-0.096
0.630	-0.126	0.250	-0.179	0.250	-0.140	0.490	-0.083
0.700	-0.120	0.260	-0.120	0.340	-0.096	0.580	-0.066
0.750	-0.194	0.280	-0.140	0.370	-0.112	0.650	-0.098
0.810	-0.179	0.290	-0.124	0.400	-0.121	0.700	-0.085
0.840	-0.194	0.310	-0.116	0.410	-1.462**	0.750	-0.108
0.900	-0.094	0.320	-0.109	0.430	-0.108	0.800	-0.130
0.960	-0.044	0.340	-0.116	0.440	-0.102	0.830	-0.165
		0.350	-0.071**	0.460	-0.101	0.900	-0.017
		0.370	-0.104	0.490	-0.078	0.960	-0.028
		0.380	-0.115	0.500	-0.121		
		0.400	-0.077	0.520	-0.111		
		0.410	-0.125	0.540	-0.108		
		0.430	-0.102	0.550	-0.090		
		0.440	-0.089	0.580	-0.087		
		0.460	-0.105	0.600	-0.112		
		0.470	-0.096	0.610	-0.115		
		0.490	-0.109	0.650	3.307**		
		0.500	-0.120	0.700	-0.166		
		0.520	-0.127	0.750	-0.203		
		0.530	-0.123	0.820	-0.228		
		0.550	-0.145	0.890	-0.251		
		0.560	-0.133	0.900	-0.159		
		0.580	-0.123	0.960	-0.065		
		0.590	-0.167				
		0.600	-0.163				
		0.640	-0.177				
		0.700	-0.191				
		0.750	-0.021**				
		0.820	-0.125				
		0.870	-0.109				
		0.930	-0.014				
		0.960	0.009				
			Lower Surface				
0.020	-0.021	0.020	0.060	0.020	0.112	0.020	0.201
0.110	-0.028	0.060	0.060	0.060	0.130	0.060	-0.488
0.230	-0.079	0.090	-0.031	0.090	1.784**	0.110	-0.024
0.400	-0.129	0.120	-0.013	0.120	-0.074	0.250	0.017
0.490	-0.161	0.200	-0.016	0.200	-0.035	0.400	-0.035
0.630	1.369**	0.260	-0.037	0.250	-0.031	0.490	-0.076
0.750	-0.052	0.400	-0.084	0.400	-0.079	0.580	-0.125
0.850	-0.026	0.490	-0.115	0.490	-0.014	0.650	-0.099
0.900	0.012	0.580	-0.185	0.580	-0.144	0.750	-0.078
0.960	0.015	0.640	0.002	0.650	-0.018	0.830	-0.003
		0.750	0.078	0.750	0.052	0.900	0.095
		0.870	0.086	0.890	0.092	0.960	-0.009
		0.930	0.081	0.930	0.078		
		0.960	0.059	0.960	-1.505**		

Table H-2. Continued.

Flight 218, Wing sweep = 58°, Time = 10-26-29-500, MINF = 1.217, Camber = 1/2, ALPT = 3.55, BETA = 0.37, QINF = 607.7, RNPU = 4.0E+06

η = 0.93		0.76		0.59		0.40	
			Upper Surface				
x/c	CP	*x/c*	CP	*x/c*	CP	*x/c*	CP
0.020	-0.249	0.000	0.289	0.000	3.963**	0.010	-0.376
0.060	-0.262	0.020	-0.371	0.020	-0.382	0.020	-0.439
0.110	-0.061	0.040	-0.309	0.060	-1.951**	0.060	-0.353
0.200	-0.103	0.060	-0.363	0.090	-0.353	0.110	-0.258
0.230	-0.059	0.090	-0.215	0.110	-0.281	0.140	-0.254
0.400	-0.075	0.130	-0.233	0.130	-0.275	0.190	-0.965**
0.490	-0.085	0.150	-0.211	0.150	-0.261	0.250	-0.154
0.590	-0.122	0.200	-0.127	0.210	-0.215	0.400	-0.059
0.630	-0.144	0.250	-0.095	0.250	-0.073	0.490	-0.036
0.700	-0.145	0.260	-0.078	0.340	-0.067	0.580	-0.034
0.750	-0.222	0.280	-0.083	0.370	-0.082	0.650	-0.069
0.810	-0.215	0.290	-0.098	0.400	-0.064	0.700	-0.073
0.840	-0.219	0.310	-0.080	0.410	-1.456**	0.750	-0.095
0.900	-0.106	0.320	-0.081	0.430	-0.072	0.800	-0.118
0.960	-0.042	0.340	-0.090	0.440	-0.071	0.830	-0.151
		0.350	-0.066**	0.460	-0.077	0.900	-0.018
		0.370	-0.067	0.490	-0.042	0.960	-0.029
		0.380	-0.084	0.500	-0.085		
		0.400	-0.045	0.520	-0.076		
		0.410	-0.080	0.540	-0.079		
		0.430	-0.068	0.550	-0.042		
		0.440	-0.035	0.580	-0.045		
		0.460	-0.068	0.600	-0.067		
		0.470	-0.078	0.610	-0.076		
		0.490	-0.067	0.650	3.287**		
		0.500	-0.071	0.700	-0.142		
		0.520	-0.087	0.750	-0.168		
		0.530	-0.084	0.820	-0.203		
		0.550	-0.118	0.890	-0.239		
		0.560	-0.111	0.900	-0.154		
		0.580	-0.102	0.960	-0.043		
		0.590	-0.126				
		0.600	-0.121				
		0.640	-0.140				
		0.700	-0.168				
		0.750	-0.015**				
		0.820	-0.115				
		0.870	-0.148				
		0.930	-0.003				
		0.960	0.030				
			Lower Surface				
0.020	-0.089	0.020	-0.016	0.020	0.070	0.020	0.162
0.110	-0.100	0.060	0.024	0.060	0.096	0.060	-0.504
0.230	-0.120	0.090	-0.085	0.090	1.772**	0.110	-0.049
0.400	-0.158	0.120	-0.069	0.120	-0.115	0.250	-0.004
0.490	-0.163	0.200	-0.052	0.200	-0.056	0.400	-0.066
0.630	1.359**	0.260	-0.089	0.250	-0.080	0.490	-0.110
0.750	-0.003	0.400	-0.115	0.400	-0.114	0.580	-0.161
0.850	0.026	0.490	-0.154	0.490	-0.030	0.650	-0.126
0.900	0.063	0.580	-0.198	0.580	-0.178	0.750	-0.139
0.960	0.053	0.640	-0.030	0.650	-0.030	0.830	-0.012
		0.750	0.068	0.750	0.039	0.900	0.067
		0.870	0.100	0.890	0.101	0.960	-0.025
		0.930	0.098	0.930	0.077		
		0.960	0.079	0.960	-1.499**		

Table H-2. Continued.

Flight 218, Wing sweep = 58°, Time = 10-26-32-500, MINF = 1.222, Camber = 0/3, ALPT = 2.56, BETA = 0.43, QINF = 615.5, RNPU = 4.0E+06

η = 0.93		0.76		0.59		0.40	
			Upper Surface				
x/c	CP	*x/c*	CP	*x/c*	CP	*x/c*	CP
0.020	0.027	0.000	0.317	0.000	3.908**	0.010	-0.352
0.060	-0.016	0.020	-0.320	0.020	-0.213	0.020	-0.282
0.110	-0.001	0.040	-0.172	0.060	-1.931**	0.060	-0.269
0.200	-0.055	0.060	-0.179	0.090	-0.167	0.110	-0.208
0.230	-0.017	0.090	-0.128	0.110	-0.186	0.140	-0.209
0.400	-0.062	0.130	-0.101	0.130	-0.172	0.190	-0.957**
0.490	-0.108	0.150	-0.063	0.150	-0.172	0.250	-0.133
0.590	-0.114	0.200	-0.064	0.210	-0.149	0.400	-0.018
0.630	-0.126	0.250	-0.058	0.250	-0.013	0.490	0.000
0.700	-0.144	0.260	-0.045	0.340	-0.031	0.580	0.000
0.750	-0.262	0.280	-0.061	0.370	-0.035	0.650	-0.057
0.810	-0.259	0.290	-0.066	0.400	-0.025	0.700	-0.052
0.840	-0.255	0.310	-0.056	0.410	-1.442**	0.750	-0.074
0.900	-0.109	0.320	-0.049	0.430	-0.044	0.800	-0.094
0.960	-0.043	0.340	-0.057	0.440	-0.040	0.830	-0.114
		0.350	-0.071**	0.460	-0.037	0.900	-0.008
		0.370	-0.033	0.490	0.000	0.960	-0.024
		0.380	-0.052	0.500	-0.050		
		0.400	-0.009	0.520	-0.041		
		0.410	-0.049	0.540	-0.049		
		0.430	-0.030	0.550	-0.029		
		0.440	-0.011	0.580	-0.025		
		0.460	-0.055	0.600	-0.040		
		0.470	-0.043	0.610	-0.040		
		0.490	-0.047	0.650	3.240**		
		0.500	-0.043	0.700	-0.108		
		0.520	-0.062	0.750	-0.145		
		0.530	-0.056	0.820	-0.198		
		0.550	-0.093	0.890	-0.201		
		0.560	-0.076	0.900	-0.127		
		0.580	-0.066	0.960	-0.016		
		0.590	-0.094				
		0.600	-0.096				
		0.640	-0.126				
		0.700	-0.154				
		0.750	-0.020**				
		0.820	-0.118				
		0.870	-0.173				
		0.930	0.005				
		0.960	0.033				
			Lower Surface				
0.020	-0.098	0.020	-0.038	0.020	0.014	0.020	0.147
0.110	-0.137	0.060	-0.002	0.060	0.090	0.060	-0.526
0.230	-0.136	0.090	-0.112	0.090	1.745**	0.110	-0.049
0.400	-0.173	0.120	-0.101	0.120	-0.121	0.250	-0.011
0.490	-0.177	0.200	-0.055	0.200	-0.066	0.400	-0.084
0.630	1.337**	0.260	-0.111	0.250	-0.088	0.490	-0.111
0.750	0.044	0.400	-0.131	0.400	-0.132	0.580	-0.178
0.850	0.078	0.490	-0.186	0.490	-0.021	0.650	-0.127
0.900	0.105	0.580	-0.231	0.580	-0.209	0.750	-0.150
0.960	0.073	0.640	0.003	0.650	-0.017	0.830	-0.011
		0.750	0.094	0.750	0.047	0.900	0.056
		0.870	0.112	0.890	0.116	0.960	-0.008
		0.930	0.118	0.930	0.087		
		0.960	0.095	0.960	-1.485**		

Table H-2. Continued.

Flight 218, Wing sweep = 58°, Time = 10-26-36-500, MINF = 1.235, Camber = 1/3, ALPT = 3.80, BETA = 0.31, QINF = 641.9, RNPU = 4.2E+06

η = 0.93		0.76		0.59		0.40	
			Upper Surface				
x/c	CP	*x/c*	CP	*x/c*	CP	*x/c*	CP
0.020	-0.380	0.000	0.268	0.000	3.728**	0.010	-0.376
0.060	-0.359	0.020	-0.450	0.020	-0.402	0.020	-0.441
0.110	-0.165	0.040	-0.377	0.060	-1.870**	0.060	-0.374
0.200	-0.080	0.060	-0.419	0.090	-0.330	0.110	-0.282
0.230	-0.035	0.090	-0.347	0.110	-0.361	0.140	-0.244
0.400	-0.060	0.130	-0.316	0.130	-0.276	0.190	-0.937**
0.490	-0.070	0.150	-0.246	0.150	-0.251	0.250	-0.156
0.590	-0.095	0.200	-0.184	0.210	-0.253	0.400	-0.079
0.630	-0.129	0.250	-0.100	0.250	-0.103	0.490	-0.041
0.700	-0.136	0.260	-0.074	0.340	-0.063	0.580	-0.033
0.750	-0.248	0.280	-0.093	0.370	-0.078	0.650	-0.079
0.810	-0.244	0.290	-0.089	0.400	-0.064	0.700	-0.063
0.840	-0.242	0.310	-0.083	0.410	-1.402**	0.750	-0.090
0.900	-0.138	0.320	-0.089	0.430	-0.075	0.800	-0.095
0.960	-0.060	0.340	-0.082	0.440	-0.063	0.830	-0.152
		0.350	-0.072**	0.460	-0.074	0.900	-0.034
		0.370	-0.072	0.490	-0.064	0.960	-0.012
		0.380	-0.089	0.500	-0.077		
		0.400	-0.012	0.520	-0.066		
		0.410	-0.085	0.540	-0.075		
		0.430	-0.060	0.550	-0.050		
		0.440	-0.044	0.580	-0.043		
		0.460	-0.071	0.600	-0.074		
		0.470	-0.084	0.610	-0.073		
		0.490	-0.073	0.650	3.088**		
		0.500	-0.080	0.700	-0.139		
		0.520	-0.085	0.750	-0.176		
		0.530	-0.086	0.820	-0.217		
		0.550	-0.112	0.890	-0.227		
		0.560	-0.097	0.900	-0.153		
		0.580	-0.094	0.960	-0.046		
		0.590	-0.117				
		0.600	-0.121				
		0.640	-0.144				
		0.700	-0.166				
		0.750	-0.023**				
		0.820	-0.133				
		0.870	-0.185				
		0.930	-0.024				
		0.960	0.012				
			Lower Surface				
0.020	-0.062	0.020	0.020	0.020	0.089	0.020	0.181
0.110	-0.091	0.060	0.018	0.060	0.083	0.060	-0.476
0.230	-0.112	0.090	-0.077	0.090	1.654**	0.110	0.000
0.400	-0.178	0.120	-0.050	0.120	-0.101	0.250	0.000
0.490	-0.166	0.200	-0.050	0.200	-0.041	0.400	-0.059
0.630	1.264**	0.260	-0.081	0.250	-0.072	0.490	-0.101
0.750	-0.027	0.400	-0.109	0.400	-0.113	0.580	-0.148
0.850	0.022	0.490	-0.161	0.490	-0.029	0.650	-0.120
0.900	0.056	0.580	-0.202	0.580	-0.175	0.750	-0.123
0.960	0.040	0.640	0.000	0.650	-0.035	0.830	-0.020
		0.750	0.091	0.750	0.051	0.900	0.073
		0.870	0.105	0.890	0.123	0.960	-0.024
		0.930	0.096	0.930	0.092		
		0.960	0.076	0.960	-1.442**		

Table H-2. Continued.

Flight 218, Wing sweep = 58°, Time = 10-26-37-000, MINF = 1.237, Camber = 1/3, ALPT = 4.71, BETA = 0.37, QINF = 646.5, RNPU = 4.2E+06

η = 0.93		0.76		0.59		0.40	
			Upper Surface				
x/c	CP	*x/c*	CP	*x/c*	CP	*x/c*	CP
0.020	-0.422	0.000	0.260	0.000	3.699**	0.010	-0.441
0.060	-0.378	0.020	-0.486	0.020	-0.437	0.020	-0.460
0.110	-0.377	0.040	-0.404	0.060	-1.860**	0.060	-0.397
0.200	-0.179	0.060	-0.445	0.090	-0.415	0.110	-0.353
0.230	-0.073	0.090	-0.411	0.110	-0.433	0.140	-0.278
0.400	-0.063	0.130	-0.410	0.130	-0.381	0.190	-0.933**
0.490	-0.053	0.150	-0.405	0.150	-0.348	0.250	-0.200
0.590	-0.086	0.200	-0.366	0.210	-0.311	0.400	-0.104
0.630	-0.097	0.250	-0.139	0.250	-0.143	0.490	-0.070
0.700	-0.106	0.260	-0.108	0.340	-0.084	0.580	-0.058
0.750	-0.211	0.280	-0.111	0.370	-0.093	0.650	-0.092
0.810	-0.209	0.290	-0.103	0.400	-0.074	0.700	-0.083
0.840	-0.213	0.310	-0.091	0.410	-1.395**	0.750	-0.086
0.900	-0.134	0.320	-0.108	0.430	-0.095	0.800	-0.104
0.960	-0.041	0.340	-0.089	0.440	-0.081	0.830	-0.159
		0.350	-0.063**	0.460	-0.080	0.900	-0.015
		0.370	-0.077	0.490	-0.043	0.960	-0.024
		0.380	-0.094	0.500	-0.079		
		0.400	-0.054	0.520	-0.084		
		0.410	-0.087	0.540	-0.087		
		0.430	-0.084	0.550	-0.066		
		0.440	-0.078	0.580	-0.057		
		0.460	-0.077	0.600	-0.082		
		0.470	-0.082	0.610	-0.100		
		0.490	-0.079	0.650	3.063**		
		0.500	-0.076	0.700	-0.143		
		0.520	-0.096	0.750	-0.177		
		0.530	-0.088	0.820	-0.232		
		0.550	-0.119	0.890	-0.228		
		0.560	-0.112	0.900	-0.146		
		0.580	-0.112	0.960	-0.054		
		0.590	-0.136				
		0.600	-0.128				
		0.640	-0.149				
		0.700	-0.165				
		0.750	-0.011**				
		0.820	-0.121				
		0.870	-0.166				
		0.930	-0.020				
		0.960	0.023				
			Lower Surface				
0.020	-0.002	0.020	0.079	0.020	0.138	0.020	0.226
0.110	-0.040	0.060	0.054	0.060	0.129	0.060	-0.438
0.230	-0.078	0.090	-0.015	0.090	1.640**	0.110	-0.005
0.400	-0.118	0.120	-0.024	0.120	-0.065	0.250	0.027
0.490	-0.136	0.200	-0.009	0.200	-0.009	0.400	-0.025
0.630	1.252**	0.260	-0.057	0.250	-0.035	0.490	-0.064
0.750	-0.014	0.400	-0.074	0.400	-0.071	0.580	-0.128
0.850	0.010	0.490	-0.118	0.490	-0.012	0.650	-0.088
0.900	0.030	0.580	-0.167	0.580	-0.160	0.750	-0.087
0.960	0.015	0.640	0.027	0.650	-0.035	0.830	0.002
		0.750	0.090	0.750	0.079	0.900	0.066
		0.870	0.110	0.890	0.139	0.960	-0.023
		0.930	0.099	0.930	0.105		
		0.960	0.076	0.960	-1.435**		

Table H-2. Continued.

Flight 218, Wing sweep = 58°, Time = 10-26-37-500, MINF = 1.238, Camber = 1/2, ALPT = 5.82, BETA = 0.37, QINF = 649.7, RNPU = 4.2E+06

η = 0.93		0.76		0.59		0.40	
			Upper Surface				
x/c	CP	*x/c*	CP	*x/c*	CP	*x/c*	CP
0.020	-0.465	0.000	0.241	0.000	3.677**	0.010	-0.471
0.060	-0.443	0.020	-0.533	0.020	-0.484	0.020	-0.500
0.110	-0.429	0.040	-0.444	0.060	-1.854**	0.060	-0.440
0.200	-0.455	0.060	-0.483	0.090	-0.463	0.110	-0.430
0.230	-0.394	0.090	-0.449	0.110	-0.502	0.140	-0.327
0.400	-0.068	0.130	-0.462	0.130	-0.469	0.190	-0.932**
0.490	-0.055	0.150	-0.466	0.150	-0.449	0.250	-0.222
0.590	-0.087	0.200	-0.440	0.210	-0.439	0.400	-0.121
0.630	-0.087	0.250	-0.305	0.250	-0.207	0.490	-0.119
0.700	-0.097	0.260	-0.234	0.340	-0.116	0.580	-0.055
0.750	-0.184	0.280	-0.216	0.370	-0.122	0.650	-0.090
0.810	-0.178	0.290	-0.184	0.400	-0.094	0.700	-0.080
0.840	-0.182	0.310	-0.157	0.410	-1.391**	0.750	-0.103
0.900	-0.088	0.320	-0.157	0.430	-0.103	0.800	-0.100
0.960	-0.033	0.340	-0.134	0.440	-0.094	0.830	-0.163
		0.350	-0.072**	0.460	-0.103	0.900	-0.021
		0.370	-0.102	0.490	-0.072	0.960	-0.028
		0.380	-0.119	0.500	-0.106		
		0.400	-0.081	0.520	-0.096		
		0.410	-0.108	0.540	-0.099		
		0.430	-0.089	0.550	-0.079		
		0.440	-0.073	0.580	-0.078		
		0.460	-0.096	0.600	-0.107		
		0.470	-0.103	0.610	-0.115		
		0.490	-0.093	0.650	3.044**		
		0.500	-0.101	0.700	-0.155		
		0.520	-0.107	0.750	-0.199		
		0.530	-0.107	0.820	-0.230		
		0.550	-0.136	0.890	-0.281		
		0.560	-0.131	0.900	-0.182		
		0.580	-0.123	0.960	-0.079		
		0.590	-0.144				
		0.600	-0.145				
		0.640	-0.167				
		0.700	-0.182				
		0.750	-0.003**				
		0.820	-0.114				
		0.870	-0.117				
		0.930	-0.004				
		0.960	0.006				
			Lower Surface				
0.020	0.005	0.020	0.119	0.020	0.158	0.020	0.254
0.110	-0.005	0.060	0.100	0.060	0.175	0.060	-0.426
0.230	-0.052	0.090	0.002	0.090	1.628**	0.110	-0.002
0.400	-0.089	0.120	0.019	0.120	-0.034	0.250	0.045
0.490	-0.120	0.200	0.018	0.200	0.002	0.400	-0.007
0.630	1.242**	0.260	-0.001	0.250	0.004	0.490	-0.046
0.750	-0.004	0.400	-0.051	0.400	-0.041	0.580	-0.095
0.850	0.003	0.490	-0.092	0.490	-0.006	0.650	-0.074
0.900	0.037	0.580	-0.171	0.580	-0.120	0.750	-0.043
0.960	0.033	0.640	0.035	0.650	-0.012	0.830	0.012
		0.750	0.106	0.750	0.084	0.900	0.065
		0.870	0.142	0.890	0.133	0.960	-0.017
		0.930	0.111	0.930	0.104		
		0.960	0.085	0.960	-1.432**		

Table H-2. Continued.

Flight 218, Wing sweep = 58°, Time = 10-26-38-000, MINF = 1.238, Camber = 2/1, ALPT = 6.70, BETA = 0.43, QINF = 651.6, RNPU = 4.2E+06

η = 0.93		0.76		0.59		0.40	
			Upper Surface				
x/c	CP	*x/c*	CP	*x/c*	CP	*x/c*	CP
0.020	-0.486	0.000	0.227	0.000	3.663**	0.010	-0.502
0.060	-0.467	0.020	-0.631	0.020	-0.507	0.020	-0.540
0.110	-0.468	0.040	-0.458	0.060	-1.852**	0.060	-0.506
0.200	-0.504	0.060	-0.514	0.090	-0.499	0.110	-0.482
0.230	-0.447	0.090	-0.476	0.110	-0.549	0.140	-0.424
0.400	-0.157	0.130	-0.491	0.130	-0.520	0.190	-0.933**
0.490	-0.089	0.150	-0.507	0.150	-0.516	0.250	-0.234
0.590	-0.099	0.200	-0.491	0.210	-0.513	0.400	-0.143
0.630	-0.086	0.250	-0.517	0.250	-0.281	0.490	-0.175
0.700	-0.092	0.260	-0.440	0.340	-0.147	0.580	-0.063
0.750	-0.149	0.280	-0.327	0.370	-0.154	0.650	-0.100
0.810	-0.151	0.290	-0.283	0.400	-0.131	0.700	-0.092
0.840	-0.140	0.310	-0.260	0.410	-1.390**	0.750	-0.126
0.900	-0.068	0.320	-0.262	0.430	-0.127	0.800	-0.113
0.960	-0.020	0.340	-0.239	0.440	-0.117	0.830	-0.178
		0.350	-0.100**	0.460	-0.128	0.900	-0.024
		0.370	-0.178	0.490	-0.096	0.960	-0.009
		0.380	-0.187	0.500	-0.134		
		0.400	-0.125	0.520	-0.127		
		0.410	-0.151	0.540	-0.130		
		0.430	-0.124	0.550	-0.104		
		0.440	-0.097	0.580	-0.109		
		0.460	-0.126	0.600	-0.125		
		0.470	-0.135	0.610	-0.130		
		0.490	-0.118	0.650	3.032**		
		0.500	-0.124	0.700	-0.176		
		0.520	-0.132	0.750	-0.215		
		0.530	-0.129	0.820	-0.237		
		0.550	-0.160	0.890	-0.273		
		0.560	-0.143	0.900	-0.196		
		0.580	-0.144	0.960	-0.098		
		0.590	-0.159				
		0.600	-0.163				
		0.640	-0.181				
		0.700	-0.195				
		0.750	-0.006**				
		0.820	-0.101				
		0.870	-0.070				
		0.930	-0.014				
		0.960	0.004				
			Lower Surface				
0.020	0.049	0.020	0.141	0.020	0.169	0.020	0.265
0.110	0.012	0.060	0.112	0.060	0.183	0.060	-0.425
0.230	-0.026	0.090	0.028	0.090	1.620**	0.110	0.147
0.400	-0.090	0.120	0.042	0.120	-0.018	0.250	0.052
0.490	-0.115	0.200	0.048	0.200	0.017	0.400	0.005
0.630	1.235**	0.260	0.023	0.250	0.009	0.490	-0.032
0.750	-0.023	0.400	-0.029	0.400	-0.019	0.580	-0.082
0.850	-0.022	0.490	-0.063	0.490	-0.009	0.650	-0.060
0.900	0.019	0.580	-0.154	0.580	-0.110	0.750	-0.021
0.960	0.022	0.640	0.021	0.650	-0.015	0.830	0.010
		0.750	0.091	0.750	0.083	0.900	0.069
		0.870	0.092	0.890	0.111	0.960	-0.004
		0.930	0.088	0.930	0.080		
		0.960	0.059	0.960	-1.431**		

Table H-2. Continued.

Flight 218, Wing sweep = 58°, Time = 10-26-38-500, MINF = 1.237, Camber = 3/0, ALPT = 7.54, BETA = 0.45, QINF = 653.3, RNPU = 4.2E+06

η = 0.93		0.76		0.59		0.40	
			Upper Surface				
x/c	CP	*x/c*	CP	*x/c*	CP	*x/c*	CP
0.020	-0.514	0.000	0.201	0.000	3.650**	0.010	-0.529
0.060	-0.490	0.020	-0.580	0.020	-0.520	0.020	-0.566
0.110	-0.512	0.040	-0.480	0.060	-1.851**	0.060	-0.559
0.200	-0.541	0.060	-0.523	0.090	-0.520	0.110	-0.529
0.230	-0.488	0.090	-0.499	0.110	-0.572	0.140	-0.469
0.400	-0.250	0.130	-0.511	0.130	-0.557	0.190	-0.933**
0.490	-0.186	0.150	-0.544	0.150	-0.561	0.250	-0.240
0.590	-0.133	0.200	-0.532	0.210	-0.558	0.400	-0.181
0.630	-0.110	0.250	-0.557	0.250	-0.335	0.490	-0.247
0.700	-0.100	0.260	-0.507	0.340	-0.232	0.580	-0.087
0.750	-0.116	0.280	-0.382	0.370	-0.193	0.650	-0.116
0.810	-0.112	0.290	-0.346	0.400	-0.151	0.700	-0.116
0.840	-0.109	0.310	-0.326	0.410	-1.390**	0.750	-0.139
0.900	-0.041	0.320	-0.326	0.430	-0.154	0.800	-0.132
0.960	-0.013	0.340	-0.320	0.440	-0.142	0.830	-0.183
		0.350	-0.118**	0.460	-0.152	0.900	-0.027
		0.370	-0.281	0.490	-0.109	0.960	-0.012
		0.380	-0.308	0.500	-0.163		
		0.400	-0.248	0.520	-0.145		
		0.410	-0.269	0.540	-0.148		
		0.430	-0.223	0.550	-0.126		
		0.440	-0.181	0.580	-0.148		
		0.460	-0.200	0.600	-0.159		
		0.470	-0.180	0.610	-0.151		
		0.490	-0.166	0.650	3.021**		
		0.500	-0.157	0.700	-0.186		
		0.520	-0.163	0.750	-0.230		
		0.530	-0.150	0.820	-0.253		
		0.550	-0.171	0.890	-0.261		
		0.560	-0.165	0.900	-0.231		
		0.580	-0.156	0.960	-0.111		
		0.590	-0.175				
		0.600	-0.173				
		0.640	-0.189				
		0.700	-0.200				
		0.750	-0.010**				
		0.820	-0.085				
		0.870	-0.055				
		0.930	-0.019				
		0.960	-0.003				
			Lower Surface				
0.020	0.073	0.020	0.160	0.020	0.172	0.020	0.269
0.110	0.033	0.060	0.151	0.060	0.197	0.060	-0.373
0.230	0.063	0.090	0.043	0.090	1.612**	0.110	0.168
0.400	-0.083	0.120	0.068	0.120	-0.007	0.250	0.059
0.490	-0.125	0.200	0.063	0.200	0.046	0.400	0.019
0.630	1.228**	0.260	0.038	0.250	0.032	0.490	-0.018
0.750	-0.052	0.400	-0.013	0.400	-0.007	0.580	-0.069
0.850	-0.036	0.490	-0.056	0.490	0.001	0.650	-0.055
0.900	-0.003	0.580	-0.150	0.580	-0.086	0.750	-0.011
0.960	0.016	0.640	0.013	0.650	-0.022	0.830	0.028
		0.750	0.080	0.750	0.073	0.900	0.074
		0.870	0.071	0.890	0.077	0.960	-0.009
		0.930	0.066	0.930	0.063		
		0.960	0.037	0.960	-1.430**		

Table H-2. Continued.

Flight 218, Wing sweep = 58°, Time = 10-26-39-500, MINF = 1.235, Camber = 5/-1, ALPT = 8.70, BETA = 0.43, QINF = 655.6, RNPU = 4.2E+06

η = 0.93		0.76		0.59		0.40	
			Upper Surface				
x/c	CP	*x/c*	CP	*x/c*	CP	*x/c*	CP
0.020	-0.507	0.000	0.209	0.000	3.631**	0.010	-0.527
0.060	-0.476	0.020	-0.583	0.020	-0.525	0.020	-0.556
0.110	-0.391	0.040	-0.451	0.060	-1.850**	0.060	-0.583
0.200	-0.583	0.060	-0.520	0.090	-0.543	0.110	-0.542
0.230	-0.537	0.090	-0.500	0.110	-0.600	0.140	-0.478
0.400	-0.317	0.130	-0.526	0.130	-0.602	0.190	-0.936**
0.490	-0.279	0.150	-0.575	0.150	-0.605	0.250	-0.325
0.590	-0.240	0.200	-0.574	0.210	-0.595	0.400	-0.225
0.630	-0.194	0.250	-0.439	0.250	-0.387	0.490	-0.351
0.700	-0.156	0.260	-0.391	0.340	-0.393	0.580	-0.139
0.750	-0.105	0.280	-0.408	0.370	-0.390	0.650	-0.134
0.810	-0.111	0.290	-0.397	0.400	-0.306	0.700	-0.116
0.840	-0.094	0.310	-0.383	0.410	-1.391**	0.750	-0.141
0.900	-0.039	0.320	-0.388	0.430	-0.170	0.800	-0.141
0.960	-0.023	0.340	-0.388	0.440	-0.119	0.830	-0.192
		0.350	-0.116**	0.460	-0.125	0.900	-0.028
		0.370	-0.364	0.490	-0.108	0.960	-0.024
		0.380	-0.406	0.500	-0.164		
		0.400	-0.361	0.520	-0.166		
		0.410	-0.378	0.540	-0.169		
		0.430	-0.356	0.550	-0.149		
		0.440	-0.321	0.580	-0.151		
		0.460	-0.348	0.600	-0.178		
		0.470	-0.339	0.610	-0.178		
		0.490	-0.312	0.650	3.004**		
		0.500	-0.300	0.700	-0.225		
		0.520	-0.311	0.750	-0.262		
		0.530	-0.291	0.820	-0.329		
		0.550	-0.267	0.890	-0.273		
		0.560	-0.275	0.900	-0.222		
		0.580	-0.262	0.960	-0.105		
		0.590	-0.264				
		0.600	-0.262				
		0.640	-0.184				
		0.700	-0.206				
		0.750	-0.004**				
		0.820	-0.071				
		0.870	-0.011				
		0.930	-0.024				
		0.960	-0.015				
			Lower Surface				
0.020	0.080	0.020	0.182	0.020	0.194	0.020	0.301
0.110	0.066	0.060	0.170	0.060	0.212	0.060	-0.342
0.230	0.127	0.090	0.087	0.090	1.601**	0.110	0.143
0.400	-0.079	0.120	0.100	0.120	0.020	0.250	0.077
0.490	-0.090	0.200	0.136	0.200	0.125	0.400	0.042
0.630	1.218**	0.260	0.063	0.250	0.083	0.490	0.003
0.750	-0.059	0.400	0.026	0.400	0.001	0.580	-0.048
0.850	-0.055	0.490	-0.050	0.490	-0.008	0.650	-0.029
0.900	-0.007	0.580	-0.137	0.580	-0.082	0.750	0.005
0.960	0.020	0.640	0.032	0.650	-0.021	0.830	0.023
		0.750	0.104	0.750	0.070	0.900	0.084
		0.870	0.062	0.890	0.068	0.960	0.001
		0.930	0.041	0.930	0.060		
		0.960	0.012	0.960	-1.431**		

Table H-2. Continued.

Flight 218, Wing sweep = 58°, Time = 10-26-40-500, MINF = 1.231, Camber = 7/-1, ALPT = 9.74, BETA = 0.43, QINF = 654.0, RNPU = 4.2E+06

η = 0.93		0.76		0.59		0.40	
			Upper Surface				
x/c	CP	*x/c*	CP	*x/c*	CP	*x/c*	CP
0.020	-0.476	0.000	0.238	0.000	3.636**	0.010	-0.536
0.060	-0.453	0.020	-0.531	0.020	-0.494	0.020	-0.558
0.110	-0.476	0.040	-0.426	0.060	-1.859**	0.060	-0.597
0.200	-0.610	0.060	-0.486	0.090	-0.545	0.110	-0.546
0.230	-0.568	0.090	-0.501	0.110	-0.603	0.140	-0.555
0.400	-0.373	0.130	-0.544	0.130	-0.625	0.190	-0.942**
0.490	-0.325	0.150	-0.597	0.150	-0.644	0.250	-0.401
0.590	-0.306	0.200	-0.611	0.210	-0.501	0.400	-0.252
0.630	-0.252	0.250	-0.464	0.250	-0.435	0.490	-0.360
0.700	-0.203	0.260	-0.430	0.340	-0.480	0.580	-0.187
0.750	-0.178	0.280	-0.452	0.370	-0.494	0.650	-0.154
0.810	-0.177	0.290	-0.448	0.400	-0.385	0.700	-0.136
0.840	-0.167	0.310	-0.436	0.410	-1.399**	0.750	-0.152
0.900	-0.095	0.320	-0.437	0.430	-0.215	0.800	-0.142
0.960	-0.065	0.340	-0.443	0.440	-0.135	0.830	-0.194
		0.350	-0.122**	0.460	-0.145	0.900	-0.032
		0.370	-0.414	0.490	-0.133	0.960	-0.025
		0.380	-0.453	0.500	-0.178		
		0.400	-0.396	0.520	-0.186		
		0.410	-0.432	0.540	-0.179		
		0.430	-0.417	0.550	-0.176		
		0.440	-0.394	0.580	-0.187		
		0.460	-0.416	0.600	-0.208		
		0.470	-0.406	0.610	-0.204		
		0.490	-0.392	0.650	3.008**		
		0.500	-0.393	0.700	-0.246		
		0.520	-0.394	0.750	-0.293		
		0.530	-0.384	0.820	-0.374		
		0.550	-0.394	0.890	-0.287		
		0.560	-0.391	0.900	-0.251		
		0.580	-0.383	0.960	-0.134		
		0.590	-0.380				
		0.600	-0.367				
		0.640	-0.223				
		0.700	-0.194				
		0.750	-0.008**				
		0.820	-0.097				
		0.870	-0.016				
		0.930	-0.039				
		0.960	-0.023				
			Lower Surface				
0.020	0.090	0.020	0.183	0.020	0.215	0.020	0.288
0.110	0.086	0.060	0.199	0.060	0.227	0.060	-0.363
0.230	0.132	0.090	0.109	0.090	1.601**	0.110	0.133
0.400	-0.053	0.120	0.127	0.120	0.071	0.250	0.107
0.490	-0.003	0.200	0.131	0.200	0.110	0.400	0.072
0.630	1.217**	0.260	0.099	0.250	0.120	0.490	0.037
0.750	-0.064	0.400	0.036	0.400	0.035	0.580	-0.023
0.850	-0.060	0.490	-0.045	0.490	0.001	0.650	-0.002
0.900	-0.008	0.580	-0.122	0.580	-0.052	0.750	0.024
0.960	0.010	0.640	0.056	0.650	-0.016	0.830	0.037
		0.750	0.117	0.750	0.086	0.900	0.089
		0.870	0.071	0.890	0.084	0.960	-0.004
		0.930	0.029	0.930	0.073		
		0.960	-0.003	0.960	-1.439**		

Table H-2. Continued.

Flight 218, Wing sweep = 58°, Time = 10-26-41-000, MINF = 1.228, Camber = 9/-1, ALPT = 10.14, BETA = 0.34, QINF = 651.8, RNPU = 4.2E+06

η = 0.93		0.76		0.59		0.40	
			Upper Surface				
x/c	CP	*x/c*	CP	*x/c*	CP	*x/c*	CP
0.020	-0.430	0.000	0.249	0.000	3.647**	0.010	-0.500
0.060	-0.386	0.020	-0.448	0.020	-0.456	0.020	-0.529
0.110	-0.454	0.040	-0.371	0.060	-1.866**	0.060	-0.604
0.200	-0.650	0.060	-0.446	0.090	-0.531	0.110	-0.568
0.230	-0.584	0.090	-0.489	0.110	-0.605	0.140	-0.550
0.400	-0.400	0.130	-0.545	0.130	-0.644	0.190	-0.947**
0.490	-0.348	0.150	-0.614	0.150	-0.619	0.250	-0.413
0.590	-0.332	0.200	-0.634	0.210	-0.506	0.400	-0.277
0.630	-0.270	0.250	-0.485	0.250	-0.467	0.490	-0.434
0.700	-0.224	0.260	-0.439	0.340	-0.514	0.580	-0.231
0.750	-0.208	0.280	-0.467	0.370	-0.508	0.650	-0.165
0.810	-0.196	0.290	-0.470	0.400	-0.445	0.700	-0.143
0.840	-0.192	0.310	-0.460	0.410	-1.405**	0.750	-0.151
0.900	-0.148	0.320	-0.466	0.430	-0.252	0.800	-0.153
0.960	-0.103	0.340	-0.478	0.440	-0.181	0.830	-0.189
		0.350	-0.159**	0.460	-0.178	0.900	-0.033
		0.370	-0.443	0.490	-0.169	0.960	-0.037
		0.380	-0.481	0.500	-0.197		
		0.400	-0.405	0.520	-0.218		
		0.410	-0.456	0.540	-0.213		
		0.430	-0.445	0.550	-0.201		
		0.440	-0.411	0.580	-0.204		
		0.460	-0.448	0.600	-0.233		
		0.470	-0.445	0.610	-0.235		
		0.490	-0.416	0.650	3.017**		
		0.500	-0.429	0.700	-0.290		
		0.520	-0.428	0.750	-0.323		
		0.530	-0.426	0.820	-0.392		
		0.550	-0.462	0.890	-0.289		
		0.560	-0.428	0.900	-0.270		
		0.580	-0.423	0.960	-0.157		
		0.590	-0.428				
		0.600	-0.415				
		0.640	-0.288				
		0.700	-0.243				
		0.750	-0.013**				
		0.820	-0.109				
		0.870	-0.026				
		0.930	-0.039				
		0.960	-0.036				
			Lower Surface				
0.020	0.083	0.020	0.179	0.020	0.204	0.020	0.261
0.110	0.088	0.060	0.197	0.060	0.232	0.060	-0.385
0.230	0.099	0.090	0.107	0.090	1.605**	0.110	0.125
0.400	-0.046	0.120	0.146	0.120	0.067	0.250	0.121
0.490	0.004	0.200	0.099	0.200	0.091	0.400	0.074
0.630	1.220**	0.260	0.117	0.250	0.116	0.490	0.040
0.750	-0.068	0.400	0.032	0.400	0.040	0.580	-0.012
0.850	-0.063	0.490	-0.050	0.490	-0.013	0.650	-0.006
0.900	-0.014	0.580	-0.117	0.580	-0.054	0.750	0.020
0.960	-0.002	0.640	0.062	0.650	-0.017	0.830	0.038
		0.750	0.110	0.750	0.092	0.900	0.086
		0.870	0.061	0.890	0.076	0.960	-0.009
		0.930	0.021	0.930	0.072		
		0.960	-0.009	0.960	-1.445**		

Table H-2. Continued.

Flight 218, Wing sweep = 58°, Time = 10-26-42-500, MINF = 1.216, Camber = 12/-1, ALPT = 11.03, BETA = 0.34, QINF = 639.0, RNPU = 4.2E+06

η = 0.93		0.76		0.59		0.40	
			Upper Surface				
x/c	CP	*x/c*	CP	*x/c*	CP	*x/c*	CP
0.020	-0.138	0.000	0.330	0.000	3.719**	0.010	-0.430
0.060	-0.324	0.020	-0.250	0.020	-0.268	0.020	-0.469
0.110	-0.466	0.040	-0.197	0.060	-1.905**	0.060	-0.565
0.200	-0.530	0.060	-0.394	0.090	-0.528	0.110	-0.581
0.230	-0.507	0.090	-0.483	0.110	-0.618	0.140	-0.565
0.400	-0.454	0.130	-0.559	0.130	-0.668	0.190	-0.967**
0.490	-0.364	0.150	-0.652	0.150	-0.519	0.250	-0.429
0.590	-0.322	0.200	-0.517	0.210	-0.522	0.400	-0.358
0.630	-0.293	0.250	-0.511	0.250	-0.491	0.490	-0.458
0.700	-0.251	0.260	-0.477	0.340	-0.540	0.580	-0.291
0.750	-0.228	0.280	-0.505	0.370	-0.537	0.650	-0.208
0.810	-0.231	0.290	-0.509	0.400	-0.455	0.700	-0.174
0.840	-0.253	0.310	-0.496	0.410	-1.434**	0.750	-0.144
0.900	-0.209	0.320	-0.504	0.430	-0.346	0.800	-0.164
0.960	-0.179	0.340	-0.511	0.440	-0.293	0.830	-0.192
		0.350	-0.204**	0.460	-0.277	0.900	-0.034
		0.370	-0.472	0.490	-0.220	0.960	-0.048
		0.380	-0.516	0.500	-0.256		
		0.400	-0.452	0.520	-0.243		
		0.410	-0.486	0.540	-0.257		
		0.430	-0.492	0.550	-0.249		
		0.440	-0.436	0.580	-0.255		
		0.460	-0.481	0.600	-0.280		
		0.470	-0.470	0.610	-0.281		
		0.490	-0.449	0.650	3.076**		
		0.500	-0.457	0.700	-0.340		
		0.520	-0.463	0.750	-0.417		
		0.530	-0.452	0.820	-0.455		
		0.550	-0.460	0.890	-0.305		
		0.560	-0.455	0.900	-0.271		
		0.580	-0.451	0.960	-0.167		
		0.590	-0.439				
		0.600	-0.441				
		0.640	-0.327				
		0.700	-0.290				
		0.750	-0.014**				
		0.820	-0.087				
		0.870	-0.024				
		0.930	-0.044				
		0.960	-0.044				
			Lower Surface				
0.020	0.082	0.020	0.170	0.020	0.201	0.020	0.197
0.110	0.095	0.060	0.209	0.060	0.245	0.060	-0.415
0.230	0.045	0.090	0.136	0.090	1.636**	0.110	0.178
0.400	0.062	0.120	0.189	0.120	0.107	0.250	0.134
0.490	0.000	0.200	0.040	0.200	0.025	0.400	0.075
0.630	1.243**	0.260	0.136	0.250	0.160	0.490	0.047
0.750	-0.054	0.400	0.038	0.400	0.065	0.580	0.006
0.850	-0.036	0.490	-0.022	0.490	-0.001	0.650	0.024
0.900	-0.022	0.580	0.025	0.580	-0.052	0.750	0.043
0.960	-0.015	0.640	0.059	0.650	-0.035	0.830	0.064
		0.750	0.104	0.750	0.104	0.900	0.108
		0.870	0.065	0.890	0.090	0.960	0.001
		0.930	0.019	0.930	0.056		
		0.960	-0.017	0.960	-1.475**		

Table H-2. Continued.

Flight 218, Wing sweep = 58°, Time = 10-28-24-000, MINF = 1.197, Camber = 4/-1, ALPT = 7.55, BETA = 0.51, QINF = 565.8, RNPU = 3.7E+06

η = 0.93		0.76		0.59		0.40	
			Upper Surface				
x/c	CP	*x/c*	CP	*x/c*	CP	*x/c*	CP
0.020	-0.527	0.000	0.222	0.000	4.295**	0.010	-0.528
0.060	-0.475	0.020	-0.577	0.020	-0.535	0.020	-0.543
0.110	-0.519	0.040	-0.453	0.060	-2.056**	0.060	-0.570
0.200	-0.585	0.060	-0.524	0.090	-0.521	0.110	-0.514
0.230	-0.503	0.090	-0.497	0.110	-0.602	0.140	-0.464
0.400	-0.251	0.130	-0.539	0.130	-0.583	0.190	-0.997**
0.490	-0.186	0.150	-0.564	0.150	-0.597	0.250	-0.227
0.590	-0.155	0.200	-0.569	0.210	-0.585	0.400	-0.200
0.630	-0.128	0.250	-0.403	0.250	-0.344	0.490	-0.253
0.700	-0.090	0.260	-0.368	0.340	-0.235	0.580	-0.085
0.750	-0.068	0.280	-0.377	0.370	-0.180	0.650	-0.129
0.810	-0.064	0.290	-0.370	0.400	-0.130	0.700	-0.120
0.840	-0.056	0.310	-0.356	0.410	-1.525**	0.750	-0.136
0.900	-0.036	0.320	-0.369	0.430	-0.148	0.800	-0.158
0.960	-0.014	0.340	-0.351	0.440	-0.137	0.830	-0.187
		0.350	-0.118**	0.460	-0.163	0.900	-0.019
		0.370	-0.310	0.490	-0.108	0.960	-0.008
		0.380	-0.333	0.500	-0.176		
		0.400	-0.251	0.520	-0.166		
		0.410	-0.265	0.540	-0.177		
		0.430	-0.226	0.550	-0.140		
		0.440	-0.166	0.580	-0.155		
		0.460	-0.216	0.600	-0.183		
		0.470	-0.195	0.610	-0.177		
		0.490	-0.178	0.650	3.569**		
		0.500	-0.181	0.700	-0.170		
		0.520	-0.179	0.750	-0.246		
		0.530	-0.170	0.820	-0.260		
		0.550	-0.185	0.890	-0.242		
		0.560	-0.189	0.900	-0.216		
		0.580	-0.186	0.960	-0.063		
		0.590	-0.194				
		0.600	-0.203				
		0.640	-0.201				
		0.700	-0.217				
		0.750	-0.013**				
		0.820	-0.073				
		0.870	-0.054				
		0.930	-0.016				
		0.960	-0.001				
			Lower Surface				
0.020	0.063	0.020	0.106	0.020	0.196	0.020	0.277
0.110	0.036	0.060	0.132	0.060	0.184	0.060	-0.437
0.230	0.116	0.090	0.046	0.090	1.942**	0.110	0.081
0.400	-0.116	0.120	0.090	0.120	-0.005	0.250	0.053
0.490	-0.064	0.200	0.122	0.200	0.098	0.400	0.016
0.630	1.499**	0.260	0.039	0.250	0.055	0.490	-0.007
0.750	-0.082	0.400	-0.003	0.400	-0.020	0.580	-0.064
0.850	-0.048	0.490	-0.080	0.490	0.003	0.650	-0.048
0.900	-0.025	0.580	-0.170	0.580	-0.082	0.750	-0.014
0.960	0.011	0.640	0.011	0.650	-0.009	0.830	0.039
		0.750	0.098	0.750	0.056	0.900	0.121
		0.870	0.061	0.890	0.057	0.960	-0.001
		0.930	0.033	0.930	0.039		
		0.960	0.020	0.960	-1.571**		

Table H-2. Continued.

Flight 218, Wing sweep = 58°, Time = 10-30-25-000, MINF = 1.218, Camber = 0/2, ALPT = 7.49, BETA = 0.43, QINF = 572.7, RNPU = 3.7E+06

η = 0.93		0.76		0.59		0.40	
			Upper Surface				
x/c	CP	*x/c*	CP	*x/c*	CP	*x/c*	CP
0.020	-0.658	0.000	0.122	0.000	4.265**	0.010	-0.621
0.060	-0.618	0.020	-0.692	0.020	-0.663	0.020	-0.645
0.110	-0.618	0.040	-0.633	0.060	-2.092**	0.060	-0.597
0.200	-0.581	0.060	-0.640	0.090	-0.620	0.110	-0.521
0.230	-0.465	0.090	-0.589	0.110	-0.662	0.140	-0.407
0.400	-0.221	0.130	-0.599	0.130	-0.610	0.190	-0.964**
0.490	-0.157	0.150	-0.594	0.150	-0.588	0.250	-0.258
0.590	-0.118	0.200	-0.570	0.210	-0.575	0.400	-0.173
0.630	-0.108	0.250	-0.383	0.250	-0.317	0.490	-0.251
0.700	-0.107	0.260	-0.333	0.340	-0.166	0.580	-0.091
0.750	-0.204	0.280	-0.366	0.370	-0.173	0.650	-0.125
0.810	-0.205	0.290	-0.342	0.400	-0.136	0.700	-0.115
0.840	-0.208	0.310	-0.337	0.410	-1.485**	0.750	-0.135
0.900	-0.084	0.320	-0.340	0.430	-0.154	0.800	-0.150
0.960	-0.033	0.340	-0.329	0.440	-0.143	0.830	-0.183
		0.350	-0.186**	0.460	-0.147	0.900	-0.036
		0.370	-0.278	0.490	-0.131	0.960	-0.027
		0.380	-0.289	0.500	-0.172		
		0.400	-0.167	0.520	-0.162		
		0.410	-0.228	0.540	-0.161		
		0.430	-0.172	0.550	-0.124		
		0.440	-0.149	0.580	-0.126		
		0.460	-0.164	0.600	-0.157		
		0.470	-0.151	0.610	-0.165		
		0.490	-0.139	0.650	3.547**		
		0.500	-0.149	0.700	-0.203		
		0.520	-0.151	0.750	-0.255		
		0.530	-0.139	0.820	-0.305		
		0.550	-0.170	0.890	-0.337		
		0.560	-0.167	0.900	-0.246		
		0.580	-0.178	0.960	-0.129		
		0.590	-0.172				
		0.600	-0.188				
		0.640	-0.202				
		0.700	-0.236				
		0.750	-0.019**				
		0.820	-0.123				
		0.870	-0.072				
		0.930	-0.035				
		0.960	-0.012				
			Lower Surface				
0.020	0.084	0.020	0.150	0.020	0.219	0.020	0.314
0.110	0.034	0.060	0.135	0.060	0.194	0.060	-0.394
0.230	0.024	0.090	0.052	0.090	1.940**	0.110	0.181
0.400	-0.116	0.120	0.061	0.120	0.003	0.250	0.052
0.490	-0.102	0.200	0.073	0.200	0.015	0.400	0.005
0.630	1.502**	0.260	0.030	0.250	0.023	0.490	-0.011
0.750	-0.030	0.400	-0.029	0.400	-0.011	0.580	-0.065
0.850	-0.015	0.490	-0.082	0.490	-0.022	0.650	-0.059
0.900	0.018	0.580	-0.177	0.580	-0.101	0.750	-0.028
0.960	0.015	0.640	0.072	0.650	-0.026	0.830	0.018
		0.750	0.127	0.750	0.096	0.900	0.076
		0.870	0.100	0.890	0.127	0.960	-0.012
		0.930	0.080	0.930	0.104		
		0.960	0.044	0.960	-1.107**		

Table H-2. Continued.

Flight 218, Wing sweep = 58°, Time = 10-30-33-000, MINF = 1.220, Camber = 0/2, ALPT = 8.31, BETA = 0.37, QINF = 575.5, RNPU = 3.7E+06

η = 0.93		0.76		0.59		0.40	
			Upper Surface				
x/c	CP	*x/c*	CP	*x/c*	CP	*x/c*	CP
0.020	-0.687	0.000	0.089	0.000	4.244**	0.010	-0.658
0.060	-0.641	0.020	-0.737	0.020	-0.673	0.020	-0.669
0.110	-0.634	0.040	-0.656	0.060	-2.081**	0.060	-0.623
0.200	-0.600	0.060	-0.674	0.090	-0.644	0.110	-0.510
0.230	-0.394	0.090	-0.634	0.110	-0.677	0.140	-0.455
0.400	-0.286	0.130	-0.640	0.130	-0.639	0.190	-0.959**
0.490	-0.243	0.150	-0.627	0.150	-0.615	0.250	-0.278
0.590	-0.211	0.200	-0.598	0.210	-0.468	0.400	-0.212
0.630	-0.181	0.250	-0.417	0.250	-0.372	0.490	-0.312
0.700	-0.148	0.260	-0.377	0.340	-0.295	0.580	-0.103
0.750	-0.185	0.280	-0.392	0.370	-0.234	0.650	-0.121
0.810	-0.182	0.290	-0.382	0.400	-0.144	0.700	-0.122
0.840	-0.173	0.310	-0.367	0.410	-1.478**	0.750	-0.138
0.900	-0.071	0.320	-0.374	0.430	-0.150	0.800	-0.138
0.960	-0.025	0.340	-0.385	0.440	-0.135	0.830	-0.195
		0.350	-0.185**	0.460	-0.143	0.900	-0.027
		0.370	-0.355	0.490	-0.111	0.960	-0.009
		0.380	-0.382	0.500	-0.165		
		0.400	-0.333	0.520	-0.171		
		0.410	-0.353	0.540	-0.171		
		0.430	-0.324	0.550	-0.139		
		0.440	-0.283	0.580	-0.133		
		0.460	-0.294	0.600	-0.171		
		0.470	-0.288	0.610	-0.168		
		0.490	-0.257	0.650	3.530**		
		0.500	-0.237	0.700	-0.224		
		0.520	-0.225	0.750	-0.277		
		0.530	-0.203	0.820	-0.362		
		0.550	-0.203	0.890	-0.345		
		0.560	-0.190	0.900	-0.250		
		0.580	-0.169	0.960	-0.107		
		0.590	-0.178				
		0.600	-0.173				
		0.640	-0.199				
		0.700	-0.218				
		0.750	-0.006**				
		0.820	-0.082				
		0.870	-0.042				
		0.930	-0.017				
		0.960	-0.021				
			Lower Surface				
0.020	0.109	0.020	0.168	0.020	0.245	0.020	0.360
0.110	0.060	0.060	0.175	0.060	0.225	0.060	-0.373
0.230	0.053	0.090	0.079	0.090	1.931**	0.110	0.170
0.400	-0.093	0.120	0.101	0.120	0.026	0.250	0.054
0.490	0.003	0.200	0.103	0.200	0.037	0.400	0.032
0.630	1.495**	0.260	0.031	0.250	0.072	0.490	-0.003
0.750	-0.025	0.400	0.018	0.400	0.004	0.580	-0.049
0.850	0.002	0.490	-0.067	0.490	-0.009	0.650	-0.032
0.900	0.031	0.580	-0.161	0.580	-0.063	0.750	0.001
0.960	0.036	0.640	0.100	0.650	-0.015	0.830	0.018
		0.750	0.151	0.750	0.126	0.900	0.083
		0.870	0.111	0.890	0.142	0.960	-0.010
		0.930	0.091	0.930	0.115		
		0.960	0.051	0.960	-1.102**		

Table H-2. Continued.

Flight 222, Wing sweep = 58°, Time = 11-35-51-500, MINF = 1.395, Camber = 0/2, ALPT = 4.24, BETA = 0.43, QINF = 790.9, RNPU = 4.9E+06

η = 0.93		0.76		0.59		0.40	
			Upper Surface				
x/c	CP	*x/c*	CP	*x/c*	CP	*x/c*	CP
0.020	-0.287	0.000	0.297	0.000	1.305**	0.010	-0.335
0.060	-0.295	0.020	-0.301	0.020	-0.281	0.020	-0.359
0.110	-0.287	0.040	-0.285	0.060	-1.526**	0.060	-0.333
0.200	-0.265	0.060	-0.332	0.090	-0.333	0.110	-0.318
0.230	-0.233	0.090	-0.296	0.110	-0.349	0.140	-0.294
0.400	-0.119	0.130	-0.303	0.130	-0.299	0.190	-0.734**
0.490	-0.076	0.150	-0.299	0.150	-0.295	0.250	-0.201
0.590	-0.073	0.200	-0.267	0.210	-0.297	0.400	-0.137
0.630	-0.058	0.250	-0.285	0.250	-0.219	0.490	-0.101
0.700	-0.095	0.260	-0.266	0.340	-0.199	0.580	-0.070
0.750	-0.142	0.280	-0.272	0.370	-0.162	0.650	-0.093
0.810	-0.138	0.290	-0.252	0.400	-0.141	0.700	-0.082
0.840	-0.135	0.310	-0.219	0.410	-0.159**	0.750	-0.097
0.900	-0.248	0.320	-0.220	0.430	-0.128	0.800	-0.105
0.960	-0.121	0.340	-0.218	0.440	-0.112	0.830	-0.138
		0.350	-0.133**	0.460	-0.119	0.900	-0.047
		0.370	-0.180	0.490	-0.074	0.960	-0.042
		0.380	-0.171	0.500	-0.115		
		0.400	-0.114	0.520	-0.101		
		0.410	-0.133	0.540	-0.098		
		0.430	-0.108	0.550	-0.076		
		0.440	-0.080	0.580	-0.079		
		0.460	-0.109	0.600	-0.086		
		0.470	-0.090	0.610	-0.083		
		0.490	-0.092	0.650	0.785**		
		0.500	-0.093	0.700	-0.126		
		0.520	-0.088	0.750	-0.144		
		0.530	-0.085	0.820	-0.168		
		0.550	-0.102	0.890	-0.240		
		0.560	-0.094	0.900	-0.234		
		0.580	-0.083	0.960	-0.093		
		0.590	-0.101				
		0.600	-0.104				
		0.640	-0.127				
		0.700	-0.130				
		0.750	-0.043**				
		0.820	-0.097				
		0.870	-0.122				
		0.930	-0.216				
		0.960	-0.089				
			Lower Surface				
0.020	0.000	0.020	0.037	0.020	0.048	0.020	0.193
0.110	-0.050	0.060	0.080	0.060	0.039	0.060	0.676**
0.230	-0.055	0.090	-0.016	0.090	0.405**	0.110	-0.037
0.400	-0.098	0.120	-0.011	0.120	-0.138	0.250	-0.048
0.490	-0.110	0.200	0.000	0.200	-0.045	0.400	-0.028
0.630	0.698**	0.260	-0.057	0.250	-0.025	0.490	-0.078
0.750	-0.028	0.400	-0.081	0.400	-0.072	0.580	-0.102
0.850	-0.013	0.490	-0.122	0.490	-0.044	0.650	-0.088
0.900	0.011	0.580	-0.165	0.580	-0.142	0.750	-0.096
0.960	0.009	0.640	-0.177	0.650	-0.050	0.830	-0.030
		0.750	0.055	0.750	-0.037	0.900	0.024
		0.870	0.068	0.890	0.119	0.960	-0.041
		0.930	0.059	0.930	0.107		
		0.960	0.023	0.960	-0.821**		

Table H-2. Continued.

Flight 222, Wing sweep = 58°, Time = 11-36-0-000, MINF = 1.395, Camber = 0/2, ALPT = 3.56, BETA = 0.45, QINF = 789.7, RNPU = 4.9E+06

η = 0.93		0.76		0.59		0.40	
			Upper Surface				
x/c	CP	*x/c*	CP	*x/c*	CP	*x/c*	CP
0.020	-0.262	0.000	0.306	0.000	1.308**	0.010	-0.275
0.060	-0.255	0.020	-0.271	0.020	-0.268	0.020	-0.356
0.110	-0.312	0.040	-0.253	0.060	-1.527**	0.060	-0.301
0.200	-0.226	0.060	-0.284	0.090	-0.308	0.110	-0.280
0.230	-0.204	0.090	-0.263	0.110	-0.311	0.140	-0.246
0.400	-0.078	0.130	-0.283	0.130	-0.258	0.190	-0.734**
0.490	-0.062	0.150	-0.262	0.150	-0.250	0.250	-0.206
0.590	-0.063	0.200	-0.221	0.210	-0.263	0.400	-0.114
0.630	-0.053	0.250	-0.232	0.250	-0.187	0.490	-0.085
0.700	-0.089	0.260	-0.198	0.340	-0.164	0.580	-0.059
0.750	-0.136	0.280	-0.205	0.370	-0.135	0.650	-0.085
0.810	-0.134	0.290	-0.205	0.400	-0.106	0.700	-0.069
0.840	-0.135	0.310	-0.194	0.410	-0.158**	0.750	-0.088
0.900	-0.248	0.320	-0.202	0.430	-0.110	0.800	-0.090
0.960	-0.126	0.340	-0.196	0.440	-0.095	0.830	-0.127
		0.350	-0.124**	0.460	-0.101	0.900	-0.046
		0.370	-0.131	0.490	-0.064	0.960	-0.039
		0.380	-0.130	0.500	-0.096		
		0.400	-0.080	0.520	-0.087		
		0.410	-0.110	0.540	-0.081		
		0.430	-0.057	0.550	-0.061		
		0.440	-0.066	0.580	-0.045		
		0.460	-0.090	0.600	-0.071		
		0.470	-0.081	0.610	-0.067		
		0.490	-0.074	0.650	0.788**		
		0.500	-0.080	0.700	-0.121		
		0.520	-0.072	0.750	-0.130		
		0.530	-0.070	0.820	-0.156		
		0.550	-0.081	0.890	-0.233		
		0.560	-0.081	0.900	-0.237		
		0.580	-0.059	0.960	-0.087		
		0.590	-0.087				
		0.600	-0.090				
		0.640	-0.116				
		0.700	-0.119				
		0.750	-0.043**				
		0.820	-0.099				
		0.870	-0.117				
		0.930	-0.207				
		0.960	-0.099				
			Lower Surface				
0.020	0.017	0.020	-0.008	0.020	0.025	0.020	0.174
0.110	-0.064	0.060	0.008	0.060	0.025	0.060	0.678**
0.230	-0.075	0.090	-0.057	0.090	0.407**	0.110	-0.051
0.400	-0.103	0.120	-0.007	0.120	-0.143	0.250	-0.064
0.490	-0.117	0.200	-0.015	0.200	-0.067	0.400	-0.032
0.630	0.701**	0.260	-0.062	0.250	-0.030	0.490	-0.086
0.750	-0.041	0.400	-0.090	0.400	-0.075	0.580	-0.107
0.850	-0.016	0.490	-0.128	0.490	-0.044	0.650	-0.092
0.900	0.007	0.580	-0.170	0.580	-0.158	0.750	-0.120
0.960	0.014	0.640	-0.189	0.650	-0.049	0.830	-0.030
		0.750	0.049	0.750	-0.041	0.900	0.046
		0.870	0.083	0.890	0.115	0.960	-0.040
		0.930	0.059	0.930	0.102		
		0.960	0.025	0.960	-0.821**		

Table H-2. Continued.

Flight 222, Wing sweep = 58°, Time = 11-36-3-500, MINF = 1.399, Camber = 0/2, ALPT = 2.43, BETA = 0.48, QINF = 795.4, RNPU = 5.0E+06

η = 0.93		0.76		0.59		0.40	
			Upper Surface				
x/c	CP	*x/c*	CP	*x/c*	CP	*x/c*	CP
0.020	-0.145	0.000	-0.766	0.000	1.298**	0.010	-0.262
0.060	-0.159	0.020	3.229	0.020	-0.217	0.020	-0.302
0.110	-0.207	0.040	-0.160	0.060	-1.517**	0.060	-0.260
0.200	-0.145	0.060	2.040	0.090	-0.236	0.110	-0.234
0.230	-0.158	0.090	-0.207	0.110	-0.251	0.140	-0.191
0.400	-0.048	0.130	-0.206	0.130	-0.197	0.190	-0.730**
0.490	-0.045	0.150	-0.188	0.150	-0.183	0.250	-0.179
0.590	-0.065	0.200	-0.142	0.210	-0.197	0.400	-0.091
0.630	-0.052	0.250	-0.179	0.250	-0.160	0.490	-0.058
0.700	-0.091	0.260	-0.167	0.340	-0.129	0.580	-0.048
0.750	-0.138	0.280	-0.175	0.370	-0.108	0.650	-0.070
0.810	-0.301	0.290	-0.185	0.400	-0.098	0.700	-0.050
0.840	-0.749	0.310	-0.166	0.410	-0.158**	0.750	-0.075
0.900	-0.247	0.320	-0.158	0.430	-0.088	0.800	-0.072
0.960	-0.129	0.340	-0.130	0.440	-0.072	0.830	-0.110
		0.350	-0.108**	0.460	-0.081	0.900	-0.047
		0.370	-0.088	0.490	-0.037	0.960	-0.038
		0.380	-0.094	0.500	-0.072		
		0.400	-0.027	0.520	-0.069		
		0.410	-0.084	0.540	-0.061		
		0.430	-0.064	0.550	-0.039		
		0.440	-0.043	0.580	-0.033		
		0.460	-0.066	0.600	-0.054		
		0.470	-0.060	0.610	-0.042		
		0.490	-0.055	0.650	0.781**		
		0.500	-0.051	0.700	-0.099		
		0.520	1.396	0.750	-0.117		
		0.530	-0.048	0.820	-0.139		
		0.550	1.572	0.890	-0.224		
		0.560	-0.065	0.900	-0.223		
		0.580	-0.055	0.960	-0.087		
		0.590	-0.072				
		0.600	-0.061				
		0.640	-0.105				
		0.700	-0.104				
		0.750	-0.047**				
		0.820	-0.094				
		0.870	-0.110				
		0.930	-0.207				
		0.960	-0.110				
			Lower Surface				
0.020	-0.075	0.020	-0.071	0.020	-0.008	0.020	0.139
0.110	0.478	0.060	-0.010	0.060	-0.001	0.060	0.672**
0.230	-0.090	0.090	-0.108	0.090	0.402**	0.110	-0.067
0.400	-0.125	0.120	-0.732	0.120	-0.160	0.250	-0.149
0.490	-0.135	0.200	-0.020	0.200	0.399	0.400	-0.050
0.630	0.694**	0.260	-0.073	0.250	-0.094	0.490	-0.100
0.750	-0.065	0.400	-0.108	0.400	0.708	0.580	-0.126
0.850	-0.026	0.490	-0.144	0.490	-0.050	0.650	-0.112
0.900	0.000	0.580	-0.183	0.580	-0.163	0.750	-0.149
0.960	0.017	0.640	-0.201	0.650	-0.055	0.830	-0.041
		0.750	0.024	0.750	-0.042	0.900	0.028
		0.870	0.046	0.890	0.099	0.960	-0.041
		0.930	0.099	0.930	0.086		
		0.960	-0.596	0.960	-0.816**		

Table H-2. Continued.

Flight 222, Wing sweep = 58°, Time = 11-36-6-000, MINF = 1.403, Camber = 0/2, ALPT = 2.48, BETA = 0.48, QINF = 805.4, RNPU = 5.0E+06

η = 0.93		0.76		0.59		0.40	
			Upper Surface				
x/c	CP	*x/c*	CP	*x/c*	CP	*x/c*	CP
0.020	-0.139	0.000	0.325	0.000	1.277**	0.010	-0.258
0.060	-0.180	0.020	-0.216	0.020	-0.210	0.020	-0.297
0.110	-0.225	0.040	-0.158	0.060	-1.503**	0.060	-0.248
0.200	-0.138	0.060	-0.233	0.090	-0.236	0.110	-0.230
0.230	-0.148	0.090	-0.203	0.110	-0.247	0.140	-0.201
0.400	-0.046	0.130	-0.212	0.130	-0.196	0.190	-0.726**
0.490	-0.046	0.150	-0.184	0.150	-0.179	0.250	-0.176
0.590	-0.062	0.200	-0.141	0.210	-0.196	0.400	-0.089
0.630	-0.055	0.250	-0.175	0.250	-0.157	0.490	-0.056
0.700	-0.091	0.260	-0.164	0.340	-0.132	0.580	-0.035
0.750	-0.134	0.280	-0.179	0.370	-0.100	0.650	-0.068
0.810	-0.134	0.290	-0.182	0.400	-0.082	0.700	-0.052
0.840	-0.136	0.310	-0.166	0.410	-0.161**	0.750	-0.075
0.900	-0.244	0.320	-0.164	0.430	-0.085	0.800	-0.065
0.960	-0.128	0.340	-0.131	0.440	-0.072	0.830	-0.107
		0.350	-0.106**	0.460	-0.079	0.900	-0.041
		0.370	-0.087	0.490	-0.038	0.960	-0.038
		0.380	-0.093	0.500	-0.070		
		0.400	-0.050	0.520	-0.064		
		0.410	-0.082	0.540	-0.060		
		0.430	-0.062	0.550	-0.042		
		0.440	-0.042	0.580	-0.031		
		0.460	-0.066	0.600	-0.052		
		0.470	-0.058	0.610	-0.041		
		0.490	-0.052	0.650	0.767**		
		0.500	-0.054	0.700	-0.112		
		0.520	-0.050	0.750	-0.114		
		0.530	-0.047	0.820	-0.136		
		0.550	-0.059	0.890	-0.221		
		0.560	-0.063	0.900	-0.223		
		0.580	-0.053	0.960	-0.087		
		0.590	-0.069				
		0.600	-0.072				
		0.640	-0.104				
		0.700	-0.103				
		0.750	-0.045**				
		0.820	-0.094				
		0.870	-0.109				
		0.930	-0.199				
		0.960	-0.117				
			Lower Surface				
0.020	-0.066	0.020	-0.064	0.020	-0.022	0.020	0.143
0.110	-0.066	0.060	-0.031	0.060	-0.003	0.060	0.659**
0.230	-0.085	0.090	-0.106	0.090	0.393**	0.110	-0.065
0.400	-0.127	0.120	-0.126	0.120	-0.156	0.250	-0.161
0.490	-0.132	0.200	-0.015	0.200	-0.138	0.400	-0.045
0.630	0.681**	0.260	-0.074	0.250	-0.105	0.490	-0.098
0.750	-0.063	0.400	-0.104	0.400	-0.088	0.580	-0.123
0.850	-0.023	0.490	-0.140	0.490	-0.049	0.650	-0.113
0.900	0.005	0.580	-0.179	0.580	-0.160	0.750	-0.146
0.960	0.018	0.640	-0.197	0.650	-0.054	0.830	-0.039
		0.750	0.031	0.750	-0.035	0.900	0.030
		0.870	0.054	0.890	0.102	0.960	-0.039
		0.930	0.059	0.930	0.089		
		0.960	0.031	0.960	-0.811**		

Table H-2. Continued.

Flight 222, Wing sweep = 58°, Time = 11-36-9-000, MINF = 1.408, Camber = 0/2, ALPT = 3.65, BETA = 0.45, QINF = 822.3, RNPU = 5.1E+06

η = 0.93		0.76		0.59		0.40	
			Upper Surface				
x/c	CP	*x/c*	CP	*x/c*	CP	*x/c*	CP
0.020	-0.228	0.000	0.312	0.000	1.241**	0.010	-0.272
0.060	-0.241	0.020	-0.246	0.020	-0.266	0.020	-0.340
0.110	-0.232	0.040	-0.247	0.060	-1.482**	0.060	-0.288
0.200	-0.226	0.060	-0.284	0.090	-0.273	0.110	-0.282
0.230	-0.195	0.090	-0.261	0.110	-0.307	0.140	-0.248
0.400	-0.091	0.130	-0.266	0.130	-0.256	0.190	-0.721**
0.490	-0.067	0.150	-0.260	0.150	-0.252	0.250	-0.197
0.590	-0.063	0.200	-0.224	0.210	-0.264	0.400	-0.117
0.630	-0.049	0.250	-0.245	0.250	-0.193	0.490	-0.085
0.700	-0.092	0.260	-0.224	0.340	-0.173	0.580	-0.058
0.750	-0.132	0.280	-0.203	0.370	-0.140	0.650	-0.081
0.810	-0.131	0.290	-0.200	0.400	-0.112	0.700	-0.070
0.840	-0.127	0.310	-0.192	0.410	-0.168**	0.750	-0.092
0.900	-0.238	0.320	-0.193	0.430	-0.110	0.800	-0.073
0.960	-0.133	0.340	-0.198	0.440	-0.091	0.830	-0.121
		0.350	-0.132**	0.460	-0.101	0.900	-0.043
		0.370	-0.156	0.490	-0.056	0.960	-0.038
		0.380	-0.144	0.500	-0.092		
		0.400	-0.092	0.520	-0.089		
		0.410	-0.114	0.540	-0.082		
		0.430	-0.090	0.550	-0.063		
		0.440	-0.067	0.580	-0.042		
		0.460	-0.095	0.600	-0.073		
		0.470	-0.082	0.610	-0.064		
		0.490	-0.073	0.650	0.741**		
		0.500	-0.054	0.700	-0.112		
		0.520	-0.077	0.750	-0.129		
		0.530	-0.068	0.820	-0.149		
		0.550	-0.083	0.890	-0.229		
		0.560	-0.079	0.900	-0.235		
		0.580	-0.068	0.960	-0.087		
		0.590	-0.086				
		0.600	-0.088				
		0.640	-0.117				
		0.700	-0.118				
		0.750	-0.041**				
		0.820	-0.089				
		0.870	-0.110				
		0.930	-0.207				
		0.960	-0.116				
			Lower Surface				
0.020	0.039	0.020	0.008	0.020	0.033	0.020	0.185
0.110	-0.056	0.060	0.013	0.060	0.022	0.060	0.635**
0.230	-0.066	0.090	-0.050	0.090	0.375**	0.110	-0.048
0.400	-0.099	0.120	-0.001	0.120	-0.134	0.250	-0.061
0.490	-0.109	0.200	-0.005	0.200	-0.059	0.400	-0.033
0.630	0.663**	0.260	-0.051	0.250	-0.020	0.490	-0.079
0.750	-0.038	0.400	-0.083	0.400	-0.064	0.580	-0.102
0.850	-0.016	0.490	-0.122	0.490	-0.042	0.650	-0.091
0.900	0.011	0.580	-0.160	0.580	-0.151	0.750	-0.108
0.960	0.017	0.640	-0.176	0.650	-0.047	0.830	-0.031
		0.750	0.049	0.750	-0.039	0.900	0.047
		0.870	0.074	0.890	0.122	0.960	-0.048
		0.930	0.064	0.930	0.107		
		0.960	0.027	0.960	-0.793**		

Table H-2. Continued.

Flight 222, Wing sweep = 58°, Time = 11-36-10-500, MINF = 1.410, Camber = 0/2, ALPT = 5.41, BETA = 0.45, QINF = 832.6, RNPU = 5.2E+06, CNWP = 0.1637

η = 0.93		0.76		0.59		0.40	
			Upper Surface				
x/c	CP	*x/c*	CP	*x/c*	CP	*x/c*	CP
0.020	-0.336	0.000	0.288	0.000	1.218**	0.010	-0.365
0.060	-0.319	0.020	-0.369	0.020	-0.333	0.020	-0.373
0.110	-0.379	0.040	-0.315	0.060	-1.455**	0.060	-0.364
0.200	0.103	0.060	-0.349	0.090	-0.370	0.110	-0.367
0.230	-0.289	0.090	-0.332	0.110	-0.397	0.140	-0.370
0.400	-0.275	0.130	-0.336	0.130	-0.730	0.190	-0.719**
0.490	-0.114	0.150	-0.330	0.150	-0.332	0.250	-0.256
0.590	-0.082	0.200	-0.304	0.210	-0.330	0.400	0.570
0.630	-0.062	0.250	-0.330	0.250	-0.307	0.490	-0.134
0.700	-0.095	0.260	-0.313	0.340	-0.232	0.580	-0.097
0.750	-0.140	0.280	-0.319	0.370	-0.199	0.650	-0.112
0.810	-0.136	0.290	-0.313	0.400	-0.163	0.700	-0.095
0.840	-0.133	0.310	-0.301	0.410	-0.173**	0.750	-0.103
0.900	-0.244	0.320	-0.302	0.430	-0.154	0.800	-0.091
0.960	-0.110	0.340	-0.304	0.440	-0.138	0.830	-0.142
		0.350	-0.163**	0.460	-0.140	0.900	-0.050
		0.370	-0.268	0.490	-0.103	0.960	-0.045
		0.380	-0.253	0.500	-0.127		
		0.400	-0.174	0.520	-0.121		
		0.410	-0.188	0.540	-0.117		
		0.430	-0.151	0.550	-0.093		
		0.440	-0.125	0.580	-0.082		
		0.460	-0.141	0.600	-0.789		
		0.470	-0.131	0.610	-0.098		
		0.490	0.382	0.650	0.725**		
		0.500	-0.120	0.700	-0.129		
		0.520	-0.111	0.750	-0.158		
		0.530	-0.106	0.820	-0.180		
		0.550	-0.128	0.890	-0.243		
		0.560	-0.115	0.900	-0.229		
		0.580	0.554	0.960	-0.096		
		0.590	-0.120				
		0.600	-0.116				
		0.640	-0.326				
		0.700	-0.138				
		0.750	-0.034**				
		0.820	-0.091				
		0.870	-0.117				
		0.930	-0.189				
		0.960	-0.065				
			Lower Surface				
0.020	0.065	0.020	0.133	0.020	0.096	0.020	0.230
0.110	-0.026	0.060	0.103	0.060	0.075	0.060	0.621**
0.230	-0.025	0.090	0.007	0.090	0.363**	0.110	-0.015
0.400	-0.071	0.120	0.003	0.120	-0.042	0.250	-0.028
0.490	-0.079	0.200	0.020	0.200	0.024	0.400	-0.011
0.630	0.648**	0.260	-0.033	0.250	-0.006	0.490	-0.061
0.750	-0.015	0.400	-0.054	0.400	-0.052	0.580	-0.082
0.850	0.003	0.490	-0.097	0.490	-0.033	0.650	-0.071
0.900	0.025	0.580	-0.146	0.580	-0.129	0.750	-0.048
0.960	0.022	0.640	-0.143	0.650	-0.042	0.830	0.376
		0.750	0.070	0.750	-0.040	0.900	0.020
		0.870	0.106	0.890	0.129	0.960	-0.078
		0.930	0.074	0.930	0.117		
		0.960	0.034	0.960	-0.791**		
CN =	0.146		0.177		0.203		0.082

Table H-2. Continued.

Flight 222, Wing sweep = 58°, Time = 11-36-13-000, MINF = 1.405, Camber = 0/2, ALPT = 7.58, BETA = 0.45, QINF = 836.9, RNPU = 5.2E+06

η = 0.93		0.76		0.59		0.40	
			Upper Surface				
x/c	CP	*x/c*	CP	*x/c*	CP	*x/c*	CP
0.020	-0.420	0.000	0.217	0.000	1.203**	0.010	-0.447
0.060	-0.407	0.020	-0.471	0.020	-0.424	0.020	-0.470
0.110	-0.398	0.040	-0.419	0.060	-1.456**	0.060	-0.449
0.200	-0.391	0.060	-0.428	0.090	-0.422	0.110	-0.444
0.230	-0.296	0.090	-0.420	0.110	-0.468	0.140	-0.444
0.400	-0.353	0.130	-0.419	0.130	-0.436	0.190	-0.724**
0.490	-0.333	0.150	-0.414	0.150	-0.424	0.250	-0.294
0.590	-0.160	0.200	-0.386	0.210	-0.424	0.400	-0.196
0.630	-0.131	0.250	-0.414	0.250	-0.400	0.490	-0.257
0.700	-0.132	0.260	-0.394	0.340	-0.275	0.580	-0.109
0.750	-0.168	0.280	-0.404	0.370	-0.252	0.650	-0.133
0.810	-0.160	0.290	-0.395	0.400	-0.216	0.700	-0.116
0.840	-0.156	0.310	-0.391	0.410	-0.181**	0.750	-0.130
0.900	-0.148	0.320	-0.392	0.430	-0.211	0.800	-0.112
0.960	-0.057	0.340	-0.400	0.440	-0.187	0.830	-0.170
		0.350	-0.203**	0.460	-0.192	0.900	-0.049
		0.370	-0.378	0.490	-0.160	0.960	-0.051
		0.380	-0.414	0.500	-0.172		
		0.400	-0.355	0.520	-0.171		
		0.410	-0.361	0.540	-0.159		
		0.430	-0.263	0.550	-0.139		
		0.440	-0.231	0.580	-0.122		
		0.460	-0.241	0.600	-0.159		
		0.470	-0.221	0.610	-0.150		
		0.490	-0.207	0.650	0.712**		
		0.500	-0.177	0.700	-0.161		
		0.520	-0.200	0.750	-0.199		
		0.530	-0.181	0.820	-0.223		
		0.550	-0.191	0.890	-0.285		
		0.560	-0.179	0.900	-0.274		
		0.580	-0.170	0.960	-0.155		
		0.590	-0.176				
		0.600	-0.171				
		0.640	-0.164				
		0.700	-0.186				
		0.750	-0.043**				
		0.820	-0.107				
		0.870	-0.117				
		0.930	-0.077				
		0.960	-0.047				
			Lower Surface				
0.020	0.123	0.020	0.175	0.020	0.198	0.020	0.274
0.110	0.022	0.060	0.140	0.060	0.175	0.060	0.635**
0.230	0.020	0.090	0.052	0.090	0.352**	0.110	0.070
0.400	-0.031	0.120	0.057	0.120	0.023	0.250	0.005
0.490	-0.041	0.200	0.052	0.200	0.031	0.400	0.022
0.630	0.635**	0.260	0.004	0.250	0.023	0.490	-0.027
0.750	0.013	0.400	-0.021	0.400	-0.022	0.580	-0.057
0.850	0.016	0.490	-0.067	0.490	-0.041	0.650	-0.044
0.900	0.050	0.580	-0.121	0.580	-0.101	0.750	-0.027
0.960	0.020	0.640	-0.091	0.650	-0.049	0.830	0.003
		0.750	0.099	0.750	-0.038	0.900	0.031
		0.870	0.093	0.890	0.143	0.960	-0.035
		0.930	0.079	0.930	0.113		
		0.960	0.034	0.960	-0.796**		

Table H-2. Continued.

Flight 222, Wing sweep = 58°, Time = 11-36-14-000, MINF = 1.400, Camber = 0/2, ALPT = 8.35, BETA = 0.45, QINF = 833.5, RNPU = 5.2E+06

η = 0.93		0.76		0.59		0.40	
			Upper Surface				
x/c	CP	*x/c*	CP	*x/c*	CP	*x/c*	CP
0.020	-0.438	0.000	0.199	0.000	1.207**	0.010	-0.471
0.060	-0.432	0.020	-0.507	0.020	-0.466	0.020	-0.493
0.110	-0.427	0.040	-0.449	0.060	-1.464**	0.060	-0.477
0.200	-0.417	0.060	-0.465	0.090	-0.468	0.110	-0.470
0.230	-0.384	0.090	-0.450	0.110	-0.496	0.140	-0.469
0.400	-0.377	0.130	-0.446	0.130	-0.460	0.190	-0.729**
0.490	-0.350	0.150	-0.443	0.150	-0.448	0.250	-0.312
0.590	-0.198	0.200	-0.415	0.210	-0.449	0.400	-0.213
0.630	-0.169	0.250	-0.441	0.250	-0.429	0.490	-0.292
0.700	-0.164	0.260	-0.419	0.340	-0.291	0.580	-0.124
0.750	-0.198	0.280	-0.432	0.370	-0.271	0.650	-0.132
0.810	-0.185	0.290	-0.425	0.400	-0.258	0.700	-0.118
0.840	-0.183	0.310	-0.417	0.410	-0.183**	0.750	-0.129
0.900	-0.102	0.320	-0.418	0.430	-0.256	0.800	-0.119
0.960	-0.062	0.340	-0.426	0.440	-0.239	0.830	-0.177
		0.350	-0.211**	0.460	-0.239	0.900	-0.058
		0.370	-0.408	0.490	-0.219	0.960	-0.053
		0.380	-0.439	0.500	-0.210		
		0.400	-0.320	0.520	-0.197		
		0.410	-0.310	0.540	-0.181		
		0.430	-0.271	0.550	-0.158		
		0.440	-0.246	0.580	-0.117		
		0.460	-0.264	0.600	-0.157		
		0.470	-0.252	0.610	-0.148		
		0.490	-0.240	0.650	0.735**		
		0.500	-0.238	0.700	-0.170		
		0.520	-0.233	0.750	-0.204		
		0.530	-0.226	0.820	-0.258		
		0.550	-0.235	0.890	-0.303		
		0.560	-0.228	0.900	-0.298		
		0.580	-0.218	0.960	-0.172		
		0.590	-0.226				
		0.600	-0.215				
		0.640	-0.189				
		0.700	-0.213				
		0.750	-0.046**				
		0.820	-0.108				
		0.870	-0.098				
		0.930	-0.109				
		0.960	-0.071				
			Lower Surface				
0.020	0.132	0.020	0.185	0.020	0.214	0.020	0.305
0.110	0.037	0.060	0.148	0.060	0.221	0.060	0.636**
0.230	0.031	0.090	0.063	0.090	0.379**	0.110	0.086
0.400	-0.008	0.120	0.066	0.120	0.028	0.250	0.060
0.490	-0.024	0.200	0.069	0.200	0.027	0.400	0.029
0.630	0.636**	0.260	0.021	0.250	0.029	0.490	-0.015
0.750	0.019	0.400	-0.012	0.400	-0.015	0.580	-0.048
0.850	0.021	0.490	-0.062	0.490	-0.045	0.650	-0.032
0.900	0.058	0.580	-0.112	0.580	-0.095	0.750	-0.020
0.960	0.018	0.640	-0.085	0.650	-0.053	0.830	0.008
		0.750	0.101	0.750	-0.045	0.900	0.033
		0.870	0.100	0.890	0.155	0.960	-0.039
		0.930	0.079	0.930	0.120		
		0.960	0.032	0.960	-0.800**		

Table H-2. Continued.

Flight 222, Wing sweep = 58°, Time = 11-36-16-000, MINF = 1.385, Camber = 0/2, ALPT = 8.95, BETA = 0.40, QINF = 816.0, RNPU = 5.1E+06

η = 0.93		0.76		0.59		0.40	
			Upper Surface				
x/c	CP	*x/c*	CP	*x/c*	CP	*x/c*	CP
0.020	-0.470	0.000	0.164	0.000	1.232**	0.010	-0.495
0.060	-0.472	0.020	-0.544	0.020	-0.509	0.020	-0.525
0.110	-0.463	0.040	-0.486	0.060	-1.495**	0.060	-0.501
0.200	-0.450	0.060	-0.503	0.090	-0.496	0.110	-0.490
0.230	-0.425	0.090	-0.481	0.110	-0.529	0.140	-0.498
0.400	-0.413	0.130	-0.478	0.130	-0.493	0.190	-0.744**
0.490	-0.321	0.150	-0.479	0.150	-0.482	0.250	-0.335
0.590	-0.231	0.200	-0.450	0.210	-0.482	0.400	-0.231
0.630	-0.202	0.250	-0.470	0.250	-0.460	0.490	-0.346
0.700	-0.203	0.260	-0.451	0.340	-0.319	0.580	-0.159
0.750	-0.228	0.280	-0.463	0.370	-0.326	0.650	-0.140
0.810	-0.216	0.290	-0.459	0.400	-0.299	0.700	-0.119
0.840	-0.206	0.310	-0.449	0.410	-0.187**	0.750	-0.135
0.900	-0.119	0.320	-0.451	0.430	-0.289	0.800	-0.128
0.960	-0.095	0.340	-0.458	0.440	-0.273	0.830	-0.183
		0.350	-0.221**	0.460	-0.276	0.900	-0.063
		0.370	-0.358	0.490	-0.232	0.960	-0.058
		0.380	-0.344	0.500	-0.227		
		0.400	-0.316	0.520	-0.213		
		0.410	-0.311	0.540	-0.186		
		0.430	-0.287	0.550	-0.149		
		0.440	-0.270	0.580	-0.151		
		0.460	-0.284	0.600	-0.160		
		0.470	-0.287	0.610	-0.152		
		0.490	-0.276	0.650	0.745**		
		0.500	-0.261	0.700	-0.191		
		0.520	-0.281	0.750	-0.227		
		0.530	-0.261	0.820	-0.272		
		0.550	-0.282	0.890	-0.315		
		0.560	-0.280	0.900	-0.318		
		0.580	-0.275	0.960	-0.184		
		0.590	-0.270				
		0.600	-0.262				
		0.640	-0.227				
		0.700	-0.246				
		0.750	-0.051**				
		0.820	-0.112				
		0.870	-0.086				
		0.930	-0.133				
		0.960	-0.095				
			Lower Surface				
0.020	0.153	0.020	0.188	0.020	0.236	0.020	0.308
0.110	0.044	0.060	0.159	0.060	0.215	0.060	0.639**
0.230	0.043	0.090	0.073	0.090	0.381**	0.110	0.097
0.400	-0.028	0.120	0.083	0.120	0.023	0.250	0.100
0.490	-0.037	0.200	0.075	0.200	0.022	0.400	0.034
0.630	0.650**	0.260	0.034	0.250	0.036	0.490	-0.558
0.750	0.012	0.400	-0.004	0.400	-0.003	0.580	-0.043
0.850	0.024	0.490	-0.052	0.490	-0.048	0.650	-0.033
0.900	0.055	0.580	-0.106	0.580	-0.084	0.750	-0.012
0.960	0.014	0.640	-0.084	0.650	-0.057	0.830	0.014
		0.750	0.107	0.750	-0.052	0.900	0.038
		0.870	0.097	0.890	0.158	0.960	-0.033
		0.930	0.075	0.930	0.117		
		0.960	0.027	0.960	-0.818**		

Table H-2. Continued.

Flight 222, Wing sweep = 58°, Time = 11-42-6-000, MINF = 1.403, Camber = 1/2, ALPT = 4.20, BETA = 0.40, QINF = 786.1, RNPU = 4.9E+06

η = 0.93		0.76		0.59		0.40	
			Upper Surface				
x/c	CP	*x/c*	CP	*x/c*	CP	*x/c*	CP
0.020	-0.242	0.000	0.313	0.000	1.337**	0.010	-0.295
0.060	-0.249	0.020	-0.257	0.020	-0.275	0.020	-0.351
0.110	-0.247	0.040	-0.249	0.060	-1.505**	0.060	-0.318
0.200	-0.260	0.060	-0.285	0.090	-0.309	0.110	-0.310
0.230	-0.246	0.090	-0.264	0.110	-0.322	0.140	-0.287
0.400	-0.144	0.130	-0.281	0.130	-0.281	0.190	-0.726**
0.490	-0.080	0.150	-0.283	0.150	-0.283	0.250	-0.233
0.590	-0.076	0.200	-0.261	0.210	-0.294	0.400	-0.136
0.630	-0.058	0.250	-0.286	0.250	-0.221	0.490	-0.100
0.700	-0.099	0.260	-0.271	0.340	-0.210	0.580	-0.069
0.750	-0.150	0.280	-0.275	0.370	-0.168	0.650	-0.088
0.810	-0.148	0.290	-0.265	0.400	-0.134	0.700	-0.081
0.840	-0.144	0.310	-0.231	0.410	-0.147**	0.750	-0.105
0.900	-0.261	0.320	-0.231	0.430	-0.133	0.800	-0.087
0.960	-0.126	0.340	-0.222	0.440	-0.115	0.830	-0.134
		0.350	-0.136**	0.460	-0.118	0.900	-0.045
		0.370	-0.192	0.490	-0.070	0.960	-0.040
		0.380	-0.191	0.500	-0.110		
		0.400	-0.134	0.520	-0.106		
		0.410	-0.141	0.540	-0.097		
		0.430	-0.112	0.550	-0.073		
		0.440	-0.089	0.580	-0.051		
		0.460	-0.113	0.600	-0.085		
		0.470	-0.104	0.610	-0.077		
		0.490	-0.093	0.650	0.820**		
		0.500	-0.090	0.700	-0.128		
		0.520	-0.098	0.750	-0.139		
		0.530	-0.085	0.820	-0.169		
		0.550	-0.098	0.890	-0.245		
		0.560	-0.090	0.900	-0.238		
		0.580	-0.082	0.960	-0.091		
		0.590	-0.097				
		0.600	-0.103				
		0.640	-0.126				
		0.700	-0.131				
		0.750	-0.046**				
		0.820	-0.100				
		0.870	-0.128				
		0.930	-0.223				
		0.960	-0.093				
			Lower Surface				
0.020	0.021	0.020	0.014	0.020	0.026	0.020	0.175
0.110	-0.051	0.060	0.037	0.060	0.025	0.060	0.710**
0.230	-0.097	0.090	-0.008	0.090	0.443**	0.110	-0.035
0.400	-0.095	0.120	-0.009	0.120	-0.114	0.250	-0.046
0.490	-0.100	0.200	-0.001	0.200	-0.025	0.400	-0.026
0.630	0.721**	0.260	-0.048	0.250	-0.021	0.490	-0.080
0.750	-0.035	0.400	-0.083	0.400	-0.071	0.580	-0.101
0.850	-0.007	0.490	-0.120	0.490	-0.046	0.650	-0.078
0.900	0.012	0.580	-0.164	0.580	-0.144	0.750	-0.113
0.960	0.011	0.640	-0.180	0.650	-0.052	0.830	-0.030
		0.750	0.054	0.750	-0.034	0.900	0.024
		0.870	0.077	0.890	0.126	0.960	-0.042
		0.930	0.059	0.930	0.112		
		0.960	0.027	0.960	-0.802**		

Table H-2. Continued.

Flight 222, Wing sweep = 58°, Time = 11-42-18-000, MINF = 1.404, Camber = 1/2, ALPT = 3.93, BETA = 0.43, QINF = 785.5, RNPU = 4.9E+06

η = 0.93		0.76		0.59		0.40	
			Upper Surface				
x/c	CP	*x/c*	CP	*x/c*	CP	*x/c*	CP
0.020	-0.177	0.000	0.312	0.000	1.340**	0.010	-0.262
0.060	-0.208	0.020	-0.234	0.020	-0.256	0.020	-0.342
0.110	-0.233	0.040	-0.230	0.060	-1.505**	0.060	-0.300
0.200	-0.245	0.060	-0.266	0.090	-0.292	0.110	-0.294
0.230	-0.245	0.090	-0.249	0.110	-0.303	0.140	-0.272
0.400	-0.122	0.130	-0.267	0.130	-0.271	0.190	-0.725**
0.490	-0.078	0.150	-0.269	0.150	-0.265	0.250	-0.215
0.590	-0.071	0.200	-0.247	0.210	-0.282	0.400	-0.126
0.630	-0.055	0.250	-0.275	0.250	-0.214	0.490	-0.091
0.700	-0.097	0.260	-0.257	0.340	-0.197	0.580	-0.058
0.750	-0.147	0.280	-0.258	0.370	-0.148	0.650	-0.087
0.810	-0.141	0.290	-0.224	0.400	-0.121	0.700	-0.071
0.840	-0.143	0.310	-0.211	0.410	-0.146**	0.750	-0.098
0.900	-0.259	0.320	-0.211	0.430	-0.120	0.800	-0.083
0.960	-0.124	0.340	-0.213	0.440	-0.106	0.830	-0.129
		0.350	-0.126**	0.460	-0.111	0.900	-0.044
		0.370	-0.181	0.490	-0.086	0.960	-0.039
		0.380	-0.172	0.500	-0.107		
		0.400	-0.112	0.520	-0.099		
		0.410	-0.130	0.540	-0.085		
		0.430	-0.104	0.550	-0.069		
		0.440	-0.083	0.580	-0.056		
		0.460	-0.102	0.600	-0.079		
		0.470	-0.092	0.610	-0.071		
		0.490	-0.084	0.650	0.822**		
		0.500	-0.082	0.700	-0.120		
		0.520	-0.082	0.750	-0.133		
		0.530	-0.077	0.820	-0.161		
		0.550	-0.093	0.890	-0.240		
		0.560	-0.089	0.900	-0.235		
		0.580	-0.078	0.960	-0.089		
		0.590	-0.094				
		0.600	-0.096				
		0.640	-0.121				
		0.700	-0.125				
		0.750	-0.044**				
		0.820	-0.096				
		0.870	-0.125				
		0.930	-0.223				
		0.960	-0.094				
			Lower Surface				
0.020	0.019	0.020	-0.025	0.020	0.016	0.020	0.171
0.110	-0.060	0.060	0.035	0.060	0.022	0.060	0.712**
0.230	-0.106	0.090	-0.042	0.090	0.445**	0.110	-0.049
0.400	-0.101	0.120	-0.005	0.120	-0.116	0.250	-0.055
0.490	-0.108	0.200	-0.005	0.200	-0.036	0.400	-0.028
0.630	0.723**	0.260	-0.049	0.250	-0.028	0.490	-0.078
0.750	-0.038	0.400	-0.085	0.400	-0.071	0.580	-0.107
0.850	-0.012	0.490	-0.118	0.490	-0.045	0.650	-0.085
0.900	0.012	0.580	-0.163	0.580	-0.148	0.750	-0.115
0.960	0.012	0.640	-0.182	0.650	-0.050	0.830	-0.035
		0.750	0.052	0.750	-0.031	0.900	0.035
		0.870	0.075	0.890	0.125	0.960	-0.038
		0.930	0.066	0.930	0.110		
		0.960	0.027	0.960	-0.801**		

Table H-2. Continued.

Flight 222, Wing sweep = 58°, Time = 11-42-26-500, MINF = 1.406, Camber = 0/3, ALPT = 3.51, BETA = 0.43, QINF = 788.3, RNPU = 4.9E+06

η = 0.93		0.76		0.59		0.40	
			Upper Surface				
x/c	CP	*x/c*	CP	*x/c*	CP	*x/c*	CP
0.020	-0.155	0.000	0.318	0.000	1.335**	0.010	-0.261
0.060	-0.197	0.020	-0.198	0.020	-0.240	0.020	-0.333
0.110	-0.219	0.040	-0.214	0.060	-1.500**	0.060	-0.283
0.200	-0.215	0.060	-0.254	0.090	-0.283	0.110	-0.271
0.230	-0.216	0.090	-0.232	0.110	-0.271	0.140	-0.231
0.400	-0.088	0.130	-0.244	0.130	-0.252	0.190	-0.722**
0.490	-0.059	0.150	-0.247	0.150	-0.242	0.250	-0.199
0.590	-0.068	0.200	-0.215	0.210	-0.256	0.400	-0.113
0.630	-0.051	0.250	-0.245	0.250	-0.194	0.490	-0.080
0.700	-0.095	0.260	-0.209	0.340	-0.179	0.580	-0.049
0.750	-0.149	0.280	-0.204	0.370	-0.142	0.650	-0.081
0.810	-0.127	0.290	-0.204	0.400	-0.110	0.700	-0.063
0.840	-0.145	0.310	-0.196	0.410	-0.145**	0.750	-0.097
0.900	-0.263	0.320	-0.197	0.430	-0.120	0.800	-0.080
0.960	-0.124	0.340	-0.208	0.440	-0.097	0.830	-0.121
		0.350	-0.126**	0.460	-0.100	0.900	-0.044
		0.370	-0.154	0.490	-0.054	0.960	-0.036
		0.380	-0.142	0.500	-0.091		
		0.400	-0.086	0.520	-0.085		
		0.410	-0.113	0.540	-0.080		
		0.430	-0.088	0.550	-0.055		
		0.440	-0.070	0.580	-0.043		
		0.460	-0.088	0.600	-0.075		
		0.470	-0.087	0.610	-0.060		
		0.490	-0.074	0.650	0.819**		
		0.500	-0.069	0.700	-0.112		
		0.520	-0.070	0.750	-0.124		
		0.530	-0.067	0.820	-0.156		
		0.550	-0.082	0.890	-0.238		
		0.560	-0.079	0.900	-0.232		
		0.580	-0.065	0.960	-0.085		
		0.590	-0.083				
		0.600	-0.088				
		0.640	-0.118				
		0.700	-0.119				
		0.750	-0.044**				
		0.820	-0.093				
		0.870	-0.124				
		0.930	-0.224				
		0.960	-0.097				
			Lower Surface				
0.020	0.007	0.020	-0.034	0.020	0.007	0.020	0.163
0.110	-0.071	0.060	-0.007	0.060	0.017	0.060	0.709**
0.230	-0.105	0.090	-0.079	0.090	0.443**	0.110	-0.057
0.400	-0.105	0.120	-0.016	0.120	-0.112	0.250	-0.082
0.490	-0.127	0.200	-0.008	0.200	-0.062	0.400	-0.039
0.630	0.721**	0.260	-0.052	0.250	-0.028	0.490	-0.084
0.750	-0.038	0.400	-0.093	0.400	-0.073	0.580	-0.118
0.850	-0.010	0.490	-0.126	0.490	-0.046	0.650	-0.085
0.900	0.013	0.580	-0.167	0.580	-0.150	0.750	-0.133
0.960	0.017	0.640	-0.187	0.650	-0.053	0.830	-0.035
		0.750	0.049	0.750	-0.032	0.900	0.053
		0.870	0.075	0.890	0.123	0.960	-0.043
		0.930	0.070	0.930	0.107		
		0.960	0.032	0.960	-0.798**		

Table H-2. Continued.

Flight 222, Wing sweep = 58°, Time = 11-42-29-500, MINF = 1.409, Camber = 0/3, ALPT = 2.38, BETA = 0.45, QINF = 792.6, RNPU = 4.9E+06

η = 0.93		0.76		0.59		0.40	
			Upper Surface				
x/c	CP	*x/c*	CP	*x/c*	CP	*x/c*	CP
0.020	-0.122	0.000	0.324	0.000	1.327**	0.010	-0.247
0.060	-0.162	0.020	-0.161	0.020	-0.200	0.020	-0.277
0.110	-0.161	0.040	-0.161	0.060	-1.492**	0.060	-0.243
0.200	-0.134	0.060	-0.218	0.090	-0.225	0.110	-0.211
0.230	-0.174	0.090	-0.192	0.110	-0.224	0.140	-0.164
0.400	-0.044	0.130	-0.184	0.130	-0.184	0.190	-0.719**
0.490	-0.034	0.150	-0.171	0.150	-0.168	0.250	-0.177
0.590	-0.054	0.200	-0.124	0.210	-0.192	0.400	-0.091
0.630	-0.057	0.250	-0.166	0.250	-0.161	0.490	-0.052
0.700	-0.096	0.260	-0.159	0.340	-0.130	0.580	-0.030
0.750	-0.168	0.280	-0.175	0.370	-0.103	0.650	-0.068
0.810	-0.160	0.290	-0.180	0.400	-0.082	0.700	-0.052
0.840	-0.168	0.310	-0.165	0.410	-0.145**	0.750	-0.075
0.900	-0.286	0.320	-0.159	0.430	-0.086	0.800	-0.064
0.960	-0.113	0.340	-0.127	0.440	-0.074	0.830	-0.108
		0.350	-0.112**	0.460	-0.077	0.900	-0.041
		0.370	-0.087	0.490	-0.037	0.960	-0.039
		0.380	-0.091	0.500	-0.063		
		0.400	-0.049	0.520	-0.060		
		0.410	-0.075	0.540	-0.059		
		0.430	-0.052	0.550	-0.031		
		0.440	-0.044	0.580	-0.025		
		0.460	-0.056	0.600	-0.046		
		0.470	-0.060	0.610	-0.045		
		0.490	-0.051	0.650	0.814**		
		0.500	-0.044	0.700	-0.099		
		0.520	-0.047	0.750	-0.112		
		0.530	-0.040	0.820	-0.147		
		0.550	-0.062	0.890	-0.245		
		0.560	-0.055	0.900	-0.222		
		0.580	-0.044	0.960	-0.079		
		0.590	-0.063				
		0.600	-0.057				
		0.640	-0.102				
		0.700	-0.105				
		0.750	-0.038**				
		0.820	-0.096				
		0.870	-0.134				
		0.930	-0.240				
		0.960	-0.092				
			Lower Surface				
0.020	-0.066	0.020	-0.090	0.020	-0.033	0.020	0.138
0.110	-0.148	0.060	-0.038	0.060	-0.003	0.060	0.705**
0.230	-0.091	0.090	-0.110	0.090	0.440**	0.110	-0.057
0.400	-0.126	0.120	-0.133	0.120	-0.135	0.250	-0.187
0.490	-0.135	0.200	-0.055	0.200	-0.139	0.400	-0.047
0.630	0.716**	0.260	-0.066	0.250	-0.125	0.490	-0.104
0.750	-0.047	0.400	-0.109	0.400	-0.092	0.580	-0.131
0.850	-0.007	0.490	-0.147	0.490	-0.045	0.650	-0.102
0.900	0.019	0.580	-0.180	0.580	-0.167	0.750	-0.165
0.960	0.015	0.640	-0.204	0.650	-0.048	0.830	-0.048
		0.750	0.043	0.750	-0.034	0.900	0.026
		0.870	0.070	0.890	0.138	0.960	-0.044
		0.930	0.081	0.930	0.114		
		0.960	0.037	0.960	-0.794**		

Table H-2. Continued.

Flight 222, Wing sweep = 58°, Time = 11-42-30-500, MINF = 1.411, Camber = 0/3, ALPT = 2.38, BETA = 0.45, QINF = 795.2, RNPU = 4.9E+06

η = 0.93		0.76		0.59		0.40	
			Upper Surface				
x/c	CP	*x/c*	CP	*x/c*	CP	*x/c*	CP
0.020	-0.117	0.000	0.329	0.000	1.322**	0.010	-0.255
0.060	-0.162	0.020	-0.185	0.020	-0.194	0.020	-0.279
0.110	-0.160	0.040	-0.153	0.060	-1.488**	0.060	-0.237
0.200	-0.133	0.060	-0.218	0.090	-0.233	0.110	-0.205
0.230	-0.147	0.090	-0.187	0.110	-0.220	0.140	-0.137
0.400	-0.035	0.130	-0.174	0.130	-0.179	0.190	-0.718**
0.490	-0.041	0.150	-0.161	0.150	-0.153	0.250	-0.169
0.590	-0.055	0.200	-0.122	0.210	-0.183	0.400	-0.086
0.630	-0.048	0.250	-0.167	0.250	-0.155	0.490	-0.050
0.700	-0.093	0.260	-0.160	0.340	-0.128	0.580	-0.025
0.750	-0.167	0.280	-0.170	0.370	-0.098	0.650	-0.063
0.810	-0.164	0.290	-0.173	0.400	-0.077	0.700	-0.053
0.840	-0.168	0.310	-0.156	0.410	-0.146**	0.750	-0.073
0.900	-0.293	0.320	-0.153	0.430	-0.080	0.800	-0.062
0.960	-0.111	0.340	-0.127	0.440	-0.069	0.830	-0.103
		0.350	-0.107**	0.460	-0.072	0.900	-0.039
		0.370	-0.081	0.490	-0.038	0.960	-0.034
		0.380	-0.088	0.500	-0.068		
		0.400	-0.032	0.520	-0.061		
		0.410	-0.076	0.540	-0.054		
		0.430	-0.057	0.550	-0.032		
		0.440	-0.051	0.580	-0.025		
		0.460	-0.057	0.600	-0.044		
		0.470	-0.058	0.610	-0.040		
		0.490	-0.045	0.650	0.811**		
		0.500	-0.044	0.700	-0.091		
		0.520	-0.060	0.750	-0.105		
		0.530	-0.040	0.820	-0.152		
		0.550	-0.050	0.890	-0.242		
		0.560	-0.056	0.900	-0.224		
		0.580	-0.048	0.960	-0.075		
		0.590	-0.064				
		0.600	-0.063				
		0.640	-0.097				
		0.700	-0.100				
		0.750	-0.038**				
		0.820	-0.094				
		0.870	-0.130				
		0.930	-0.234				
		0.960	-0.085				
			Lower Surface				
0.020	-0.091	0.020	-0.081	0.020	-0.022	0.020	0.137
0.110	-0.150	0.060	-0.034	0.060	-0.009	0.060	0.702**
0.230	-0.083	0.090	-0.104	0.090	0.438**	0.110	-0.060
0.400	-0.127	0.120	-0.125	0.120	-0.130	0.250	-0.184
0.490	-0.136	0.200	-0.067	0.200	-0.136	0.400	-0.054
0.630	0.713**	0.260	-0.069	0.250	-0.119	0.490	-0.099
0.750	-0.036	0.400	-0.105	0.400	-0.087	0.580	-0.130
0.850	-0.001	0.490	-0.143	0.490	-0.046	0.650	-0.097
0.900	0.024	0.580	-0.181	0.580	-0.161	0.750	-0.160
0.960	0.018	0.640	-0.198	0.650	-0.049	0.830	-0.043
		0.750	0.042	0.750	-0.029	0.900	0.030
		0.870	0.071	0.890	0.137	0.960	-0.033
		0.930	0.080	0.930	0.122		
		0.960	0.047	0.960	-0.793**		

Table H-2. Continued.

Flight 222, Wing sweep = 58°, Time = 11-42-32-500, MINF = 1.411, Camber = 0/3, ALPT = 4.74, BETA = 0.40, QINF = 800.8, RNPU = 5.0E+06

η = 0.93		0.76		0.59		0.40	
			Upper Surface				
x/c	CP	*x/c*	CP	*x/c*	CP	*x/c*	CP
0.020	-0.273	0.000	0.295	0.000	1.307**	0.010	-0.321
0.060	-0.269	0.020	-0.260	0.020	-0.285	0.020	-0.360
0.110	-0.268	0.040	-0.272	0.060	-1.483**	0.060	-0.343
0.200	-0.274	0.060	-0.309	0.090	-0.331	0.110	-0.330
0.230	-0.263	0.090	-0.285	0.110	-0.343	0.140	-0.315
0.400	-0.209	0.130	-0.298	0.130	-0.312	0.190	-0.718**
0.490	-0.094	0.150	-0.302	0.150	-0.290	0.250	-0.244
0.590	-0.084	0.200	-0.275	0.210	-0.306	0.400	-0.149
0.630	-0.057	0.250	-0.299	0.250	-0.263	0.490	-0.115
0.700	-0.100	0.260	-0.284	0.340	-0.223	0.580	-0.077
0.750	-0.157	0.280	-0.290	0.370	-0.188	0.650	-0.098
0.810	-0.148	0.290	-0.287	0.400	-0.154	0.700	-0.091
0.840	-0.153	0.310	-0.273	0.410	-0.150**	0.750	-0.111
0.900	-0.272	0.320	-0.273	0.430	-0.142	0.800	-0.083
0.960	-0.121	0.340	-0.254	0.440	-0.128	0.830	-0.141
		0.350	-0.139**	0.460	-0.131	0.900	-0.045
		0.370	-0.210	0.490	-0.083	0.960	-0.040
		0.380	-0.217	0.500	-0.119		
		0.400	-0.164	0.520	-0.117		
		0.410	-0.169	0.540	-0.105		
		0.430	-0.131	0.550	-0.083		
		0.440	-0.114	0.580	-0.050		
		0.460	-0.124	0.600	-0.092		
		0.470	-0.116	0.610	-0.086		
		0.490	-0.104	0.650	0.800**		
		0.500	-0.104	0.700	-0.128		
		0.520	-0.091	0.750	-0.144		
		0.530	-0.094	0.820	-0.174		
		0.550	-0.096	0.890	-0.251		
		0.560	-0.105	0.900	-0.223		
		0.580	-0.090	0.960	-0.092		
		0.590	-0.122				
		0.600	-0.107				
		0.640	-0.130				
		0.700	-0.136				
		0.750	-0.044**				
		0.820	-0.097				
		0.870	-0.132				
		0.930	-0.226				
		0.960	-0.076				
			Lower Surface				
0.020	0.036	0.020	0.039	0.020	0.055	0.020	0.195
0.110	-0.046	0.060	0.070	0.060	0.040	0.060	0.691**
0.230	-0.072	0.090	-0.002	0.090	0.429**	0.110	-0.031
0.400	-0.089	0.120	-0.001	0.120	-0.099	0.250	-0.043
0.490	-0.101	0.200	0.012	0.200	-0.015	0.400	-0.022
0.630	0.703**	0.260	-0.041	0.250	-0.019	0.490	-0.070
0.750	-0.024	0.400	-0.074	0.400	-0.066	0.580	-0.097
0.850	-0.002	0.490	-0.112	0.490	-0.043	0.650	-0.078
0.900	0.020	0.580	-0.158	0.580	-0.136	0.750	-0.093
0.960	0.011	0.640	-0.169	0.650	-0.051	0.830	-0.029
		0.750	0.062	0.750	-0.032	0.900	0.017
		0.870	0.072	0.890	0.136	0.960	-0.039
		0.930	0.068	0.930	0.121		
		0.960	0.030	0.960	-0.793**		

Table H-2. Continued.

Flight 222, Wing sweep = 58°, Time = 11-42-34-000, MINF = 1.408, Camber = 1/1, ALPT = 6.44, BETA = 0.43, QINF = 802.3, RNPU = 5.0E+06

η = 0.93		0.76		0.59		0.40	
			Upper Surface				
x/c	CP	*x/c*	CP	*x/c*	CP	*x/c*	CP
0.020	-0.331	0.000	0.279	0.000	1.301**	0.010	-0.369
0.060	-0.311	0.020	-0.373	0.020	-0.328	0.020	-0.423
0.110	-0.313	0.040	-0.312	0.060	-1.485**	0.060	-0.382
0.200	-0.347	0.060	-0.348	0.090	-0.378	0.110	-0.385
0.230	-0.283	0.090	-0.338	0.110	-0.396	0.140	-0.408
0.400	-0.325	0.130	-0.342	0.130	-0.379	0.190	-0.721**
0.490	-0.285	0.150	-0.358	0.150	-0.383	0.250	-0.268
0.590	-0.126	0.200	-0.342	0.210	-0.381	0.400	-0.179
0.630	-0.098	0.250	-0.377	0.250	-0.361	0.490	-0.182
0.700	-0.116	0.260	-0.361	0.340	-0.277	0.580	-0.113
0.750	-0.135	0.280	-0.367	0.370	-0.239	0.650	-0.129
0.810	-0.128	0.290	-0.364	0.400	-0.199	0.700	-0.115
0.840	-0.126	0.310	-0.353	0.410	-0.154**	0.750	-0.118
0.900	-0.213	0.320	-0.354	0.430	-0.191	0.800	-0.097
0.960	-0.082	0.340	-0.364	0.440	-0.171	0.830	-0.161
		0.350	-0.174**	0.460	-0.169	0.900	-0.043
		0.370	-0.346	0.490	-0.126	0.960	-0.034
		0.380	-0.374	0.500	-0.154		
		0.400	-0.321	0.520	-0.142		
		0.410	-0.318	0.540	-0.139		
		0.430	-0.224	0.550	-0.115		
		0.440	-0.198	0.580	-0.102		
		0.460	-0.201	0.600	-0.130		
		0.470	-0.184	0.610	-0.119		
		0.490	-0.164	0.650	0.794**		
		0.500	-0.163	0.700	-0.152		
		0.520	-0.156	0.750	-0.172		
		0.530	-0.142	0.820	-0.187		
		0.550	-0.153	0.890	-0.234		
		0.560	-0.151	0.900	-0.223		
		0.580	-0.133	0.960	-0.107		
		0.590	-0.143				
		0.600	-0.146				
		0.640	-0.153				
		0.700	-0.160				
		0.750	-0.035**				
		0.820	-0.096				
		0.870	-0.113				
		0.930	-0.126				
		0.960	-0.051				
			Lower Surface				
0.020	0.070	0.020	0.117	0.020	0.096	0.020	0.215
0.110	-0.004	0.060	0.107	0.060	0.135	0.060	0.686**
0.230	-0.056	0.090	0.021	0.090	0.424**	0.110	0.002
0.400	-0.032	0.120	0.032	0.120	-0.003	0.250	-0.029
0.490	-0.069	0.200	0.017	0.200	0.050	0.400	0.004
0.630	0.697**	0.260	-0.001	0.250	0.008	0.490	-0.043
0.750	-0.032	0.400	-0.039	0.400	-0.040	0.580	-0.079
0.850	-0.018	0.490	-0.083	0.490	-0.031	0.650	-0.058
0.900	0.004	0.580	-0.138	0.580	-0.118	0.750	-0.048
0.960	0.008	0.640	-0.132	0.650	-0.041	0.830	-0.010
		0.750	0.075	0.750	-0.025	0.900	0.027
		0.870	0.065	0.890	0.110	0.960	-0.032
		0.930	0.052	0.930	0.091		
		0.960	0.015	0.960	-0.795**		

Table H-2. Continued.

Flight 222, Wing sweep = 58°, Time = 11-42-35-000, MINF = 1.405, Camber = 2/0, ALPT = 7.35, BETA = 0.43, QINF = 800.8, RNPU = 5.0E+06

η = 0.93		0.76		0.59		0.40	
			Upper Surface				
x/c	CP	*x/c*	CP	*x/c*	CP	*x/c*	CP
0.020	-0.358	0.000	0.262	0.000	1.301**	0.010	-0.387
0.060	-0.331	0.020	-0.411	0.020	-0.352	0.020	-0.434
0.110	-0.350	0.040	-0.337	0.060	-1.489**	0.060	-0.432
0.200	-0.388	0.060	-0.379	0.090	-0.415	0.110	-0.435
0.230	-0.354	0.090	-0.363	0.110	-0.429	0.140	-0.445
0.400	-0.367	0.130	-0.381	0.130	-0.407	0.190	-0.724**
0.490	-0.346	0.150	-0.395	0.150	-0.411	0.250	-0.297
0.590	-0.175	0.200	-0.383	0.210	-0.422	0.400	-0.202
0.630	-0.146	0.250	-0.418	0.250	-0.407	0.490	-0.234
0.700	-0.139	0.260	-0.399	0.340	-0.308	0.580	-0.123
0.750	-0.132	0.280	-0.406	0.370	-0.265	0.650	-0.131
0.810	-0.119	0.290	-0.406	0.400	-0.234	0.700	-0.117
0.840	-0.115	0.310	-0.394	0.410	-0.156**	0.750	-0.131
0.900	-0.140	0.320	-0.396	0.430	-0.227	0.800	-0.109
0.960	-0.047	0.340	-0.403	0.440	-0.206	0.830	-0.168
		0.350	-0.172**	0.460	-0.202	0.900	-0.037
		0.370	-0.384	0.490	-0.162	0.960	-0.038
		0.380	-0.421	0.500	-0.180		
		0.400	-0.348	0.520	-0.169		
		0.410	-0.403	0.540	-0.156		
		0.430	-0.325	0.550	-0.132		
		0.440	-0.286	0.580	-0.130		
		0.460	-0.260	0.600	-0.145		
		0.470	-0.249	0.610	-0.141		
		0.490	-0.222	0.650	0.793**		
		0.500	-0.216	0.700	-0.166		
		0.520	-0.211	0.750	-0.182		
		0.530	-0.194	0.820	-0.197		
		0.550	-0.203	0.890	-0.238		
		0.560	-0.190	0.900	-0.219		
		0.580	-0.185	0.960	-0.126		
		0.590	-0.187				
		0.600	-0.175				
		0.640	-0.167				
		0.700	-0.181				
		0.750	-0.037**				
		0.820	-0.089				
		0.870	-0.098				
		0.930	-0.108				
		0.960	-0.059				
			Lower Surface				
0.020	0.088	0.020	0.143	0.020	0.170	0.020	0.223
0.110	0.014	0.060	0.126	0.060	0.168	0.060	0.685**
0.230	-0.019	0.090	0.040	0.090	0.423**	0.110	0.038
0.400	-0.038	0.120	0.053	0.120	0.037	0.250	-0.006
0.490	-0.055	0.200	0.044	0.200	0.048	0.400	0.025
0.630	0.696**	0.260	0.012	0.250	0.026	0.490	-0.031
0.750	-0.039	0.400	-0.024	0.400	-0.022	0.580	-0.060
0.850	-0.029	0.490	-0.064	0.490	-0.027	0.650	-0.052
0.900	-0.010	0.580	-0.126	0.580	-0.106	0.750	-0.039
0.960	0.002	0.640	-0.109	0.650	-0.040	0.830	0.004
		0.750	0.064	0.750	-0.027	0.900	0.038
		0.870	0.056	0.890	0.085	0.960	-0.029
		0.930	0.035	0.930	0.067		
		0.960	-0.002	0.960	-0.799**		

Table H-2. Continued.

Flight 222, Wing sweep = 58°, Time = 11-42-36-500, MINF = 1.397, Camber = 3/-1, ALPT = 8.55, BETA = 0.45, QINF = 793.3, RNPU = 4.9E+06

η = 0.93		0.76		0.59		0.40	
			Upper Surface				
x/c	CP	*x/c*	CP	*x/c*	CP	*x/c*	CP
0.020	-0.365	0.000	0.254	0.000	1.312**	0.010	-0.399
0.060	-0.349	0.020	-0.437	0.020	-0.374	0.020	-0.423
0.110	-0.380	0.040	-0.349	0.060	-1.505**	0.060	-0.461
0.200	-0.431	0.060	-0.378	0.090	-0.420	0.110	-0.459
0.230	-0.429	0.090	-0.384	0.110	-0.454	0.140	-0.496
0.400	-0.406	0.130	-0.408	0.130	-0.451	0.190	-0.732**
0.490	-0.384	0.150	-0.434	0.150	-0.457	0.250	-0.322
0.590	-0.256	0.200	-0.428	0.210	-0.466	0.400	-0.242
0.630	-0.205	0.250	-0.461	0.250	-0.454	0.490	-0.340
0.700	-0.182	0.260	-0.442	0.340	-0.335	0.580	-0.145
0.750	-0.166	0.280	-0.450	0.370	-0.328	0.650	-0.141
0.810	-0.146	0.290	-0.447	0.400	-0.305	0.700	-0.127
0.840	-0.139	0.310	-0.438	0.410	-0.159**	0.750	-0.136
0.900	-0.086	0.320	-0.441	0.430	-0.315	0.800	-0.118
0.960	-0.056	0.340	-0.449	0.440	-0.297	0.830	-0.180
		0.350	-0.143**	0.460	-0.300	0.900	-0.041
		0.370	-0.430	0.490	-0.248	0.960	-0.036
		0.380	-0.469	0.500	-0.254		
		0.400	-0.415	0.520	-0.229		
		0.410	-0.384	0.540	-0.190		
		0.430	-0.308	0.550	-0.145		
		0.440	-0.288	0.580	-0.120		
		0.460	-0.301	0.600	-0.149		
		0.470	-0.292	0.610	-0.144		
		0.490	-0.276	0.650	0.800**		
		0.500	-0.279	0.700	-0.192		
		0.520	-0.275	0.750	-0.191		
		0.530	-0.268	0.820	-0.211		
		0.550	-0.278	0.890	-0.273		
		0.560	-0.277	0.900	-0.266		
		0.580	-0.269	0.960	-0.171		
		0.590	-0.273				
		0.600	-0.280				
		0.640	-0.224				
		0.700	-0.234				
		0.750	-0.036**				
		0.820	-0.098				
		0.870	-0.077				
		0.930	-0.115				
		0.960	-0.087				
			Lower Surface				
0.020	0.107	0.020	0.154	0.020	0.194	0.020	0.251
0.110	0.038	0.060	0.147	0.060	0.194	0.060	0.691**
0.230	0.089	0.090	0.062	0.090	0.426**	0.110	0.061
0.400	-0.012	0.120	0.080	0.120	0.043	0.250	0.080
0.490	-0.034	0.200	0.084	0.200	0.085	0.400	0.044
0.630	0.702**	0.260	0.044	0.250	0.043	0.490	-0.012
0.750	-0.035	0.400	-0.001	0.400	-0.006	0.580	-0.045
0.850	-0.034	0.490	-0.050	0.490	-0.028	0.650	-0.034
0.900	-0.009	0.580	-0.108	0.580	-0.086	0.750	-0.022
0.960	-0.007	0.640	-0.093	0.650	-0.036	0.830	0.019
		0.750	0.073	0.750	-0.028	0.900	0.044
		0.870	0.042	0.890	0.079	0.960	-0.028
		0.930	0.029	0.930	0.059		
		0.960	-0.011	0.960	-0.807**		

Table H-2. Continued.

Flight 222, Wing sweep = 58°, Time = 11-42-38-000, MINF = 1.387, Camber = 5/-1, ALPT = 9.32, BETA = 0.45, QINF = 779.3, RNPU = 4.9E+06

η = 0.93		0.76		0.59		0.40	
			Upper Surface				
x/c	CP	*x/c*	CP	*x/c*	CP	*x/c*	CP
0.020	-0.366	0.000	0.254	0.000	1.339**	0.010	-0.410
0.060	-0.351	0.020	-0.404	0.020	-0.381	0.020	-0.442
0.110	-0.377	0.040	-0.348	0.060	-1.529**	0.060	-0.472
0.200	-0.456	0.060	-0.394	0.090	-0.431	0.110	-0.486
0.230	-0.432	0.090	-0.398	0.110	-0.469	0.140	-0.522
0.400	-0.445	0.130	-0.423	0.130	-0.478	0.190	-0.743**
0.490	-0.405	0.150	-0.457	0.150	-0.488	0.250	-0.347
0.590	-0.271	0.200	-0.458	0.210	-0.495	0.400	-0.263
0.630	-0.223	0.250	-0.498	0.250	-0.492	0.490	-0.357
0.700	-0.207	0.260	-0.473	0.340	-0.373	0.580	-0.195
0.750	-0.193	0.280	-0.481	0.370	-0.367	0.650	-0.151
0.810	-0.169	0.290	-0.475	0.400	-0.370	0.700	-0.128
0.840	-0.161	0.310	-0.467	0.410	-0.159**	0.750	-0.135
0.900	-0.102	0.320	-0.468	0.430	-0.399	0.800	-0.119
0.960	-0.088	0.340	-0.478	0.440	-0.377	0.830	-0.179
		0.350	-0.134**	0.460	-0.383	0.900	-0.042
		0.370	-0.457	0.490	-0.339	0.960	-0.037
		0.380	-0.424	0.500	-0.337		
		0.400	-0.324	0.520	-0.281		
		0.410	-0.351	0.540	-0.183		
		0.430	-0.330	0.550	-0.128		
		0.440	-0.309	0.580	-0.105		
		0.460	-0.332	0.600	-0.163		
		0.470	-0.328	0.610	-0.165		
		0.490	-0.313	0.650	0.817**		
		0.500	-0.318	0.700	-0.210		
		0.520	-0.331	0.750	-0.214		
		0.530	-0.315	0.820	-0.241		
		0.550	-0.311	0.890	-0.275		
		0.560	-0.319	0.900	-0.305		
		0.580	-0.318	0.960	-0.200		
		0.590	-0.322				
		0.600	-0.315				
		0.640	-0.279				
		0.700	-0.297				
		0.750	-0.037**				
		0.820	-0.155				
		0.870	-0.147				
		0.930	-0.074				
		0.960	-0.065				
			Lower Surface				
0.020	0.126	0.020	0.156	0.020	0.195	0.020	0.254
0.110	0.056	0.060	0.162	0.060	0.205	0.060	0.706**
0.230	0.104	0.090	0.083	0.090	0.436**	0.110	0.059
0.400	-0.003	0.120	0.097	0.120	0.064	0.250	0.101
0.490	-0.009	0.200	0.110	0.200	0.099	0.400	0.054
0.630	0.717**	0.260	0.061	0.250	0.059	0.490	0.001
0.750	-0.036	0.400	0.007	0.400	0.013	0.580	-0.033
0.850	-0.034	0.490	-0.033	0.490	-0.032	0.650	-0.020
0.900	-0.002	0.580	-0.102	0.580	-0.077	0.750	-0.015
0.960	-0.018	0.640	-0.092	0.650	-0.040	0.830	0.029
		0.750	0.071	0.750	-0.037	0.900	0.051
		0.870	0.027	0.890	0.085	0.960	-0.023
		0.930	0.026	0.930	0.057		
		0.960	-0.012	0.960	-0.819**		

Table H-2. Concluded.

Flight 222, Wing sweep = 58°, Time = 11-42-40-000, MINF = 1.369, Camber = 5/-1, ALPT = 9.50, BETA = 0.48, QINF = 750.7, RNPU = 4.7E+06

η = 0.93		0.76		0.59		0.40	
			Upper Surface				
x/c	CP	*x/c*	CP	*x/c*	CP	*x/c*	CP
0.020	-0.355	0.000	0.246	0.000	1.398**	0.010	-0.412
0.060	-0.314	0.020	-0.399	0.020	-0.380	0.020	-0.460
0.110	-0.396	0.040	-0.353	0.060	-1.579**	0.060	-0.491
0.200	-0.482	0.060	-0.388	0.090	-0.449	0.110	-0.514
0.230	-0.458	0.090	-0.407	0.110	-0.492	0.140	-0.552
0.400	-0.462	0.130	-0.441	0.130	-0.491	0.190	-0.763**
0.490	-0.330	0.150	-0.479	0.150	-0.492	0.250	-0.364
0.590	-0.281	0.200	-0.477	0.210	-0.518	0.400	-0.265
0.630	-0.232	0.250	-0.520	0.250	-0.434	0.490	-0.357
0.700	-0.227	0.260	-0.492	0.340	-0.390	0.580	-0.202
0.750	-0.210	0.280	-0.506	0.370	-0.397	0.650	-0.162
0.810	-0.181	0.290	-0.502	0.400	-0.385	0.700	-0.133
0.840	-0.180	0.310	-0.488	0.410	-0.157**	0.750	-0.147
0.900	-0.124	0.320	-0.491	0.430	-0.418	0.800	-0.130
0.960	-0.103	0.340	-0.462	0.440	-0.403	0.830	-0.188
		0.350	-0.125**	0.460	-0.410	0.900	-0.036
		0.370	-0.354	0.490	-0.353	0.960	-0.048
		0.380	-0.375	0.500	-0.320		
		0.400	-0.320	0.520	-0.241		
		0.410	-0.356	0.540	-0.158		
		0.430	-0.347	0.550	-0.135		
		0.440	-0.322	0.580	-0.153		
		0.460	-0.349	0.600	-0.178		
		0.470	-0.345	0.610	-0.175		
		0.490	-0.339	0.650	0.856**		
		0.500	-0.342	0.700	-0.220		
		0.520	-0.344	0.750	-0.239		
		0.530	-0.337	0.820	-0.300		
		0.550	-0.332	0.890	-0.286		
		0.560	-0.339	0.900	-0.307		
		0.580	-0.342	0.960	-0.192		
		0.590	-0.349				
		0.600	-0.344				
		0.640	-0.309				
		0.700	-0.335				
		0.750	-0.034**				
		0.820	-0.204				
		0.870	-0.157				
		0.930	-0.065				
		0.960	-0.056				
			Lower Surface				
0.020	0.105	0.020	0.135	0.020	0.180	0.020	0.243
0.110	0.055	0.060	0.161	0.060	0.187	0.060	0.741**
0.230	0.098	0.090	0.076	0.090	0.461**	0.110	0.035
0.400	-0.015	0.120	0.087	0.120	0.050	0.250	0.085
0.490	-0.034	0.200	0.106	0.200	0.100	0.400	0.054
0.630	0.753**	0.260	0.066	0.250	0.067	0.490	0.000
0.750	-0.044	0.400	0.004	0.400	0.006	0.580	-0.026
0.850	-0.029	0.490	-0.043	0.490	-0.025	0.650	-0.022
0.900	-0.016	0.580	-0.086	0.580	-0.064	0.750	-0.019
0.960	-0.026	0.640	-0.112	0.650	-0.039	0.830	0.019
		0.750	0.061	0.750	-0.030	0.900	0.054
		0.870	0.045	0.890	0.079	0.960	-0.035
		0.930	0.018	0.930	0.052		
		0.960	0.006	0.960	-0.842**		

APPENDIX I

Wing Pressure Coefficients for Dynamic Pressures From 80 to 300 lb/ft^2 and Mach Numbers From 0.28 to 0.59.

Leading-edge wing sweep is 26° unless otherwise indicated at flight number. Table I-1 contains a summary of the data listing in table I-2. The asterisks (*) in table I-2 indicate invalid values. Camber is $\delta_{LE/TE}$. Refer to Nomenclature for definitions.

Table I-1. Summary of data.

Flight	Time	MINF	Camber	ALPT	BETA	QINF	RNPU	CNWP
216	9-1-1-000	0.499	0/2	6.00	0.37	299.9	3.6E+06	0.2065
216	9-1-30-000	0.500	0/2	6.30	0.34	300.8	3.6E+06	0.2135
216	9-1-47-000	0.496	0/2	7.06	-0.41	295.1	3.6E+06	0.2285
216	9-2-1-500	0.500	0/2	8.07	0.25	297.4	3.6E+06	0.2661
216	9-3-38-000	0.497	0/2	3.98	0.48	293.0	3.5E+06	0.1361
216	9-5-50-500	0.502	10/2	6.22	0.45	304.1	3.6E+06	0.2446
216	9-6-12-000	0.500	10/2	8.02	0.95	302.4	3.6E+06	0.3026
216	9-7-33-500	0.505	10/2	3.44	0.66	303.3	3.6E+06	0.1656
216	9-10-16-500	0.499	10/10	4.02	0.37	299.6	3.6E+06	0.3256
216	9-10-54-000	0.497	10/11	4.06	-0.04	297.6	3.6E+06	0.3149
216	9-11-16-000	0.507	10/10	8.00	0.05	307.2	3.6E+06	0.4295
216	9-11-52-500	0.498	10/10	3.13	0.57	298.6	3.6E+06	0.2945
192	10-44-34-000	0.506	5/10	11.09	0.05	123.6	1.5E+06	0.5703
192	10-51-35-500	0.508	0/10	12.22	0.76	134.1	1.6E+06	0.3622
192	11-13-15-500	0.497	10/16	10.03	-0.72	118.0	1.4E+06	0.5683
201[1]	9-54-1-000	0.519	15/10	3.93	0.83	276.0	3.2E+06	0.3442
201[1]	9-54-22-000	0.508	15/10	4.00	0.86	273.4	3.2E+06	0.3278
201[1]	9-55-2-500	0.407	20/18	4.05	1.12	189.8	2.7E+06	0.4625
201[1]	9-55-27-000	0.368	20/17	5.12	0.89	161.9	2.6E+06	0.4656
201[1]	9-55-44-500	0.345	20/17	6.02	0.63	145.7	2.4E+06	0.5411
201[1]	9-56-4-500	0.315	20/18	7.26	0.66	124.2	2.3E+06	0.6770
201[1]	9-56-37-500	0.289	20/17	7.93	0.89	107.3	2.1E+06	0.7357
201[1]	9-57-0-000	0.279	20/17	9.10	0.95	101.4	2.1E+06	0.8558
201[1]	9-58-22-500	0.268	20/17	9.90	1.32	97.7	2.1E+06	0.9262
201[1]	9-52-31-000	0.592	15/10	3.01	0.89	309.7	3.2E+06	0.2814
201[1]	9-54-25-500	0.496	15/9	4.02	1.21	262.9	3.2E+06	0.3380
201[1]	9-54-29-500	0.484	15/10	5.03	0.86	251.8	3.1E+06	0.3694
201[1]	9-55-45-500	0.344	20/17	6.03	0.63	144.5	2.4E+06	0.5245

[1]Wing sweep of 9° [2]Wing sweep of 16°

Table I-1. Concluded.

Flight	Time	MINF	Camber	ALPT	BETA	QINF	RNPU	CNWP
201[1]	9-56-19-500	0.289	20/18	8.02	0.74	105.5	2.1E+06	0.6455
201[1]	9-56-58-000	0.280	20/18	8.98	1.35	101.7	2.1E+06	0.8802
222[2]	12-20-11-500	0.306	20/18	10.03	1.03	95.6	1.8E+06	0.6852
222[2]	12-20-15-000	0.304	20/18	9.97	0.72	94.6	1.8E+06	0.6993
222[2]	12-21-25-000	0.295	20/18	10.05	1.21	89.3	1.7E+06	0.6392
222[2]	12-22-23-000	0.285	20/18	11.58	0.83	83.3	1.7E+06	0.7351

[1]Wing sweep of 9° [2]Wing sweep of 16°

Table I-2. Listing of data.

Flight 216, Wing sweep = 26°, Time = 9-1-1-000, MINF = 0.499, Camber = 0/2, ALPT = 6.00, BETA = 0.37, QINF = 299.9, RNPU = 3.6E+06, CNWP = 0.2065

η = 0.93		0.76		0.59		0.40	
			Upper Surface				
x/c	CP	*x/c*	CP	*x/c*	CP	*x/c*	CP
0.020	-0.461	0.000	0.629	0.000	0.393**	0.010	-1.496
0.060	-0.308	0.020	-0.821	0.020	-1.050	0.020	-1.047
0.110	-0.286	0.040	-0.515	0.060	-0.356**	0.060	-0.791
0.200	-0.244	0.060	-0.546	0.090	-0.535	0.110	-0.595
0.230	-0.270	0.090	-0.422	0.110	-0.510	0.140	-0.566
0.400	-0.210	0.130	-0.414	0.130	-5.742**	0.190	-5.742**
0.490	-0.189	0.150	-0.379	0.150	-0.452	0.250	-0.450
0.590	-0.214	0.200	-0.361	0.210	-0.467	0.400	-0.385
0.630	-0.214	0.250	-0.331	0.250	-0.408	0.490	-0.312
0.700	-0.229	0.260	-0.335	0.340	-0.382	0.580	-0.291
0.750	-0.221	0.280	-0.329	0.370	-0.369	0.650	-0.347
0.810	-0.190	0.290	-0.320	0.400	-0.312	0.700	-0.305
0.840	-0.218	0.310	-0.306	0.410	-1.240**	0.750	-0.315
0.900	-0.150	0.320	-0.327	0.430	-0.346	0.800	-0.289
0.960	-0.041	0.340	-0.310	0.440	-0.332	0.830	-0.279
		0.350	-0.156**	0.460	-0.326	0.900	-0.192
		0.370	-0.303	0.490	-0.310	0.960	-0.036
		0.380	-0.315	0.500	-0.311		
		0.400	-0.279	0.520	-0.335		
		0.410	-0.288	0.540	-0.314		
		0.430	-0.266	0.550	-0.294		
		0.440	-0.264	0.580	-0.300		
		0.460	-0.257	0.600	-0.305		
		0.470	-0.300	0.610	-0.302		
		0.490	-0.290	0.650	-0.383		
		0.500	-0.288	0.700	-0.321		
		0.520	-0.258	0.750	-0.306		
		0.530	-0.268	0.820	-0.293		
		0.550	-0.294	0.890	-0.150		
		0.560	-0.304	0.900	-0.133		
		0.580	-0.259	0.960	-0.011		
		0.590	-0.281				
		0.600	-0.267				
		0.640	-0.302				
		0.700	-0.284				
		0.750	-0.072**				
		0.820	-0.257				
		0.870	-0.218				
		0.930	-0.112				
		0.960	-0.054				
			Lower Surface				
0.020	0.006	0.020	0.151	0.020	0.255	0.020	0.569
0.110	-0.093	0.060	0.085	0.060	0.168	0.060	-0.032
0.230	-0.007	0.090	0.059	0.090	0.096	0.110	0.131
0.400	-0.054	0.120	0.001	0.120	-0.040	0.250	-0.109
0.490	-0.031	0.200	-0.013	0.200	0.042	0.400	-0.109
0.630	0.787**	0.260	-0.063	0.250	-0.080	0.490	-0.121
0.750	-0.007	0.400	-0.069	0.400	-0.084	0.580	-0.152
0.850	0.029	0.490	-0.092	0.490	-0.074	0.650	-0.075
0.900	0.122	0.580	-0.116	0.580	-0.133	0.750	0.125
0.960	0.103	0.640	0.020	0.650	-0.080	0.830	0.228
		0.750	0.129	0.750	-0.038	0.900	0.264
		0.870	0.208	0.890	0.251	0.960	0.213
		0.930	0.168	0.930	0.199		
		0.960	0.125	0.960	0.203		
CN =	0.196		0.322		0.322		0.389

Table I-2. Continued.

Flight 216, Wing sweep = 26°, Time = 9-1-30-000, MINF = 0.500, Camber = 0/2, ALPT = 6.30, BETA = 0.34, QINF = 300.8, RNPU = 3.6E+06, CNWP = 0.2135

η = 0.93		0.76		0.59		0.40	
			Upper Surface				
x/c	CP	*x/c*	CP	*x/c*	CP	*x/c*	CP
0.020	-0.513	0.000	0.580	0.000	0.346**	0.010	-1.583
0.060	-0.342	0.020	-0.910	0.020	-1.153	0.020	-1.124
0.110	-0.317	0.040	-0.557	0.060	-0.405**	0.060	-0.807
0.200	-0.253	0.060	-0.602	0.090	-0.577	0.110	-0.629
0.230	-0.266	0.090	-0.444	0.110	-0.533	0.140	-0.580
0.400	-0.228	0.130	-0.449	0.130	-5.721**	0.190	-5.721**
0.490	-0.194	0.150	-0.400	0.150	-0.487	0.250	-0.474
0.590	-0.207	0.200	-0.374	0.210	-0.481	0.400	-0.388
0.630	-0.218	0.250	-0.354	0.250	-0.419	0.490	-0.313
0.700	-0.229	0.260	-0.352	0.340	-0.379	0.580	-0.298
0.750	-0.236	0.280	-0.343	0.370	-0.381	0.650	-0.349
0.810	-0.201	0.290	-0.334	0.400	-0.337	0.700	-0.312
0.840	-0.219	0.310	-0.319	0.410	-1.233**	0.750	-0.325
0.900	-0.144	0.320	-0.350	0.430	-0.358	0.800	-0.289
0.960	-0.038	0.340	-0.320	0.440	-0.338	0.830	-0.276
		0.350	-0.153**	0.460	-0.333	0.900	-0.189
		0.370	-0.310	0.490	-0.321	0.960	-0.025
		0.380	-0.339	0.500	-0.326		
		0.400	-0.286	0.520	-0.345		
		0.410	-0.312	0.540	-0.324		
		0.430	-0.274	0.550	-0.303		
		0.440	-0.284	0.580	-0.296		
		0.460	-0.266	0.600	-0.314		
		0.470	-0.290	0.610	-0.326		
		0.490	-0.305	0.650	-0.392		
		0.500	-0.290	0.700	-0.329		
		0.520	-0.263	0.750	-0.306		
		0.530	-0.289	0.820	-0.290		
		0.550	-0.300	0.890	-0.151		
		0.560	-0.321	0.900	-0.130		
		0.580	-0.255	0.960	-0.019		
		0.590	-0.282				
		0.600	-0.273				
		0.640	-0.305				
		0.700	-0.288				
		0.750	-0.063**				
		0.820	-0.258				
		0.870	-0.222				
		0.930	-0.101				
		0.960	-0.055				
			Lower Surface				
0.020	0.049	0.020	0.188	0.020	0.287	0.020	0.581
0.110	-0.077	0.060	0.136	0.060	0.196	0.060	-0.029
0.230	0.003	0.090	0.079	0.090	0.108	0.110	0.153
0.400	-0.051	0.120	-0.014	0.120	-0.020	0.250	-0.110
0.490	-0.028	0.200	0.001	0.200	0.052	0.400	-0.099
0.630	0.789**	0.260	-0.053	0.250	-0.066	0.490	-0.111
0.750	0.011	0.400	-0.055	0.400	-0.082	0.580	-0.144
0.850	0.028	0.490	-0.081	0.490	-0.085	0.650	-0.086
0.900	0.107	0.580	-0.106	0.580	-0.123	0.750	0.127
0.960	0.101	0.640	0.013	0.650	-0.064	0.830	0.230
		0.750	0.131	0.750	-0.049	0.900	0.271
		0.870	0.192	0.890	0.260	0.960	0.215
		0.930	0.156	0.930	0.187		
		0.960	0.119	0.960	0.197		
CN =	0.210		0.340		0.338		0.404

Table I-2. Continued.

Flight 216, Wing sweep = 26°, Time = 9-1-47-000, MINF = 0.496, Camber = 0/2, ALPT = 7.06, BETA = -0.41, QINF = 295.1, RNPU = 3.6E+06, CNWP = 0.2285

η = 0.93		0.76		0.59		0.40	
			Upper Surface				
x/c	CP	*x/c*	CP	*x/c*	CP	*x/c*	CP
0.020	-0.639	0.000	0.429	0.000	0.277**	0.010	-2.050
0.060	-0.356	0.020	-1.113	0.020	-1.353	0.020	-1.228
0.110	-0.333	0.040	-0.669	0.060	-0.499**	0.060	-0.905
0.200	-0.282	0.060	-0.674	0.090	-0.618	0.110	-0.673
0.230	-0.302	0.090	-0.494	0.110	-0.587	0.140	-0.606
0.400	-0.224	0.130	-0.481	0.130	-5.801**	0.190	-5.801**
0.490	-0.209	0.150	-0.442	0.150	-0.520	0.250	-0.495
0.590	-0.238	0.200	-0.414	0.210	-0.516	0.400	-0.422
0.630	-0.242	0.250	-0.385	0.250	-0.447	0.490	-0.331
0.700	-0.239	0.260	-0.384	0.340	-0.414	0.580	-0.316
0.750	-0.236	0.280	-0.379	0.370	-0.416	0.650	-0.363
0.810	-0.217	0.290	-0.356	0.400	-0.334	0.700	-0.330
0.840	-0.217	0.310	-0.356	0.410	-1.226**	0.750	-0.329
0.900	-0.165	0.320	-0.359	0.430	-0.377	0.800	-0.278
0.960	-0.065	0.340	-0.338	0.440	-0.353	0.830	-0.269
		0.350	-0.159**	0.460	-0.343	0.900	-0.181
		0.370	-0.343	0.490	-0.325	0.960	-0.023
		0.380	-0.339	0.500	-0.330		
		0.400	-0.301	0.520	-0.352		
		0.410	-0.328	0.540	-0.328		
		0.430	-0.302	0.550	-0.321		
		0.440	-0.286	0.580	-0.314		
		0.460	-0.281	0.600	-0.330		
		0.470	-0.313	0.610	-0.315		
		0.490	-0.306	0.650	-0.454		
		0.500	-0.288	0.700	-0.355		
		0.520	-0.281	0.750	-0.313		
		0.530	-0.289	0.820	-0.302		
		0.550	-0.303	0.890	-0.152		
		0.560	-0.331	0.900	-0.130		
		0.580	-0.272	0.960	-0.002		
		0.590	-0.317				
		0.600	-0.286				
		0.640	-0.330				
		0.700	-0.313				
		0.750	-0.065**				
		0.820	-0.268				
		0.870	-0.228				
		0.930	-0.108				
		0.960	-0.049				
			Lower Surface				
0.020	0.124	0.020	0.265	0.020	0.368	0.020	0.622
0.110	-0.049	0.060	0.190	0.060	0.249	0.060	-0.041
0.230	0.025	0.090	0.130	0.090	0.164	0.110	0.200
0.400	-0.020	0.120	0.028	0.120	0.011	0.250	-0.056
0.490	-0.018	0.200	0.032	0.200	0.069	0.400	-0.069
0.630	0.845**	0.260	-0.026	0.250	-0.039	0.490	-0.084
0.750	0.002	0.400	-0.035	0.400	-0.056	0.580	-0.124
0.850	0.031	0.490	-0.075	0.490	-0.063	0.650	-0.049
0.900	0.106	0.580	-0.086	0.580	-0.115	0.750	0.128
0.960	0.101	0.640	0.041	0.650	-0.063	0.830	0.237
		0.750	0.145	0.750	-0.033	0.900	0.273
		0.870	0.207	0.890	0.253	0.960	0.215
		0.930	0.172	0.930	0.208		
		0.960	0.128	0.960	0.169		
CN =	0.237		0.388		0.375		0.448

Table I-2. Continued.

Flight 216, Wing sweep = 26°, Time = 9-2-1-500, MINF = 0.500, Camber = 0/2, ALPT = 8.07, BETA = 0.25, QINF = 297.4, RNPU = 3.6E+06, CNWP = 0.2661

η = 0.93		0.76		0.59		0.40	
			Upper Surface				
x/c	CP	*x/c*	CP	*x/c*	CP	*x/c*	CP
0.020	-0.927	0.000	0.050	0.000	-0.024**	0.010	-2.959
0.060	-0.525	0.020	-1.531	0.020	-1.858	0.020	-1.472
0.110	-0.424	0.040	-0.097	0.060	-0.575**	0.060	-1.058
0.200	-0.331	0.060	-0.828	0.090	-0.751	0.110	-0.774
0.230	-0.380	0.090	-0.631	0.110	-0.702	0.140	-0.711
0.400	-0.275	0.130	-0.588	0.130	-5.715**	0.190	-5.715**
0.490	-0.243	0.150	-0.534	0.150	-0.579	0.250	-0.535
0.590	-0.251	0.200	-0.492	0.210	-0.598	0.400	-0.441
0.630	-0.251	0.250	-0.433	0.250	-0.518	0.490	-0.349
0.700	-0.262	0.260	-0.438	0.340	-0.472	0.580	-0.316
0.750	-0.255	0.280	-0.425	0.370	-0.448	0.650	-0.362
0.810	-0.239	0.290	-0.407	0.400	-0.385	0.700	-0.325
0.840	-0.254	0.310	-0.392	0.410	-1.176**	0.750	-0.314
0.900	-0.185	0.320	-0.407	0.430	-0.414	0.800	-0.263
0.960	-0.080	0.340	-0.392	0.440	-0.393	0.830	-0.260
		0.350	-0.186**	0.460	-0.384	0.900	-0.145
		0.370	-0.375	0.490	-0.369	0.960	-0.024
		0.380	-0.384	0.500	-0.367		
		0.400	-0.333	0.520	-0.385		
		0.410	-0.356	0.540	-0.354		
		0.430	-0.322	0.550	-0.343		
		0.440	-0.322	0.580	-0.334		
		0.460	-0.328	0.600	-0.367		
		0.470	-0.345	0.610	-0.341		
		0.490	-0.337	0.650	-0.446		
		0.500	-0.336	0.700	-0.350		
		0.520	-0.312	0.750	-0.323		
		0.530	-0.331	0.820	-0.301		
		0.550	-0.339	0.890	-0.166		
		0.560	-0.341	0.900	-0.131		
		0.580	-0.312	0.960	-0.004		
		0.590	-0.338				
		0.600	-0.310				
		0.640	-0.348				
		0.700	-0.316				
		0.750	-0.059**				
		0.820	-0.279				
		0.870	-0.238				
		0.930	-0.116				
		0.960	-0.062				
			Lower Surface				
0.020	0.257	0.020	0.424	0.020	0.511	0.020	0.711
0.110	0.003	0.060	0.282	0.060	0.346	0.060	-0.042
0.230	0.054	0.090	0.190	0.090	0.251	0.110	0.299
0.400	-0.025	0.120	0.100	0.120	0.110	0.250	-0.017
0.490	-0.005	0.200	0.082	0.200	0.128	0.400	-0.041
0.630	0.896**	0.260	0.020	0.250	0.008	0.490	-0.054
0.750	-0.003	0.400	-0.013	0.400	-0.032	0.580	-0.105
0.850	0.018	0.490	-0.043	0.490	-0.068	0.650	-0.049
0.900	0.107	0.580	-0.075	0.580	-0.101	0.750	0.135
0.960	0.087	0.640	0.043	0.650	-0.050	0.830	0.238
		0.750	0.142	0.750	-0.034	0.900	0.275
		0.870	0.195	0.890	0.264	0.960	0.209
		0.930	0.173	0.930	0.204		
		0.960	0.125	0.960	0.176		
CN =	0.293		0.448		0.441		0.501

Table I-2. Continued.

Flight 216, Wing sweep = 26°, Time = 9-3-38-000, MINF = 0.497, Camber = 0/2, ALPT = 3.98, BETA = 0.48, QINF = 293.0, RNPU = 3.5E+06, CNWP = 0.1361

η = 0.93		0.76		0.59		0.40	
			Upper Surface				
x/c	CP	*x/c*	CP	*x/c*	CP	*x/c*	CP
0.020	-0.075	0.000	0.803	0.000	0.707**	0.010	-0.804
0.060	-0.125	0.020	-0.270	0.020	-0.466	0.020	-0.592
0.110	-0.162	0.040	-0.188	0.060	-0.144**	0.060	-0.500
0.200	-0.171	0.060	-0.301	0.090	-0.329	0.110	-0.419
0.230	-0.183	0.090	-0.240	0.110	-0.309	0.140	-0.408
0.400	-0.165	0.130	-0.261	0.130	-5.788**	0.190	-5.788**
0.490	-0.160	0.150	-0.254	0.150	-0.310	0.250	-0.372
0.590	-0.190	0.200	-0.247	0.210	-0.337	0.400	-0.319
0.630	-0.190	0.250	-0.233	0.250	-0.309	0.490	-0.263
0.700	-0.210	0.260	-0.248	0.340	-0.302	0.580	-0.256
0.750	-0.210	0.280	-0.241	0.370	-0.301	0.650	-0.320
0.810	-0.173	0.290	-0.249	0.400	-0.254	0.700	-0.281
0.840	-0.204	0.310	-0.236	0.410	-1.180**	0.750	-0.296
0.900	-0.133	0.320	-0.255	0.430	-0.289	0.800	-0.281
0.960	-0.027	0.340	-0.238	0.440	-0.277	0.830	-0.269
		0.350	-0.138**	0.460	-0.271	0.900	-0.208
		0.370	-0.242	0.490	-0.258	0.960	-0.011
		0.380	-0.254	0.500	-0.272		
		0.400	-0.218	0.520	-0.276		
		0.410	-0.237	0.540	-0.263		
		0.430	-0.212	0.550	-0.249		
		0.440	-0.212	0.580	-0.246		
		0.460	-0.214	0.600	-0.274		
		0.470	-0.245	0.610	-0.265		
		0.490	-0.239	0.650	-0.360		
		0.500	-0.239	0.700	-0.291		
		0.520	-0.220	0.750	-0.279		
		0.530	-0.234	0.820	-0.272		
		0.550	-0.256	0.890	-0.144		
		0.560	-0.253	0.900	-0.125		
		0.580	-0.214	0.960	-0.011		
		0.590	-0.262				
		0.600	-0.234				
		0.640	-0.269				
		0.700	-0.261				
		0.750	-0.070**				
		0.820	-0.240				
		0.870	-0.204				
		0.930	-0.103				
		0.960	-0.058				
			Lower Surface				
0.020	-0.288	0.020	-0.222	0.020	-0.069	0.020	0.272
0.110	-0.201	0.060	-0.082	0.060	-0.027	0.060	-0.043
0.230	-0.076	0.090	-0.105	0.090	-0.060	0.110	-0.043
0.400	-0.085	0.120	-0.144	0.120	-0.175	0.250	-0.207
0.490	-0.057	0.200	-0.099	0.200	-0.074	0.400	-0.175
0.630	0.946**	0.260	-0.150	0.250	-0.182	0.490	-0.177
0.750	-0.006	0.400	-0.124	0.400	-0.158	0.580	-0.203
0.850	0.035	0.490	-0.136	0.490	-0.087	0.650	-0.111
0.900	0.130	0.580	-0.150	0.580	-0.173	0.750	0.107
0.960	0.120	0.640	-0.006	0.650	-0.079	0.830	0.205
		0.750	0.113	0.750	-0.050	0.900	0.253
		0.870	0.183	0.890	0.246	0.960	0.201
		0.930	0.161	0.930	0.185		
		0.960	0.117	0.960	0.213		
CN =	0.115		0.191		0.201		0.257

Table I-2. Continued.

Flight 216, Wing sweep = 26°, Time = 9-5-50-500, MINF = 0.502, Camber = 10/2, ALPT = 6.22, BETA = 0.45, QINF = 304.1, RNPU = 3.6E+06, CNWP = 0.2446

η = 0.93		0.76		0.59		0.40	
			Upper Surface				
x/c	CP	*x/c*	CP	*x/c*	CP	*x/c*	CP
0.020	0.362	0.000	0.261	0.000	0.692**	0.010	-0.166
0.060	-0.137	0.020	0.237	0.020	0.081	0.020	-0.313
0.110	-0.418	0.040	-0.001	0.060	-0.258**	0.060	-0.801
0.200	-0.413	0.060	-0.371	0.090	-0.697	0.110	-1.050
0.230	-0.375	0.090	-0.560	0.110	-0.841	0.140	-0.804
0.400	-0.237	0.130	-0.755	0.130	-5.675**	0.190	-5.675**
0.490	-0.208	0.150	-0.793	0.150	-0.711	0.250	-0.513
0.590	-0.211	0.200	-0.618	0.210	-0.615	0.400	-0.414
0.630	-0.229	0.250	-0.427	0.250	-0.489	0.490	-0.326
0.700	-0.244	0.260	-0.425	0.340	-0.421	0.580	-0.307
0.750	-0.233	0.280	-0.410	0.370	-0.418	0.650	-0.357
0.810	-0.216	0.290	-0.393	0.400	-0.358	0.700	-0.321
0.840	-0.230	0.310	-0.374	0.410	-1.236**	0.750	-0.324
0.900	-0.160	0.320	-0.397	0.430	-0.386	0.800	-0.288
0.960	-0.040	0.340	-0.366	0.440	-0.358	0.830	-0.284
		0.350	-0.175**	0.460	-0.354	0.900	-0.198
		0.370	-0.356	0.490	-0.335	0.960	-0.035
		0.380	-0.361	0.500	-0.343		
		0.400	-0.318	0.520	-0.363		
		0.410	-0.332	0.540	-0.336		
		0.430	-0.307	0.550	-0.314		
		0.440	-0.288	0.580	-0.313		
		0.460	-0.301	0.600	-0.337		
		0.470	-0.321	0.610	-0.324		
		0.490	-0.318	0.650	-0.390		
		0.500	-0.316	0.700	-0.338		
		0.520	-0.293	0.750	-0.316		
		0.530	-0.299	0.820	-0.301		
		0.550	-0.317	0.890	-0.164		
		0.560	-0.324	0.900	-0.141		
		0.580	-0.275	0.960	-0.017		
		0.590	-0.316				
		0.600	-0.292				
		0.640	-0.321				
		0.700	-0.302				
		0.750	-0.064**				
		0.820	-0.272				
		0.870	-0.233				
		0.930	-0.124				
		0.960	-0.064				
			Lower Surface				
0.020	-0.446	0.020	-0.386	0.020	-0.271	0.020	-0.160
0.110	-0.085	0.060	-0.005	0.060	0.023	0.060	-0.031
0.230	-0.040	0.090	-0.005	0.090	0.045	0.110	0.030
0.400	-0.031	0.120	0.037	0.120	0.003	0.250	-0.065
0.490	-0.023	0.200	-0.049	0.200	-0.031	0.400	-0.093
0.630	0.844**	0.260	0.016	0.250	-0.028	0.490	-0.115
0.750	-0.006	0.400	-0.035	0.400	-0.073	0.580	-0.145
0.850	0.025	0.490	-0.071	0.490	-0.073	0.650	-0.074
0.900	0.112	0.580	-0.103	0.580	-0.124	0.750	0.124
0.960	0.098	0.640	0.024	0.650	-0.065	0.830	0.217
		0.750	0.128	0.750	-0.037	0.900	0.260
		0.870	0.187	0.890	0.255	0.960	0.204
		0.930	0.173	0.930	0.189		
		0.960	0.119	0.960	0.224		
CN =	0.224		0.356		0.372		0.416

Table I-2. Continued.

Flight 216, Wing sweep = 26°, Time = 9-6-12-000, MINF = 0.500, Camber = 10/2, ALPT = 8.02, BETA = 0.95, QINF = 302.4, RNPU = 3.6E+06, CNWP = 0.3026

η = 0.93		0.76		0.59		0.40	
			Upper Surface				
x/c	CP	*x/c*	CP	*x/c*	CP	*x/c*	CP
0.020	0.130	0.000	0.700	0.000	0.796**	0.010	-0.654
0.060	-0.313	0.020	-0.089	0.020	-0.303	0.020	-0.675
0.110	-0.570	0.040	-0.200	0.060	-0.551**	0.060	-1.126
0.200	-0.505	0.060	-0.669	0.090	-0.958	0.110	-1.298
0.230	-0.440	0.090	-0.792	0.110	-1.111	0.140	-0.974
0.400	-0.272	0.130	-0.975	0.130	-5.723**	0.190	-5.723**
0.490	-0.228	0.150	-0.983	0.150	-0.879	0.250	-0.588
0.590	-0.247	0.200	-0.757	0.210	-0.751	0.400	-0.447
0.630	-0.246	0.250	-0.519	0.250	-0.581	0.490	-0.350
0.700	-0.257	0.260	-0.511	0.340	-0.487	0.580	-0.324
0.750	-0.239	0.280	-0.497	0.370	-0.456	0.650	-0.358
0.810	-0.206	0.290	-0.471	0.400	-0.408	0.700	-0.322
0.840	-0.250	0.310	-0.442	0.410	-1.259**	0.750	-0.315
0.900	-0.172	0.320	-0.463	0.430	-0.422	0.800	-0.265
0.960	-0.064	0.340	-0.425	0.440	-0.410	0.830	-0.248
		0.350	-0.197**	0.460	-0.394	0.900	-0.144
		0.370	-0.409	0.490	-0.371	0.960	-0.024
		0.380	-0.416	0.500	-0.381		
		0.400	-0.385	0.520	-0.388		
		0.410	-0.377	0.540	-0.368		
		0.430	-0.344	0.550	-0.342		
		0.440	-0.340	0.580	-0.338		
		0.460	-0.339	0.600	-0.357		
		0.470	-0.370	0.610	-0.342		
		0.490	-0.352	0.650	-0.436		
		0.500	-0.350	0.700	-0.359		
		0.520	-0.322	0.750	-0.325		
		0.530	-0.328	0.820	-0.301		
		0.550	-0.344	0.890	-0.154		
		0.560	-0.352	0.900	-0.131		
		0.580	-0.305	0.960	-0.003		
		0.590	-0.342				
		0.600	-0.317				
		0.640	-0.338				
		0.700	-0.318				
		0.750	-0.057**				
		0.820	-0.274				
		0.870	-0.238				
		0.930	-0.118				
		0.960	-0.060				
			Lower Surface				
0.020	-0.209	0.020	-0.072	0.020	0.047	0.020	0.267
0.110	-0.009	0.060	0.147	0.060	0.204	0.060	-0.020
0.230	0.004	0.090	0.122	0.090	0.171	0.110	0.161
0.400	0.002	0.120	0.121	0.120	0.115	0.250	0.013
0.490	0.003	0.200	-0.016	0.200	0.006	0.400	-0.032
0.630	0.844**	0.260	0.091	0.250	0.059	0.490	-0.053
0.750	0.000	0.400	0.013	0.400	-0.014	0.580	-0.105
0.850	0.021	0.490	-0.023	0.490	-0.063	0.650	-0.041
0.900	0.110	0.580	-0.066	0.580	-0.078	0.750	0.154
0.960	0.089	0.640	0.054	0.650	-0.062	0.830	0.237
		0.750	0.147	0.750	-0.026	0.900	0.272
		0.870	0.199	0.890	0.267	0.960	0.207
		0.930	0.174	0.930	0.208		
		0.960	0.124	0.960	0.204		
CN =	0.298		0.470		0.478		0.522

Table I-2. Continued.

Flight 216, Wing sweep = 26°, Time = 9-7-33-500, MINF = 0.505, Camber = 10/2, ALPT = 3.44, BETA = 0.66, QINF = 303.3, RNPU = 3.6E+06, CNWP = 0.1656

η = 0.93		0.76		0.59		0.40	
			Upper Surface				
x/c	CP	*x/c*	CP	*x/c*	CP	*x/c*	CP
0.020	0.587	0.000	-0.811	0.000	0.331**	0.010	0.312
0.060	0.089	0.020	0.635	0.020	0.518	0.020	0.144
0.110	-0.210	0.040	0.358	0.060	0.022**	0.060	-0.365
0.200	-0.280	0.060	-0.031	0.090	-0.334	0.110	-0.681
0.230	-0.263	0.090	-0.234	0.110	-0.491	0.140	-0.573
0.400	-0.174	0.130	-0.437	0.130	-5.603**	0.190	-5.603**
0.490	-0.165	0.150	-0.507	0.150	-0.459	0.250	-0.372
0.590	-0.184	0.200	-0.392	0.210	-0.402	0.400	-0.314
0.630	-0.192	0.250	-0.273	0.250	-0.335	0.490	-0.258
0.700	-0.207	0.260	-0.279	0.340	-0.307	0.580	-0.253
0.750	-0.211	0.280	-0.269	0.370	-0.299	0.650	-0.314
0.810	-0.170	0.290	-0.269	0.400	-0.253	0.700	-0.277
0.840	-0.197	0.310	-0.251	0.410	-1.152**	0.750	-0.306
0.900	-0.136	0.320	-0.275	0.430	-0.294	0.800	-0.292
0.960	-0.043	0.340	-0.255	0.440	-0.283	0.830	-0.263
		0.350	-0.140**	0.460	-0.269	0.900	-0.217
		0.370	-0.255	0.490	-0.279	0.960	-0.047
		0.380	-0.257	0.500	-0.266		
		0.400	-0.228	0.520	-0.277		
		0.410	-0.243	0.540	-0.294		
		0.430	-0.218	0.550	-0.278		
		0.440	-0.224	0.580	-0.240		
		0.460	-0.215	0.600	-0.274		
		0.470	-0.254	0.610	-0.268		
		0.490	-0.258	0.650	-0.325		
		0.500	-0.243	0.700	-0.288		
		0.520	-0.220	0.750	-0.273		
		0.530	-0.236	0.820	-0.277		
		0.550	-0.251	0.890	-0.144		
		0.560	-0.254	0.900	-0.141		
		0.580	-0.219	0.960	-0.010		
		0.590	-0.243				
		0.600	-0.231				
		0.640	-0.282				
		0.700	-0.259				
		0.750	-0.064**				
		0.820	-0.239				
		0.870	-0.208				
		0.930	-0.099				
		0.960	-0.052				
			Lower Surface				
0.020	-1.253	0.020	-1.020	0.020	-0.822	0.020	-0.918
0.110	-0.219	0.060	-0.332	0.060	-0.231	0.060	-0.027
0.230	-0.077	0.090	-0.214	0.090	-0.158	0.110	-0.226
0.400	-0.042	0.120	-0.117	0.120	-0.162	0.250	-0.198
0.490	-0.041	0.200	-0.084	0.200	-0.060	0.400	-0.190
0.630	0.943**	0.260	-0.094	0.250	-0.140	0.490	-0.193
0.750	-0.006	0.400	-0.113	0.400	-0.171	0.580	-0.211
0.850	0.022	0.490	-0.128	0.490	-0.087	0.650	-0.122
0.900	0.100	0.580	-0.137	0.580	-0.178	0.750	0.077
0.960	0.106	0.640	-0.005	0.650	-0.076	0.830	0.196
		0.750	0.095	0.750	-0.061	0.900	0.241
		0.870	0.164	0.890	0.238	0.960	0.197
		0.930	0.149	0.930	0.179		
		0.960	0.109	0.960	0.181		
CN =	0.124		0.168		0.199		0.228

Table I-2. Continued.

Flight 216, Wing sweep = 26°, Time = 9-10-16-500, MINF = 0.499, Camber = 10/10, ALPT = 4.02, BETA = 0.37, QINF = 299.6, RNPU = 3.6E+06, CNWP = 0.3256

η = 0.93		0.76		0.59		0.40	
			Upper Surface				
x/c	CP	*x/c*	CP	*x/c*	CP	*x/c*	CP
0.020	0.493	0.000	-0.185	0.000	0.594**	0.010	0.115
0.060	0.020	0.020	0.424	0.020	0.306	0.020	-0.035
0.110	-0.378	0.040	0.184	0.060	-0.200**	0.060	-0.515
0.200	-0.400	0.060	-0.206	0.090	-0.536	0.110	-0.877
0.230	-0.353	0.090	-0.433	0.110	-0.691	0.140	-0.730
0.400	-0.277	0.130	-0.649	0.130	-5.742**	0.190	-5.742**
0.490	-0.268	0.150	-0.702	0.150	-0.630	0.250	-0.474
0.590	-0.366	0.200	-0.559	0.210	-0.564	0.400	-0.430
0.630	-0.404	0.250	-0.426	0.250	-0.478	0.490	-0.379
0.700	-0.518	0.260	-0.426	0.340	-0.455	0.580	-0.416
0.750	-0.687	0.280	-0.427	0.370	-0.449	0.650	-0.530
0.810	-0.617	0.290	-0.396	0.400	-0.398	0.700	-0.497
0.840	-0.649	0.310	-0.385	0.410	-1.236**	0.750	-0.646
0.900	-0.318	0.320	-0.409	0.430	-0.449	0.800	-0.685
0.960	-0.108	0.340	-0.407	0.440	-0.430	0.830	-0.697
		0.350	-0.193**	0.460	-0.424	0.900	-0.218
		0.370	-0.392	0.490	-0.428	0.960	-0.086
		0.380	-0.416	0.500	-0.447		
		0.400	-0.389	0.520	-0.471		
		0.410	-0.398	0.540	-0.459		
		0.430	-0.384	0.550	-0.446		
		0.440	-0.377	0.580	-0.411		
		0.460	-0.392	0.600	-0.490		
		0.470	-0.403	0.610	-0.499		
		0.490	-0.403	0.650	-0.639		
		0.500	-0.405	0.700	-0.595		
		0.520	-0.391	0.750	-0.621		
		0.530	-0.410	0.820	-0.730		
		0.550	-0.448	0.890	-0.224		
		0.560	-0.456	0.900	-0.185		
		0.580	-0.433	0.960	-0.059		
		0.590	-0.479				
		0.600	-0.466				
		0.640	-0.590				
		0.700	-0.638				
		0.750	-0.087**				
		0.820	-0.599				
		0.870	-0.427				
		0.930	-0.290				
		0.960	-0.209				
			Lower Surface				
0.020	-0.598	0.020	-0.538	0.020	-0.462	0.020	-0.488
0.110	-0.070	0.060	-0.049	0.060	-0.022	0.060	0.001
0.230	-0.017	0.090	-0.028	0.090	-0.011	0.110	-0.065
0.400	0.020	0.120	0.033	0.120	-0.016	0.250	-0.087
0.490	0.098	0.200	-0.039	0.200	0.002	0.400	-0.056
0.630	0.925**	0.260	0.034	0.250	-0.004	0.490	-0.040
0.750	0.171	0.400	0.038	0.400	-0.012	0.580	-0.011
0.850	0.173	0.490	0.028	0.490	-0.078	0.650	0.107
0.900	0.279	0.580	0.068	0.580	0.023	0.750	0.334
0.960	0.169	0.640	0.242	0.650	-0.091	0.830	0.401
		0.750	0.294	0.750	0.009	0.900	0.454
		0.870	0.384	0.890	0.453	0.960	0.313
		0.930	0.299	0.930	0.350		
		0.960	0.212	0.960	0.294		
CN =	0.420		0.550		0.509		0.547

Table I-2. Continued.

Flight 216, Wing sweep = 26°, Time = 9-10-54-000, MINF = 0.497, Camber = 10/11, ALPT = 4.06, BETA = -0.04, QINF = 297.6, RNPU = 3.6E+06, CNWP = 0.3149

η = 0.93		0.76		0.59		0.40	
			Upper Surface				
x/c	CP	*x/c*	CP	*x/c*	CP	*x/c*	CP
0.020	0.479	0.000	-0.181	0.000	0.553**	0.010	0.109
0.060	-0.046	0.020	0.427	0.020	0.296	0.020	-0.041
0.110	-0.344	0.040	0.169	0.060	-0.180**	0.060	-0.560
0.200	-0.398	0.060	-0.217	0.090	-0.524	0.110	-0.844
0.230	-0.365	0.090	-0.427	0.110	-0.696	0.140	-0.713
0.400	-0.284	0.130	-0.642	0.130	-5.776**	0.190	-5.776**
0.490	-0.272	0.150	-0.690	0.150	-0.621	0.250	-0.487
0.590	-0.360	0.200	-0.566	0.210	-0.564	0.400	-0.436
0.630	-0.402	0.250	-0.424	0.250	-0.477	0.490	-0.381
0.700	-0.531	0.260	-0.424	0.340	-0.454	0.580	-0.414
0.750	-0.695	0.280	-0.417	0.370	-0.437	0.650	-0.543
0.810	-0.623	0.290	-0.399	0.400	-0.396	0.700	-0.495
0.840	-0.670	0.310	-0.390	0.410	-1.240**	0.750	-0.625
0.900	-0.313	0.320	-0.417	0.430	-0.434	0.800	-0.692
0.960	-0.111	0.340	-0.399	0.440	-0.442	0.830	-0.711
		0.350	-0.176**	0.460	-0.430	0.900	-0.229
		0.370	-0.400	0.490	-0.427	0.960	-0.096
		0.380	-0.410	0.500	-0.427		
		0.400	-0.376	0.520	-0.470		
		0.410	-0.393	0.540	-0.443		
		0.430	-0.370	0.550	-0.444		
		0.440	-0.375	0.580	-0.441		
		0.460	-0.390	0.600	-0.474		
		0.470	-0.422	0.610	-0.483		
		0.490	-0.415	0.650	-0.632		
		0.500	-0.412	0.700	-0.612		
		0.520	-0.418	0.750	-0.634		
		0.530	-0.419	0.820	-0.748		
		0.550	-0.437	0.890	-0.223		
		0.560	-0.463	0.900	-0.171		
		0.580	-0.425	0.960	-0.076		
		0.590	-0.487				
		0.600	-0.445				
		0.640	-0.597				
		0.700	-0.651				
		0.750	-0.079**				
		0.820	-0.574				
		0.870	-0.443				
		0.930	-0.328				
		0.960	-0.238				
			Lower Surface				
0.020	-0.588	0.020	-0.555	0.020	-0.459	0.020	-0.494
0.110	-0.083	0.060	-0.049	0.060	-0.031	0.060	0.019
0.230	-0.012	0.090	-0.038	0.090	-0.009	0.110	-0.075
0.400	0.024	0.120	0.038	0.120	-0.020	0.250	-0.075
0.490	0.089	0.200	-0.034	0.200	-0.008	0.400	-0.065
0.630	0.926**	0.260	0.053	0.250	-0.014	0.490	-0.036
0.750	0.166	0.400	0.028	0.400	-0.008	0.580	-0.006
0.850	0.193	0.490	0.037	0.490	-0.074	0.650	0.126
0.900	0.286	0.580	0.055	0.580	0.028	0.750	0.326
0.960	0.171	0.640	0.244	0.650	-0.087	0.830	0.386
		0.750	0.292	0.750	-0.001	0.900	0.442
		0.870	0.391	0.890	0.447	0.960	0.299
		0.930	0.302	0.930	0.357		
		0.960	0.196	0.960	0.298		
CN =	0.425		0.554		0.508		0.551

Table I-2. Continued.

Flight 216, Wing sweep = 26°, Time = 9-11-16-000, MINF = 0.507, Camber = 10/10, ALPT = 8.00, BETA = 0.05, QINF = 307.2, RNPU = 3.6E+06, CNWP = 0.4295

η = 0.93		0.76		0.59		0.40	
			Upper Surface				
x/c	CP	*x/c*	CP	*x/c*	CP	*x/c*	CP
0.020	-0.016	0.000	0.787	0.000	0.779**	0.010	-0.812
0.060	-0.454	0.020	-0.309	0.020	-0.522	0.020	-0.832
0.110	-0.696	0.040	-0.019	0.060	-0.796**	0.060	-1.297
0.200	-0.637	0.060	-0.859	0.090	-1.152	0.110	-1.451
0.230	-0.557	0.090	-0.976	0.110	-1.298	0.140	-1.111
0.400	-0.394	0.130	-1.177	0.130	-5.565**	0.190	-5.565**
0.490	-0.376	0.150	-1.169	0.150	-1.022	0.250	-0.687
0.590	-0.453	0.200	-0.921	0.210	-0.895	0.400	-0.555
0.630	-0.490	0.250	-0.665	0.250	-0.714	0.490	-0.490
0.700	-0.619	0.260	-0.653	0.340	-0.629	0.580	-0.487
0.750	-0.779	0.280	-0.636	0.370	-0.615	0.650	-0.584
0.810	-0.720	0.290	-0.602	0.400	-0.547	0.700	-0.564
0.840	-0.792	0.310	-0.572	0.410	-1.170**	0.750	-0.637
0.900	-0.414	0.320	-0.594	0.430	-0.579	0.800	-0.598
0.960	-0.201	0.340	-0.575	0.440	-0.569	0.830	-0.613
		0.350	-0.236**	0.460	-0.553	0.900	-0.226
		0.370	-0.550	0.490	-0.522	0.960	-0.110
		0.380	-0.568	0.500	-0.547		
		0.400	-0.515	0.520	-0.547		
		0.410	-0.529	0.540	-0.558		
		0.430	-0.502	0.550	-0.531		
		0.440	-0.498	0.580	-0.533		
		0.460	-0.509	0.600	-0.585		
		0.470	-0.536	0.610	-0.583		
		0.490	-0.522	0.650	-0.732		
		0.500	-0.528	0.700	-0.655		
		0.520	-0.495	0.750	-0.663		
		0.530	-0.513	0.820	-0.706		
		0.550	-0.539	0.890	-0.177		
		0.560	-0.562	0.900	-0.161		
		0.580	-0.511	0.960	-0.098		
		0.590	-0.553				
		0.600	-0.543				
		0.640	-0.666				
		0.700	-0.711				
		0.750	-0.070**				
		0.820	-0.669				
		0.870	-0.459				
		0.930	-0.265				
		0.960	-0.196				
			Lower Surface				
0.020	-0.083	0.020	0.091	0.020	0.164	0.020	0.369
0.110	0.048	0.060	0.234	0.060	0.257	0.060	0.023
0.230	0.053	0.090	0.199	0.090	0.234	0.110	0.235
0.400	0.047	0.120	0.190	0.120	0.199	0.250	0.082
0.490	0.088	0.200	0.048	0.200	0.069	0.400	0.039
0.630	0.932**	0.260	0.167	0.250	0.139	0.490	0.062
0.750	0.140	0.400	0.100	0.400	0.091	0.580	0.055
0.850	0.148	0.490	0.100	0.490	-0.034	0.650	0.176
0.900	0.228	0.580	0.104	0.580	0.073	0.750	0.371
0.960	0.128	0.640	0.258	0.650	-0.074	0.830	0.416
		0.750	0.322	0.750	0.017	0.900	0.477
		0.870	0.387	0.890	0.447	0.960	0.321
		0.930	0.295	0.930	0.356		
		0.960	0.203	0.960	0.277		
CN =	0.590		0.800		0.741		0.806

Table I-2. Continued.

Flight 216, Wing sweep = 26°, Time = 9-11-52-500, MINF = 0.498, Camber = 10/10, ALPT = 3.13, BETA = 0.57, QINF = 298.6, RNPU = 3.6E+06, CNWP = 0.2945

η = 0.93		0.76		0.59		0.40	
			Upper Surface				
x/c	CP	*x/c*	CP	*x/c*	CP	*x/c*	CP
0.020	0.555	0.000	-0.589	0.000	0.430**	0.010	0.285
0.060	0.046	0.020	0.542	0.020	0.461	0.020	0.114
0.110	-0.264	0.040	0.302	0.060	-0.127**	0.060	-0.403
0.200	-0.348	0.060	-0.108	0.090	-0.413	0.110	-0.700
0.230	-0.310	0.090	-0.311	0.110	-0.550	0.140	-0.605
0.400	-0.255	0.130	-0.524	0.130	-5.759**	0.190	-5.759**
0.490	-0.251	0.150	-0.598	0.150	-0.528	0.250	-0.417
0.590	-0.334	0.200	-0.476	0.210	-0.480	0.400	-0.394
0.630	-0.380	0.250	-0.361	0.250	-0.425	0.490	-0.345
0.700	-0.502	0.260	-0.370	0.340	-0.409	0.580	-0.383
0.750	-0.656	0.280	-0.365	0.370	-0.407	0.650	-0.513
0.810	-0.588	0.290	-0.357	0.400	-0.352	0.700	-0.489
0.840	-0.641	0.310	-0.337	0.410	-1.238**	0.750	-0.624
0.900	-0.287	0.320	-0.379	0.430	-0.403	0.800	-0.699
0.960	-0.084	0.340	-0.352	0.440	-0.416	0.830	-0.711
		0.350	-0.170**	0.460	-0.392	0.900	-0.248
		0.370	-0.353	0.490	-0.389	0.960	-0.078
		0.380	-0.369	0.500	-0.409		
		0.400	-0.333	0.520	-0.437		
		0.410	-0.352	0.540	-0.417		
		0.430	-0.336	0.550	-0.408		
		0.440	-0.339	0.580	-0.407		
		0.460	-0.343	0.600	-0.453		
		0.470	-0.351	0.610	-0.471		
		0.490	-0.376	0.650	-0.598		
		0.500	-0.380	0.700	-0.571		
		0.520	-0.357	0.750	-0.597		
		0.530	-0.387	0.820	-0.719		
		0.550	-0.415	0.890	-0.204		
		0.560	-0.432	0.900	-0.178		
		0.580	-0.413	0.960	-0.082		
		0.590	-0.457				
		0.600	-0.431				
		0.640	-0.585				
		0.700	-0.622				
		0.750	-0.078**				
		0.820	-0.575				
		0.870	-0.426				
		0.930	-0.311				
		0.960	-0.236				
			Lower Surface				
0.020	-1.201	0.020	-0.742	0.020	-0.647	0.020	-0.779
0.110	-0.132	0.060	-0.140	0.060	-0.099	0.060	0.003
0.230	-0.048	0.090	-0.098	0.090	-0.065	0.110	-0.138
0.400	0.033	0.120	-0.008	0.120	-0.065	0.250	-0.118
0.490	0.068	0.200	-0.047	0.200	-0.017	0.400	-0.089
0.630	0.936**	0.260	0.015	0.250	-0.045	0.490	-0.045
0.750	0.152	0.400	0.011	0.400	-0.030	0.580	-0.022
0.850	0.172	0.490	0.027	0.490	-0.073	0.650	0.109
0.900	0.255	0.580	0.053	0.580	0.018	0.750	0.337
0.960	0.172	0.640	0.241	0.650	-0.082	0.830	0.391
		0.750	0.283	0.750	0.001	0.900	0.450
		0.870	0.373	0.890	0.439	0.960	0.314
		0.930	0.299	0.930	0.354		
		0.960	0.212	0.960	0.271		
CN =	0.367		0.490		0.448		0.488

Table I-2. Continued.

Flight 192, Wing sweep = 26°, Time = 10-44-34-000, MINF = 0.506, Camber = 5/10, ALPT = 11.09, BETA = 0.05, QINF = 123.6, RNPU = 1.5E+06, CNWP = 0.5703

η = 0.93		0.76		0.59		0.40	
			Upper Surface				
x/c	CP	*x/c*	CP	*x/c*	CP	*x/c*	CP
0.020	-1.320	0.000	-0.326	0.000	-2.499**	0.010	-3.543
0.060	-0.895	0.020	-2.929**	0.020	-3.359	0.020	-2.244
0.110	-0.922	0.040	-1.456	0.060	-1.487	0.060	-1.746
0.200	-0.650	0.060	-1.526	0.090	-1.374	0.110	-1.344
0.230	-0.642	0.090	-1.323	0.110	-1.623	0.140	-1.031
0.400	-0.410	0.130	-1.329	0.130	-1.391	0.190	-5.044**
0.490	-0.417	0.150	-1.305	0.150	-1.156	0.250	-0.654
0.590	-0.501	0.200	-0.957	0.210	-1.102	0.400	-0.425
0.630	-0.524	0.250	-0.837	0.250	-0.664	0.490	-0.493
0.700	-0.595	0.260	-0.585	0.340	-0.647	0.580	-0.484
0.750	-0.809	0.280	-0.680	0.370	-0.575	0.650	-0.465
0.810	-0.890	0.290	-0.713	0.400	-0.729	0.700	-0.477
0.840	-0.863	0.310	-0.619	0.410	-0.498	0.750	-0.507
0.900	-0.338	0.320	-0.587	0.430	-0.570	0.800	-0.577
0.960	-0.264	0.340	-0.583	0.440	-0.520	0.830	-0.375
		0.350	-0.266**	0.460	0.059**	0.900	-0.242
		0.370	-0.556	0.490	-0.412	0.960	-0.194
		0.380	-0.546	0.500	-0.537		
		0.400	-0.363	0.520	-0.450		
		0.410	-0.588	0.540	-0.494		
		0.430	-0.533	0.550	-0.477		
		0.440	-0.420	0.580	-0.513		
		0.460	-0.665	0.600	-0.478		
		0.470	-0.514	0.610	-0.284		
		0.490	-0.536	0.650	1.566**		
		0.500	-0.504	0.700	-0.573		
		0.520	-0.500	0.750	-0.763		
		0.530	-0.460	0.820	-0.475		
		0.550	-0.544	0.890	-0.113		
		0.560	-0.472	0.900	-0.125		
		0.580	-0.460	0.960	-0.113		
		0.590	-0.539				
		0.600	-0.586				
		0.640	1.957**				
		0.700	-0.643				
		0.750	-0.660				
		0.820	1.553**				
		0.870	-0.304				
		0.930	-0.127				
		0.960	-0.083				
			Lower Surface				
0.020	0.304	0.020	0.810	0.020	0.687	0.020	0.855
0.110	0.203	0.060	0.614	0.060	0.779	0.060	5.287**
0.230	0.222	0.090	0.401	0.090	0.501	0.110	0.308
0.400	0.170	0.120	0.404	0.120	-0.463	0.250	0.274
0.490	0.125	0.200	0.235	0.200	0.010	0.400	0.279
0.630	8.619**	0.260	0.202	0.250	0.367	0.490	0.116
0.750	0.192	0.400	1.494**	0.400	0.244	0.580	0.114
0.850	0.244	0.490	0.184	0.490	0.121	0.650	0.264
0.900	0.341	0.580	0.333	0.580	0.204	0.750	0.419
0.960	0.147	0.640	0.910**	0.650	0.389	0.830	0.498
		0.750	0.368	0.750	0.511	0.900	0.565
		0.870	0.427	0.890	********	0.960	0.344
		0.930	0.408	0.930	0.423		
		0.960	0.200	0.960	1.815**		
CN =	0.751		0.953		0.928		0.923

Table I-2. Continued.

Flight 192, Wing sweep = 26°, Time = 10-51-35-500, MINF = 0.508, Camber = 0/10, ALPT = 12.22, BETA = 0.76, QINF = 134.1, RNPU = 1.6E+06, CNWP = 0.3622

η = 0.93		0.76		0.59		0.40	
			Upper Surface				
x/c	CP	*x/c*	CP	*x/c*	CP	*x/c*	CP
0.020	-1.958	0.000	-1.225	0.000	-2.680**	0.010	-2.272
0.060	-1.155	0.020	-3.115**	0.020	-2.734	0.020	-2.089
0.110	-1.023	0.040	-1.970	0.060	-1.434	0.060	-2.054
0.200	-0.706	0.060	-1.874	0.090	-1.662	0.110	-1.612
0.230	-0.612	0.090	-1.512	0.110	-1.679	0.140	-1.130
0.400	-0.466	0.130	-1.275	0.130	-1.195	0.190	-5.027**
0.490	-0.389	0.150	-1.182	0.150	-1.124	0.250	-0.746
0.590	-0.466	0.200	-0.928	0.210	-1.036	0.400	-0.537
0.630	-0.478	0.250	-0.851	0.250	-0.649	0.490	-0.580
0.700	-0.502	0.260	-0.590	0.340	-0.619	0.580	-0.608
0.750	-0.570	0.280	-0.727	0.370	-0.515	0.650	-0.532
0.810	-0.706	0.290	-0.698	0.400	-0.611	0.700	-0.532
0.840	-0.682	0.310	-0.633	0.410	-0.462	0.750	-0.537
0.900	-0.315	0.320	-0.572	0.430	-0.512	0.800	-0.624
0.960	-0.312	0.340	-0.589	0.440	-0.452	0.830	-0.387
		0.350	-0.358**	0.460	0.059**	0.900	-0.346
		0.370	-0.517	0.490	-0.367	0.960	-0.292
		0.380	-0.543	0.500	-0.473		
		0.400	-0.379	0.520	-0.358		
		0.410	-0.570	0.540	-0.414		
		0.430	-0.512	0.550	-0.433		
		0.440	-0.367	0.580	-0.415		
		0.460	-0.628	0.600	-0.347		
		0.470	-0.422	0.610	-0.157		
		0.490	-0.465	0.650	1.066**		
		0.500	-0.437	0.700	-0.365		
		0.520	-0.481	0.750	-0.564		
		0.530	-0.382	0.820	-0.280		
		0.550	-0.442	0.890	-0.188		
		0.560	-0.302	0.900	-0.207		
		0.580	-0.371	0.960	-0.174		
		0.590	-0.413				
		0.600	-0.507				
		0.640	1.426**				
		0.700	-0.392				
		0.750	-0.274				
		0.820	1.054**				
		0.870	-0.164				
		0.930	-0.203				
		0.960	-0.130				
			Lower Surface				
0.020	0.413	0.020	0.970	0.020	0.858	0.020	0.868
0.110	0.275	0.060	0.678	0.060	0.816	0.060	4.495**
0.230	0.252	0.090	0.488	0.090	0.584	0.110	0.400
0.400	0.169	0.120	0.452	0.120	-0.389	0.250	0.338
0.490	0.119	0.200	0.422	0.200	0.148	0.400	0.286
0.630	7.567**	0.260	0.198	0.250	0.384	0.490	0.120
0.750	0.207	0.400	0.999**	0.400	0.227	0.580	0.152
0.850	0.256	0.490	0.183	0.490	0.124	0.650	0.240
0.900	0.323	0.580	0.319	0.580	0.233	0.750	0.420
0.960	0.143	0.640	0.860**	0.650	0.378	0.830	0.495
		0.750	0.356	0.750	0.484	0.900	0.587
		0.870	0.414	0.890	********	0.960	0.317
		0.930	0.364	0.930	0.386		
		0.960	0.188	0.960	1.296**		
CN =	0.757		0.912		0.869		1.042

Table I-2. Continued.

Flight 192, Wing sweep = 26°, Time = 11-13-15-500, MINF = 0.497, Camber = 10/16, ALPT = 10.03, BETA = -0.72, QINF = 118.0, RNPU = 1.4E+06, CNWP = 0.5683

η = 0.93		0.76		0.59		0.40	
			Upper Surface				
x/c	CP	*x/c*	CP	*x/c*	CP	*x/c*	CP
0.020	-0.713	0.000	0.628	0.000	********	0.010	-1.982
0.060	-0.739	0.020	-2.012**	0.020	-1.435	0.020	-1.292
0.110	-0.805	0.040	-1.062	0.060	-0.911	0.060	-1.787
0.200	-0.763	0.060	-1.530	0.090	-1.479	0.110	-1.671
0.230	-0.685	0.090	-1.443	0.110	-2.012	0.140	-1.273
0.400	-0.479	0.130	-1.612	0.130	-1.783	0.190	********
0.490	-0.412	0.150	-1.671	0.150	-1.414	0.250	-0.625
0.590	-0.547	0.200	-1.150	0.210	-1.252	0.400	-0.475
0.630	-0.600	0.250	-0.956	0.250	-0.670	0.490	-0.613
0.700	-0.710	0.260	-0.590	0.340	-0.693	0.580	-0.666
0.750	-0.967	0.280	-0.784	0.370	-0.554	0.650	-0.631
0.810	-1.138	0.290	-0.759	0.400	-0.776	0.700	-0.647
0.840	-1.031	0.310	-0.668	0.410	-0.553	0.750	-0.785
0.900	-0.397	0.320	-0.643	0.430	-0.648	0.800	-0.871
0.960	-0.542	0.340	-0.623	0.440	-0.584	0.830	-0.631
		0.350	-0.446**	0.460	-0.030**	0.900	-0.277
		0.370	-0.586	0.490	-0.501	0.960	-0.278
		0.380	-0.632	0.500	-0.684		
		0.400	-0.364	0.520	-0.418		
		0.410	-0.669	0.540	-0.602		
		0.430	-0.631	0.550	-0.612		
		0.440	-0.443	0.580	-0.616		
		0.460	-0.861	0.600	-0.569		
		0.470	-0.518	0.610	-0.418		
		0.490	-0.614	0.650	-5.954**		
		0.500	-0.554	0.700	-0.758		
		0.520	-0.574	0.750	-1.040		
		0.530	-0.521	0.820	-0.615		
		0.550	-0.650	0.890	-0.295		
		0.560	-0.543	0.900	-0.354		
		0.580	-0.565	0.960	-0.271		
		0.590	-0.635				
		0.600	-0.775				
		0.640	-5.544**				
		0.700	-0.815				
		0.750	-0.703				
		0.820	-5.967**				
		0.870	-0.294				
		0.930	-0.247				
		0.960	-0.211				
			Lower Surface				
0.020	0.061	0.020	0.579	0.020	0.588	0.020	0.653
0.110	0.201	0.060	0.585	0.060	0.720	0.060	3.566**
0.230	0.087	0.090	0.393	0.090	0.475	0.110	0.259
0.400	0.195	0.120	0.450	0.120	-0.622	0.250	0.337
0.490	0.212	0.200	0.115	0.200	-0.166	0.400	0.299
0.630	3.628**	0.260	0.182	0.250	0.430	0.490	0.129
0.750	0.249	0.400	-6.029**	0.400	0.259	0.580	-0.036
0.850	0.360	0.490	0.239	0.490	0.162	0.650	0.322
0.900	0.390	0.580	0.393	0.580	0.314	0.750	0.538
0.960	0.132	0.640	1.051**	0.650	0.487	0.830	0.559
		0.750	0.480	0.750	0.581	0.900	0.733
		0.870	0.506	0.890	********	0.960	0.403
		0.930	0.527	0.930	0.527		
		0.960	0.310	0.960	-5.692**		
CN =	0.836		1.078		1.034		1.048

Table I-2. Continued.

Flight 201, Wing sweep = 9°, Time = 9-54-1-000, MINF = 0.519, Camber = 15/10, ALPT = 3.93, BETA = 0.83, QINF = 276.0, RNPU = 3.2E+06, CNWP = 0.3442

η = 0.93		0.76		0.59		0.40	
			Upper Surface				
x/c	CP	*x/c*	CP	*x/c*	CP	*x/c*	CP
0.020	0.624	0.000	-0.905	0.000	0.366**	0.010	0.482
0.060	0.075	0.020	0.519	0.020	0.652	0.020	0.297**
0.110	-0.421	0.040	0.429	0.060	0.759**	0.060	-0.512**
0.200	-0.457	0.060	-0.154	0.090	-0.534	0.110	-1.105
0.230	-0.386	0.090	-0.471	0.110	-0.904	0.140	-0.853
0.400	-0.265	0.130	-0.800	0.130	-1.054	0.190	-5.311**
0.490	-0.257	0.150	-0.949	0.150	-0.785	0.250	-0.489
0.590	-0.372	0.200	-0.666	0.210	-0.625	0.400	-0.427
0.630	-0.379	0.250	-0.486	0.250	-0.454	0.490	-0.409
0.700	-0.483	0.260	-0.430	0.340	-0.444	0.580	-0.411
0.750	-0.665	0.280	-0.456	0.370	-0.468	0.650	-0.529
0.810	-0.613	0.290	-0.432	0.400	-0.430	0.700	-0.503
0.840	-0.646	0.310	-0.419	0.410	-0.421	0.750	-0.641
0.900	-0.284	0.320	-0.413	0.430	-0.438	0.800	-0.718
0.960	-0.099	0.340	-0.395	0.440	-0.408	0.830	-0.710
		0.350	-0.250**	0.460	-0.165	0.900	-0.205
		0.370	-0.399	0.490	-0.390	0.960	-0.091**
		0.380	-0.430	0.500	-0.438		
		0.400	-0.369	0.520	-0.402		
		0.410	-0.415	0.540	-0.436		
		0.430	-0.386	0.550	-0.440		
		0.440	-0.366	0.580	-0.425		
		0.460	-0.408	0.600	-0.488		
		0.470	-0.407	0.610	-0.480		
		0.490	-0.414	0.650	0.028**		
		0.500	-0.426	0.700	-0.603		
		0.520	-0.413	0.750	-0.667		
		0.530	-0.404	0.820	-0.395		
		0.550	-0.434	0.890	-0.241		
		0.560	-0.446	0.900	-0.172		
		0.580	-0.424	0.960	-0.043		
		0.590	-0.493				
		0.600	-0.488				
		0.640	-0.574				
		0.700	-0.619				
		0.750	-0.002**				
		0.820	-0.570				
		0.870	-0.394				
		0.930	-0.277				
		0.960	-0.204				
			Lower Surface				
0.020	-1.028	0.020	-0.711	0.020	-0.686	0.020	-1.051
0.110	-0.272	0.060	-0.430	0.060	-0.050	0.060	-1.207
0.230	-0.041	0.090	-0.174	0.090	0.021	0.110	0.057
0.400	0.104	0.120	0.042**	0.120	-0.098	0.250	-0.041
0.490	0.117	0.200	-0.040	0.200	-0.076	0.400	-0.042
0.630	1.475**	0.260	0.055	0.250	0.045	0.490	-0.018
0.750	0.158	0.400	0.043	0.400	0.015	0.580	-0.009
0.850	0.185	0.490	0.052	0.490	0.004	0.650	0.125
0.900	0.261	0.580	0.081	0.580	0.058	0.750	0.344
0.960	0.156	0.640	0.247	0.650	0.019	0.830	0.429
		0.750	0.316	0.750	-0.035**	0.900	0.489
		0.870	0.399	0.890	0.451	0.960	0.329
		0.930	0.307	0.930	0.366		
		0.960	0.208	0.960	0.477		
CN =	0.398		0.535		0.524		0.544

Table I-2. Continued.

Flight 201, Wing sweep = 9°, Time = 9-54-22-000, MINF = 0.508, Camber = 15/10, ALPT = 4.00, BETA = 0.86, QINF = 273.4, RNPU = 3.2E+06, CNWP = 0.3278

η = 0.93		0.76		0.59		0.40	
			Upper Surface				
x/c	CP	*x/c*	CP	*x/c*	CP	*x/c*	CP
0.020	0.617	0.000	-0.957	0.000	0.429**	0.010	0.416
0.060	0.069	0.020	0.538	0.020	0.619	0.020	0.229**
0.110	-0.372	0.040	0.426	0.060	0.701**	0.060	-0.587**
0.200	-0.455	0.060	-0.169	0.090	-0.564	0.110	-1.185
0.230	-0.412	0.090	-0.495	0.110	-0.931	0.140	-0.889
0.400	-0.275	0.130	-0.820	0.130	-1.086	0.190	-5.547**
0.490	-0.271	0.150	-0.966	0.150	-0.785	0.250	-0.519
0.590	-0.373	0.200	-0.677	0.210	-0.649	0.400	-0.440
0.630	-0.389	0.250	-0.483	0.250	-0.474	0.490	-0.420
0.700	-0.490	0.260	-0.437	0.340	-0.447	0.580	-0.423
0.750	-0.681	0.280	-0.461	0.370	-0.460	0.650	-0.543
0.810	-0.612	0.290	-0.442	0.400	-0.426	0.700	-0.522
0.840	-0.647	0.310	-0.425	0.410	-0.431	0.750	-0.667
0.900	-0.291	0.320	-0.421	0.430	-0.457	0.800	-0.743
0.960	-0.094	0.340	-0.402	0.440	-0.426	0.830	-0.740
		0.350	-0.271**	0.460	-0.194	0.900	-0.245
		0.370	-0.403	0.490	-0.400	0.960	-0.087**
		0.380	-0.436	0.500	-0.459		
		0.400	-0.397	0.520	-0.417		
		0.410	-0.424	0.540	-0.428		
		0.430	-0.413	0.550	-0.452		
		0.440	-0.373	0.580	-0.439		
		0.460	-0.421	0.600	-0.501		
		0.470	-0.423	0.610	-0.503		
		0.490	-0.414	0.650	-0.020**		
		0.500	-0.424	0.700	-0.613		
		0.520	-0.448	0.750	-0.673		
		0.530	-0.417	0.820	-0.421		
		0.550	-0.457	0.890	-0.247		
		0.560	-0.451	0.900	-0.170		
		0.580	-0.432	0.960	-0.037		
		0.590	-0.498				
		0.600	-0.508				
		0.640	-0.588				
		0.700	-0.644				
		0.750	-0.047**				
		0.820	-0.627				
		0.870	-0.438				
		0.930	-0.255				
		0.960	-0.174				
			Lower Surface				
0.020	-1.048	0.020	-0.797	0.020	-0.603	0.020	-0.883
0.110	-0.293	0.060	-0.384	0.060	-0.041	0.060	-1.218
0.230	-0.073	0.090	-0.160	0.090	0.034	0.110	0.038
0.400	0.126	0.120	0.070**	0.120	-0.086	0.250	-0.038
0.490	0.118	0.200	-0.069	0.200	-0.111	0.400	-0.067
0.630	1.312**	0.260	0.062	0.250	0.046	0.490	-0.046
0.750	0.166	0.400	0.045	0.400	-0.006	0.580	-0.036
0.850	0.189	0.490	0.051	0.490	-0.036	0.650	0.103
0.900	0.269	0.580	0.080	0.580	0.051	0.750	0.330
0.960	0.159	0.640	0.247	0.650	-0.029	0.830	0.422
		0.750	0.301	0.750	-0.022**	0.900	0.485
		0.870	0.395	0.890	0.470	0.960	0.323
		0.930	0.301	0.930	0.366		
		0.960	0.218	0.960	0.464		
CN =	0.401		0.550		0.524		0.558

Table I-2. Continued.

Flight 201, Wing sweep = 9°, Time = 9-55-2-500, MINF = 0.407, Camber = 20/18, ALPT = 4.05, BETA = 1.12, QINF = 189.8, RNPU = 2.7E+06, CNWP = 0.4625

η = 0.93		0.76		0.59		0.40	
			Upper Surface				
x/c	CP	*x/c*	CP	*x/c*	CP	*x/c*	CP
0.020	0.678	0.000	-1.528	0.000	0.405**	0.010	0.592
0.060	0.093	0.020	0.560	0.020	0.716	0.020	0.405**
0.110	-0.460	0.040	0.533	0.060	1.221**	0.060	-0.628**
0.200	-0.560	0.060	-0.215	0.090	-0.726	0.110	-1.461
0.230	-0.519	0.090	-0.639	0.110	-1.209	0.140	-1.059
0.400	-0.320	0.130	-1.076	0.130	-1.340	0.190	-8.623**
0.490	-0.327	0.150	-1.240	0.150	-0.999	0.250	-0.585
0.590	-0.480	0.200	-0.837	0.210	-0.779	0.400	-0.526
0.630	-0.510	0.250	-0.623	0.250	-0.539	0.490	-0.485
0.700	-0.702	0.260	-0.533	0.340	-0.543	0.580	-0.501
0.750	-0.937	0.280	-0.547	0.370	-0.538	0.650	-0.705
0.810	-0.874	0.290	-0.506	0.400	-0.525	0.700	-0.682
0.840	-0.922	0.310	-0.512	0.410	-0.530	0.750	-0.942
0.900	-0.288	0.320	-0.504	0.430	-0.524	0.800	-1.083
0.960	-0.340	0.340	-0.483	0.440	-0.490	0.830	-0.990
		0.350	-0.307**	0.460	-0.174	0.900	-0.385
		0.370	-0.482	0.490	-0.502	0.960	-0.430**
		0.380	-0.546	0.500	-0.564		
		0.400	-0.462	0.520	-0.522		
		0.410	-0.533	0.540	-0.532		
		0.430	-0.505	0.550	-0.537		
		0.440	-0.433	0.580	-0.551		
		0.460	-0.503	0.600	-0.612		
		0.470	-0.494	0.610	-0.607		
		0.490	-0.524	0.650	0.046**		
		0.500	-0.501	0.700	-0.773		
		0.520	-0.509	0.750	-0.877		
		0.530	-0.498	0.820	-0.381		
		0.550	-0.525	0.890	-0.367		
		0.560	-0.586	0.900	-0.312		
		0.580	-0.526	0.960	-0.307		
		0.590	-0.621				
		0.600	-0.626				
		0.640	-0.752				
		0.700	-0.853				
		0.750	0.008**				
		0.820	-0.674				
		0.870	-0.596				
		0.930	-0.321				
		0.960	-0.315				
			Lower Surface				
0.020	-1.070	0.020	-0.747	0.020	-0.524	0.020	-0.591
0.110	-0.169	0.060	-0.483	0.060	0.119	0.060	-1.552
0.230	-0.041	0.090	-0.049	0.090	0.228	0.110	0.204
0.400	0.198	0.120	0.246**	0.120	0.033	0.250	0.081
0.490	0.205	0.200	-0.030	0.200	-0.073	0.400	0.071
0.630	1.299**	0.260	0.177	0.250	0.166	0.490	0.122
0.750	0.242	0.400	0.154	0.400	0.115	0.580	0.129
0.850	0.269	0.490	0.162	0.490	0.012	0.650	0.295
0.900	0.352	0.580	0.239	0.580	0.218	0.750	0.506
0.960	0.154	0.640	0.407	0.650	0.001	0.830	0.554
		0.750	0.435	0.750	-0.220**	0.900	0.610
		0.870	0.506	0.890	0.571	0.960	0.424
		0.930	0.401	0.930	0.469		
		0.960	0.286	0.960	0.603		
CN =	0.581		0.758		0.735		0.805

Table I-2. Continued.

Flight 201, Wing sweep = 9°, Time = 9-55-27-000, MINF = 0.368, Camber = 20/17, ALPT = 5.12, BETA = 0.89, QINF = 161.9, RNPU = 2.6E+06, CNWP = 0.4656

η = 0.93		0.76		0.59		0.40	
			Upper Surface				
x/c	CP	*x/c*	CP	*x/c*	CP	*x/c*	CP
0.020	0.626	0.000	-1.169	0.000	0.860**	0.010	0.425
0.060	-0.022	0.020	0.384	0.020	0.585	0.020	0.187**
0.110	-0.552	0.040	0.423	0.060	1.154**	0.060	-0.844**
0.200	-0.650	0.060	-0.416	0.090	-0.881	0.110	-1.675
0.230	-0.557	0.090	-0.846	0.110	-1.451	0.140	-1.150
0.400	-0.379	0.130	-1.278	0.130	-1.544	0.190	********
0.490	-0.360	0.150	-1.410	0.150	-1.100	0.250	-0.651
0.590	-0.523	0.200	-0.967	0.210	-0.887	0.400	-0.582
0.630	-0.550	0.250	-0.698	0.250	-0.636	0.490	-0.551
0.700	-0.736	0.260	-0.604	0.340	-0.626	0.580	-0.556
0.750	-0.993	0.280	-0.610	0.370	-0.633	0.650	-0.723
0.810	-0.909	0.290	-0.610	0.400	-0.552	0.700	-0.696
0.840	-0.987	0.310	-0.582	0.410	-0.570	0.750	-0.948
0.900	-0.346	0.320	-0.575	0.430	-0.615	0.800	-1.080
0.960	-0.350	0.340	-0.545	0.440	-0.554	0.830	-1.027
		0.350	-0.347**	0.460	-0.144	0.900	-0.409
		0.370	-0.542	0.490	-0.521	0.960	-0.451**
		0.380	-0.598	0.500	-0.583		
		0.400	-0.497	0.520	-0.540		
		0.410	-0.574	0.540	-0.577		
		0.430	-0.540	0.550	-0.601		
		0.440	-0.496	0.580	-0.573		
		0.460	-0.551	0.600	-0.642		
		0.470	-0.548	0.610	-0.604		
		0.490	-0.554	0.650	0.045**		
		0.500	-0.554	0.700	-0.780		
		0.520	-0.571	0.750	-0.902		
		0.530	-0.541	0.820	-0.388		
		0.550	-0.582	0.890	-0.362		
		0.560	-0.610	0.900	-0.324		
		0.580	-0.572	0.960	-0.266		
		0.590	-0.679				
		0.600	-0.660				
		0.640	-0.756				
		0.700	-0.881				
		0.750	-0.014**				
		0.820	-0.703				
		0.870	-0.547				
		0.930	-0.325				
		0.960	-0.338				
			Lower Surface				
0.020	-1.137	0.020	-0.587	0.020	-0.227	0.020	-0.565
0.110	-0.129	0.060	0.014	0.060	0.269	0.060	-1.754
0.230	-0.031	0.090	0.206	0.090	0.276	0.110	0.266
0.400	0.201	0.120	0.393**	0.120	0.053	0.250	0.115
0.490	0.230	0.200	-0.032	0.200	-0.091	0.400	0.093
0.630	1.119**	0.260	0.190	0.250	0.203	0.490	0.153
0.750	0.271	0.400	0.175	0.400	0.153	0.580	0.159
0.850	0.255	0.490	0.171	0.490	0.023	0.650	0.313
0.900	0.350	0.580	0.213	0.580	0.224	0.750	0.480
0.960	0.148	0.640	0.404	0.650	0.009	0.830	0.565
		0.750	0.442	0.750	-0.043**	0.900	0.635
		0.870	0.516	0.890	0.571	0.960	0.409
		0.930	0.418	0.930	0.463		
		0.960	0.263	0.960	0.604		
CN =	0.649		0.874		0.801		0.870

Table I-2. Continued.

Flight 201, Wing sweep = 9°, Time = 9-55-44-500, MINF = 0.345, Camber = 20/17, ALPT = 6.02, BETA = 0.63, QINF = 145.7, RNPU = 2.4E+06, CNWP = 0.5411

η = 0.93		0.76		0.59		0.40	
			Upper Surface				
x/c	CP	*x/c*	CP	*x/c*	CP	*x/c*	CP
0.020	0.547	0.000	-0.845	0.000	1.054**	0.010	0.299
0.060	-0.055	0.020	0.258	0.020	0.497	0.020	0.078**
0.110	-0.615	0.040	0.361	0.060	1.325**	0.060	-0.996**
0.200	-0.698	0.060	-0.531	0.090	-1.067	0.110	-1.754
0.230	-0.592	0.090	-0.948	0.110	-1.567	0.140	-1.233
0.400	-0.371	0.130	-1.380	0.130	-1.668	0.190	********
0.490	-0.312	0.150	-1.490	0.150	-1.125	0.250	-0.668
0.590	-0.514	0.200	-1.012	0.210	-0.921	0.400	-0.576
0.630	-0.553	0.250	-0.749	0.250	-0.678	0.490	-0.546
0.700	-0.728	0.260	-0.616	0.340	-0.638	0.580	-0.598
0.750	-0.988	0.280	-0.651	0.370	-0.644	0.650	-0.714
0.810	-0.924	0.290	-0.643	0.400	-0.526	0.700	-0.703
0.840	-1.009	0.310	-0.615	0.410	-0.575	0.750	-0.936
0.900	-0.321	0.320	-0.613	0.430	-0.626	0.800	-1.058
0.960	-0.376	0.340	-0.579	0.440	-0.546	0.830	-1.039
		0.350	-0.337**	0.460	-0.127	0.900	-0.428
		0.370	-0.573	0.490	-0.550	0.960	-0.341**
		0.380	-0.637	0.500	-0.630		
		0.400	-0.503	0.520	-0.504		
		0.410	-0.606	0.540	-0.587		
		0.430	-0.550	0.550	-0.619		
		0.440	-0.492	0.580	-0.573		
		0.460	-0.561	0.600	-0.636		
		0.470	-0.489	0.610	-0.616		
		0.490	-0.576	0.650	0.048**		
		0.500	-0.544	0.700	-0.780		
		0.520	-0.588	0.750	-0.928		
		0.530	-0.538	0.820	-0.333		
		0.550	-0.564	0.890	-0.334		
		0.560	-0.600	0.900	-0.300		
		0.580	-0.596	0.960	-0.239		
		0.590	-0.663				
		0.600	-0.674				
		0.640	-0.738				
		0.700	-0.869				
		0.750	0.004**				
		0.820	-0.654				
		0.870	-0.506				
		0.930	-0.296				
		0.960	-0.325				
			Lower Surface				
0.020	-0.796	0.020	-0.078	0.020	-0.094	0.020	-0.353
0.110	0.074	0.060	0.306	0.060	0.326	0.060	-1.937
0.230	0.009	0.090	0.256	0.090	0.305	0.110	0.302
0.400	0.258	0.120	0.403**	0.120	0.068	0.250	0.168
0.490	0.252	0.200	-0.001	0.200	-0.102	0.400	0.153
0.630	1.021**	0.260	0.238	0.250	0.267	0.490	0.184
0.750	0.292	0.400	0.214	0.400	0.158	0.580	0.193
0.850	0.274	0.490	0.217	0.490	0.024	0.650	0.331
0.900	0.416	0.580	0.240	0.580	0.247	0.750	0.530
0.960	0.174	0.640	0.421	0.650	-0.006	0.830	0.557
		0.750	0.466	0.750	-0.163**	0.900	0.629
		0.870	0.544	0.890	0.617	0.960	0.457
		0.930	0.447	0.930	0.495		
		0.960	0.274	0.960	0.706		
CN =	0.710		0.933		0.841		0.907

Table I-2. Continued.

Flight 201, Wing sweep = 9°, Time = 9-56-4-500, MINF = 0.315, Camber = 20/18, ALPT = 7.26, BETA = 0.66, QINF = 124.2, RNPU = 2.3E+06, CNWP = 0.6770

η = 0.93		0.76		0.59		0.40	
			Upper Surface				
x/c	CP	*x/c*	CP	*x/c*	CP	*x/c*	CP
0.020	0.540	0.000	-0.429	0.000	1.488**	0.010	0.112
0.060	-0.153	0.020	0.250	0.020	0.428	0.020	-0.046**
0.110	-0.798	0.040	0.254	0.060	1.441**	0.060	-1.341**
0.200	-0.806	0.060	-0.792	0.090	-1.314	0.110	-2.173
0.230	-0.670	0.090	-1.216	0.110	-1.989	0.140	-1.445
0.400	-0.482	0.130	-1.702	0.130	-1.972	0.190	********
0.490	-0.448	0.150	-1.807	0.150	-1.401	0.250	-0.770
0.590	-0.614	0.200	-1.166	0.210	-1.078	0.400	-0.611
0.630	-0.650	0.250	-0.868	0.250	-0.765	0.490	-0.570
0.700	-0.847	0.260	-0.743	0.340	-0.698	0.580	-0.511
0.750	-1.123	0.280	-0.752	0.370	-0.719	0.650	-0.637
0.810	-1.053	0.290	-0.741	0.400	-0.637	0.700	-0.621
0.840	-1.150	0.310	-0.701	0.410	-0.676	0.750	-0.767
0.900	-0.433	0.320	-0.695	0.430	-0.684	0.800	-0.657
0.960	-0.478	0.340	-0.650	0.440	-0.611	0.830	-0.646
		0.350	-0.416**	0.460	-0.096	0.900	-0.326
		0.370	-0.651	0.490	-0.595	0.960	-0.361**
		0.380	-0.712	0.500	-0.658		
		0.400	-0.610	0.520	-0.612		
		0.410	-0.690	0.540	-0.643		
		0.430	-0.637	0.550	-0.654		
		0.440	-0.568	0.580	-0.693		
		0.460	-0.650	0.600	-0.738		
		0.470	-0.672	0.610	-0.678		
		0.490	-0.643	0.650	0.070**		
		0.500	-0.645	0.700	-0.882		
		0.520	-0.676	0.750	-1.031		
		0.530	-0.616	0.820	-0.522		
		0.550	-0.682	0.890	-0.441		
		0.560	-0.679	0.900	-0.397		
		0.580	-0.654	0.960	-0.267		
		0.590	-0.755				
		0.600	-0.766				
		0.640	-0.822				
		0.700	-0.961				
		0.750	0.019**				
		0.820	-0.860				
		0.870	-0.375				
		0.930	-0.377				
		0.960	-0.403				
			Lower Surface				
0.020	-0.608	0.020	0.091	0.020	0.054	0.020	-0.077
0.110	0.059	0.060	0.366	0.060	0.426	0.060	-2.187
0.230	-0.010	0.090	0.343	0.090	0.438	0.110	0.432
0.400	0.283	0.120	0.489**	0.120	0.112	0.250	0.241
0.490	0.320	0.200	-0.004	0.200	-0.074	0.400	0.195
0.630	0.896**	0.260	0.302	0.250	0.346	0.490	0.214
0.750	0.322	0.400	0.277	0.400	0.247	0.580	0.186
0.850	0.344	0.490	0.262	0.490	0.077	0.650	0.375
0.900	0.481	0.580	0.289	0.580	0.321	0.750	0.556
0.960	0.214	0.640	0.483	0.650	-0.092	0.830	0.626
		0.750	0.537	0.750	-0.011**	0.900	0.694
		0.870	0.619	0.890	0.669	0.960	0.452
		0.930	0.504	0.930	0.561		
		0.960	0.337	0.960	0.847		
CN =	0.849		1.102		0.991		0.944

Table I-2. Continued.

Flight 201, Wing sweep = 9°, Time = 9-56-37-500, MINF = 0.289, Camber = 20/17, ALPT = 7.93, BETA = 0.89, QINF = 107.3, RNPU = 2.1E+06, CNWP = 0.7357

η = 0.93		0.76		0.59		0.40	
			Upper Surface				
x/c	CP	*x/c*	CP	*x/c*	CP	*x/c*	CP
0.020	0.548	0.000	-0.048	0.000	1.910**	0.010	-0.005
0.060	-0.191	0.020	0.181	0.020	0.285	0.020	-0.158**
0.110	-0.847	0.040	0.163	0.060	1.701**	0.060	-1.481**
0.200	-0.833	0.060	-0.948	0.090	-1.450	0.110	-2.228
0.230	-0.660	0.090	-1.322	0.110	-2.113	0.140	-1.536
0.400	-0.504	0.130	-1.793	0.130	-2.105	0.190	********
0.490	-0.466	0.150	-1.887	0.150	-1.446	0.250	-0.801
0.590	-0.645	0.200	-1.227	0.210	-1.132	0.400	-0.617
0.630	-0.665	0.250	-0.886	0.250	-0.791	0.490	-0.569
0.700	-0.842	0.260	-0.790	0.340	-0.751	0.580	-0.522
0.750	-1.114	0.280	-0.797	0.370	-0.689	0.650	-0.626
0.810	-1.046	0.290	-0.749	0.400	-0.642	0.700	-0.562
0.840	-1.132	0.310	-0.728	0.410	-0.663	0.750	-0.692
0.900	-0.433	0.320	-0.731	0.430	-0.696	0.800	-0.631
0.960	-0.463	0.340	-0.663	0.440	-0.637	0.830	-0.660
		0.350	-0.424**	0.460	-0.006	0.900	-0.278
		0.370	-0.669	0.490	-0.593	0.960	-0.293**
		0.380	-0.748	0.500	-0.671		
		0.400	-0.602	0.520	-0.601		
		0.410	-0.696	0.540	-0.656		
		0.430	-0.661	0.550	-0.676		
		0.440	-0.576	0.580	-0.692		
		0.460	-0.640	0.600	-0.741		
		0.470	-0.675	0.610	-0.660		
		0.490	-0.655	0.650	0.054**		
		0.500	-0.643	0.700	-0.865		
		0.520	-0.662	0.750	-1.016		
		0.530	-0.612	0.820	-0.463		
		0.550	-0.650	0.890	-0.419		
		0.560	-0.705	0.900	-0.366		
		0.580	-0.652	0.960	-0.238		
		0.590	-0.788				
		0.600	-0.778				
		0.640	-0.800				
		0.700	-0.956				
		0.750	0.034**				
		0.820	-0.836				
		0.870	-0.341				
		0.930	-0.362				
		0.960	-0.393				
			Lower Surface				
0.020	-0.393	0.020	0.147	0.020	0.139	0.020	0.048
0.110	0.294	0.060	0.425	0.060	0.469	0.060	-2.560
0.230	0.011	0.090	0.393	0.090	0.480	0.110	0.455
0.400	0.308	0.120	0.526**	0.120	0.106	0.250	0.291
0.490	0.351	0.200	-0.031	0.200	-0.093	0.400	0.247
0.630	0.680**	0.260	0.332	0.250	0.372	0.490	0.287
0.750	0.353	0.400	0.311	0.400	0.231	0.580	0.252
0.850	0.389	0.490	0.283	0.490	0.081	0.650	0.394
0.900	0.531	0.580	0.314	0.580	0.343	0.750	0.537
0.960	0.237	0.640	0.487	0.650	-0.018	0.830	0.642
		0.750	0.553	0.750	-0.001**	0.900	0.707
		0.870	0.599	0.890	0.686	0.960	0.461
		0.930	0.524	0.930	0.558		
		0.960	0.361	0.960	0.892		
CN =	0.917		1.137		1.022		0.951

Table I-2. Continued.

Flight 201, Wing sweep = 9°, Time = 9-57-0-000, MINF = 0.279, Camber = 20/17, ALPT = 9.10, BETA = 0.95, QINF = 101.4, RNPU = 2.1E+06, CNWP = 0.8558

η = 0.93		0.76		0.59		0.40	
			Upper Surface				
x/c	CP	*x/c*	CP	*x/c*	CP	*x/c*	CP
0.020	0.421	0.000	0.406	0.000	1.962**	0.010	-0.331
0.060	-0.358	0.020	-0.050	0.020	0.049	0.020	-0.431**
0.110	-1.015	0.040	-0.028	0.060	1.645**	0.060	-1.770**
0.200	-0.936	0.060	-1.158	0.090	-1.706	0.110	-2.434
0.230	-0.770	0.090	-1.570	0.110	-2.334	0.140	-1.643
0.400	-0.528	0.130	-2.050	0.130	-2.350	0.190	********
0.490	-0.521	0.150	-2.086	0.150	-1.622	0.250	-0.865
0.590	-0.689	0.200	-1.366	0.210	-1.270	0.400	-0.670
0.630	-0.722	0.250	-0.993	0.250	-0.876	0.490	-0.591
0.700	-0.886	0.260	-0.853	0.340	-0.771	0.580	-0.569
0.750	-1.161	0.280	-0.887	0.370	-0.793	0.650	-0.679
0.810	-1.103	0.290	-0.861	0.400	-0.828	0.700	-0.627
0.840	-1.237	0.310	-0.806	0.410	-0.719	0.750	-0.772
0.900	-0.453	0.320	-0.804	0.430	-0.754	0.800	-0.706
0.960	-0.486	0.340	-0.739	0.440	-0.691	0.830	-0.688
		0.350	-0.466**	0.460	-0.024	0.900	-0.298
		0.370	-0.736	0.490	-0.622	0.960	-0.255**
		0.380	-0.822	0.500	-0.699		
		0.400	-0.655	0.520	-0.654		
		0.410	-0.764	0.540	-0.711		
		0.430	-0.716	0.550	-0.697		
		0.440	-0.645	0.580	-0.646		
		0.460	-0.730	0.600	-0.766		
		0.470	-0.712	0.610	-0.715		
		0.490	-0.710	0.650	0.081**		
		0.500	-0.714	0.700	-0.878		
		0.520	-0.741	0.750	-1.050		
		0.530	-0.664	0.820	-0.464		
		0.550	-0.705	0.890	-0.449		
		0.560	-0.726	0.900	-0.397		
		0.580	-0.687	0.960	-0.227		
		0.590	-0.825				
		0.600	-0.797				
		0.640	-0.825				
		0.700	-0.975				
		0.750	-0.003**				
		0.820	-0.824				
		0.870	-0.356				
		0.930	-0.389				
		0.960	-0.433				
			Lower Surface				
0.020	-0.200	0.020	0.252	0.020	0.268	0.020	0.278
0.110	0.332	0.060	0.499	0.060	0.537	0.060	-2.661
0.230	0.005	0.090	0.434	0.090	0.532	0.110	0.525
0.400	0.319	0.120	0.551**	0.120	0.170	0.250	0.310
0.490	0.332	0.200	-0.009	0.200	-0.115	0.400	0.266
0.630	0.479**	0.260	0.344	0.250	0.420	0.490	0.331
0.750	0.345	0.400	0.323	0.400	0.297	0.580	0.223
0.850	0.360	0.490	0.282	0.490	0.068	0.650	0.422
0.900	0.513	0.580	0.304	0.580	0.367	0.750	0.578
0.960	0.197	0.640	0.487	0.650	0.046	0.830	0.637
		0.750	0.544	0.750	-0.018**	0.900	0.704
		0.870	0.630	0.890	0.687	0.960	0.470
		0.930	0.505	0.930	0.563		
		0.960	0.322	0.960	0.950		
CN =	0.980		1.223		1.121		1.029

Table I-2. Continued.

Flight 201, Wing sweep = 9°, Time = 9-58-22-500, MINF = 0.268, Camber = 20/17, ALPT = 9.90, BETA = 1.32, QINF = 97.7, RNPU = 2.1E+06, CNWP = 0.9262

η = 0.93		0.76		0.59		0.40	
			Upper Surface				
x/c	CP	*x/c*	CP	*x/c*	CP	*x/c*	CP
0.020	0.245	0.000	0.791	0.000	2.257**	0.010	-0.734
0.060	-0.575	0.020	-0.315	0.020	-0.289	0.020	-0.708**
0.110	-1.168	0.040	-0.316	0.060	1.495**	0.060	-2.066**
0.200	-1.002	0.060	-1.412	0.090	-1.999	0.110	-2.619
0.230	-0.857	0.090	-1.813	0.110	-2.615	0.140	-1.732
0.400	-0.567	0.130	-2.301	0.130	-2.593	0.190	********
0.490	-0.547	0.150	-2.287	0.150	-1.733	0.250	-0.828
0.590	-0.699	0.200	-1.494	0.210	-1.376	0.400	-0.647
0.630	-0.745	0.250	-1.042	0.250	-0.949	0.490	-0.586
0.700	-0.904	0.260	-0.900	0.340	-0.819	0.580	-0.563
0.750	-1.178	0.280	-0.947	0.370	-0.819	0.650	-0.631
0.810	-1.117	0.290	-0.893	0.400	-0.719	0.700	-0.576
0.840	-1.233	0.310	-0.849	0.410	-0.766	0.750	-0.706
0.900	-0.466	0.320	-0.847	0.430	-0.755	0.800	-0.620
0.960	-0.477	0.340	-0.782	0.440	-0.690	0.830	-0.603
		0.350	-0.473**	0.460	-0.014	0.900	-0.282
		0.370	-0.759	0.490	-0.664	0.960	-0.188**
		0.380	-0.840	0.500	-0.727		
		0.400	-0.686	0.520	-0.651		
		0.410	-0.775	0.540	-0.690		
		0.430	-0.716	0.550	-0.695		
		0.440	-0.642	0.580	-0.643		
		0.460	-0.694	0.600	-0.809		
		0.470	-0.632	0.610	-0.673		
		0.490	-0.722	0.650	0.111**		
		0.500	-0.714	0.700	-0.817		
		0.520	-0.742	0.750	-0.983		
		0.530	-0.662	0.820	-0.383		
		0.550	-0.621	0.890	-0.402		
		0.560	-0.745	0.900	-0.385		
		0.580	-0.686	0.960	-0.219		
		0.590	-0.829				
		0.600	-0.800				
		0.640	-0.798				
		0.700	-0.939				
		0.750	0.036**				
		0.820	-0.804				
		0.870	-0.298				
		0.930	-0.365				
		0.960	-0.388				
			Lower Surface				
0.020	-0.119	0.020	0.439	0.020	0.449	0.020	0.492
0.110	0.393	0.060	0.591	0.060	0.605	0.060	-2.689
0.230	0.056	0.090	0.522	0.090	0.623	0.110	0.603
0.400	0.313	0.120	0.621**	0.120	0.204	0.250	0.389
0.490	0.441	0.200	0.007	0.200	-0.071	0.400	0.326
0.630	-0.252**	0.260	0.418	0.250	0.486	0.490	0.382
0.750	0.362	0.400	0.374	0.400	0.336	0.580	0.301
0.850	0.378	0.490	0.332	0.490	0.098	0.650	0.442
0.900	0.535	0.580	0.331	0.580	0.397	0.750	0.612
0.960	0.219	0.640	0.510	0.650	0.075	0.830	0.676
		0.750	0.553	0.750	0.008**	0.900	0.740
		0.870	0.639	0.890	0.718	0.960	0.506
		0.930	0.518	0.930	0.577		
		0.960	0.339	0.960	0.952		
CN =	1.074		1.299		1.185		1.072

Table I-2. Continued.

Flight 201, Wing sweep = 9°, Time = 9-52-31-000, MINF = 0.592, Camber = 15/10, ALPT = 3.01, BETA = 0.89, QINF = 309.7, RNPU = 3.2E+06, CNWP = 0.2814

η = 0.93		0.76		0.59		0.40	
			Upper Surface				
x/c	CP	*x/c*	CP	*x/c*	CP	*x/c*	CP
0.020	0.695	0.000	-0.958	0.000	0.199**	0.010	0.634
0.060	0.159	0.020	0.625	0.020	0.729	0.020	0.482**
0.110	-0.273	0.040	0.534	0.060	0.813**	0.060	-0.279**
0.200	-0.406	0.060	-0.016	0.090	-0.383	0.110	-0.945
0.230	-0.356	0.090	-0.347	0.110	-0.760	0.140	-0.758
0.400	-0.242	0.130	-0.693	0.130	-0.960	0.190	-4.076**
0.490	-0.238	0.150	-0.875	0.150	-0.698	0.250	-0.428
0.590	-0.337	0.200	-0.578	0.210	-0.556	0.400	-0.379
0.630	-0.366	0.250	-0.432	0.250	-0.396	0.490	-0.372
0.700	-0.469	0.260	-0.382	0.340	-0.394	0.580	-0.385
0.750	-0.670	0.280	-0.396	0.370	-0.401	0.650	-0.509
0.810	-0.607	0.290	-0.388	0.400	-0.361	0.700	-0.487
0.840	-0.638	0.310	-0.372	0.410	-0.367	0.750	-0.636
0.900	-0.235	0.320	-0.357	0.430	-0.403	0.800	-0.729
0.960	-0.046	0.340	-0.351	0.440	-0.372	0.830	-0.723
		0.350	-0.223**	0.460	-0.176	0.900	-0.198
		0.370	-0.354	0.490	-0.368	0.960	-0.096**
		0.380	-0.390	0.500	-0.407		
		0.400	-0.317	0.520	-0.390		
		0.410	-0.367	0.540	-0.400		
		0.430	-0.354	0.550	-0.402		
		0.440	-0.327	0.580	-0.411		
		0.460	-0.373	0.600	-0.445		
		0.470	-0.360	0.610	-0.451		
		0.490	-0.379	0.650	0.026**		
		0.500	-0.378	0.700	-0.596		
		0.520	-0.389	0.750	-0.640		
		0.530	-0.383	0.820	-0.390		
		0.550	-0.412	0.890	-0.198		
		0.560	-0.420	0.900	-0.118		
		0.580	-0.382	0.960	-0.054		
		0.590	-0.464				
		0.600	-0.462				
		0.640	-0.567				
		0.700	-0.624				
		0.750	-0.004**				
		0.820	-0.521				
		0.870	-0.410				
		0.930	-0.299				
		0.960	-0.202				
			Lower Surface				
0.020	-1.087	0.020	-0.805	0.020	-0.865	0.020	-1.397
0.110	-0.432	0.060	-0.513	0.060	-0.470	0.060	-1.166
0.230	-0.064	0.090	-0.441	0.090	-0.255	0.110	-0.040
0.400	0.087	0.120	-0.260**	0.120	-0.280	0.250	-0.098
0.490	0.126	0.200	-0.063	0.200	-0.099	0.400	-0.085
0.630	1.869**	0.260	-0.103	0.250	0.014	0.490	-0.058
0.750	0.139	0.400	0.018	0.400	-0.004	0.580	-0.036
0.850	0.184	0.490	0.045	0.490	0.012	0.650	0.127
0.900	0.237	0.580	0.088	0.580	0.061	0.750	0.345
0.960	0.153	0.640	0.214	0.650	0.012	0.830	0.425
		0.750	0.266	0.750	-0.030**	0.900	0.490
		0.870	0.330	0.890	0.424	0.960	0.335
		0.930	0.285	0.930	0.335		
		0.960	0.205	0.960	0.458		
CN =	0.331		0.437		0.431		0.477

Table I-2. Continued.

Flight 201, Wing sweep = 9°, Time = 9-54-25-500, MINF = 0.496, Camber = 15/9, ALPT = 4.02, BETA = 1.21, QINF = 262.9, RNPU = 3.2E+06, CNWP = 0.3380

η = 0.93		0.76		0.59		0.40	
			Upper Surface				
x/c	CP	*x/c*	CP	*x/c*	CP	*x/c*	CP
0.020	0.613	0.000	-1.002	0.000	0.469**	0.010	0.360
0.060	0.070	0.020	0.494	0.020	0.588	0.020	0.149**
0.110	-0.349	0.040	0.416	0.060	0.666**	0.060	-0.684**
0.200	-0.476	0.060	-0.195	0.090	-0.612	0.110	-1.234
0.230	-0.388	0.090	-0.512	0.110	-0.980	0.140	-0.936
0.400	-0.270	0.130	-0.840	0.130	-1.117	0.190	-5.803**
0.490	-0.262	0.150	-0.983	0.150	-0.828	0.250	-0.525
0.590	-0.354	0.200	-0.692	0.210	-0.666	0.400	-0.451
0.630	-0.371	0.250	-0.504	0.250	-0.478	0.490	-0.443
0.700	-0.481	0.260	-0.448	0.340	-0.466	0.580	-0.423
0.750	-0.665	0.280	-0.471	0.370	-0.471	0.650	-0.548
0.810	-0.613	0.290	-0.451	0.400	-0.436	0.700	-0.533
0.840	-0.645	0.310	-0.433	0.410	-0.440	0.750	-0.662
0.900	-0.290	0.320	-0.425	0.430	-0.460	0.800	-0.742
0.960	-0.099	0.340	-0.404	0.440	-0.421	0.830	-0.729
		0.350	-0.289**	0.460	-0.184	0.900	-0.246
		0.370	-0.404	0.490	-0.418	0.960	-0.092**
		0.380	-0.440	0.500	-0.447		
		0.400	-0.377	0.520	-0.436		
		0.410	-0.424	0.540	-0.463		
		0.430	-0.420	0.550	-0.457		
		0.440	-0.365	0.580	-0.448		
		0.460	-0.412	0.600	-0.495		
		0.470	-0.420	0.610	-0.510		
		0.490	-0.418	0.650	-0.034**		
		0.500	-0.405	0.700	-0.614		
		0.520	-0.439	0.750	-0.676		
		0.530	-0.415	0.820	-0.410		
		0.550	-0.435	0.890	-0.254		
		0.560	-0.449	0.900	-0.172		
		0.580	-0.428	0.960	-0.036		
		0.590	-0.499				
		0.600	-0.497				
		0.640	-0.582				
		0.700	-0.642				
		0.750	-0.037**				
		0.820	-0.607				
		0.870	-0.424				
		0.930	-0.262				
		0.960	-0.195				
			Lower Surface				
0.020	-1.160	0.020	-0.930	0.020	-0.540	0.020	-0.722
0.110	-0.208	0.060	-0.370	0.060	-0.014	0.060	-1.247
0.230	-0.068	0.090	-0.041	0.090	0.050	0.110	0.061
0.400	0.113	0.120	0.139**	0.120	-0.081	0.250	-0.049
0.490	0.105	0.200	-0.065	0.200	-0.101	0.400	-0.087
0.630	1.350**	0.260	0.064	0.250	0.046	0.490	-0.053
0.750	0.159	0.400	0.046	0.400	-0.002	0.580	-0.050
0.850	0.191	0.490	0.056	0.490	-0.035	0.650	0.097
0.900	0.273	0.580	0.082	0.580	0.051	0.750	0.331
0.960	0.174	0.640	0.260	0.650	-0.031	0.830	0.418
		0.750	0.321	0.750	-0.072**	0.900	0.490
		0.870	0.404	0.890	0.459	0.960	0.328
		0.930	0.325	0.930	0.375		
		0.960	0.226	0.960	0.459		
CN =	0.400		0.567		0.537		0.563

Table I-2. Continued.

Flight 201, Wing sweep = 9°, Time = 9-54-29-500, MINF = 0.484, Camber = 15/10, ALPT = 5.03, BETA = 0.86, QINF = 251.8, RNPU = 3.1E+06, CNWP = 0.3694

η = 0.93		0.76		0.59		0.40	
			Upper Surface				
x/c	CP	*x/c*	CP	*x/c*	CP	*x/c*	CP
0.020	0.560	0.000	-0.624	0.000	0.696**	0.010	0.175
0.060	-0.013	0.020	0.485	0.020	0.458	0.020	-0.003**
0.110	-0.475	0.040	0.288	0.060	0.638**	0.060	-0.873**
0.200	-0.518	0.060	-0.353	0.090	-0.777	0.110	-1.406
0.230	-0.478	0.090	-0.658	0.110	-1.147	0.140	-1.058
0.400	-0.303	0.130	-0.986	0.130	-1.281	0.190	-6.094**
0.490	-0.281	0.150	-1.108	0.150	-0.929	0.250	-0.575
0.590	-0.391	0.200	-0.782	0.210	-0.757	0.400	-0.498
0.630	-0.421	0.250	-0.557	0.250	-0.545	0.490	-0.470
0.700	-0.531	0.260	-0.510	0.340	-0.524	0.580	-0.469
0.750	-0.724	0.280	-0.528	0.370	-0.531	0.650	-0.574
0.810	-0.651	0.290	-0.514	0.400	-0.475	0.700	-0.558
0.840	-0.689	0.310	-0.479	0.410	-0.489	0.750	-0.676
0.900	-0.337	0.320	-0.487	0.430	-0.483	0.800	-0.710
0.960	-0.130	0.340	-0.464	0.440	-0.478	0.830	-0.730
		0.350	-0.281**	0.460	-0.221	0.900	-0.242
		0.370	-0.450	0.490	-0.448	0.960	-0.119**
		0.380	-0.482	0.500	-0.502		
		0.400	-0.417	0.520	-0.476		
		0.410	-0.479	0.540	-0.468		
		0.430	-0.465	0.550	-0.494		
		0.440	-0.410	0.580	-0.484		
		0.460	-0.443	0.600	-0.533		
		0.470	-0.463	0.610	-0.533		
		0.490	-0.450	0.650	-0.020**		
		0.500	-0.447	0.700	-0.639		
		0.520	-0.455	0.750	-0.712		
		0.530	-0.460	0.820	-0.409		
		0.550	-0.471	0.890	-0.248		
		0.560	-0.493	0.900	-0.175		
		0.580	-0.472	0.960	-0.044		
		0.590	-0.522				
		0.600	-0.527				
		0.640	-0.621				
		0.700	-0.681				
		0.750	-0.045**				
		0.820	-0.635				
		0.870	-0.427				
		0.930	-0.280				
		0.960	-0.184				
			Lower Surface				
0.020	-1.093	0.020	-0.652	0.020	-0.345	0.020	-0.441
0.110	-0.052	0.060	-0.027	0.060	0.077	0.060	-1.238
0.230	-0.059	0.090	0.046	0.090	0.128	0.110	0.086
0.400	0.115	0.120	0.194**	0.120	-0.045	0.250	0.003
0.490	0.108	0.200	-0.044	0.200	-0.107	0.400	-0.050
0.630	1.375**	0.260	0.107	0.250	0.098	0.490	-0.030
0.750	0.176	0.400	0.080	0.400	0.020	0.580	-0.042
0.850	0.184	0.490	0.078	0.490	-0.017	0.650	0.116
0.900	0.270	0.580	0.096	0.580	0.061	0.750	0.321
0.960	0.155	0.640	0.256	0.650	-0.034	0.830	0.427
		0.750	0.314	0.750	-0.060**	0.900	0.474
		0.870	0.421	0.890	0.456	0.960	0.312
		0.930	0.337	0.930	0.371		
		0.960	0.238	0.960	0.513		
CN =	0.474		0.658		0.604		0.626

Table I-2. Continued.

Flight 201, Wing sweep = 9°, Time = 9-55-45-500, MINF = 0.344, Camber = 20/17, ALPT = 6.03, BETA = 0.63, QINF = 144.5, RNPU = 2.4E+06, CNWP = 0.5245

η = 0.93		0.76		0.59		0.40	
			Upper Surface				
x/c	CP	*x/c*	CP	*x/c*	CP	*x/c*	CP
0.020	0.549	0.000	-0.850	0.000	1.077**	0.010	0.271
0.060	-0.071	0.020	0.324	0.020	0.469	0.020	0.092**
0.110	-0.636	0.040	0.319	0.060	1.192**	0.060	-1.020**
0.200	-0.690	0.060	-0.550	0.090	-1.062	0.110	-1.784
0.230	-0.535	0.090	-0.971	0.110	-1.614	0.140	-1.258
0.400	-0.397	0.130	-1.393	0.130	-1.668	0.190	********
0.490	-0.376	0.150	-1.517	0.150	-1.202	0.250	-0.717
0.590	-0.534	0.200	-1.024	0.210	-0.944	0.400	-0.596
0.630	-0.565	0.250	-0.744	0.250	-0.670	0.490	-0.566
0.700	-0.750	0.260	-0.636	0.340	-0.629	0.580	-0.568
0.750	-0.995	0.280	-0.671	0.370	-0.648	0.650	-0.735
0.810	-0.932	0.290	-0.635	0.400	-0.591	0.700	-0.724
0.840	-0.986	0.310	-0.607	0.410	-0.595	0.750	-0.944
0.900	-0.344	0.320	-0.605	0.430	-0.617	0.800	-1.068
0.960	-0.380	0.340	-0.570	0.440	-0.565	0.830	-1.063
		0.350	-0.366**	0.460	-0.115	0.900	-0.447
		0.370	-0.565	0.490	-0.541	0.960	-0.325**
		0.380	-0.629	0.500	-0.602		
		0.400	-0.522	0.520	-0.523		
		0.410	-0.591	0.540	-0.578		
		0.430	-0.569	0.550	-0.611		
		0.440	-0.505	0.580	-0.593		
		0.460	-0.581	0.600	-0.657		
		0.470	-0.562	0.610	-0.636		
		0.490	-0.567	0.650	0.062**		
		0.500	-0.575	0.700	-0.801		
		0.520	-0.595	0.750	-0.914		
		0.530	-0.550	0.820	-0.351		
		0.550	-0.603	0.890	-0.343		
		0.560	-0.620	0.900	-0.306		
		0.580	-0.588	0.960	-0.256		
		0.590	-0.675				
		0.600	-0.677				
		0.640	-0.745				
		0.700	-0.877				
		0.750	-0.004**				
		0.820	-0.659				
		0.870	-0.487				
		0.930	-0.322				
		0.960	-0.314				
			Lower Surface				
0.020	-0.916	0.020	-0.101	0.020	-0.081	0.020	-0.316
0.110	0.046	0.060	0.293	0.060	0.287	0.060	-1.968
0.230	-0.014	0.090	0.249	0.090	0.321	0.110	0.289
0.400	0.222	0.120	0.391**	0.120	0.054	0.250	0.154
0.490	0.239	0.200	-0.009	0.200	-0.076	0.400	0.131
0.630	0.999**	0.260	0.224	0.250	0.254	0.490	0.183
0.750	0.247	0.400	0.200	0.400	0.144	0.580	0.190
0.850	0.282	0.490	0.195	0.490	0.009	0.650	0.332
0.900	0.393	0.580	0.234	0.580	0.263	0.750	0.519
0.960	0.160	0.640	0.417	0.650	0.022	0.830	0.575
		0.750	0.472	0.750	-0.180**	0.900	0.636
		0.870	0.533	0.890	0.592	0.960	0.445
		0.930	0.420	0.930	0.477		
		0.960	0.276	0.960	0.639		
CN =	0.697		0.932		0.844		0.918

Table I-2. Continued.

Flight 201, Wing sweep = 9°, Time = 9-56-19-500, MINF = 0.289, Camber = 20/18, ALPT = 8.02, BETA = 0.74, QINF = 105.5, RNPU = 2.1E+06, CNWP = 0.6455

η = 0.93		0.76		0.59		0.40	
			Upper Surface				
x/c	CP	*x/c*	CP	*x/c*	CP	*x/c*	CP
0.020	0.484	0.000	-0.019	0.000	1.915**	0.010	-0.024
0.060	-0.249	0.020	0.195	0.020	0.239	0.020	-0.249**
0.110	-0.792	0.040	0.116	0.060	1.680**	0.060	-1.496**
0.200	-0.858	0.060	-0.949	0.090	-1.534	0.110	-2.296
0.230	-0.752	0.090	-1.335	0.110	-2.153	0.140	-1.501
0.400	-0.509	0.130	-1.814	0.130	-2.137	0.190	********
0.490	-0.442	0.150	-1.937	0.150	-1.436	0.250	-0.844
0.590	-0.630	0.200	-1.222	0.210	-1.141	0.400	-0.656
0.630	-0.684	0.250	-0.930	0.250	-0.774	0.490	-0.580
0.700	-0.896	0.260	-0.754	0.340	-0.753	0.580	-0.500
0.750	-1.122	0.280	-0.840	0.370	-0.752	0.650	-0.622
0.810	-1.054	0.290	-0.790	0.400	-0.682	0.700	-0.541
0.840	-1.162	0.310	-0.751	0.410	-0.664	0.750	-0.691
0.900	-0.476	0.320	-0.733	0.430	-0.694	0.800	-0.611
0.960	-0.460	0.340	-0.704	0.440	-0.647	0.830	-0.570
		0.350	-0.460**	0.460	-0.035	0.900	-0.401
		0.370	-0.699	0.490	-0.592	0.960	-0.326**
		0.380	-0.763	0.500	-0.645		
		0.400	-0.641	0.520	-0.641		
		0.410	-0.688	0.540	-0.657		
		0.430	-0.701	0.550	-0.699		
		0.440	-0.575	0.580	-0.633		
		0.460	-0.674	0.600	-0.748		
		0.470	-0.697	0.610	-0.699		
		0.490	-0.694	0.650	0.105**		
		0.500	-0.637	0.700	-0.888		
		0.520	-0.702	0.750	-1.023		
		0.530	-0.651	0.820	-0.475		
		0.550	-0.651	0.890	-0.416		
		0.560	-0.710	0.900	-0.385		
		0.580	-0.652	0.960	-0.340		
		0.590	-0.779				
		0.600	-0.793				
		0.640	-0.833				
		0.700	-0.991				
		0.750	0.066**				
		0.820	-0.818				
		0.870	-0.365				
		0.930	-0.418				
		0.960	-0.438				
			Lower Surface				
0.020	-0.869	0.020	0.151	0.020	0.113	0.020	0.056
0.110	0.232	0.060	0.372	0.060	0.485	0.060	-2.601
0.230	-0.017	0.090	0.372	0.090	0.473	0.110	0.435
0.400	0.306	0.120	0.517**	0.120	0.127	0.250	0.258
0.490	0.329	0.200	-0.020	0.200	-0.123	0.400	0.263
0.630	0.917**	0.260	0.309	0.250	0.371	0.490	0.253
0.750	0.330	0.400	0.288	0.400	0.246	0.580	0.228
0.850	0.356	0.490	0.299	0.490	0.093	0.650	0.362
0.900	0.536	0.580	0.291	0.580	0.321	0.750	0.557
0.960	0.212	0.640	0.478	0.650	-0.282	0.830	0.612
		0.750	0.534	0.750	-0.019**	0.900	0.721
		0.870	0.633	0.890	0.669	0.960	0.463
		0.930	0.474	0.930	0.550		
		0.960	0.318	0.960	0.868		
CN =	0.909		1.146		0.999		0.961

Table I-2. Continued.

Flight 201, Wing sweep = 9°, Time = 9-56-58-000, MINF = 0.280, Camber = 20/18, ALPT = 8.98, BETA = 1.35, QINF = 101.7, RNPU = 2.1E+06, CNWP = 0.8802

η = 0.93		0.76		0.59		0.40	
			Upper Surface				
x/c	CP	*x/c*	CP	*x/c*	CP	*x/c*	CP
0.020	0.412	0.000	0.396	0.000	2.013**	0.010	-0.346
0.060	-0.342	0.020	-0.035	0.020	0.063	0.020	-0.415**
0.110	-0.896	0.040	-0.024	0.060	1.678**	0.060	-1.812**
0.200	-0.900	0.060	-1.140	0.090	-1.686	0.110	-2.441
0.230	-0.780	0.090	-1.550	0.110	-2.312	0.140	-1.623
0.400	-0.534	0.130	-2.029	0.130	-2.328	0.190	********
0.490	-0.494	0.150	-2.077	0.150	-1.627	0.250	-0.848
0.590	-0.660	0.200	-1.347	0.210	-1.251	0.400	-0.653
0.630	-0.705	0.250	-0.975	0.250	-0.899	0.490	-0.602
0.700	-0.891	0.260	-0.836	0.340	-0.798	0.580	-0.553
0.750	-1.177	0.280	-0.869	0.370	-0.799	0.650	-0.677
0.810	-1.127	0.290	-0.818	0.400	-0.702	0.700	-0.626
0.840	-1.218	0.310	-0.789	0.410	-0.747	0.750	-0.776
0.900	-0.474	0.320	-0.786	0.430	-0.777	0.800	-0.709
0.960	-0.491	0.340	-0.763	0.440	-0.674	0.830	-0.725
		0.350	-0.450**	0.460	-0.025	0.900	-0.308
		0.370	-0.719	0.490	-0.627	0.960	-0.216**
		0.380	-0.805	0.500	-0.710		
		0.400	-0.638	0.520	-0.678		
		0.410	-0.746	0.540	-0.654		
		0.430	-0.665	0.550	-0.698		
		0.440	-0.610	0.580	-0.681		
		0.460	-0.713	0.600	-0.749		
		0.470	-0.714	0.610	-0.698		
		0.490	-0.693	0.650	0.096**		
		0.500	-0.713	0.700	-0.872		
		0.520	-0.678	0.750	-1.042		
		0.530	-0.647	0.820	-0.457		
		0.550	-0.742	0.890	-0.445		
		0.560	-0.709	0.900	-0.381		
		0.580	-0.670	0.960	-0.233		
		0.590	-0.834				
		0.600	-0.780				
		0.640	-0.817				
		0.700	-0.957				
		0.750	0.044**				
		0.820	-0.817				
		0.870	-0.340				
		0.930	-0.362				
		0.960	-0.384				
			Lower Surface				
0.020	-0.213	0.020	0.266	0.020	0.259	0.020	0.274
0.110	0.346	0.060	0.513	0.060	0.609	0.060	-2.638
0.230	0.032	0.090	0.447	0.090	0.546	0.110	0.479
0.400	0.345	0.120	0.564**	0.120	0.160	0.250	0.333
0.490	0.325	0.200	0.006	0.200	-0.090	0.400	0.280
0.630	0.503**	0.260	0.348	0.250	0.423	0.490	0.334
0.750	0.359	0.400	0.326	0.400	0.311	0.580	0.238
0.850	0.385	0.490	0.296	0.490	0.042	0.650	0.414
0.900	0.542	0.580	0.318	0.580	0.381	0.750	0.591
0.960	0.211	0.640	0.501	0.650	0.061	0.830	0.650
		0.750	0.557	0.750	-0.003**	0.900	0.717
		0.870	0.684	0.890	0.711	0.960	0.501
		0.930	0.530	0.930	0.546		
		0.960	0.336	0.960	0.963		
CN =	0.983		1.222		1.131		1.034

Table I-2. Continued.

Flight 222, Wing sweep = 16°, Time = 12-20-11-500, MINF = 0.306, Camber = 20/18, ALPT = 10.03, BETA = 1.03, QINF = 95.6, RNPU = 1.8E+06, CNWP = 0.6852

η = 0.93		0.76		0.59		0.40	
			Upper Surface				
x/c	CP	*x/c*	CP	*x/c*	CP	*x/c*	CP
0.020	0.314	0.000	0.605	0.000	1.679**	0.010	-0.410
0.060	-0.497	0.020	0.008	0.020	-0.131	0.020	-0.516
0.110	-1.425	0.040	-0.466	0.060	********	0.060	-1.870
0.200	-1.071	0.060	-1.286	0.090	-1.933	0.110	-2.424
0.230	-0.817	0.090	-1.696	0.110	-2.506	0.140	-1.633
0.400	-0.595	0.130	-2.213	0.130	-2.588	0.190	********
0.490	-0.588	0.150	-2.208	0.150	-1.646	0.250	-0.802
0.590	-0.728	0.200	-1.489	0.210	-1.420	0.400	-0.681
0.630	-0.751	0.250	-1.052	0.250	-0.896	0.490	-0.567
0.700	-0.975	0.260	-0.942	0.340	-0.923	0.580	-0.564
0.750	-1.205	0.280	-0.972	0.370	-0.899	0.650	-0.763
0.810	-1.161	0.290	-0.944	0.400	-0.774	0.700	-0.707
0.840	-1.207	0.310	-0.884	0.410	********	0.750	-0.762
0.900	-0.539	0.320	-0.883	0.430	-0.858	0.800	-0.763
0.960	-0.574	0.340	-0.864	0.440	-0.791	0.830	-0.731
		0.350	-0.553**	0.460	-0.813	0.900	-0.402
		0.370	-0.736	0.490	-0.647	0.960	-0.278
		0.380	-0.887	0.500	-0.829		
		0.400	-0.890	0.520	-0.805		
		0.410	-0.838	0.540	-0.813		
		0.430	-0.746	0.550	-0.682		
		0.440	-0.665	0.580	-0.634		
		0.460	-0.795	0.600	-0.833		
		0.470	-0.773	0.610	-0.733		
		0.490	-0.724	0.650	-2.573**		
		0.500	-0.748	0.700	-0.898		
		0.520	-0.747	0.750	-1.102		
		0.530	-0.707	0.820	-1.044		
		0.550	-0.807	0.890	-0.434		
		0.560	-0.809	0.900	-0.396		
		0.580	-0.766	0.960	-0.344		
		0.590	-0.933				
		0.600	-0.796				
		0.640	-0.839				
		0.700	-0.989				
		0.750	-0.140**				
		0.820	-0.684				
		0.870	-0.379				
		0.930	-0.413				
		0.960	-0.449				
			Lower Surface				
0.020	-0.051	0.020	0.275	0.020	0.446	0.020	0.357
0.110	0.336	0.060	0.507	0.060	0.573	0.060	-3.481**
0.230	-0.052	0.090	0.411	0.090	-0.590**	0.110	0.689
0.400	0.246	0.120	0.434	0.120	0.337	0.250	0.301
0.490	0.341	0.200	-0.091	0.200	-0.096	0.400	0.270
0.630	4.488**	0.260	0.386	0.250	0.410	0.490	0.293
0.750	0.259	0.400	0.284	0.400	0.182	0.580	0.222
0.850	0.372	0.490	0.253	0.490	-0.032	0.650	0.436
0.900	0.418	0.580	0.409	0.580	0.377	0.750	0.495
0.960	0.189	0.640	0.470	0.650	-0.211	0.830	0.670
		0.750	0.570	0.750	0.085	0.900	0.670
		0.870	0.625	0.890	0.580	0.960	0.441
		0.930	0.478	0.930	0.504		
		0.960	0.283	0.960	********		
CN =	1.028		1.277		1.161		1.235

Table I-2. Continued.

Flight 222, Wing sweep = 16°, Time = 12-20-15-000, MINF = 0.304, Camber = 20/18, ALPT = 9.97, BETA = 0.72, QINF = 94.6, RNPU = 1.8E+06, CNWP = 0.6993

η = 0.93		0.76		0.59		0.40	
			Upper Surface				
x/c	CP	*x/c*	CP	*x/c*	CP	*x/c*	CP
0.020	0.310	0.000	0.580	0.000	1.709**	0.010	-0.479
0.060	-0.505	0.020	-0.084	0.020	-0.216	0.020	-0.553
0.110	-0.668	0.040	-0.491	0.060	********	0.060	-1.789
0.200	-1.074	0.060	-1.332	0.090	-2.002	0.110	-2.451
0.230	-0.682	0.090	-1.719	0.110	-2.536	0.140	-1.597
0.400	-0.610	0.130	-2.268	0.130	-2.610	0.190	********
0.490	-0.603	0.150	-2.237	0.150	-1.669	0.250	-0.842
0.590	-0.854	0.200	-1.519	0.210	-1.423	0.400	-0.698
0.630	-0.791	0.250	-1.095	0.250	-0.937	0.490	-0.605
0.700	-1.017	0.260	-0.940	0.340	-0.965	0.580	-0.569
0.750	-1.225	0.280	-0.986	0.370	-0.841	0.650	-0.803
0.810	-1.160	0.290	-0.959	0.400	-0.791	0.700	-0.746
0.840	-1.252	0.310	-0.925	0.410	********	0.750	-0.790
0.900	-0.553	0.320	-0.910	0.430	-0.899	0.800	-0.804
0.960	-0.612	0.340	-0.905	0.440	-0.832	0.830	-0.713
		0.350	-0.608**	0.460	-0.836	0.900	-0.410
		0.370	-0.753	0.490	-0.686	0.960	-0.288
		0.380	-0.914	0.500	-0.870		
		0.400	-0.932	0.520	-0.898		
		0.410	-0.868	0.540	-0.854		
		0.430	-0.785	0.550	-0.721		
		0.440	-0.723	0.580	-0.672		
		0.460	-0.798	0.600	-0.874		
		0.470	-0.793	0.610	-0.772		
		0.490	-0.739	0.650	-2.588**		
		0.500	-0.753	0.700	-0.928		
		0.520	-0.787	0.750	-1.134		
		0.530	-0.746	0.820	-1.074		
		0.550	-0.847	0.890	-0.458		
		0.560	-0.889	0.900	-0.483		
		0.580	-0.785	0.960	-0.335		
		0.590	-0.905				
		0.600	-0.837				
		0.640	-0.859				
		0.700	-1.008				
		0.750	-0.174**				
		0.820	-0.628				
		0.870	-0.392				
		0.930	-0.426				
		0.960	-0.427				
			Lower Surface				
0.020	-0.084	0.020	0.234	0.020	0.419	0.020	0.328
0.110	0.307	0.060	0.480	0.060	0.547	0.060	-3.505**
0.230	-0.097	0.090	0.392	0.090	-0.583**	0.110	0.664
0.400	0.216	0.120	0.522	0.120	0.282	0.250	0.272
0.490	0.324	0.200	-0.123	0.200	-0.151	0.400	0.241
0.630	4.503**	0.260	0.359	0.250	0.359	0.490	0.252
0.750	0.230	0.400	0.267	0.400	0.241	0.580	0.224
0.850	0.332	0.490	0.212	0.490	-0.019	0.650	0.385
0.900	0.416	0.580	0.402	0.580	0.326	0.750	0.453
0.960	0.146	0.640	0.419	0.650	-0.245	0.830	0.645
		0.750	0.544	0.750	0.054	0.900	0.626
		0.870	0.570	0.890	0.554	0.960	0.413
		0.930	0.439	0.930	0.477		
		0.960	0.254	0.960	********		
CN =	0.961		1.271		1.174		1.221

Table I-2. Continued.

Flight 222, Wing sweep = 16°, Time = 12-21-25-000, MINF = 0.295, Camber = 20/18, ALPT = 10.05, BETA = 1.21, QINF = 89.3, RNPU = 1.7E+06, CNWP = 0.6392

η = 0.93		0.76		0.59		0.40	
			Upper Surface				
x/c	CP	*x/c*	CP	*x/c*	CP	*x/c*	CP
0.020	0.332	0.000	0.616	0.000	1.745**	0.010	-0.408
0.060	-0.505	0.020	-0.059	0.020	-0.192	0.020	-0.556
0.110	-1.142	0.040	-0.442	0.060	********	0.060	-1.795
0.200	-1.065	0.060	-1.329	0.090	-1.933	0.110	-2.401
0.230	-0.802	0.090	-1.674	0.110	-2.473	0.140	-1.572
0.400	-0.591	0.130	-2.197	0.130	-2.576	0.190	********
0.490	-0.423	0.150	-2.190	0.150	-1.681	0.250	-0.769
0.590	-0.771	0.200	-1.484	0.210	-1.383	0.400	-0.662
0.630	-0.769	0.250	-1.023	0.250	-0.902	0.490	-0.579
0.700	-0.984	0.260	-0.920	0.340	-0.989	0.580	-0.537
0.750	-1.202	0.280	-0.986	0.370	-0.861	0.650	-0.752
0.810	-1.174	0.290	-0.927	0.400	-0.833	0.700	-0.726
0.840	-1.221	0.310	-0.896	0.410	********	0.750	-0.746
0.900	-0.573	0.320	-0.889	0.430	-0.871	0.800	-0.751
0.960	-0.547	0.340	-0.883	0.440	-0.782	0.830	-0.695
		0.350	-0.578**	0.460	-0.818	0.900	-0.374
		0.370	-0.731	0.490	-0.621	0.960	-0.275
		0.380	-0.891	0.500	-0.860		
		0.400	-1.104	0.520	-0.865		
		0.410	-0.846	0.540	-0.876		
		0.430	-0.763	0.550	-0.692		
		0.440	-0.684	0.580	-0.623		
		0.460	-0.815	0.600	-0.814		
		0.470	-0.679	0.610	-0.743		
		0.490	-0.712	0.650	-2.805**		
		0.500	-0.767	0.700	-0.940		
		0.520	-0.777	0.750	-1.157		
		0.530	-0.713	0.820	-1.065		
		0.550	-0.867	0.890	-0.428		
		0.560	-0.828	0.900	-0.428		
		0.580	-0.757	0.960	-0.301		
		0.590	-0.913				
		0.600	-0.807				
		0.640	-0.835				
		0.700	-1.001				
		0.750	-0.142**				
		0.820	-0.610				
		0.870	-0.348				
		0.930	-0.397				
		0.960	-0.410				
			Lower Surface				
0.020	0.008	0.020	0.255	0.020	0.421	0.020	0.378
0.110	0.286	0.060	0.513	0.060	0.565	0.060	-3.777**
0.230	-0.073	0.090	0.416	0.090	-0.666**	0.110	0.665
0.400	0.221	0.120	0.559	0.120	0.314	0.250	0.307
0.490	0.386	0.200	-0.089	0.200	-0.129	0.400	0.260
0.630	4.722**	0.260	0.385	0.250	0.398	0.490	0.297
0.750	0.261	0.400	0.240	0.400	0.205	0.580	0.233
0.850	0.355	0.490	0.241	0.490	-0.085	0.650	0.438
0.900	0.461	0.580	0.473	0.580	0.350	0.750	0.494
0.960	0.185	0.640	0.474	0.650	-0.230	0.830	0.638
		0.750	0.503	0.750	0.074	0.900	0.672
		0.870	0.541	0.890	0.593	0.960	0.381
		0.930	0.434	0.930	0.510		
		0.960	0.274	0.960	********		
CN =	1.006		1.258		1.164		1.207

Table I-2. Concluded.

Flight 222, Wing sweep = 16°, Time = 12-22-23-000, MINF = 0.285, Camber = 20/18, ALPT = 11.58, BETA = 0.83, QINF = 83.3, RNPU = 1.7E+06, CNWP = 0.7351

η = 0.93		0.76		0.59		0.40	
			Upper Surface				
x/c	CP	*x/c*	CP	*x/c*	CP	*x/c*	CP
0.020	0.059	0.000	0.875	0.000	1.885**	0.010	-0.877
0.060	-0.783	0.020	-0.512	0.020	-0.596	0.020	-0.785
0.110	-1.554	0.040	-0.880	0.060	********	0.060	-2.115
0.200	-1.227	0.060	-1.743	0.090	-2.300	0.110	-2.579
0.230	-0.848	0.090	-2.022	0.110	-2.804	0.140	-1.725
0.400	-0.700	0.130	-2.537	0.130	-2.836	0.190	********
0.490	-0.652	0.150	-2.476	0.150	-1.964	0.250	-0.864
0.590	-0.866	0.200	-1.671	0.210	-1.540	0.400	-0.724
0.630	-0.850	0.250	-1.182	0.250	-0.993	0.490	-0.592
0.700	-1.067	0.260	-1.050	0.340	-0.994	0.580	-0.540
0.750	-1.314	0.280	-1.045	0.370	-0.962	0.650	-0.736
0.810	-1.273	0.290	-1.033	0.400	-0.693	0.700	-0.618
0.840	-1.321	0.310	-0.949	0.410	********	0.750	-0.629
0.900	-0.581	0.320	-1.009	0.430	-0.920	0.800	-0.682
0.960	-0.651	0.340	-0.986	0.440	-0.840	0.830	-0.621
		0.350	-0.640**	0.460	-0.877	0.900	-0.473
		0.370	-0.822	0.490	-0.677	0.960	-0.275
		0.380	-0.962	0.500	-0.844		
		0.400	-1.065	0.520	-0.906		
		0.410	-0.924	0.540	-0.878		
		0.430	-0.807	0.550	-0.687		
		0.440	-0.751	0.580	-0.897		
		0.460	-0.849	0.600	-0.869		
		0.470	-0.837	0.610	-0.787		
		0.490	-0.789	0.650	-2.998**		
		0.500	-0.862	0.700	-0.955		
		0.520	-0.705	0.750	-1.136		
		0.530	-0.778	0.820	-0.999		
		0.550	-0.838	0.890	-0.441		
		0.560	-0.854	0.900	-0.422		
		0.580	-0.827	0.960	-0.361		
		0.590	-0.971				
		0.600	-0.904				
		0.640	-0.875				
		0.700	-1.020				
		0.750	-0.166**				
		0.820	-0.625				
		0.870	-0.386				
		0.930	-0.424				
		0.960	-0.400				
			Lower Surface				
0.020	-0.174	0.020	0.373	0.020	0.581	0.020	0.504
0.110	0.343	0.060	0.525	0.060	0.662	0.060	-4.040**
0.230	-0.117	0.090	0.439	0.090	-0.702**	0.110	0.748
0.400	0.252	0.120	0.508	0.120	0.313	0.250	0.314
0.490	0.348	0.200	-0.121	0.200	-0.177	0.400	0.293
0.630	5.028**	0.260	0.388	0.250	0.452	0.490	0.293
0.750	0.213	0.400	0.270	0.400	0.217	0.580	0.211
0.850	0.301	0.490	0.220	0.490	-0.029	0.650	0.404
0.900	0.417	0.580	0.371	0.580	0.364	0.750	0.474
0.960	0.130	0.640	0.443	0.650	-0.234	0.830	0.666
		0.750	0.523	0.750	0.041	0.900	0.640
		0.870	0.575	0.890	0.596	0.960	0.399
		0.930	0.440	0.930	0.506		
		0.960	0.229	0.960	********		
CN =	1.119		1.356		1.249		1.269

APPENDIX J

Wing Pressure Coefficients for Dynamic Pressures From 250 to 800 lb/ft^2 and Mach Numbers From 0.60 to 0.90.

Leading-edge wing sweep is 26° unless otherwise indicated at flight number. Table J-1 contains a summary of the data listing in table J-2. The asterisks (*) in table J-2 indicate invalid values. Flight 228 and Flight 231 have less data in two upper rows because the pressure transducers were used for boundary-layer data. Camber is $\delta_{LE/TE}$. Refer to Nomenclature for definitions.

Table J-1. Summary of data.

Flight	Time	MINF	Camber	ALPT	BETA	QINF	RNPU	CNWP
228	12-45-12-500	0.610	0/2	7.10	0.11	312.0	3.2E+06	0.1939
228	12-45-16-500	0.602	0/2	8.10	0.14	304.7	3.1E+06	0.2266
228	12-45-22-000	0.608	0/2	10.21	-0.01	309.5	3.1E+06	0.2434
228	12-45-24-500	0.606	0/2	12.01	0.54	307.8	3.1E+06	0.2957
228	12-45-28-000	0.598	0/2	13.04	0.83	299.6	3.1E+06	0.3296
228	12-45-37-500	0.594	0/2	12.03	-0.44	296.6	3.1E+06	0.2431
228	12-45-59-000	0.602	0/2	13.00	0.60	299.3	3.1E+06	0.2755
228	12-46-32-500	0.595	0/2	13.06	-0.88	296.2	3.1E+06	0.3285
228	12-48-50-000	0.605	3/5	6.70	0.77	304.5	3.1E+06	0.3074
228	12-48-55-000	0.627	4/7	8.30	-0.76	326.1	3.2E+06	0.3554
228	12-48-57-500	0.638	6/9	10.11	-0.12	336.8	3.3E+06	0.4391
228	12-49-1-000	0.635	8/12	11.43	-0.41	330.8	3.2E+06	0.5211
228	12-49-10-500	0.611	9/14	12.02	0.48	301.9	3.0E+06	0.5898
228	12-49-12-500	0.606	10/17	13.08	-0.91	296.9	3.0E+06	0.7796
228	12-49-20-500	0.581	9/13	11.28	-0.59	272.0	2.9E+06	0.5458
228	12-49-41-500	0.595	8/12	11.16	-0.30	286.1	2.9E+06	0.5101
228	12-50-6-500	0.604	8/13	11.15	-0.44	292.2	3.0E+06	0.5446
228	12-50-15-000	0.612	8/12	11.12	-0.56	301.0	3.0E+06	0.4970
228	12-50-17-000	0.622	5/7	7.05	1.03	310.6	3.1E+06	0.3478
223	10-23-15-500	0.695	2/4	5.30	0.40	294.8	2.7E+06	0.2553
223	10-23-23-000	0.696	2/4	5.09	0.43	295.9	2.7E+06	0.2613
223	10-23-23-500	0.696	1/4	4.60	0.40	296.2	2.7E+06	0.2330
223	10-23-26-000	0.699	1/3	3.14	0.45	299.2	2.7E+06	0.1724
223	10-23-30-500	0.713	0/3	3.72	0.54	315.6	2.8E+06	0.1549
223	10-23-33-000	0.724	1/4	6.08	0.51	328.8	2.9E+06	0.2425
223	10-23-34-000	0.726	2/5	7.32	0.37	332.3	2.9E+06	0.3374
223	10-23-36-000	0.725	4/7	9.06	0.40	333.5	2.9E+06	0.4253
223	10-23-39-500	0.700	6/9	11.08	0.60	308.1	2.8E+06	0.4649

Table J-1. Continued.

Flight	Time	MINF	Camber	ALPT	BETA	QINF	RNPU	CNWP
223	10-23-41-500	0.674	7/10	11.66	0.57	282.0	2.6E+06	0.4807
220	9-36-44-000	0.803	1/4	5.09	-0.38	303.4	2.5E+06	
220	9-37-0-000	0.803	3/6	8.12	-0.18	311.0	2.5E+06	
220	9-37-4-500	0.793	5/8	11.01	-1.54	311.8	2.6E+06	
220	9-37-6-500	0.781	6/11	12.94	0.43	308.5	2.6E+06	
220	9-37-10-500	0.778	5/8	9.12	-0.33	318.7	2.7E+06	
220	9-37-14-000	0.788	3/6	7.20	0.57	333.9	2.8E+06	
226	8-42-6-000	0.801	5/10	3.03	0.31	604.6	5.0E+06	0.2071
226	8-42-43-000	0.804	5/10	3.03	0.19	607.5	5.0E+06	0.2073
226	8-43-5-500	0.801	5/10	3.89	0.40	603.9	5.0E+06	0.2690
226	8-43-13-000	0.810	5/10	6.01	0.66	615.0	5.0E+06	0.3171
226	8-43-17-000	0.804	5/6	6.97	0.74	605.8	5.0E+06	0.3917
226	8-43-22-500	0.790	5/-1	8.20	0.83	577.9	4.8E+06	0.4390
226	8-43-29-000	0.791	5/-1	8.04	0.66	573.9	4.8E+06	0.4273
220	9-43-0-000	0.801	1/4	5.00	0.02	297.8	2.4E+06	
220	9-43-15-000	0.805	1/5	6.23	-0.44	303.0	2.5E+06	
220	9-43-16-000	0.805	2/5	6.96	-0.27	304.6	2.5E+06	
220	9-43-18-000	0.806	3/7	8.04	-0.50	307.9	2.5E+06	
220	9-43-19-000	0.806	3/2	9.05	-0.30	309.7	2.5E+06	
220	9-43-20-000	0.805	4/-1	10.12	-0.56	311.3	2.5E+06	
220	9-43-21-000	0.804	5/-1	11.12	-0.59	312.7	2.6E+06	
220	9-43-22-500	0.799	6/-1	13.15	-0.56	313.5	2.6E+06	
220	9-43-25-000	0.794	7/-1	13.18	2.31	319.4	2.6E+06	
220	9-43-28-000	0.810	3/6	6.18	-0.56	348.7	2.8E+06	
221	13-15-18-000	0.859	5/10	3.98	0.22	303.4	2.4E+06	0.3052
221	13-15-22-500	0.864	5/10	5.10	0.14	307.9	2.4E+06	0.3560
221	13-15-29-500	0.864	5/10	6.05	0.19	309.6	2.4E+06	0.3875
221	13-15-34-000	0.861	5/10	7.05	0.31	308.5	2.4E+06	0.4677
221	13-15-37-500	0.858	5/10	8.16	0.02	307.9	2.4E+06	0.5349
221	13-15-38-000	0.857	5/9	8.41	0.08	307.7	2.4E+06	0.5392
221	13-15-38-500	0.857	5/7	8.88	0.43	307.8	2.4E+06	0.5397
221	13-15-39-000	0.856	5/4	9.27	-0.07	307.8	2.4E+06	0.4812
221	13-15-40-000	0.855	5/3	9.57	0.86	307.5	2.4E+06	0.4201
221	13-15-41-500	0.852	5/2	10.29	0.48	307.1	2.4E+06	0.3694
221	13-15-42-000	0.851	5/0	10.90	0.60	307.2	2.4E+06	0.3690
221	13-15-43-000	0.849	5/-1	11.80	0.28	306.8	2.4E+06	0.3500
221	13-15-44-000	0.846	5/-1	12.61	0.14	306.1	2.4E+06	0.2887

Table J-1. Continued.

Flight	Time	MINF	Camber	ALPT	BETA	QINF	RNPU	CNWP
211	9-51-57-500	0.704	5/11	2.15	0.25	605.3	5.5E+06	0.3064
211	9-52-4-000	0.703	5/11	4.19	0.17	604.2	5.5E+06	0.3873
211	9-52-10-500	0.710	5/11	6.26	0.14	611.4	5.5E+06	0.3234
211	9-52-15-000	0.705	5/10	7.10	0.11	601.1	5.4E+06	0.3654
211	9-52-19-500	0.695	5/10	8.26	0.11	582.0	5.3E+06	0.4441
211	9-55-37-500	0.697	5/-1	2.04	0.17	583.0	5.3E+06	0.2090
211	9-55-47-500	0.708	5/-1	6.26	0.28	601.0	5.4E+06	0.3272
211	9-55-51-500	0.712	5/-1	7.06	0.43	606.7	5.4E+06	0.3830
211	9-55-56-500	0.704	5/-1	8.09	0.25	590.5	5.3E+06	0.4400
211	9-55-58-000	0.700	5/-1	8.46	0.25	583.6	5.3E+06	0.4425
211	10-36-20-000	0.802	0/2	4.05	0.66	605.6	5.0E+06	0.1504
225	8-48-5-000	0.801	0/2	4.00	0.45	602.7	4.9E+06	0.1639
225	8-48-22-000	0.800	0/2	5.99	0.34	602.6	5.0E+06	0.2813
223	8-59-41-500	0.797	0/2	4.07	1.09	591.4	4.9E+06	0.1505
223	8-59-54-500	0.803	0/2	5.10	0.77	601.9	4.9E+06	0.2200
223	9-0-1-000	0.808	0/2	6.03	0.86	610.7	5.0E+06	0.2402
223	9-0-7-000	0.806	0/2	7.06	0.86	606.9	5.0E+06	0.2613
223	9-0-16-500	0.801	0/2	8.05	0.80	602.8	4.9E+06	0.3377
223	9-0-22-500	0.807	0/2	8.09	0.74	623.8	5.1E+06	0.3411
223	9-0-30-000	0.800	0/2	9.03	0.69	618.6	5.1E+06	0.4026
223	9-0-35-500	0.795	0/2	10.00	0.74	613.8	5.1E+06	0.3760
211	10-31-44-000	0.796	10/2	4.13	0.63	595.1	4.9E+06	0.2126
211	10-32-11-500	0.800	10/2	5.00	0.28	597.9	4.9E+06	0.2623
211	10-32-18-500	0.791	10/2	6.07	0.37	579.8	4.8E+06	0.2747
211	10-32-35-500	0.809	10/2	7.98	0.74	606.2	4.9E+06	0.4022
211	10-32-37-000	0.812	10/2	8.05	0.54	611.8	5.0E+06	0.4026
223	10-7-25-000	0.691	5/15	3.01	0.66	310.4	2.8E+06	0.3089
223	8-54-32-000	0.812	10/2	4.28	0.57	613.4	5.0E+06	0.1835
223	8-54-38-500	0.804	10/2	5.18	0.72	601.2	4.9E+06	0.2224
223	8-54-44-000	0.801	10/2	6.08	0.63	595.8	4.9E+06	0.2493
223	8-55-1-000	0.804	10/2	9.02	0.66	610.5	5.0E+06	0.4424
223	8-55-3-500	0.793	10/2	9.06	0.69	594.7	4.9E+06	0.3973
223	8-50-5-500	0.801	5/10	2.99	0.83	601.7	4.9E+06	0.1594
223	8-50-31-000	0.802	5/10	5.00	0.69	609.5	5.0E+06	0.2512
223	8-50-40-000	0.810	5/10	6.02	0.69	619.2	5.0E+06	0.2762
223	8-50-45-000	0.804	5/10	7.08	0.57	608.2	5.0E+06	0.3166
223	8-50-49-500	0.789	5/10	8.00	0.57	584.2	4.8E+06	0.3653

Table J-1. Continued.

Flight	Time	MINF	Camber	ALPT	BETA	QINF	RNPU	CNWP
211	10-28-38-500	0.800	5/10	3.03	0.31	601.9	4.9E+06	0.2194
211	10-29-3-500	0.794	5/10	2.93	0.54	593.2	4.9E+06	0.2350
211	10-29-11-500	0.798	5/10	4.10	0.80	597.7	4.9E+06	0.2996
211	10-29-15-500	0.797	5/10	5.15	0.48	595.9	4.9E+06	0.3278
211	10-29-19-000	0.796	5/10	5.95	0.66	593.9	4.9E+06	0.3689
211	10-29-28-500	0.788	5/10	8.13	0.74	582.1	4.8E+06	0.4656
211	9-57-50-000	0.798	5/11	3.16	0.25	786.2	6.5E+06	0.1765
211	9-58-1-500	0.812	5/10	5.23	0.22	811.0	6.6E+06	0.3021
211	9-58-4-500	0.805	5/10	5.81	0.43	793.8	6.5E+06	0.2369
223	9-2-37-500	0.856	0/2	4.02	0.54	595.5	4.7E+06	0.1865
223	9-2-45-000	0.863	0/2	5.21	0.80	605.2	4.7E+06	0.2049
223	9-2-50-000	0.860	0/2	6.06	0.77	600.1	4.7E+06	0.2962
223	9-2-53-500	0.862	0/2	7.29	0.77	603.3	4.7E+06	0.4023
223	9-2-57-500	0.859	0/2	8.07	0.83	601.1	4.7E+06	0.4515
223	9-3-3-500	0.857	0/2	9.22	0.83	606.2	4.8E+06	0.4920
223	9-3-15-000	0.848	0/2	9.91	0.66	610.5	4.8E+06	0.4793
208	15-2-25-000	0.851	0/2	4.10	-0.10	598.2	4.7E+06	0.1806
208	15-2-29-500	0.853	0/2	5.07	0.31	600.8	4.7E+06	0.2395
208	15-2-39-000	0.857	0/2	6.99	0.25	608.5	4.8E+06	0.3620
208	15-2-48-500	0.854	0/2	8.06	0.25	610.5	4.8E+06	0.4296
208	15-2-57-000	0.849	0/2	9.11	0.17	619.4	4.9E+06	0.4840
208	14-57-18-000	0.854	10/2	4.00	0.40	600.1	4.7E+06	0.1731
208	14-57-43-000	0.851	10/2	4.02	0.45	596.3	4.7E+06	0.1775
208	14-57-56-000	0.851	10/2	4.05	0.45	596.3	4.7E+06	0.1789
208	14-58-10-000	0.854	10/2	5.18	0.34	599.8	4.7E+06	0.2939
208	14-58-14-500	0.853	10/2	6.02	0.19	598.6	4.7E+06	0.3008
208	14-58-21-500	0.856	10/2	7.15	0.22	603.1	4.7E+06	0.4154
208	14-58-29-500	0.849	10/2	8.06	0.11	597.3	4.7E+06	0.4509
208	14-58-32-000	0.847	10/2	7.97	0.34	596.2	4.7E+06	0.4603
208	14-58-46-000	0.841	10/2	9.15	0.72	580.5	4.6E+06	0.4966
208	14-58-50-500	0.840	10/2	10.26	0.48	582.8	4.6E+06	0.4567
224	9-10-37-500	0.847	10/2	4.09	0.57	587.1	4.6E+06	0.1963
224	9-11-20-000	0.849	10/2	8.01	0.34	587.7	4.6E+06	0.4529
224	9-11-33-500	0.859	10/2	7.99	0.25	612.7	4.8E+06	0.4575
208	14-52-18-000	0.862	5/10	3.07	0.08	611.4	4.8E+06	0.1502
208	14-53-36-000	0.857	5/10	3.00	0.17	598.7	4.7E+06	0.1234
208	14-54-9-500	0.852	5/10	8.03	0.40	604.5	4.8E+06	0.4939

Table J-1. Concluded.

Flight	Time	MINF	Camber	ALPT	BETA	QINF	RNPU	CNWP
208	14-54-11-000	0.851	5/10	7.93	-0.24	606.5	4.8E+06	0.4625
224	9-7-47-000	0.849	5/10	3.03	0.43	588.2	4.6E+06	0.1959
224	9-8-12-500	0.858	5/11	4.08	0.28	600.7	4.7E+06	0.2656
224	9-8-18-500	0.858	5/11	5.12	0.22	598.5	4.7E+06	0.3537
224	9-8-26-500	0.855	5/10	6.97	0.22	594.5	4.7E+06	0.4279
224	9-8-31-000	0.848	5/10	8.00	0.02	583.5	4.6E+06	0.4797
211	11-53-1-500	0.900	0/2	3.52	0.63	601.5	4.6E+06	0.1955
211	11-53-16-000	0.897	0/3	3.99	-0.04	595.2	4.5E+06	0.2007
211	11-53-20-000	0.898	0/2	4.98	0.57	597.1	4.5E+06	0.2452
211	11-53-26-500	0.897	0/2	7.14	0.28	595.2	4.5E+06	0.3855
211	11-53-30-500	0.897	0/2	8.10	0.19	600.0	4.6E+06	0.4332
211	11-53-32-000	0.902	0/2	8.11	1.18	610.3	4.6E+06	0.4627
211	11-48-2-000	0.901	10/2	4.04	0.63	599.9	4.6E+06	0.2434
211	11-48-23-500	0.892	10/2	5.96	0.34	588.0	4.5E+06	0.3356
211	11-48-28-000	0.895	10/2	7.01	0.25	590.4	4.5E+06	0.3709
211	11-48-29-000	0.897	10/2	7.02	0.34	592.9	4.5E+06	0.3783
211	11-48-36-000	0.902	10/2	7.92	0.40	606.0	4.6E+06	0.4400
211	11-48-38-500	0.905	10/2	8.01	0.40	613.1	4.6E+06	0.4479
211	11-48-46-000	0.908	10/2	9.13	0.19	634.3	4.8E+06	0.4844
211	11-45-23-500	0.896	5/10	3.20	0.17	596.0	4.5E+06	0.1808
211	11-45-51-500	0.899	5/11	4.09	-0.10	596.2	4.5E+06	0.3033
211	11-45-57-000	0.900	5/10	6.03	0.02	594.8	4.5E+06	0.3696
211	11-46-1-000	0.891	5/10	7.16	0.05	580.3	4.4E+06	0.4117
211	11-46-14-500	0.894	5/10	7.99	0.22	628.8	4.8E+06	0.4275
211	11-46-17-000	0.898	5/10	8.05	0.05	650.2	4.9E+06	0.4384
231	13-33-23-000	0.631	7/-1	11.45	-0.27	387.6	3.8E+06	0.4439
211	11-38-33-000	0.850	0/2	5.51	0.08	253.3	2.0E+06	0.2692
211	11-39-16-000	0.850	0/2	5.60	0.11	252.9	2.0E+06	0.2661

Table J-2. Listing of data.

Flight 228, Wing sweep = 26°, Time = 12-45-12-500, MINF = 0.610, Camber = 0/2, ALPT = 7.10, BETA = 0.11, QINF = 312.0, RNPU = 3.2E+06, CNWP = 0.1939

η = 0.93		0.76		0.59		0.40	
			Upper Surface				
x/c	CP	*x/c*	CP	*x/c*	CP	*x/c*	CP
0.020	-0.569	0.000	0.481	0.000	4.765**	0.010	-2.127
0.060	-0.410	0.020	-1.149	0.020	-1.794	0.020	-1.783
0.110	-0.359	0.040	-1.508**	0.060	-2.078**	0.060	-0.837
0.200	-0.240	0.060	-0.670	0.090	-0.610	0.110	-0.605
0.230	-0.241	0.090	-0.479	0.110	-0.582	0.140	-0.561
0.400	-0.198	0.130	-0.487	0.130	-0.518	0.190	-3.845**
0.490	-0.213	0.150	-0.477	0.150	-0.505	0.250	-0.455
0.590	-0.246	0.200	-0.405	0.210	-0.493	0.400	-0.427
0.630	-0.242	0.250	1.773**	0.250	-0.444	0.490	-0.291
0.700	-0.224	0.260	-0.397	0.340	0.454**	0.580	-0.256
0.750	-0.225	0.280	1.748**	0.370	-1.377**	0.650	-0.330
0.810	-0.199	0.290	-0.010**	0.400	-0.360	0.700	-0.285
0.840	-0.209	0.310	1.275**	0.410	-0.180**	0.750	-0.305
0.900	-0.169	0.320	0.994**	0.430	-1.311**	0.800	-0.250
0.960	-0.021	0.340	1.160**	0.440	-0.929**	0.830	-0.233
		0.350	-0.888**	0.460	-0.481**	0.900	-0.155
		0.370	1.183**	0.490	-0.366	0.960	-0.016
		0.380	-0.894**	0.500	0.977**		
		0.400	-0.359	0.520	-1.500**		
		0.410	1.188**	0.540	0.565**		
		0.430	0.760**	0.550	0.749**		
		0.440	-0.298	0.580	-0.237		
		0.460	0.751**	0.600	0.717**		
		0.470	0.618**	0.610	0.608**		
		0.490	-0.280	0.650	3.796**		
		0.500	0.791**	0.700	-0.361		
		0.520	0.435**	0.750	-0.315		
		0.530	-0.298	0.820	-0.272		
		0.550	0.123**	0.890	-0.126		
		0.560	0.682**	0.900	-0.100		
		0.580	-0.283	0.960	-0.010		
		0.590	1.053**				
		0.600	0.981**				
		0.640	-0.311				
		0.700	-0.287				
		0.750	-0.059**				
		0.820	-0.262				
		0.870	-0.051				
		0.930	-0.100				
		0.960	-0.058				
			Lower Surface				
0.020	0.137	0.020	0.257	0.020	0.398	0.020	0.638
0.110	-0.047	0.060	0.154	0.060	0.242	0.060	3.651**
0.230	0.001	0.090	0.084	0.090	2.309**	0.110	0.198
0.400	-0.012	0.120	-0.686**	0.120	0.064	0.250	-0.059
0.490	0.010	0.200	-0.008	0.200	0.061	0.400	-0.073
0.630	1.839**	0.260	-0.015	0.250	-0.038	0.490	-0.095
0.750	-0.017	0.400	-0.049	0.400	-0.096	0.580	-0.153
0.850	0.010	0.490	-0.088	0.490	-0.026	0.650	-0.075
0.900	0.100	0.580	-0.090	0.580	-0.117	0.750	0.106
0.960	0.087	0.640	0.024	0.650	-0.060	0.830	0.253
		0.750	0.158	0.750	-0.018	0.900	0.289
		0.870	0.204	0.890	0.218	0.960	0.220
		0.930	0.138	0.930	0.188		
		0.960	0.110	0.960	-1.684**		
CN =	0.223		0.377		0.348		0.440

Table J-2. Continued.

Flight 228, Wing sweep = 26°, Time = 12-45-16-500, MINF = 0.602, Camber = 0/2, ALPT = 8.10, BETA = 0.14, QINF = 304.7, RNPU = 3.1E+06, CNWP = 0.2266

η = 0.93		0.76		0.59		0.40	
			Upper Surface				
x/c	CP	*x/c*	CP	*x/c*	CP	*x/c*	CP
0.020	-0.786	0.000	0.237	0.000	4.880**	0.010	-2.506
0.060	-0.520	0.020	-2.145	0.020	-2.361	0.020	-2.461
0.110	-0.424	0.040	-1.684**	0.060	-2.126**	0.060	-0.877
0.200	-0.297	0.060	-0.807	0.090	-0.701	0.110	-0.677
0.230	-0.279	0.090	-0.588	0.110	-0.634	0.140	-0.640
0.400	-0.239	0.130	-0.569	0.130	-0.602	0.190	-3.936**
0.490	-0.232	0.150	-0.530	0.150	-0.580	0.250	-0.493
0.590	-0.258	0.200	-0.484	0.210	-0.555	0.400	-0.429
0.630	-0.244	0.250	1.816**	0.250	-0.476	0.490	-0.311
0.700	-0.250	0.260	-0.446	0.340	0.466**	0.580	-0.302
0.750	-0.255	0.280	1.799**	0.370	-1.416**	0.650	-0.322
0.810	-0.217	0.290	-0.010**	0.400	-0.404	0.700	-0.295
0.840	-0.232	0.310	1.292**	0.410	-0.184**	0.750	-0.290
0.900	-0.184	0.320	1.018**	0.430	-1.356**	0.800	-0.228
0.960	-0.049	0.340	1.174**	0.440	-0.951**	0.830	-0.216
		0.350	-0.909**	0.460	-0.501**	0.900	-0.131
		0.370	1.209**	0.490	-0.389	0.960	-0.046
		0.380	-0.914**	0.500	0.987**		
		0.400	-0.313	0.520	-1.535**		
		0.410	1.206**	0.540	0.586**		
		0.430	0.779**	0.550	0.753**		
		0.440	-0.319	0.580	-0.273		
		0.460	0.770**	0.600	0.735**		
		0.470	0.640**	0.610	0.609**		
		0.490	-0.316	0.650	3.887**		
		0.500	0.810**	0.700	-0.362		
		0.520	0.408**	0.750	-0.336		
		0.530	-0.300	0.820	-0.284		
		0.550	0.127**	0.890	-0.127		
		0.560	0.680**	0.900	-0.102		
		0.580	-0.296	0.960	-0.006		
		0.590	1.064**				
		0.600	1.005**				
		0.640	-0.335				
		0.700	-0.297				
		0.750	-0.052**				
		0.820	-0.281				
		0.870	-0.062				
		0.930	-0.112				
		0.960	-0.059				
			Lower Surface				
0.020	0.232	0.020	0.381	0.020	0.516	0.020	0.680
0.110	0.005	0.060	0.244	0.060	0.313	0.060	3.739**
0.230	0.032	0.090	0.149	0.090	2.365**	0.110	0.204
0.400	-0.011	0.120	-0.637**	0.120	0.134	0.250	-0.015
0.490	-0.018	0.200	0.046	0.200	0.093	0.400	-0.038
0.630	1.883**	0.260	0.014	0.250	-0.002	0.490	-0.066
0.750	-0.013	0.400	-0.030	0.400	-0.054	0.580	-0.140
0.850	0.011	0.490	-0.055	0.490	-0.040	0.650	-0.047
0.900	0.093	0.580	-0.083	0.580	-0.083	0.750	0.124
0.960	0.078	0.640	0.040	0.650	-0.061	0.830	0.246
		0.750	0.148	0.750	-0.032	0.900	0.276
		0.870	0.210	0.890	0.231	0.960	0.215
		0.930	0.138	0.930	0.172		
		0.960	0.102	0.960	-1.723**		
CN =	0.264		0.459		0.402		0.497

Table J-2. Continued.

Flight 228, Wing sweep = 26°, Time = 12-45-22-000, MINF = 0.608, Camber = 0/2, ALPT = 10.21, BETA = -0.01, QINF = 309.5, RNPU = 3.1E+06, CNWP = 0.2434

η = 0.93		0.76		0.59		0.40	
			Upper Surface				
x/c	CP	*x/c*	CP	*x/c*	CP	*x/c*	CP
0.020	-1.912	0.000	-0.195	0.000	4.808**	0.010	-2.753
0.060	-0.758	0.020	-2.645	0.020	-2.716	0.020	-2.748
0.110	-0.567	0.040	-1.798**	0.060	-2.089**	0.060	-1.534
0.200	-0.383	0.060	-1.271	0.090	-1.207	0.110	-0.838
0.230	-0.453	0.090	-0.712	0.110	-1.013	0.140	-0.733
0.400	-0.297	0.130	-0.675	0.130	-0.826	0.190	-3.871**
0.490	-0.278	0.150	-0.647	0.150	-0.757	0.250	-0.522
0.590	-0.296	0.200	-0.590	0.210	-0.645	0.400	-0.459
0.630	-0.299	0.250	1.779**	0.250	-0.577	0.490	-0.343
0.700	-0.290	0.260	-0.514	0.340	0.455**	0.580	-0.330
0.750	-0.282	0.280	1.772**	0.370	-1.444**	0.650	-0.318
0.810	-0.259	0.290	-0.009**	0.400	-0.429	0.700	-0.303
0.840	-0.283	0.310	1.268**	0.410	-0.177**	0.750	-0.296
0.900	-0.217	0.320	0.999**	0.430	-1.360**	0.800	-0.240
0.960	-0.085	0.340	1.161**	0.440	-0.958**	0.830	-0.203
		0.350	-0.891**	0.460	-0.521**	0.900	-0.163
		0.370	1.190**	0.490	-0.416	0.960	-0.125
		0.380	-0.877**	0.500	0.980**		
		0.400	-0.375	0.520	-1.542**		
		0.410	1.187**	0.540	0.575**		
		0.430	0.768**	0.550	0.736**		
		0.440	-0.350	0.580	-0.285		
		0.460	0.764**	0.600	0.730**		
		0.470	0.629**	0.610	0.605**		
		0.490	-0.351	0.650	3.831**		
		0.500	0.800**	0.700	-0.317		
		0.520	0.397**	0.750	-0.298		
		0.530	-0.336	0.820	-0.220		
		0.550	0.116**	0.890	-0.092		
		0.560	0.676**	0.900	-0.085		
		0.580	-0.312	0.960	-0.011		
		0.590	1.062**				
		0.600	0.993**				
		0.640	-0.331				
		0.700	-0.285				
		0.750	-0.033**				
		0.820	-0.259				
		0.870	-0.040				
		0.930	-0.085				
		0.960	-0.054				
			Lower Surface				
0.020	0.368	0.020	0.556	0.020	0.639	0.020	0.770
0.110	0.093	0.060	0.378	0.060	0.396	0.060	3.685**
0.230	0.086	0.090	0.261	0.090	2.332**	0.110	0.346
0.400	0.000	0.120	-0.536**	0.120	0.249	0.250	0.079
0.490	0.015	0.200	0.141	0.200	0.188	0.400	0.023
0.630	1.865**	0.260	0.094	0.250	0.087	0.490	-0.011
0.750	-0.010	0.400	0.018	0.400	-0.011	0.580	-0.091
0.850	0.007	0.490	-0.014	0.490	-0.014	0.650	-0.014
0.900	0.088	0.580	-0.053	0.580	-0.050	0.750	0.140
0.960	0.067	0.640	0.061	0.650	-0.042	0.830	0.248
		0.750	0.164	0.750	-0.014	0.900	0.272
		0.870	0.198	0.890	0.224	0.960	0.181
		0.930	0.133	0.930	0.166		
		0.960	0.101	0.960	-1.692**		
CN =	0.366		0.565		0.511		0.619

Table J-2. Continued.

Flight 228, Wing sweep = 26°, Time = 12-45-24-500, MINF = 0.606, Camber = 0/2, ALPT = 12.01, BETA = 0.54, QINF = 307.8, RNPU = 3.1E+06, CNWP = 0.2957

η = 0.93		0.76		0.59		0.40	
			Upper Surface				
x/c	CP	*x/c*	CP	*x/c*	CP	*x/c*	CP
0.020	-1.650	0.000	-0.438	0.000	4.836**	0.010	-2.156
0.060	-1.310	0.020	-2.178	0.020	-1.837	0.020	-2.112
0.110	-0.872	0.040	-1.807**	0.060	-2.099**	0.060	-1.632
0.200	-0.470	0.060	-1.307	0.090	-1.273	0.110	-1.357
0.230	-0.436	0.090	-1.067	0.110	-1.182	0.140	-1.082
0.400	-0.348	0.130	-0.982	0.130	-1.077	0.190	-3.891**
0.490	-0.332	0.150	-0.897	0.150	-1.079	0.250	-0.728
0.590	-0.326	0.200	-0.819	0.210	-0.945	0.400	-0.555
0.630	-0.326	0.250	1.791**	0.250	-0.889	0.490	-0.426
0.700	-0.305	0.260	-0.648	0.340	0.459**	0.580	-0.361
0.750	-0.267	0.280	1.784**	0.370	-1.535**	0.650	-0.383
0.810	-0.251	0.290	-0.033**	0.400	-0.545	0.700	-0.363
0.840	-0.276	0.310	1.274**	0.410	-0.176**	0.750	-0.353
0.900	-0.214	0.320	1.001**	0.430	-1.454**	0.800	-0.280
0.960	-0.101	0.340	1.162**	0.440	-1.042**	0.830	-0.256
		0.350	-0.894**	0.460	-0.606**	0.900	-0.242
		0.370	1.195**	0.490	-0.512	0.960	-0.207
		0.380	-0.885**	0.500	0.978**		
		0.400	-0.471	0.520	-1.631**		
		0.410	1.192**	0.540	0.580**		
		0.430	0.769**	0.550	0.741**		
		0.440	-0.426	0.580	-0.319		
		0.460	0.759**	0.600	0.735**		
		0.470	0.628**	0.610	0.609**		
		0.490	-0.386	0.650	3.853**		
		0.500	0.811**	0.700	-0.335		
		0.520	0.408**	0.750	-0.313		
		0.530	-0.371	0.820	-0.236		
		0.550	0.119**	0.890	-0.133		
		0.560	0.681**	0.900	-0.151		
		0.580	-0.338	0.960	-0.075		
		0.590	1.047**				
		0.600	0.986**				
		0.640	-0.266				
		0.700	-0.252				
		0.750	-0.039**				
		0.820	-0.197				
		0.870	-0.038				
		0.930	-0.134				
		0.960	-0.113				
			Lower Surface				
0.020	0.465	0.020	0.635	0.020	0.727	0.020	0.794
0.110	0.153	0.060	0.451	0.060	0.523	0.060	3.707**
0.230	0.110	0.090	0.329	0.090	2.346**	0.110	0.448
0.400	0.019	0.120	-0.470**	0.120	0.331	0.250	0.145
0.490	0.031	0.200	0.196	0.200	0.262	0.400	0.074
0.630	1.873**	0.260	0.153	0.250	0.146	0.490	0.027
0.750	-0.019	0.400	0.053	0.400	0.019	0.580	-0.070
0.850	-0.010	0.490	0.002	0.490	-0.012	0.650	-0.005
0.900	0.061	0.580	-0.040	0.580	-0.031	0.750	0.147
0.960	0.040	0.640	0.059	0.650	-0.040	0.830	0.247
		0.750	0.150	0.750	-0.012	0.900	0.264
		0.870	0.182	0.890	0.206	0.960	0.154
		0.930	0.093	0.930	0.140		
		0.960	0.050	0.960	-1.700**		
CN =	0.452		0.635		0.643		0.754

Table J-2. Continued.

Flight 228, Wing sweep = 26°, Time = 12-45-28-000, MINF = 0.598, Camber = 0/2, ALPT = 13.04, BETA = 0.83, QINF = 299.6, RNPU = 3.1E+06, CNWP = 0.3296

η = 0.93		0.76		0.59		0.40	
			Upper Surface				
x/c	CP	*x/c*	CP	*x/c*	CP	*x/c*	CP
0.020	-1.855	0.000	-0.578	0.000	4.969**	0.010	-2.304
0.060	-1.387	0.020	-1.786	0.020	-1.561	0.020	-1.862
0.110	-0.823	0.040	-1.856**	0.060	-2.156**	0.060	-1.484
0.200	-0.480	0.060	-1.080	0.090	-1.189	0.110	-1.242
0.230	-0.452	0.090	-0.943	0.110	-1.119	0.140	-1.079
0.400	-0.328	0.130	-0.876	0.130	-1.038	0.190	-3.996**
0.490	-0.341	0.150	-0.854	0.150	-1.051	0.250	-0.874
0.590	-0.336	0.200	-0.775	0.210	-0.947	0.400	-0.716
0.630	-0.323	0.250	1.855**	0.250	-0.877	0.490	-0.531
0.700	-0.306	0.260	-0.712	0.340	0.471**	0.580	-0.450
0.750	-0.259	0.280	1.839**	0.370	-1.632**	0.650	-0.465
0.810	-0.225	0.290	-0.106**	0.400	-0.612	0.700	-0.441
0.840	-0.253	0.310	1.317**	0.410	-0.180**	0.750	-0.399
0.900	-0.212	0.320	1.025**	0.430	-1.554**	0.800	-0.315
0.960	-0.128	0.340	1.202**	0.440	-1.128**	0.830	-0.303
		0.350	-0.918**	0.460	-0.679**	0.900	-0.260
		0.370	1.235**	0.490	-0.617	0.960	-0.230
		0.380	-0.908**	0.500	1.011**		
		0.400	-0.491	0.520	-1.745**		
		0.410	1.222**	0.540	0.596**		
		0.430	0.805**	0.550	0.764**		
		0.440	-0.471	0.580	-0.435		
		0.460	0.794**	0.600	0.744**		
		0.470	0.639**	0.610	0.627**		
		0.490	-0.409	0.650	3.959**		
		0.500	0.826**	0.700	-0.414		
		0.520	0.411**	0.750	-0.395		
		0.530	-0.431	0.820	-0.308		
		0.550	0.137**	0.890	-0.194		
		0.560	0.702**	0.900	-0.210		
		0.580	-0.352	0.960	-0.154		
		0.590	1.082**				
		0.600	1.023**				
		0.640	-0.285				
		0.700	-0.259				
		0.750	-0.029**				
		0.820	-0.202				
		0.870	-0.043				
		0.930	-0.153				
		0.960	-0.145				
			Lower Surface				
0.020	0.535	0.020	0.674	0.020	0.778	0.020	0.791
0.110	0.193	0.060	0.497	0.060	0.559	0.060	3.809**
0.230	0.125	0.090	0.374	0.090	2.411**	0.110	0.455
0.400	0.020	0.120	-0.446**	0.120	0.394	0.250	0.197
0.490	0.028	0.200	0.239	0.200	0.311	0.400	0.117
0.630	1.931**	0.260	0.190	0.250	0.187	0.490	0.043
0.750	-0.005	0.400	0.080	0.400	0.045	0.580	-0.037
0.850	0.001	0.490	0.025	0.490	-0.019	0.650	0.003
0.900	0.064	0.580	-0.026	0.580	-0.006	0.750	0.142
0.960	0.023	0.640	0.072	0.650	-0.048	0.830	0.243
		0.750	0.139	0.750	0.006	0.900	0.256
		0.870	0.175	0.890	0.197	0.960	0.141
		0.930	0.067	0.930	0.125		
		0.960	0.022	0.960	-1.746**		
CN =	0.463		0.638		0.708		0.824

Table J-2. Continued.

Flight 228, Wing sweep = 26°, Time = 12-45-37-500, MINF = 0.594, Camber = 0/2, ALPT = 12.03, BETA = -0.44, QINF = 296.6, RNPU = 3.1E+06, CNWP = 0.2431

η = 0.93		0.76		0.59		0.40	
			Upper Surface				
x/c	CP	*x/c*	CP	*x/c*	CP	*x/c*	CP
0.020	-1.728	0.000	-0.496	0.000	5.004**	0.010	-2.321
0.060	-1.245	0.020	-2.222	0.020	-1.930	0.020	-2.275
0.110	-0.823	0.040	-1.875**	0.060	-2.193**	0.060	-1.768
0.200	-0.449	0.060	-1.247	0.090	-1.201	0.110	-1.289
0.230	-0.284	0.090	-1.002	0.110	-1.154	0.140	-1.033
0.400	-0.316	0.130	-0.940	0.130	-1.040	0.190	-4.052**
0.490	-0.322	0.150	-0.861	0.150	-1.017	0.250	-0.670
0.590	-0.323	0.200	-0.763	0.210	-0.877	0.400	-0.541
0.630	-0.314	0.250	1.833**	0.250	-0.762	0.490	-0.414
0.700	-0.283	0.260	-0.617	0.340	0.446**	0.580	-0.385
0.750	-0.250	0.280	1.834**	0.370	-1.553**	0.650	-0.361
0.810	-0.224	0.290	-0.122**	0.400	-0.580	0.700	-0.345
0.840	-0.248	0.310	1.300**	0.410	-0.197**	0.750	-0.344
0.900	-0.207	0.320	1.026**	0.430	-1.493**	0.800	-0.304
0.960	-0.080	0.340	1.186**	0.440	-1.067**	0.830	-0.238
		0.350	-0.942**	0.460	-0.614**	0.900	-0.232
		0.370	1.214**	0.490	-0.478	0.960	-0.198
		0.380	-0.909**	0.500	1.002**		
		0.400	-0.445	0.520	-1.678**		
		0.410	1.214**	0.540	0.581**		
		0.430	0.789**	0.550	0.759**		
		0.440	-0.383	0.580	-0.277		
		0.460	0.778**	0.600	0.753**		
		0.470	0.641**	0.610	0.634**		
		0.490	-0.376	0.650	3.985**		
		0.500	0.809**	0.700	-0.314		
		0.520	0.384**	0.750	-0.294		
		0.530	-0.346	0.820	-0.215		
		0.550	0.114**	0.890	-0.116		
		0.560	0.676**	0.900	-0.133		
		0.580	-0.324	0.960	-0.078		
		0.590	1.083**				
		0.600	1.008**				
		0.640	-0.286				
		0.700	-0.232				
		0.750	-0.037**				
		0.820	-0.208				
		0.870	-0.043				
		0.930	-0.147				
		0.960	-0.147				
			Lower Surface				
0.020	0.461	0.020	0.635	0.020	0.722	0.020	0.786
0.110	0.146	0.060	0.449	0.060	0.556	0.060	3.832**
0.230	0.107	0.090	0.321	0.090	2.421**	0.110	0.439
0.400	0.009	0.120	-0.466**	0.120	0.337	0.250	0.138
0.490	0.025	0.200	0.193	0.200	0.252	0.400	0.084
0.630	1.921**	0.260	0.144	0.250	0.145	0.490	0.020
0.750	-0.005	0.400	0.058	0.400	0.010	0.580	-0.073
0.850	0.004	0.490	0.002	0.490	-0.013	0.650	-0.013
0.900	0.061	0.580	-0.041	0.580	-0.021	0.750	0.133
0.960	0.038	0.640	0.069	0.650	-0.027	0.830	0.254
		0.750	0.148	0.750	-0.012	0.900	0.270
		0.870	0.180	0.890	0.199	0.960	0.140
		0.930	0.103	0.930	0.134		
		0.960	0.055	0.960	-1.779**		
CN =	0.418		0.618		0.608		0.742

Table J-2. Continued.

Flight 228, Wing sweep = 26°, Time = 12-45-59-000, MINF = 0.602, Camber = 0/2, ALPT = 13.00, BETA = 0.60, QINF = 299.3, RNPU = 3.1E+06, CNWP = 0.2755

η = 0.93		0.76		0.59		0.40	
			Upper Surface				
x/c	CP	*x/c*	CP	*x/c*	CP	*x/c*	CP
0.020	-1.796	0.000	-0.556	0.000	5.037**	0.010	-1.919
0.060	-1.361	0.020	-1.798	0.020	-1.565	0.020	-1.749
0.110	-0.938	0.040	-1.782**	0.060	-2.097**	0.060	-1.433
0.200	-0.491	0.060	-1.122	0.090	-1.179	0.110	-1.293
0.230	-0.444	0.090	-0.993	0.110	-1.139	0.140	-1.108
0.400	-0.349	0.130	-0.920	0.130	-1.014	0.190	-3.939**
0.490	-0.322	0.150	-0.857	0.150	-1.037	0.250	-0.906
0.590	-0.315	0.200	-0.820	0.210	-0.921	0.400	-0.713
0.630	-0.315	0.250	1.872**	0.250	-0.859	0.490	-0.480
0.700	-0.290	0.260	-0.695	0.340	0.507**	0.580	-0.471
0.750	-0.250	0.280	1.866**	0.370	-1.613**	0.650	-0.435
0.810	-0.239	0.290	-0.142**	0.400	-0.652	0.700	-0.420
0.840	-0.263	0.310	1.350**	0.410	-0.118**	0.750	-0.380
0.900	-0.205	0.320	1.071**	0.430	-1.536**	0.800	-0.325
0.960	-0.117	0.340	1.235**	0.440	-1.108**	0.830	-0.295
		0.350	-0.857**	0.460	-0.657**	0.900	-0.270
		0.370	1.263**	0.490	-0.575	0.960	-0.224
		0.380	-0.915**	0.500	1.039**		
		0.400	-0.568	0.520	-1.706**		
		0.410	1.263**	0.540	0.628**		
		0.430	0.830**	0.550	0.819**		
		0.440	-0.488	0.580	-0.358		
		0.460	0.821**	0.600	0.791**		
		0.470	0.677**	0.610	0.666**		
		0.490	-0.436	0.650	4.026**		
		0.500	0.867**	0.700	-0.351		
		0.520	0.440**	0.750	-0.324		
		0.530	-0.366	0.820	-0.247		
		0.550	0.163**	0.890	-0.176		
		0.560	0.731**	0.900	-0.167		
		0.580	-0.403	0.960	-0.121		
		0.590	1.109**				
		0.600	1.053**				
		0.640	-0.286				
		0.700	-0.251				
		0.750	-0.042**				
		0.820	-0.231				
		0.870	-0.049				
		0.930	-0.207				
		0.960	-0.207				
			Lower Surface				
0.020	0.504	0.020	0.630	0.020	0.761	0.020	0.791
0.110	0.180	0.060	0.484	0.060	0.556	0.060	3.875**
0.230	0.126	0.090	0.353	0.090	2.476**	0.110	0.466
0.400	0.032	0.120	-0.457**	0.120	0.376	0.250	0.181
0.490	0.022	0.200	0.222	0.200	0.291	0.400	0.103
0.630	1.972**	0.260	0.177	0.250	0.185	0.490	0.047
0.750	-0.019	0.400	0.067	0.400	0.035	0.580	-0.047
0.850	-0.009	0.490	0.011	0.490	-0.008	0.650	0.007
0.900	0.055	0.580	-0.036	0.580	-0.016	0.750	0.146
0.960	0.021	0.640	0.058	0.650	-0.043	0.830	0.246
		0.750	0.143	0.750	-0.007	0.900	0.264
		0.870	0.165	0.890	0.191	0.960	0.155
		0.930	0.075	0.930	0.119		
		0.960	0.023	0.960	-1.686**		
CN =	0.462		0.650		0.667		0.821

Table J-2. Continued.

Flight 228, Wing sweep = 26°, Time = 12-46-32-500, MINF = 0.595, Camber = 0/2, ALPT = 13.06, BETA = -0.88, QINF = 296.2, RNPU = 3.1E+06, CNWP = 0.3285

η = 0.93		0.76		0.59		0.40	
			Upper Surface				
x/c	CP	*x/c*	CP	*x/c*	CP	*x/c*	CP
0.020	-1.903	0.000	-0.624	0.000	5.038**	0.010	-2.164
0.060	-1.358	0.020	-1.713	0.020	-1.493	0.020	-1.781
0.110	-0.800	0.040	-1.865**	0.060	-2.169**	0.060	-1.440
0.200	-0.490	0.060	-1.063	0.090	-1.126	0.110	-1.318
0.230	-0.441	0.090	-0.948	0.110	-1.071	0.140	-1.040
0.400	-0.342	0.130	-0.895	0.130	-0.993	0.190	-4.030**
0.490	-0.303	0.150	-0.870	0.150	-1.023	0.250	-0.943
0.590	-0.311	0.200	-0.806	0.210	-0.922	0.400	-0.663
0.630	-0.306	0.250	1.835**	0.250	-0.904	0.490	-0.487
0.700	-0.289	0.260	-0.674	0.340	0.444**	0.580	-0.426
0.750	-0.245	0.280	1.817**	0.370	-1.636**	0.650	-0.432
0.810	-0.227	0.290	-0.168**	0.400	-0.718	0.700	-0.417
0.840	-0.213	0.310	1.301**	0.410	-0.170**	0.750	-0.413
0.900	-0.197	0.320	1.017**	0.430	-1.558**	0.800	-0.335
0.960	-0.103	0.340	1.172**	0.440	-1.122**	0.830	-0.309
		0.350	-0.916**	0.460	-0.661**	0.900	-0.253
		0.370	1.213**	0.490	-0.642	0.960	-0.194
		0.380	-0.921**	0.500	0.987**		
		0.400	-0.533	0.520	-1.748**		
		0.410	1.207**	0.540	0.573**		
		0.430	0.776**	0.550	0.744**		
		0.440	-0.535	0.580	-0.439		
		0.460	0.753**	0.600	0.740**		
		0.470	0.626**	0.610	0.619**		
		0.490	-0.425	0.650	4.017**		
		0.500	0.850**	0.700	-0.369		
		0.520	0.374**	0.750	-0.349		
		0.530	-0.445	0.820	-0.259		
		0.550	0.108**	0.890	-0.179		
		0.560	0.677**	0.900	-0.188		
		0.580	-0.406	0.960	-0.129		
		0.590	1.042**				
		0.600	0.982**				
		0.640	-0.261				
		0.700	-0.242				
		0.750	-0.050**				
		0.820	-0.241				
		0.870	-0.035				
		0.930	-0.194				
		0.960	-0.183				
			Lower Surface				
0.020	0.506	0.020	0.680	0.020	0.753	0.020	0.772
0.110	0.178	0.060	0.485	0.060	0.556	0.060	3.865**
0.230	0.127	0.090	0.364	0.090	2.451**	0.110	0.484
0.400	0.025	0.120	-0.454**	0.120	0.379	0.250	0.183
0.490	0.030	0.200	0.232	0.200	0.292	0.400	0.105
0.630	1.914**	0.260	0.186	0.250	0.194	0.490	0.049
0.750	-0.035	0.400	0.064	0.400	0.043	0.580	-0.040
0.850	-0.020	0.490	0.026	0.490	-0.008	0.650	0.008
0.900	0.040	0.580	-0.040	0.580	-0.008	0.750	0.155
0.960	0.010	0.640	0.066	0.650	-0.036	0.830	0.237
		0.750	0.144	0.750	0.000	0.900	0.263
		0.870	0.165	0.890	0.190	0.960	0.152
		0.930	0.072	0.930	0.128		
		0.960	0.024	0.960	-1.754**		
CN =	0.440		0.642		0.701		0.818

Table J-2. Continued.

Flight 228, Wing sweep = 26°, Time = 12-48-50-000, MINF = 0.605, Camber = 3/5, ALPT = 6.70, BETA = 0.77, QINF = 304.5, RNPU = 3.1E+06, CNWP = 0.3074

η = 0.93		0.76		0.59		0.40	
			Upper Surface				
x/c	CP	*x/c*	CP	*x/c*	CP	*x/c*	CP
0.020	-0.333	0.000	0.744	0.000	4.912**	0.010	-1.675
0.060	-0.371	0.020	-0.699	0.020	-0.913	0.020	-0.955
0.110	-0.508	0.040	-1.331**	0.060	-2.098**	0.060	-0.909
0.200	-0.329	0.060	-0.640	0.090	-0.702	0.110	-0.802
0.230	-0.340	0.090	-0.576	0.110	-0.726	0.140	-0.716
0.400	-0.254	0.130	-0.636	0.130	-0.712	0.190	-3.909**
0.490	-0.250	0.150	-0.654	0.150	-0.658	0.250	-0.505
0.590	-0.320	0.200	-0.550	0.210	-0.589	0.400	-0.455
0.630	-0.334	0.250	1.708**	0.250	-0.496	0.490	-0.356
0.700	-0.373	0.260	-0.457	0.340	0.355**	0.580	-0.324
0.750	-0.444	0.280	1.697**	0.370	-1.410**	0.650	-0.422
0.810	-0.392	0.290	0.011**	0.400	-0.432	0.700	-0.398
0.840	-0.408	0.310	1.181**	0.410	-0.154**	0.750	-0.469
0.900	-0.266	0.320	0.909**	0.430	-1.341**	0.800	-0.417
0.960	-0.089	0.340	1.078**	0.440	-0.932**	0.830	-0.428
		0.350	-0.880**	0.460	-0.488**	0.900	-0.199
		0.370	1.102**	0.490	-0.441	0.960	-0.024
		0.380	-0.907**	0.500	0.890**		
		0.400	-0.348	0.520	-1.539**		
		0.410	1.107**	0.540	0.475**		
		0.430	0.673**	0.550	0.626**		
		0.440	-0.363	0.580	-0.347		
		0.460	0.660**	0.600	0.623**		
		0.470	0.517**	0.610	0.507**		
		0.490	-0.369	0.650	3.919**		
		0.500	0.701**	0.700	-0.506		
		0.520	0.277**	0.750	-0.505		
		0.530	-0.376	0.820	-0.478		
		0.550	0.022**	0.890	-0.200		
		0.560	0.570**	0.900	-0.159		
		0.580	-0.371	0.960	-0.017		
		0.590	0.938**				
		0.600	0.909**				
		0.640	-0.471				
		0.700	-0.451				
		0.750	-0.037**				
		0.820	-0.482				
		0.870	-0.047				
		0.930	-0.166				
		0.960	-0.090				
			Lower Surface				
0.020	-0.097	0.020	0.094	0.020	0.239	0.020	0.520
0.110	-0.037	0.060	0.129	0.060	0.226	0.060	3.771**
0.230	0.024	0.090	0.076	0.090	2.396**	0.110	0.164
0.400	0.000	0.120	-0.715**	0.120	0.054	0.250	-0.024
0.490	0.027	0.200	0.004	0.200	0.043	0.400	-0.037
0.630	1.829**	0.260	0.033	0.250	0.006	0.490	-0.051
0.750	0.066	0.400	0.004	0.400	-0.048	0.580	-0.081
0.850	0.098	0.490	-0.011	0.490	-0.024	0.650	0.034
0.900	0.176	0.580	-0.008	0.580	-0.010	0.750	0.214
0.960	0.120	0.640	0.144	0.650	-0.045	0.830	0.342
		0.750	0.235	0.750	-0.002	0.900	0.383
		0.870	0.303	0.890	0.324	0.960	0.291
		0.930	0.218	0.930	0.260		
		0.960	0.161	0.960	-1.694**		
CN =	0.351		0.504		0.477		0.544

Table J-2. Continued.

Flight 228, Wing sweep = 26°, Time = 12-48-55-000, MINF = 0.627, Camber = 4/7, ALPT = 8.30, BETA = -0.76, QINF = 326.1, RNPU = 3.2E+06, CNWP = 0.3554

η = 0.93		0.76		0.59		0.40	
			Upper Surface				
x/c	CP	*x/c*	CP	*x/c*	CP	*x/c*	CP
0.020	-0.597	0.000	0.605	0.000	4.602**	0.010	-1.900
0.060	-0.533	0.020	-1.077	0.020	-1.212	0.020	-1.840
0.110	-0.572	0.040	-1.552**	0.060	-1.943**	0.060	-1.185
0.200	-0.428	0.060	-0.925	0.090	-0.981	0.110	-1.026
0.230	-0.408	0.090	-0.826	0.110	-1.004	0.140	-0.885
0.400	-0.311	0.130	-0.907	0.130	-0.973	0.190	-3.634**
0.490	-0.329	0.150	-0.887	0.150	-0.848	0.250	-0.584
0.590	-0.379	0.200	-0.724	0.210	-0.717	0.400	-0.499
0.630	-0.400	0.250	1.606**	0.250	-0.601	0.490	-0.381
0.700	-0.454	0.260	-0.554	0.340	0.347**	0.580	-0.389
0.750	-0.564	0.280	1.602**	0.370	-1.331**	0.650	-0.431
0.810	-0.502	0.290	0.023**	0.400	-0.476	0.700	-0.409
0.840	-0.523	0.310	1.111**	0.410	-0.128**	0.750	-0.475
0.900	-0.337	0.320	0.857**	0.430	-1.279**	0.800	-0.393
0.960	-0.139	0.340	1.016**	0.440	-0.879**	0.830	-0.379
		0.350	-0.806**	0.460	-0.465**	0.900	-0.169
		0.370	1.041**	0.490	-0.480	0.960	-0.068
		0.380	-0.831**	0.500	0.843**		
		0.400	-0.437	0.520	-1.439**		
		0.410	1.041**	0.540	0.460**		
		0.430	0.636**	0.550	0.603**		
		0.440	-0.411	0.580	-0.407		
		0.460	0.623**	0.600	0.599**		
		0.470	0.506**	0.610	0.477**		
		0.490	-0.424	0.650	3.675**		
		0.500	0.623**	0.700	-0.565		
		0.520	0.281**	0.750	-0.562		
		0.530	-0.430	0.820	-0.513		
		0.550	0.025**	0.890	-0.169		
		0.560	0.545**	0.900	-0.129		
		0.580	-0.422	0.960	-0.007		
		0.590	0.884**				
		0.600	0.824**				
		0.640	-0.545				
		0.700	-0.520				
		0.750	-0.018**				
		0.820	-0.549				
		0.870	-0.025				
		0.930	-0.177				
		0.960	-0.106				
			Lower Surface				
0.020	0.058	0.020	0.277	0.020	0.367	0.020	0.573
0.110	0.028	0.060	0.240	0.060	0.313	0.060	3.537**
0.230	0.111	0.090	0.170	0.090	2.253**	0.110	0.201
0.400	0.032	0.120	-0.545**	0.120	0.143	0.250	0.049
0.490	0.054	0.200	0.106	0.200	0.131	0.400	0.021
0.630	1.716**	0.260	0.109	0.250	0.089	0.490	0.002
0.750	0.084	0.400	0.050	0.400	0.011	0.580	-0.037
0.850	0.110	0.490	0.040	0.490	0.000	0.650	0.081
0.900	0.188	0.580	0.039	0.580	0.033	0.750	0.255
0.960	0.110	0.640	0.191	0.650	-0.026	0.830	0.372
		0.750	0.271	0.750	0.027	0.900	0.414
		0.870	0.337	0.890	0.358	0.960	0.290
		0.930	0.239	0.930	0.285		
		0.960	0.176	0.960	-1.566**		
CN =	0.463		0.660		0.601		0.669

Table J-2. Continued.

Flight 228, Wing sweep = 26°, Time = 12-48-57-500, MINF = 0.638, Camber = 6/9, ALPT = 10.11, BETA = -0.12, QINF = 336.8, RNPU = 3.3E+06, CNWP = 0.4391

η = 0.93		0.76		0.59		0.40	
			Upper Surface				
x/c	CP	*x/c*	CP	*x/c*	CP	*x/c*	CP
0.020	-0.781	0.000	0.510	0.000	4.470**	0.010	-1.802
0.060	-0.771	0.020	-1.612	0.020	-1.809	0.020	-1.799
0.110	-0.814	0.040	-1.589**	0.060	-1.869**	0.060	-1.743
0.200	-0.568	0.060	-1.327	0.090	-1.599	0.110	-1.253
0.230	-0.538	0.090	-1.399	0.110	-1.540	0.140	-1.105
0.400	-0.384	0.130	-1.142	0.130	-1.609	0.190	-3.507**
0.490	-0.382	0.150	-1.426	0.150	-1.076	0.250	-0.615
0.590	-0.439	0.200	-0.936	0.210	-0.797	0.400	-0.526
0.630	-0.496	0.250	1.576**	0.250	-0.680	0.490	-0.398
0.700	-0.579	0.260	-0.668	0.340	0.360**	0.580	-0.413
0.750	-0.750	0.280	1.566**	0.370	-1.335**	0.650	-0.433
0.810	-0.703	0.290	0.014**	0.400	-0.542	0.700	-0.413
0.840	-0.745	0.310	1.097**	0.410	-0.111**	0.750	-0.474
0.900	-0.406	0.320	0.848**	0.430	-1.281**	0.800	-0.373
0.960	-0.185	0.340	1.004**	0.440	-0.905**	0.830	-0.337
		0.350	-0.768**	0.460	-0.503**	0.900	-0.210
		0.370	1.027**	0.490	-0.527	0.960	-0.158
		0.380	-0.775**	0.500	0.838**		
		0.400	-0.483	0.520	-1.446**		
		0.410	1.029**	0.540	0.459**		
		0.430	0.638**	0.550	0.600**		
		0.440	-0.475	0.580	-0.419		
		0.460	0.631**	0.600	0.584**		
		0.470	0.505**	0.610	0.488**		
		0.490	-0.479	0.650	3.572**		
		0.500	0.666**	0.700	-0.590		
		0.520	0.275**	0.750	-0.601		
		0.530	-0.486	0.820	-0.507		
		0.550	0.078**	0.890	-0.111		
		0.560	0.549**	0.900	-0.101		
		0.580	-0.483	0.960	-0.037		
		0.590	0.878**				
		0.600	0.823**				
		0.640	-0.621				
		0.700	-0.596				
		0.750	0.001**				
		0.820	-0.557				
		0.870	-0.006				
		0.930	-0.203				
		0.960	-0.146				
			Lower Surface				
0.020	0.193	0.020	0.412	0.020	0.490	0.020	0.666
0.110	0.121	0.060	0.350	0.060	0.411	0.060	3.437**
0.230	0.159	0.090	0.267	0.090	2.194**	0.110	0.340
0.400	0.069	0.120	-0.413**	0.120	0.252	0.250	0.149
0.490	0.090	0.200	0.160	0.200	0.189	0.400	0.097
0.630	1.683**	0.260	0.205	0.250	0.189	0.490	0.060
0.750	0.122	0.400	0.126	0.400	0.084	0.580	0.038
0.850	0.137	0.490	0.107	0.490	0.031	0.650	0.163
0.900	0.215	0.580	0.107	0.580	0.109	0.750	0.319
0.960	0.112	0.640	0.253	0.650	0.000	0.830	0.425
		0.750	0.337	0.750	0.067	0.900	0.466
		0.870	0.373	0.890	0.404	0.960	0.303
		0.930	0.267	0.930	0.321		
		0.960	0.189	0.960	-1.504**		
CN =	0.624		0.853		0.762		0.807

Table J-2. Continued.

Flight 228, Wing sweep = 26°, Time = 12-49-1-000, MINF = 0.635, Camber = 8/12, ALPT = 11.43, BETA = -0.41, QINF = 330.8, RNPU = 3.2E+06, CNWP = 0.5211

η = 0.93		0.76		0.59		0.40	
			Upper Surface				
x/c	CP	*x/c*	CP	*x/c*	CP	*x/c*	CP
0.020	-0.872	0.000	0.381	0.000	4.580**	0.010	-1.856
0.060	-1.024	0.020	-1.728	0.020	-1.891	0.020	-1.910
0.110	-1.021	0.040	-1.589**	0.060	-1.874**	0.060	-1.872
0.200	-0.699	0.060	-1.432	0.090	-1.782	0.110	-1.579
0.230	-0.648	0.090	-1.643	0.110	-1.733	0.140	-1.334
0.400	-0.476	0.130	-1.433	0.130	-1.911	0.190	-3.541**
0.490	-0.512	0.150	-1.779	0.150	-1.459	0.250	-0.725
0.590	-0.559	0.200	-1.445	0.210	-1.283	0.400	-0.563
0.630	-0.607	0.250	1.621**	0.250	-0.924	0.490	-0.423
0.700	-0.729	0.260	-0.707	0.340	0.376**	0.580	-0.442
0.750	-0.927	0.280	1.619**	0.370	-1.435**	0.650	-0.443
0.810	-0.888	0.290	-0.040**	0.400	-0.562	0.700	-0.423
0.840	-0.968	0.310	1.139**	0.410	-0.084**	0.750	-0.486
0.900	-0.390	0.320	0.884**	0.430	-1.369**	0.800	-0.433
0.960	-0.345	0.340	1.039**	0.440	-0.989**	0.830	-0.343
		0.350	-0.752**	0.460	-0.586**	0.900	-0.336
		0.370	1.065**	0.490	-0.541	0.960	-0.313
		0.380	-0.785**	0.500	0.878**		
		0.400	-0.525	0.520	-1.547**		
		0.410	1.070**	0.540	0.497**		
		0.430	0.672**	0.550	0.638**		
		0.440	-0.533	0.580	-0.521		
		0.460	0.659**	0.600	0.624**		
		0.470	0.548**	0.610	0.520**		
		0.490	-0.539	0.650	3.666**		
		0.500	0.699**	0.700	-0.621		
		0.520	0.311**	0.750	-0.646		
		0.530	-0.529	0.820	-0.500		
		0.550	0.080**	0.890	-0.184		
		0.560	0.581**	0.900	-0.183		
		0.580	-0.542	0.960	-0.117		
		0.590	0.919**				
		0.600	0.890**				
		0.640	-0.684				
		0.700	-0.673				
		0.750	0.014**				
		0.820	-0.571				
		0.870	0.001				
		0.930	-0.210				
		0.960	-0.202				
			Lower Surface				
0.020	0.269	0.020	0.475	0.020	0.558	0.020	0.694
0.110	0.188	0.060	0.424	0.060	0.483	0.060	3.529**
0.230	0.168	0.090	0.336	0.090	2.263**	0.110	0.418
0.400	0.114	0.120	-0.378**	0.120	0.335	0.250	0.219
0.490	0.142	0.200	0.170	0.200	0.191	0.400	0.181
0.630	1.740**	0.260	0.281	0.250	0.269	0.490	0.145
0.750	0.162	0.400	0.186	0.400	0.160	0.580	0.109
0.850	0.163	0.490	0.170	0.490	0.061	0.650	0.250
0.900	0.223	0.580	0.177	0.580	0.186	0.750	0.393
0.960	0.074	0.640	0.322	0.650	0.007	0.830	0.491
		0.750	0.360	0.750	0.081	0.900	0.534
		0.870	0.438	0.890	0.467	0.960	0.335
		0.930	0.298	0.930	0.370		
		0.960	0.202	0.960	-1.502**		
CN =	0.788		0.998		0.919		0.960

Table J-2. Continued.

Flight 228, Wing sweep = 26°, Time = 12-49-10-500, MINF = 0.611, Camber = 9/14, ALPT = 12.02, BETA = 0.48, QINF = 301.9, RNPU = 3.0E+06, CNWP = 0.5898

η = 0.93		0.76		0.59		0.40	
			Upper Surface				
x/c	CP	*x/c*	CP	*x/c*	CP	*x/c*	CP
0.020	-0.966	0.000	0.356	0.000	5.073**	0.010	-1.995
0.060	-1.119	0.020	-1.839	0.020	-2.028	0.020	-2.008
0.110	-1.107	0.040	-1.686**	0.060	-1.998**	0.060	-1.811
0.200	-0.766	0.060	-1.558	0.090	-1.965	0.110	-1.538
0.230	-0.717	0.090	-1.802	0.110	-1.930	0.140	-1.270
0.400	-0.525	0.130	-1.516	0.130	-1.918	0.190	-3.825**
0.490	-0.501	0.150	-1.965	0.150	-1.529	0.250	-0.712
0.590	-0.604	0.200	-1.509	0.210	-1.357	0.400	-0.577
0.630	-0.668	0.250	1.825**	0.250	-1.036	0.490	-0.433
0.700	-0.809	0.260	-0.783	0.340	0.448**	0.580	-0.431
0.750	-1.004	0.280	1.837**	0.370	-1.613**	0.650	-0.443
0.810	-0.961	0.290	-0.119**	0.400	-0.582	0.700	-0.441
0.840	-1.078	0.310	1.294**	0.410	-0.037**	0.750	-0.506
0.900	-0.453	0.320	1.029**	0.430	-1.547**	0.800	-0.449
0.960	-0.451	0.340	1.183**	0.440	-1.118**	0.830	-0.364
		0.350	-0.769**	0.460	-0.683**	0.900	-0.347
		0.370	1.212**	0.490	-0.558	0.960	-0.323
		0.380	-0.858**	0.500	0.996**		
		0.400	-0.596	0.520	-1.731**		
		0.410	1.219**	0.540	0.582**		
		0.430	0.780**	0.550	0.734**		
		0.440	-0.582	0.580	-0.472		
		0.460	0.767**	0.600	0.744**		
		0.470	0.645**	0.610	0.614**		
		0.490	-0.581	0.650	4.072**		
		0.500	0.816**	0.700	-0.614		
		0.520	0.406**	0.750	-0.692		
		0.530	-0.589	0.820	-0.532		
		0.550	0.126**	0.890	-0.248		
		0.560	0.677**	0.900	-0.245		
		0.580	-0.582	0.960	-0.176		
		0.590	1.063**				
		0.600	0.997**				
		0.640	-0.739				
		0.700	-0.736				
		0.750	0.031**				
		0.820	-0.588				
		0.870	0.009				
		0.930	-0.232				
		0.960	-0.231				
			Lower Surface				
0.020	0.337	0.020	0.525	0.020	0.608	0.020	0.715
0.110	0.230	0.060	0.492	0.060	0.541	0.060	3.922**
0.230	0.170	0.090	0.389	0.090	2.535**	0.110	0.476
0.400	0.149	0.120	-0.359**	0.120	0.392	0.250	0.278
0.490	0.182	0.200	0.169	0.200	0.180	0.400	0.211
0.630	1.963**	0.260	0.327	0.250	0.328	0.490	0.186
0.750	0.198	0.400	0.253	0.400	0.188	0.580	0.157
0.850	0.210	0.490	0.233	0.490	0.080	0.650	0.323
0.900	0.261	0.580	0.248	0.580	0.245	0.750	0.462
0.960	0.070	0.640	0.369	0.650	0.009	0.830	0.550
		0.750	0.423	0.750	0.101	0.900	0.603
		0.870	0.478	0.890	0.510	0.960	0.383
		0.930	0.349	0.930	0.411		
		0.960	0.226	0.960	-1.591**		
CN =	0.880		1.108		0.998		1.010

Table J-2. Continued.

Flight 228, Wing sweep = 26°, Time = 12-49-12-500, MINF = 0.606, Camber = 10/17, ALPT = 13.08, BETA = -0.91, QINF = 296.9, RNPU = 3.0E+06, CNWP = 0.7796

η = 0.93		0.76		0.59		0.40	
			Upper Surface				
x/c	CP	*x/c*	CP	*x/c*	CP	*x/c*	CP
0.020	-1.007	0.000	0.218	0.000	5.158**	0.010	-2.029
0.060	-1.258	0.020	-1.909	0.020	-2.069	0.020	-2.026
0.110	-1.176	0.040	-1.715**	0.060	-2.033**	0.060	-1.920
0.200	-0.948	0.060	-1.662	0.090	-2.093	0.110	-1.544
0.230	-0.800	0.090	-1.929	0.110	-1.899	0.140	-1.328
0.400	-0.587	0.130	-1.542	0.130	-1.356	0.190	-3.890**
0.490	-0.569	0.150	-1.648	0.150	-1.383	0.250	-0.640
0.590	-0.657	0.200	-1.573	0.210	-1.264	0.400	-0.539
0.630	-0.722	0.250	1.854**	0.250	-1.200	0.490	-0.427
0.700	-0.871	0.260	-1.111	0.340	0.470**	0.580	-0.442
0.750	-0.863	0.280	1.853**	0.370	-1.752**	0.650	-0.435
0.810	-0.891	0.290	-0.180**	0.400	-0.838	0.700	-0.433
0.840	-0.982	0.310	1.318**	0.410	-0.039**	0.750	-0.501
0.900	-0.555	0.320	1.045**	0.430	-1.680**	0.800	-0.471
0.960	-0.553	0.340	1.209**	0.440	-1.272**	0.830	-0.450
		0.350	-0.783**	0.460	-0.818**	0.900	-0.423
		0.370	1.239**	0.490	-0.667	0.960	-0.384
		0.380	-0.873**	0.500	1.017**		
		0.400	-0.555	0.520	-1.880**		
		0.410	1.238**	0.540	0.591**		
		0.430	0.792**	0.550	0.758**		
		0.440	-0.619	0.580	-0.548		
		0.460	0.779**	0.600	0.753**		
		0.470	0.654**	0.610	0.637**		
		0.490	-0.599	0.650	4.139**		
		0.500	0.826**	0.700	-0.673		
		0.520	0.398**	0.750	-0.678		
		0.530	-0.603	0.820	-0.577		
		0.550	0.122**	0.890	-0.354		
		0.560	0.688**	0.900	-0.378		
		0.580	-0.600	0.960	-0.311		
		0.590	1.074**				
		0.600	0.998**				
		0.640	-0.696				
		0.700	-0.683				
		0.750	0.013**				
		0.820	-0.472				
		0.870	-0.002				
		0.930	-0.282				
		0.960	-0.258				
			Lower Surface				
0.020	0.370	0.020	0.554	0.020	0.650	0.020	0.720
0.110	0.276	0.060	0.526	0.060	0.575	0.060	3.987**
0.230	0.142	0.090	0.421	0.090	2.577**	0.110	0.524
0.400	0.177	0.120	-0.285**	0.120	0.431	0.250	0.317
0.490	0.200	0.200	0.142	0.200	0.169	0.400	0.258
0.630	1.985**	0.260	0.382	0.250	0.371	0.490	0.249
0.750	0.232	0.400	0.281	0.400	0.230	0.580	0.220
0.850	0.221	0.490	0.271	0.490	0.091	0.650	0.385
0.900	0.282	0.580	0.284	0.580	0.300	0.750	0.512
0.960	0.079	0.640	0.413	0.650	0.001	0.830	0.604
		0.750	0.456	0.750	0.088	0.900	0.653
		0.870	0.522	0.890	0.547	0.960	0.442
		0.930	0.369	0.930	0.447		
		0.960	0.255	0.960	-1.619**		
CN =	0.951		1.161		1.103		1.066

Table J-2. Continued.

Flight 228, Wing sweep = 26°, Time = 12-49-20-500, MINF = 0.581, Camber = 9/13, ALPT = 11.28, BETA = -0.59, QINF = 272.0, RNPU = 2.9E+06, CNWP = 0.5458

η = 0.93		0.76		0.59		0.40	
			Upper Surface				
x/c	CP	*x/c*	CP	*x/c*	CP	*x/c*	CP
0.020	-0.807	0.000	0.454	0.000	5.640**	0.010	-1.876
0.060	-0.934	0.020	-1.317	0.020	-1.571	0.020	-1.276
0.110	-1.036	0.040	-1.863**	0.060	-2.209**	0.060	-1.952
0.200	-0.720	0.060	-1.513	0.090	-1.924	0.110	-1.476
0.230	-0.615	0.090	-1.485	0.110	-1.877	0.140	-1.151
0.400	-0.465	0.130	-1.742	0.130	-1.865	0.190	-4.237**
0.490	-0.471	0.150	-2.024	0.150	-1.238	0.250	-0.705
0.590	-0.601	0.200	-1.161	0.210	-0.982	0.400	-0.564
0.630	-0.625	0.250	2.046**	0.250	-0.792	0.490	-0.457
0.700	-0.764	0.260	-0.780	0.340	0.523**	0.580	-0.489
0.750	-0.975	0.280	2.026**	0.370	-1.755**	0.650	-0.515
0.810	-0.932	0.290	-0.217**	0.400	-0.595	0.700	-0.513
0.840	-1.018	0.310	1.450**	0.410	-0.033**	0.750	-0.597
0.900	-0.391	0.320	1.149**	0.430	-1.675**	0.800	-0.567
0.960	-0.360	0.340	1.329**	0.440	-1.213**	0.830	-0.382
		0.350	-0.845**	0.460	-0.717**	0.900	-0.299
		0.370	1.366**	0.490	-0.593	0.960	-0.274
		0.380	-0.949**	0.500	1.119**		
		0.400	-0.563	0.520	-1.873**		
		0.410	1.367**	0.540	0.662**		
		0.430	0.884**	0.550	0.834**		
		0.440	-0.561	0.580	-0.489		
		0.460	0.857**	0.600	0.829**		
		0.470	0.721**	0.610	0.704**		
		0.490	-0.556	0.650	4.528**		
		0.500	0.913**	0.700	-0.676		
		0.520	0.445**	0.750	-0.714		
		0.530	-0.564	0.820	-0.549		
		0.550	0.137**	0.890	-0.189		
		0.560	0.772**	0.900	-0.209		
		0.580	-0.559	0.960	-0.141		
		0.590	1.176**				
		0.600	1.110**				
		0.640	-0.712				
		0.700	-0.703				
		0.750	0.015**				
		0.820	-0.563				
		0.870	-0.001				
		0.930	-0.208				
		0.960	-0.207				
			Lower Surface				
0.020	0.249	0.020	0.440	0.020	0.566	0.020	0.674
0.110	0.211	0.060	0.444	0.060	0.512	0.060	4.362**
0.230	0.136	0.090	0.351	0.090	2.822**	0.110	0.476
0.400	0.170	0.120	-0.465**	0.120	0.351	0.250	0.246
0.490	0.122	0.200	0.133	0.200	0.163	0.400	0.195
0.630	2.177**	0.260	0.308	0.250	0.301	0.490	0.174
0.750	0.179	0.400	0.213	0.400	0.169	0.580	0.145
0.850	0.189	0.490	0.198	0.490	0.073	0.650	0.286
0.900	0.253	0.580	0.202	0.580	0.225	0.750	0.426
0.960	0.084	0.640	0.349	0.650	0.010	0.830	0.522
		0.750	0.392	0.750	0.089	0.900	0.567
		0.870	0.462	0.890	0.487	0.960	0.372
		0.930	0.316	0.930	0.392		
		0.960	0.212	0.960	-1.758**		
CN =	0.795		1.025		0.932		0.980

Table J-2. Continued.

Flight 228, Wing sweep = 26°, Time = 12-49-41-500, MINF = 0.595, Camber = 8/12, ALPT = 11.16, BETA = -0.30, QINF = 286.1, RNPU = 2.9E+06, CNWP = 0.5101

η = 0.93		0.76		0.59		0.40	
			Upper Surface				
x/c	CP	*x/c*	CP	*x/c*	CP	*x/c*	CP
0.020	-0.895	0.000	0.413	0.000	5.351**	0.010	-1.925
0.060	-0.948	0.020	-1.422	0.020	-1.905	0.020	-1.977
0.110	-1.068	0.040	-1.902**	0.060	-2.111**	0.060	-1.943
0.200	-0.707	0.060	-1.579	0.090	-1.916	0.110	-1.476
0.230	-0.672	0.090	-1.693	0.110	-1.905	0.140	-1.152
0.400	-0.492	0.130	-1.653	0.130	-2.044	0.190	-4.038**
0.490	-0.473	0.150	-1.858	0.150	-1.408	0.250	-0.754
0.590	-0.569	0.200	-1.170	0.210	-0.978	0.400	-0.583
0.630	-0.629	0.250	1.923**	0.250	-0.778	0.490	-0.470
0.700	-0.757	0.260	-0.787	0.340	0.478**	0.580	-0.487
0.750	-0.970	0.280	1.906**	0.370	-1.655**	0.650	-0.500
0.810	-0.934	0.290	-0.222**	0.400	-0.592	0.700	-0.509
0.840	-1.009	0.310	1.354**	0.410	-0.042**	0.750	-0.574
0.900	-0.385	0.320	1.063**	0.430	-1.603**	0.800	-0.535
0.960	-0.345	0.340	1.246**	0.440	-1.138**	0.830	-0.379
		0.350	-0.814**	0.460	-0.671**	0.900	-0.314
		0.370	1.284**	0.490	-0.582	0.960	-0.297
		0.380	-0.913**	0.500	1.044**		
		0.400	-0.554	0.520	-1.776**		
		0.410	1.268**	0.540	0.612**		
		0.430	0.820**	0.550	0.770**		
		0.440	-0.557	0.580	-0.494		
		0.460	0.785**	0.600	0.765**		
		0.470	0.670**	0.610	0.644**		
		0.490	-0.568	0.650	4.294**		
		0.500	0.850**	0.700	-0.677		
		0.520	0.403**	0.750	-0.697		
		0.530	-0.569	0.820	-0.532		
		0.550	0.101**	0.890	-0.186		
		0.560	0.712**	0.900	-0.203		
		0.580	-0.555	0.960	-0.133		
		0.590	1.094**				
		0.600	1.024**				
		0.640	-0.718				
		0.700	-0.710				
		0.750	0.004**				
		0.820	-0.566				
		0.870	0.000				
		0.930	-0.216				
		0.960	-0.211				
			Lower Surface				
0.020	0.259	0.020	0.452	0.020	0.560	0.020	0.677
0.110	0.187	0.060	0.427	0.060	0.483	0.060	4.136**
0.230	0.135	0.090	0.335	0.090	2.672**	0.110	0.421
0.400	0.127	0.120	-0.449**	0.120	0.332	0.250	0.223
0.490	0.152	0.200	0.139	0.200	0.158	0.400	0.175
0.630	2.039**	0.260	0.290	0.250	0.276	0.490	0.155
0.750	0.159	0.400	0.192	0.400	0.150	0.580	0.117
0.850	0.180	0.490	0.173	0.490	0.059	0.650	0.262
0.900	0.236	0.580	0.196	0.580	0.196	0.750	0.405
0.960	0.089	0.640	0.340	0.650	-0.001	0.830	0.510
		0.750	0.371	0.750	0.074	0.900	0.556
		0.870	0.424	0.890	0.483	0.960	0.343
		0.930	0.294	0.930	0.384		
		0.960	0.191	0.960	-1.682**		
CN =	0.799		1.014		0.919		0.984

Table J-2. Continued.

Flight 228, Wing sweep = 26°, Time = 12-50-6-500, MINF = 0.604, Camber = 8/13, ALPT = 11.15, BETA = -0.44, QINF = 292.2, RNPU = 3.0E+06, CNWP = 0.5446

η = 0.93		0.76		0.59		0.40	
			Upper Surface				
x/c	CP	*x/c*	CP	*x/c*	CP	*x/c*	CP
0.020	-0.907	0.000	0.426	0.000	5.272**	0.010	-1.888
0.060	-0.968	0.020	-1.447	0.020	-1.921	0.020	-1.907
0.110	-1.063	0.040	-1.829**	0.060	-2.034**	0.060	-1.820
0.200	-0.715	0.060	-1.528	0.090	-1.933	0.110	-1.568
0.230	-0.659	0.090	-1.702	0.110	-1.874	0.140	-1.164
0.400	-0.479	0.130	-1.639	0.130	-2.025	0.190	-3.921**
0.490	-0.468	0.150	-1.926	0.150	-1.516	0.250	-0.735
0.590	-0.571	0.200	-1.195	0.210	-1.092	0.400	-0.581
0.630	-0.626	0.250	1.884**	0.250	-0.744	0.490	-0.480
0.700	-0.757	0.260	-0.767	0.340	0.479**	0.580	-0.469
0.750	-0.959	0.280	1.884**	0.370	-1.617**	0.650	-0.503
0.810	-0.940	0.290	-0.163**	0.400	-0.607	0.700	-0.502
0.840	-1.015	0.310	1.347**	0.410	-0.008**	0.750	-0.559
0.900	-0.397	0.320	1.068**	0.430	-1.551**	0.800	-0.527
0.960	-0.356	0.340	1.237**	0.440	-1.121**	0.830	-0.390
		0.350	-0.764**	0.460	-0.659**	0.900	-0.308
		0.370	1.272**	0.490	-0.575	0.960	-0.272
		0.380	-0.880**	0.500	1.049**		
		0.400	-0.539	0.520	-1.735**		
		0.410	1.270**	0.540	0.602**		
		0.430	0.812**	0.550	0.778**		
		0.440	-0.552	0.580	-0.484		
		0.460	0.799**	0.600	0.767**		
		0.470	0.692**	0.610	0.649**		
		0.490	-0.551	0.650	4.237**		
		0.500	0.852**	0.700	-0.663		
		0.520	0.454**	0.750	-0.698		
		0.530	-0.575	0.820	-0.516		
		0.550	0.126**	0.890	-0.185		
		0.560	0.707**	0.900	-0.192		
		0.580	-0.574	0.960	-0.130		
		0.590	1.089**				
		0.600	1.026**				
		0.640	-0.712				
		0.700	-0.699				
		0.750	0.022**				
		0.820	-0.567				
		0.870	0.007				
		0.930	-0.224				
		0.960	-0.226				
			Lower Surface				
0.020	0.271	0.020	0.478	0.020	0.566	0.020	0.694
0.110	0.204	0.060	0.440	0.060	0.505	0.060	4.082**
0.230	0.150	0.090	0.349	0.090	2.649**	0.110	0.451
0.400	0.128	0.120	-0.414**	0.120	0.343	0.250	0.237
0.490	0.159	0.200	0.154	0.200	0.152	0.400	0.175
0.630	2.030**	0.260	0.301	0.250	0.288	0.490	0.170
0.750	0.178	0.400	0.209	0.400	0.165	0.580	0.132
0.850	0.183	0.490	0.195	0.490	0.076	0.650	0.282
0.900	0.252	0.580	0.203	0.580	0.217	0.750	0.424
0.960	0.078	0.640	0.344	0.650	0.014	0.830	0.520
		0.750	0.389	0.750	0.091	0.900	0.566
		0.870	0.447	0.890	0.491	0.960	0.369
		0.930	0.321	0.930	0.387		
		0.960	0.212	0.960	-1.614**		
CN =	0.808		1.027		0.936		0.991

Table J-2. Continued.

Flight 228, Wing sweep = 26°, Time = 12-50-15-000, MINF = 0.612, Camber = 8/12, ALPT = 11.12, BETA = -0.56, QINF = 301.0, RNPU = 3.0E+06, CNWP = 0.4970

η = 0.93		0.76		0.59		0.40	
			Upper Surface				
x/c	CP	*x/c*	CP	*x/c*	CP	*x/c*	CP
0.020	-0.799	0.000	0.503	0.000	5.112**	0.010	-1.703
0.060	-0.870	0.020	-1.339	0.020	-1.354	0.020	-1.815
0.110	-0.934	0.040	-1.781**	0.060	-1.980**	0.060	-1.689
0.200	-0.662	0.060	-1.427	0.090	-1.736	0.110	-1.488
0.230	-0.590	0.090	-1.520	0.110	-1.755	0.140	-1.118
0.400	-0.433	0.130	-1.514	0.130	-1.860	0.190	-3.812**
0.490	-0.420	0.150	-1.726	0.150	-1.301	0.250	-0.691
0.590	-0.518	0.200	-1.098	0.210	-0.908	0.400	-0.542
0.630	-0.575	0.250	1.832**	0.250	-0.728	0.490	-0.425
0.700	-0.692	0.260	-0.730	0.340	0.459**	0.580	-0.456
0.750	-0.902	0.280	1.824**	0.370	-1.560**	0.650	-0.484
0.810	-0.861	0.290	-0.138**	0.400	-0.573	0.700	-0.482
0.840	-0.932	0.310	1.299**	0.410	-0.013**	0.750	-0.563
0.900	-0.349	0.320	1.026**	0.430	-1.496**	0.800	-0.497
0.960	-0.288	0.340	1.196**	0.440	-1.073**	0.830	-0.366
		0.350	-0.748**	0.460	-0.629**	0.900	-0.264
		0.370	1.222**	0.490	-0.556	0.960	-0.254
		0.380	-0.860**	0.500	1.004**		
		0.400	-0.529	0.520	-1.673**		
		0.410	1.224**	0.540	0.586**		
		0.430	0.789**	0.550	0.743**		
		0.440	-0.526	0.580	-0.475		
		0.460	0.764**	0.600	0.739**		
		0.470	0.641**	0.610	0.624**		
		0.490	-0.524	0.650	4.107**		
		0.500	0.811**	0.700	-0.642		
		0.520	0.389**	0.750	-0.669		
		0.530	-0.532	0.820	-0.511		
		0.550	0.108**	0.890	-0.157		
		0.560	0.687**	0.900	-0.165		
		0.580	-0.530	0.960	-0.108		
		0.590	1.060**				
		0.600	0.995**				
		0.640	-0.684				
		0.700	-0.670				
		0.750	0.012**				
		0.820	-0.548				
		0.870	-0.002				
		0.930	-0.193				
		0.960	-0.196				
			Lower Surface				
0.020	0.227	0.020	0.438	0.020	0.513	0.020	0.662
0.110	0.173	0.060	0.407	0.060	0.458	0.060	3.957**
0.230	0.151	0.090	0.313	0.090	2.566**	0.110	0.402
0.400	0.118	0.120	-0.436**	0.120	0.293	0.250	0.204
0.490	0.134	0.200	0.154	0.200	0.173	0.400	0.156
0.630	1.965**	0.260	0.265	0.250	0.252	0.490	0.137
0.750	0.167	0.400	0.179	0.400	0.135	0.580	0.103
0.850	0.172	0.490	0.162	0.490	0.061	0.650	0.238
0.900	0.244	0.580	0.169	0.580	0.183	0.750	0.387
0.960	0.091	0.640	0.317	0.650	0.011	0.830	0.486
		0.750	0.364	0.750	0.086	0.900	0.526
		0.870	0.428	0.890	0.464	0.960	0.341
		0.930	0.302	0.930	0.367		
		0.960	0.193	0.960	-1.572**		
CN =	0.732		0.954		0.862		0.918

Table J-2. Continued.

Flight 228, Wing sweep = 26°, Time = 12-50-17-000, MINF = 0.622, Camber = 5/7, ALPT = 7.05, BETA = 1.03, QINF = 310.6, RNPU = 3.1E+06, CNWP = 0.3478

η = 0.93		0.76		0.59		0.40	
			Upper Surface				
x/c	CP	*x/c*	CP	*x/c*	CP	*x/c*	CP
0.020	-0.279	0.000	0.799	0.000	4.952**	0.010	-1.617
0.060	-0.429	0.020	-0.624	0.020	-0.816	0.020	-0.891
0.110	-0.529	0.040	-1.332**	0.060	-1.921**	0.060	-1.089
0.200	-0.407	0.060	-0.767	0.090	-0.875	0.110	-1.007
0.230	-0.389	0.090	-0.744	0.110	-0.939	0.140	-0.832
0.400	-0.296	0.130	-0.850	0.130	-0.936	0.190	-3.696**
0.490	-0.309	0.150	-0.866	0.150	-0.799	0.250	-0.551
0.590	-0.348	0.200	-0.694	0.210	-0.687	0.400	-0.489
0.630	-0.384	0.250	1.773**	0.250	-0.567	0.490	-0.388
0.700	-0.439	0.260	-0.535	0.340	0.431**	0.580	-0.393
0.750	-0.549	0.280	1.760**	0.370	-1.380**	0.650	-0.467
0.810	-0.498	0.290	-0.090**	0.400	-0.434	0.700	-0.445
0.840	-0.533	0.310	1.254**	0.410	-0.015**	0.750	-0.533
0.900	-0.318	0.320	0.989**	0.430	-1.334**	0.800	-0.472
0.960	-0.131	0.340	1.147**	0.440	-0.918**	0.830	-0.483
		0.350	-0.727**	0.460	-0.480**	0.900	-0.153
		0.370	1.180**	0.490	-0.458	0.960	-0.046
		0.380	-0.860**	0.500	0.964**		
		0.400	-0.443	0.520	-1.500**		
		0.410	1.178**	0.540	0.570**		
		0.430	0.752**	0.550	0.710**		
		0.440	-0.408	0.580	-0.383		
		0.460	0.743**	0.600	0.711**		
		0.470	0.607**	0.610	0.600**		
		0.490	-0.417	0.650	3.978**		
		0.500	0.786**	0.700	-0.570		
		0.520	0.364**	0.750	-0.577		
		0.530	-0.419	0.820	-0.544		
		0.550	0.100**	0.890	-0.187		
		0.560	0.656**	0.900	-0.146		
		0.580	-0.423	0.960	-0.002		
		0.590	0.995**				
		0.600	0.950**				
		0.640	-0.552				
		0.700	-0.527				
		0.750	-0.021**				
		0.820	-0.567				
		0.870	-0.032				
		0.930	-0.184				
		0.960	-0.106				
			Lower Surface				
0.020	-0.061	0.020	0.059	0.020	0.230	0.020	0.455
0.110	0.014	0.060	0.181	0.060	0.259	0.060	3.833**
0.230	0.082	0.090	0.122	0.090	2.485**	0.110	0.195
0.400	0.028	0.120	-0.599**	0.120	0.086	0.250	0.023
0.490	0.051	0.200	0.082	0.200	0.100	0.400	0.010
0.630	1.891**	0.260	0.095	0.250	0.074	0.490	-0.011
0.750	0.097	0.400	0.043	0.400	0.006	0.580	-0.035
0.850	0.121	0.490	0.029	0.490	0.001	0.650	0.098
0.900	0.208	0.580	0.036	0.580	0.036	0.750	0.272
0.960	0.131	0.640	0.195	0.650	-0.026	0.830	0.393
		0.750	0.279	0.750	0.023	0.900	0.441
		0.870	0.367	0.890	0.385	0.960	0.316
		0.930	0.249	0.930	0.294		
		0.960	0.183	0.960	-1.525**		
CN =	0.439		0.628		0.570		0.641

Table J-2. Continued.

Flight 223, Wing sweep = 26°, Time = 10-23-15-500, MINF = 0.695, Camber = 2/4, ALPT = 5.30, BETA = 0.40, QINF = 294.8, RNPU = 2.7E+06, CNWP = 0.2553

η = 0.93		0.76		0.59		0.40	
			Upper Surface				
x/c	CP	*x/c*	CP	*x/c*	CP	*x/c*	CP
0.020	-0.170	0.000	0.837	0.000	4.873**	0.010	-1.275
0.060	-0.175	0.020	-0.522	0.020	-0.647	0.020	-0.644
0.110	-0.150	0.040	-0.411	0.060	-2.723**	0.060	-0.717
0.200	-0.275	0.060	-0.500	0.090	-0.536	0.110	-0.641
0.230	-0.232	0.090	-0.440	0.110	-0.605	0.140	-0.642
0.400	-0.213	0.130	-0.461	0.130	-0.603	0.190	-2.959**
0.490	-0.214	0.150	-0.506	0.150	-0.555	0.250	-0.448
0.590	-0.280	0.200	-0.418	0.210	-0.530	0.400	-0.375
0.630	-0.271	0.250	-0.397	0.250	-0.384	0.490	-0.332
0.700	-0.301	0.260	-0.358	0.340	-0.418	0.580	-0.314
0.750	-0.367	0.280	-0.381	0.370	-0.407	0.650	-0.438
0.810	-0.326	0.290	-0.372	0.400	-0.391	0.700	-0.412
0.840	-0.320	0.310	-0.362	0.410	-0.743**	0.750	-0.437
0.900	-0.189	0.320	-0.354	0.430	-0.405	0.800	-0.471**
0.960	-0.053	0.340	-0.354	0.440	-0.376	0.830	-0.445
		0.350	-0.216**	0.460	-0.380	0.900	-0.226
		0.370	-0.306	0.490	-0.306	0.960	-0.012
		0.380	-0.352	0.500	-0.397		
		0.400	-0.271	0.520	-0.368		
		0.410	-0.355	0.540	-0.378		
		0.430	-0.317	0.550	-0.325		
		0.440	-0.276	0.580	-0.317		
		0.460	-0.335	0.600	-0.391		
		0.470	-0.334	0.610	-0.392		
		0.490	-0.316	0.650	3.479**		
		0.500	-0.352	0.700	-0.460		
		0.520	-0.317	0.750	-0.500		
		0.530	-0.317	0.820	-0.456**		
		0.550	-0.367	0.890	-0.190		
		0.560	-0.355	0.900	-0.127		
		0.580	-0.327	0.960	0.013		
		0.590	-0.388				
		0.600	-0.367				
		0.640	-0.421				
		0.700	-0.437				
		0.750	-0.020**				
		0.820	-0.398				
		0.870	-0.320				
		0.930	-0.149				
		0.960	-0.068				
			Lower Surface				
0.020	-0.232	0.020	-0.068	0.020	0.076	0.020	0.399
0.110	-0.125	0.060	0.015	0.060	0.075	0.060	3.185**
0.230	-0.071	0.090	-0.025	0.090	1.193**	0.110	0.013
0.400	-0.019	0.120	-0.034	0.120	-0.173	0.250	-0.130
0.490	0.016	0.200	-0.056	0.200	-0.042	0.400	-0.109
0.630	1.966**	0.260	-0.070	0.250	-0.072	0.490	-0.141
0.750	0.060	0.400	-0.058	0.400	-0.092	0.580	-0.161
0.850	0.136	0.490	-0.073	0.490	-0.014	0.650	-0.011
0.900	0.219	0.580	-0.047	0.580	-0.052	0.750	0.180
0.960	0.163	0.640	0.125	0.650	-0.036	0.830	0.351
		0.750	0.240	0.750	-0.011	0.900	0.378
		0.870	0.301	0.890	0.331	0.960	0.283
		0.930	0.247	0.930	0.279		
		0.960	0.181	0.960	-0.832**		
CN =	0.241		0.414		0.378		0.433

Table J-2. Continued.

Flight 223, Wing sweep = 26°, Time = 10-23-23-000, MINF = 0.696, Camber = 2/4, ALPT = 5.09, BETA = 0.43, QINF = 295.9, RNPU = 2.7E+06, CNWP = 0.2613

η = 0.93		0.76		0.59		0.40	
			Upper Surface				
x/c	CP	*x/c*	CP	*x/c*	CP	*x/c*	CP
0.020	-0.146	0.000	0.846	0.000	4.853**	0.010	-1.186
0.060	-0.233	0.020	-0.483	0.020	-0.605	0.020	-0.658
0.110	-0.255	0.040	-0.385	0.060	-2.714**	0.060	-0.715
0.200	-0.260	0.060	-0.484	0.090	-0.514	0.110	-0.620
0.230	-0.213	0.090	-0.422	0.110	-0.586	0.140	-0.605
0.400	-0.213	0.130	-0.462	0.130	-0.590	0.190	-2.949**
0.490	-0.206	0.150	-0.493	0.150	-0.529	0.250	-0.419
0.590	-0.268	0.200	-0.400	0.210	-0.535	0.400	-0.375
0.630	-0.264	0.250	-0.375	0.250	-0.383	0.490	-0.322
0.700	-0.293	0.260	-0.351	0.340	-0.410	0.580	-0.315
0.750	-0.359	0.280	-0.381	0.370	-0.399	0.650	-0.427
0.810	-0.315	0.290	-0.363	0.400	-0.360	0.700	-0.412
0.840	-0.316	0.310	-0.352	0.410	-0.741**	0.750	-0.436
0.900	-0.177	0.320	-0.349	0.430	-0.389	0.800	-0.471**
0.960	-0.047	0.340	-0.347	0.440	-0.355	0.830	-0.435
		0.350	-0.216**	0.460	-0.375	0.900	-0.236
		0.370	-0.306	0.490	-0.306	0.960	-0.021
		0.380	-0.362	0.500	-0.387		
		0.400	-0.271	0.520	-0.368		
		0.410	-0.348	0.540	-0.364		
		0.430	-0.317	0.550	-0.325		
		0.440	-0.289	0.580	-0.299		
		0.460	-0.320	0.600	-0.384		
		0.470	-0.334	0.610	-0.378		
		0.490	-0.316	0.650	3.464**		
		0.500	-0.330	0.700	-0.452		
		0.520	-0.341	0.750	-0.485		
		0.530	-0.313	0.820	-0.462**		
		0.550	-0.367	0.890	-0.186		
		0.560	-0.348	0.900	-0.128		
		0.580	-0.327	0.960	0.008		
		0.590	-0.410				
		0.600	-0.362				
		0.640	-0.414				
		0.700	-0.429				
		0.750	-0.021**				
		0.820	-0.394				
		0.870	-0.316				
		0.930	-0.150				
		0.960	-0.065				
			Lower Surface				
0.020	-0.271	0.020	-0.108	0.020	0.044	0.020	0.374
0.110	-0.139	0.060	0.002	0.060	0.166	0.060	3.171**
0.230	-0.076	0.090	-0.035	0.090	1.187**	0.110	0.033
0.400	-0.024	0.120	-0.043	0.120	-0.183	0.250	-0.138
0.490	-0.008	0.200	-0.068	0.200	-0.030	0.400	-0.121
0.630	1.957**	0.260	-0.078	0.250	-0.080	0.490	-0.149
0.750	0.047	0.400	-0.063	0.400	-0.103	0.580	-0.157
0.850	0.134	0.490	-0.078	0.490	-0.016	0.650	-0.016
0.900	0.217	0.580	-0.052	0.580	-0.071	0.750	0.179
0.960	0.165	0.640	0.127	0.650	-0.037	0.830	0.348
		0.750	0.237	0.750	-0.015	0.900	0.372
		0.870	0.308	0.890	0.328	0.960	0.286
		0.930	0.249	0.930	0.277		
		0.960	0.183	0.960	-0.830**		
CN=	0.234		0.403		0.370		0.424

Table J-2. Continued.

Flight 223, Wing sweep = 26°, Time = 10-23-23-500, MINF = 0.696, Camber = 1/4, ALPT = 4.60, BETA = 0.40, QINF = 296.2, RNPU = 2.7E+06, CNWP = 0.2330

η = 0.93		0.76		0.59		0.40	
			Upper Surface				
x/c	CP	*x/c*	CP	*x/c*	CP	*x/c*	CP
0.020	-0.049	0.000	0.841	0.000	4.849**	0.010	-0.974
0.060	-0.156	0.020	-0.348	0.020	-0.467	0.020	-0.604
0.110	-0.243	0.040	-0.296	0.060	-2.712**	0.060	-0.630
0.200	-0.249	0.060	-0.389	0.090	-0.471	0.110	-0.560
0.230	-0.213	0.090	-0.352	0.110	-0.530	0.140	-0.550
0.400	-0.190	0.130	-0.406	0.130	-0.518	0.190	-2.947**
0.490	-0.203	0.150	-0.439	0.150	-0.501	0.250	-0.391
0.590	-0.311	0.200	-0.360	0.210	-0.487	0.400	-0.368
0.630	-0.256	0.250	-0.364	0.250	-0.339	0.490	-0.312
0.700	-0.282	0.260	-0.316	0.340	-0.380	0.580	-0.251
0.750	-0.351	0.280	-0.345	0.370	-0.375	0.650	-0.431
0.810	-0.300	0.290	-0.332	0.400	-0.353	0.700	-0.391
0.840	-0.304	0.310	-0.329	0.410	-0.741**	0.750	-0.429
0.900	-0.172	0.320	-0.326	0.430	-0.373	0.800	-0.470**
0.960	-0.033	0.340	-0.326	0.440	-0.344	0.830	-0.435
		0.350	-0.205**	0.460	-0.363	0.900	-0.236
		0.370	-0.284	0.490	-0.268	0.960	-0.021
		0.380	-0.338	0.500	-0.368		
		0.400	-0.259	0.520	-0.350		
		0.410	-0.328	0.540	-0.350		
		0.430	-0.299	0.550	-0.300		
		0.440	-0.264	0.580	-0.299		
		0.460	-0.325	0.600	-0.372		
		0.470	-0.327	0.610	-0.364		
		0.490	-0.299	0.650	3.462**		
		0.500	-0.307	0.700	-0.466		
		0.520	-0.317	0.750	-0.480		
		0.530	-0.299	0.820	-0.457**		
		0.550	-0.348	0.890	-0.186		
		0.560	-0.342	0.900	-0.128		
		0.580	-0.313	0.960	0.008		
		0.590	-0.365				
		0.600	-0.322				
		0.640	-0.401				
		0.700	-0.432				
		0.750	-0.018**				
		0.820	-0.386				
		0.870	-0.320				
		0.930	-0.146				
		0.960	-0.065				
			Lower Surface				
0.020	-0.339	0.020	-0.214	0.020	-0.035	0.020	0.303
0.110	-0.165	0.060	-0.040	0.060	0.047	0.060	3.169**
0.230	-0.091	0.090	-0.082	0.090	1.186**	0.110	0.012
0.400	-0.028	0.120	-0.072	0.120	-0.232	0.250	-0.164
0.490	0.007	0.200	-0.094	0.200	-0.098	0.400	-0.136
0.630	1.955**	0.260	-0.100	0.250	-0.102	0.490	-0.164
0.750	0.059	0.400	-0.078	0.400	-0.127	0.580	-0.167
0.850	0.142	0.490	-0.089	0.490	-0.016	0.650	-0.016
0.900	0.223	0.580	-0.075	0.580	-0.082	0.750	0.154
0.960	0.174	0.640	0.116	0.650	-0.037	0.830	0.348
		0.750	0.237	0.750	-0.015	0.900	0.375
		0.870	0.308	0.890	0.328	0.960	0.286
		0.930	0.252	0.930	0.277		
		0.960	0.186	0.960	-0.829**		
CN =	0.223		0.365		0.330		0.388

Table J-2. Continued.

Flight 223, Wing sweep = 26°, Time = 10-23-26-000, MINF = 0.699, Camber = 1/3, ALPT = 3.14, BETA = 0.45, QINF = 299.2, RNPU = 2.7E+06, CNWP = 0.1724

η = 0.93		0.76		0.59		0.40	
			Upper Surface				
x/c	CP	*x/c*	CP	*x/c*	CP	*x/c*	CP
0.020	0.139	0.000	0.733	0.000	4.795**	0.010	-0.529
0.060	0.000	0.020	-0.061	0.020	-0.100	0.020	-0.321
0.110	-0.108	0.040	-0.064	0.060	-2.689**	0.060	-0.409
0.200	-0.139	0.060	-0.173	0.090	-0.242	0.110	-0.338
0.230	-0.068	0.090	-0.169	0.110	-0.311	0.140	-0.354
0.400	-0.133	0.130	-0.201	0.130	-0.310	0.190	-2.922**
0.490	-0.147	0.150	-0.268	0.150	-0.309	0.250	-0.281
0.590	-0.208	0.200	-0.202	0.210	-0.344	0.400	-0.270
0.630	-0.193	0.250	-0.238	0.250	-0.238	0.490	-0.258
0.700	-0.219	0.260	-0.208	0.340	-0.305	0.580	-0.243
0.750	-0.251	0.280	-0.234	0.370	-0.297	0.650	-0.336
0.810	-0.238	0.290	-0.225	0.400	-0.347	0.700	-0.334
0.840	-0.209	0.310	-0.240	0.410	-0.738**	0.750	-0.338
0.900	-0.102	0.320	-0.230	0.430	-0.299	0.800	-0.401**
0.960	-0.017	0.340	-0.229	0.440	-0.278	0.830	-0.335
		0.350	-0.203**	0.460	-0.276	0.900	-0.235
		0.370	-0.209	0.490	-0.202	0.960	-0.018
		0.380	-0.248	0.500	-0.304		
		0.400	-0.163	0.520	-0.276		
		0.410	-0.257	0.540	-0.298		
		0.430	-0.229	0.550	-0.228		
		0.440	-0.207	0.580	-0.228		
		0.460	-0.229	0.600	-0.289		
		0.470	-0.225	0.610	-0.292		
		0.490	-0.226	0.650	3.422**		
		0.500	-0.167	0.700	-0.353		
		0.520	-0.241	0.750	-0.392		
		0.530	-0.222	0.820	-0.340**		
		0.550	-0.259	0.890	-0.164		
		0.560	-0.277	0.900	-0.100		
		0.580	-0.235	0.960	0.010		
		0.590	-0.295				
		0.600	-0.265				
		0.640	-0.317				
		0.700	-0.308				
		0.750	-0.037**				
		0.820	-0.263				
		0.870	-0.245				
		0.930	-0.106				
		0.960	-0.033				
			Lower Surface				
0.020	-0.567	0.020	-0.512	0.020	-0.305	0.020	0.046
0.110	-0.277	0.060	-0.217	0.060	-0.143	0.060	3.132**
0.230	-0.186	0.090	-0.236	0.090	1.169**	0.110	-0.135
0.400	-0.074	0.120	-0.193	0.120	-0.357	0.250	-0.281
0.490	-0.050	0.200	-0.149	0.200	-0.225	0.400	-0.209
0.630	1.930**	0.260	-0.213	0.250	-0.209	0.490	-0.242
0.750	0.045	0.400	-0.143	0.400	-0.186	0.580	-0.225
0.850	0.135	0.490	-0.161	0.490	-0.032	0.650	-0.080
0.900	0.221	0.580	-0.129	0.580	-0.141	0.750	0.124
0.960	0.183	0.640	0.042	0.650	-0.057	0.830	0.305
		0.750	0.192	0.750	-0.035	0.900	0.315
		0.870	0.272	0.890	0.283	0.960	0.258
		0.930	0.222	0.930	0.247		
		0.960	0.168	0.960	-0.826**		
CN =	0.092		0.183		0.180		0.216

Table J-2. Continued.

Flight 223, Wing sweep = 26°, Time = 10-23-30-500, MINF = 0.713, Camber = 0/3, ALPT = 3.72, BETA = 0.54, QINF = 315.6, RNPU = 2.8E+06, CNWP = 0.1549

η = 0.93		0.76		0.59		0.40	
			Upper Surface				
x/c	CP	*x/c*	CP	*x/c*	CP	*x/c*	CP
0.020	0.060	0.000	0.806	0.000	4.508**	0.010	-0.819
0.060	-0.010	0.020	-0.197	0.020	-0.287	0.020	-0.453
0.110	-0.243	0.040	-0.175	0.060	-2.587**	0.060	-0.447
0.200	-0.177	0.060	-0.277	0.090	-0.313	0.110	-0.423
0.230	-0.162	0.090	-0.230	0.110	-0.391	0.140	-0.447
0.400	-0.157	0.130	-0.265	0.130	-0.388	0.190	-2.808**
0.490	-0.159	0.150	-0.315	0.150	-0.399	0.250	-0.329
0.590	-0.229	0.200	-0.255	0.210	-0.393	0.400	-0.306
0.630	-0.211	0.250	-0.272	0.250	-0.277	0.490	-0.272
0.700	-0.222	0.260	-0.253	0.340	-0.328	0.580	-0.260
0.750	-0.263	0.280	-0.269	0.370	-0.329	0.650	-0.367
0.810	-0.235	0.290	-0.273	0.400	-0.275	0.700	-0.342
0.840	-0.229	0.310	-0.269	0.410	-0.738**	0.750	-0.358
0.900	-0.131	0.320	-0.266	0.430	-0.322	0.800	-0.390**
0.960	-0.008	0.340	-0.269	0.440	-0.294	0.830	-0.345
		0.350	-0.217**	0.460	-0.303	0.900	-0.227
		0.370	-0.232	0.490	-0.230	0.960	-0.019
		0.380	-0.284	0.500	-0.315		
		0.400	-0.196	0.520	-0.295		
		0.410	-0.273	0.540	-0.319		
		0.430	-0.235	0.550	-0.261		
		0.440	-0.203	0.580	-0.245		
		0.460	-0.261	0.600	-0.318		
		0.470	-0.266	0.610	-0.318		
		0.490	-0.254	0.650	3.206**		
		0.500	-0.257	0.700	-0.375		
		0.520	-0.253	0.750	-0.399		
		0.530	-0.261	0.820	-0.360**		
		0.550	-0.290	0.890	-0.159		
		0.560	-0.294	0.900	-0.110		
		0.580	-0.277	0.960	0.017		
		0.590	-0.315				
		0.600	-0.298				
		0.640	-0.331				
		0.700	-0.333				
		0.750	-0.031**				
		0.820	-0.273				
		0.870	-0.266				
		0.930	-0.110				
		0.960	-0.037				
			Lower Surface				
0.020	-0.539	0.020	-0.372	0.020	-0.180	0.020	0.167
0.110	-0.239	0.060	-0.159	0.060	-0.046	0.060	2.931**
0.230	-0.176	0.090	-0.180	0.090	1.071**	0.110	-0.042
0.400	-0.069	0.120	-0.165	0.120	-0.308	0.250	-0.244
0.490	-0.043	0.200	-0.109	0.200	-0.177	0.400	-0.194
0.630	1.793**	0.260	-0.198	0.250	-0.194	0.490	-0.225
0.750	0.052	0.400	-0.134	0.400	-0.186	0.580	-0.242
0.850	0.122	0.490	-0.145	0.490	-0.036	0.650	-0.086
0.900	0.202	0.580	-0.118	0.580	-0.147	0.750	0.126
0.960	0.176	0.640	0.062	0.650	-0.091	0.830	0.304
		0.750	0.184	0.750	-0.026	0.900	0.331
		0.870	0.283	0.890	0.293	0.960	0.251
		0.930	0.222	0.930	0.231		
		0.960	0.170	0.960	-0.820**		
CN =	0.129		0.232		0.215		0.271

Table J-2. Continued.

Flight 223, Wing sweep = 26°, Time = 10-23-33-000, MINF = 0.724, Camber = 1/4, ALPT = 6.08, BETA = 0.51, QINF = 328.8, RNPU = 2.9E+06, CNWP = 0.2425

η = 0.93		0.76		0.59		0.40	
			Upper Surface				
x/c	CP	*x/c*	CP	*x/c*	CP	*x/c*	CP
0.020	-0.363	0.000	0.830	0.000	4.296**	0.010	-1.212
0.060	-0.322	0.020	-0.859	0.020	-0.813	0.020	-1.287
0.110	-0.348	0.040	-0.580	0.060	-2.515**	0.060	-1.142
0.200	-0.308	0.060	-0.654	0.090	-0.607	0.110	-0.617
0.230	-0.268	0.090	-0.545	0.110	-0.701	0.140	-0.748
0.400	-0.232	0.130	-0.569	0.130	-0.712	0.190	-2.726**
0.490	-0.225	0.150	-0.580	0.150	-0.619	0.250	-0.472
0.590	-0.314	0.200	-0.482	0.210	-0.617	0.400	-0.406
0.630	-0.275	0.250	-0.448	0.250	-0.444	0.490	-0.342
0.700	-0.298	0.260	-0.396	0.340	-0.444	0.580	-0.333
0.750	-0.365	0.280	-0.415	0.370	-0.437	0.650	-0.455
0.810	-0.335	0.290	-0.412	0.400	-0.404	0.700	-0.420
0.840	-0.321	0.310	-0.391	0.410	-0.739**	0.750	-0.445
0.900	-0.184	0.320	-0.383	0.430	-0.418	0.800	-0.432**
0.960	-0.061	0.340	-0.379	0.440	-0.387	0.830	-0.425
		0.350	-0.197**	0.460	-0.398	0.900	-0.196
		0.370	-0.338	0.490	-0.316	0.960	0.003
		0.380	-0.393	0.500	-0.392		
		0.400	-0.296	0.520	-0.385		
		0.410	-0.373	0.540	-0.382		
		0.430	-0.341	0.550	-0.341		
		0.440	-0.303	0.580	-0.357		
		0.460	-0.361	0.600	-0.406		
		0.470	-0.358	0.610	-0.408		
		0.490	-0.331	0.650	3.046**		
		0.500	-0.334	0.700	-0.479		
		0.520	-0.342	0.750	-0.489		
		0.530	-0.330	0.820	-0.467**		
		0.550	-0.372	0.890	-0.171		
		0.560	-0.381	0.900	-0.126		
		0.580	-0.355	0.960	0.031		
		0.590	-0.403				
		0.600	-0.386				
		0.640	-0.432				
		0.700	-0.435				
		0.750	-0.005**				
		0.820	-0.392				
		0.870	-0.310				
		0.930	-0.134				
		0.960	-0.054				
			Lower Surface				
0.020	-0.130	0.020	0.105	0.020	0.175	0.020	0.466
0.110	-0.106	0.060	0.092	0.060	0.187	0.060	2.782**
0.230	-0.064	0.090	0.029	0.090	0.996**	0.110	0.083
0.400	-0.007	0.120	0.022	0.120	-0.110	0.250	-0.086
0.490	0.014	0.200	-0.020	0.200	-0.004	0.400	-0.088
0.630	1.689**	0.260	-0.043	0.250	-0.038	0.490	-0.140
0.750	0.061	0.400	-0.038	0.400	-0.076	0.580	-0.138
0.850	0.132	0.490	-0.055	0.490	-0.020	0.650	0.000
0.900	0.216	0.580	-0.039	0.580	-0.060	0.750	0.194
0.960	0.168	0.640	0.119	0.650	-0.053	0.830	0.363
		0.750	0.248	0.750	-0.020	0.900	0.389
		0.870	0.319	0.890	0.329	0.960	0.284
		0.930	0.261	0.930	0.278		
		0.960	0.202	0.960	-0.819**		
CN =	0.280		0.472		0.415		0.510

Table J-2. Continued.

Flight 223, Wing sweep = 26°, Time = 10-23-34-000, MINF = 0.726, Camber = 2/5, ALPT = 7.32, BETA = 0.37, QINF = 332.3, RNPU = 2.9E+06, CNWP = 0.3374

η = 0.93		0.76		0.59		0.40	
			Upper Surface				
x/c	CP	*x/c*	CP	*x/c*	CP	*x/c*	CP
0.020	-0.640	0.000	0.763	0.000	4.238**	0.010	-1.299
0.060	-0.482	0.020	-1.229	0.020	-1.257	0.020	-1.391
0.110	-0.497	0.040	-0.947	0.060	-2.500**	0.060	-1.327
0.200	-0.416	0.060	-0.898	0.090	-1.141	0.110	-1.247
0.230	-0.368	0.090	-0.720	0.110	-1.188	0.140	-1.096
0.400	-0.270	0.130	-0.802	0.130	-1.176	0.190	-2.710**
0.490	-0.252	0.150	-0.881	0.150	-0.669	0.250	-0.503
0.590	-0.332	0.200	-0.635	0.210	-0.643	0.400	-0.432
0.630	-0.345	0.250	-0.532	0.250	-0.523	0.490	-0.380
0.700	-0.376	0.260	-0.496	0.340	-0.507	0.580	-0.343
0.750	-0.474	0.280	-0.504	0.370	-0.503	0.650	-0.468
0.810	-0.401	0.290	-0.488	0.400	-0.452	0.700	-0.457
0.840	-0.438	0.310	-0.462	0.410	-0.744**	0.750	-0.485
0.900	-0.254	0.320	-0.457	0.430	-0.487	0.800	-0.455**
0.960	-0.110	0.340	-0.447	0.440	-0.444	0.830	-0.445
		0.350	-0.219**	0.460	-0.460	0.900	-0.161
		0.370	-0.409	0.490	-0.400	0.960	-0.033
		0.380	-0.454	0.500	-0.455		
		0.400	-0.378	0.520	-0.412		
		0.410	-0.428	0.540	-0.438		
		0.430	-0.385	0.550	-0.392		
		0.440	-0.353	0.580	-0.339		
		0.460	-0.394	0.600	-0.440		
		0.470	-0.422	0.610	-0.449		
		0.490	-0.385	0.650	3.001**		
		0.500	-0.403	0.700	-0.506		
		0.520	-0.394	0.750	-0.553		
		0.530	-0.379	0.820	-0.518**		
		0.550	-0.441	0.890	-0.179		
		0.560	-0.423	0.900	-0.120		
		0.580	-0.390	0.960	0.020		
		0.590	-0.453				
		0.600	-0.430				
		0.640	-0.505				
		0.700	-0.516				
		0.750	-0.004**				
		0.820	-0.475				
		0.870	-0.349				
		0.930	-0.152				
		0.960	-0.076				
			Lower Surface				
0.020	0.007	0.020	0.276	0.020	0.314	0.020	0.571
0.110	-0.031	0.060	0.200	0.060	0.264	0.060	2.740**
0.230	0.015	0.090	0.127	0.090	0.973**	0.110	0.178
0.400	0.034	0.120	0.082	0.120	0.006	0.250	-0.024
0.490	0.041	0.200	0.017	0.200	0.080	0.400	-0.030
0.630	1.659**	0.260	0.027	0.250	0.036	0.490	-0.084
0.750	0.074	0.400	0.000	0.400	-0.029	0.580	-0.095
0.850	0.155	0.490	-0.023	0.490	-0.012	0.650	0.035
0.900	0.214	0.580	-0.004	0.580	-0.019	0.750	0.228
0.960	0.165	0.640	0.186	0.650	-0.031	0.830	0.392
		0.750	0.278	0.750	0.008	0.900	0.407
		0.870	0.341	0.890	0.376	0.960	0.295
		0.930	0.272	0.930	0.302		
		0.960	0.211	0.960	-0.823**		
CN =	0.389		0.615		0.555		0.633

Table J-2. Continued.

Flight 223, Wing sweep = 26°, Time = 10-23-36-000, MINF = 0.725, Camber = 4/7, ALPT = 9.06, BETA = 0.40, QINF = 333.5, RNPU = 2.9E+06, CNWP = 0.4253

η = 0.93		0.76		0.59		0.40	
			Upper Surface				
x/c	CP	*x/c*	CP	*x/c*	CP	*x/c*	CP
0.020	-1.130	0.000	0.660	0.000	4.206**	0.010	-1.497
0.060	-0.694	0.020	-1.406	0.020	-1.367	0.020	-1.551
0.110	-0.649	0.040	-1.070	0.060	-2.508**	0.060	-1.474
0.200	-0.528	0.060	-1.165	0.090	-1.367	0.110	-1.563
0.230	-0.460	0.090	-1.145	0.110	-1.431	0.140	-1.694
0.400	-0.361	0.130	-1.293	0.130	-1.478	0.190	-2.717**
0.490	-0.337	0.150	-1.387	0.150	-1.483	0.250	-0.941
0.590	-0.422	0.200	-1.371	0.210	-1.506	0.400	-0.458
0.630	-0.431	0.250	-0.815	0.250	-0.902	0.490	-0.402
0.700	-0.510	0.260	-0.666	0.340	-0.509	0.580	-0.371
0.750	-0.680	0.280	-0.580	0.370	-0.465	0.650	-0.480
0.810	-0.622	0.290	-0.474	0.400	-0.435	0.700	-0.461
0.840	-0.653	0.310	-0.432	0.410	-0.758**	0.750	-0.473
0.900	-0.359	0.320	-0.421	0.430	-0.476	0.800	-0.455**
0.960	-0.176	0.340	-0.416	0.440	-0.469	0.830	-0.415
		0.350	-0.167**	0.460	-0.472	0.900	-0.181
		0.370	-0.389	0.490	-0.410	0.960	-0.069
		0.380	-0.463	0.500	-0.476		
		0.400	-0.393	0.520	-0.464		
		0.410	-0.456	0.540	-0.475		
		0.430	-0.429	0.550	-0.431		
		0.440	-0.395	0.580	-0.347		
		0.460	-0.445	0.600	-0.504		
		0.470	-0.438	0.610	-0.497		
		0.490	-0.432	0.650	2.974**		
		0.500	-0.454	0.700	-0.554		
		0.520	-0.447	0.750	-0.618		
		0.530	-0.435	0.820	-0.558**		
		0.550	-0.477	0.890	-0.146		
		0.560	-0.482	0.900	-0.103		
		0.580	-0.456	0.960	-0.018		
		0.590	-0.503				
		0.600	-0.502				
		0.640	-0.593				
		0.700	-0.619				
		0.750	0.003**				
		0.820	-0.485				
		0.870	-0.351				
		0.930	-0.258				
		0.960	-0.211				
			Lower Surface				
0.020	0.134	0.020	0.439	0.020	0.419	0.020	0.616
0.110	0.064	0.060	0.313	0.060	0.382	0.060	2.714**
0.230	0.140	0.090	0.228	0.090	0.953**	0.110	0.273
0.400	0.066	0.120	0.197	0.120	0.090	0.250	0.070
0.490	0.074	0.200	0.151	0.200	0.127	0.400	0.042
0.630	1.636**	0.260	0.121	0.250	0.134	0.490	0.003
0.750	0.104	0.400	0.080	0.400	0.051	0.580	-0.014
0.850	0.160	0.490	0.051	0.490	0.004	0.650	0.118
0.900	0.232	0.580	0.067	0.580	0.063	0.750	0.297
0.960	0.135	0.640	0.242	0.650	-0.011	0.830	0.424
		0.750	0.311	0.750	0.037	0.900	0.461
		0.870	0.384	0.890	0.413	0.960	0.317
		0.930	0.291	0.930	0.344		
		0.960	0.203	0.960	-0.836**		
CN =	0.555		0.829		0.748		0.837

Table J-2. Continued.

Flight 223, Wing sweep = 26°, Time = 10-23-39-500, MINF = 0.700, Camber = 6/9, ALPT = 11.08, BETA = 0.60, QINF = 308.1, RNPU = 2.8E+06, CNWP = 0.4649

η = 0.93		0.76		0.59		0.40	
			Upper Surface				
x/c	CP	*x/c*	CP	*x/c*	CP	*x/c*	CP
0.020	-1.341	0.000	0.509	0.000	4.573**	0.010	-1.639
0.060	-0.785	0.020	-1.593	0.020	-1.597	0.020	-1.718
0.110	-1.096	0.040	-1.301	0.060	-2.693**	0.060	-1.717
0.200	-0.981	0.060	-1.375	0.090	-1.580	0.110	-1.785
0.230	-0.531	0.090	-1.411	0.110	-1.698	0.140	-1.535
0.400	-0.446	0.130	-1.518	0.130	-1.406	0.190	-2.919**
0.490	-0.358	0.150	-1.676	0.150	-1.134	0.250	-1.142
0.590	-0.487	0.200	-1.700	0.210	-1.112	0.400	-0.420
0.630	-0.513	0.250	-1.046	0.250	-0.980	0.490	-0.391
0.700	-0.597	0.260	-0.957	0.340	-0.896	0.580	-0.345
0.750	-0.805	0.280	-0.933	0.370	-0.841	0.650	-0.400
0.810	-0.756	0.290	-0.818	0.400	-0.780	0.700	-0.397
0.840	-0.786	0.310	-0.717	0.410	-0.799**	0.750	-0.378
0.900	-0.386	0.320	-0.680	0.430	-0.757	0.800	-0.417**
0.960	-0.231	0.340	-0.595	0.440	-0.713	0.830	-0.326
		0.350	-0.226**	0.460	-0.705	0.900	-0.306
		0.370	-0.467	0.490	-0.599	0.960	-0.282
		0.380	-0.524	0.500	-0.650		
		0.400	-0.362	0.520	-0.645		
		0.410	-0.494	0.540	-0.611		
		0.430	-0.460	0.550	-0.553		
		0.440	-0.421	0.580	-0.490		
		0.460	-0.472	0.600	-0.546		
		0.470	-0.466	0.610	-0.517		
		0.490	-0.458	0.650	3.240**		
		0.500	-0.459	0.700	-0.475		
		0.520	-0.462	0.750	-0.507		
		0.530	-0.446	0.820	-0.387**		
		0.550	-0.495	0.890	-0.231		
		0.560	-0.494	0.900	-0.234		
		0.580	-0.472	0.960	-0.159		
		0.590	-0.528				
		0.600	-0.499				
		0.640	-0.541				
		0.700	-0.588				
		0.750	0.010**				
		0.820	-0.456				
		0.870	-0.327				
		0.930	-0.172				
		0.960	-0.154				
			Lower Surface				
0.020	0.246	0.020	0.527	0.020	0.543	0.020	0.700
0.110	0.149	0.060	0.419	0.060	0.473	0.060	2.958**
0.230	0.180	0.090	0.325	0.090	1.053**	0.110	0.396
0.400	0.108	0.120	0.305	0.120	0.181	0.250	0.170
0.490	0.112	0.200	0.192	0.200	0.168	0.400	0.127
0.630	1.792**	0.260	0.212	0.250	0.234	0.490	0.075
0.750	0.122	0.400	0.141	0.400	0.139	0.580	0.065
0.850	0.176	0.490	0.109	0.490	0.040	0.650	0.170
0.900	0.244	0.580	0.120	0.580	0.124	0.750	0.357
0.960	0.115	0.640	0.287	0.650	0.027	0.830	0.465
		0.750	0.329	0.750	0.058	0.900	0.482
		0.870	0.410	0.890	0.434	0.960	0.293
		0.930	0.308	0.930	0.343		
		0.960	0.195	0.960	-0.884**		
CN =	0.713		0.964		0.860		0.933

Table J-2. Continued.

Flight 223, Wing sweep = 26°, Time = 10-23-41-500, MINF = 0.674, Camber = 7/10, ALPT = 11.66, BETA = 0.57, QINF = 282.0, RNPU = 2.6E+06, CNWP = 0.4807

η = 0.93		0.76		0.59		0.40	
			Upper Surface				
x/c	CP	*x/c*	CP	*x/c*	CP	*x/c*	CP
0.020	-1.549	0.000	0.361	0.000	5.045**	0.010	-1.873
0.060	-0.893	0.020	-1.876	0.020	-1.837	0.020	-1.893
0.110	-1.102	0.040	-1.524	0.060	-2.896**	0.060	-1.891
0.200	-0.777	0.060	-1.550	0.090	-1.764	0.110	-1.945
0.230	-0.753	0.090	-1.584	0.110	-1.889	0.140	-1.503
0.400	-0.466	0.130	-1.673	0.130	-1.237	0.190	-3.143**
0.490	-0.429	0.150	-1.838	0.150	-1.173	0.250	-0.580
0.590	-0.499	0.200	-1.589	0.210	-1.161	0.400	-0.496
0.630	-0.551	0.250	-1.023	0.250	-0.982	0.490	-0.417
0.700	-0.647	0.260	-0.880	0.340	-0.866	0.580	-0.358
0.750	-0.858	0.280	-0.793	0.370	-0.783	0.650	-0.425
0.810	-0.818	0.290	-0.691	0.400	-0.718	0.700	-0.416
0.840	-0.867	0.310	-0.615	0.410	-0.826**	0.750	-0.397
0.900	-0.381	0.320	-0.607	0.430	-0.715	0.800	-0.455**
0.960	-0.275	0.340	-0.564	0.440	-0.663	0.830	-0.348
		0.350	-0.206**	0.460	-0.645	0.900	-0.350
		0.370	-0.494	0.490	-0.541	0.960	-0.315
		0.380	-0.578	0.500	-0.605		
		0.400	-0.480	0.520	-0.594		
		0.410	-0.541	0.540	-0.582		
		0.430	-0.505	0.550	-0.528		
		0.440	-0.462	0.580	-0.476		
		0.460	-0.503	0.600	-0.547		
		0.470	-0.524	0.610	-0.508		
		0.490	-0.507	0.650	3.588**		
		0.500	-0.500	0.700	-0.515		
		0.520	-0.495	0.750	-0.554		
		0.530	-0.480	0.820	-0.433**		
		0.550	-0.489	0.890	-0.241		
		0.560	-0.529	0.900	-0.220		
		0.580	-0.495	0.960	-0.147		
		0.590	-0.559				
		0.600	-0.549				
		0.640	-0.574				
		0.700	-0.627				
		0.750	-0.008**				
		0.820	-0.477				
		0.870	-0.337				
		0.930	-0.183				
		0.960	-0.171				
			Lower Surface				
0.020	0.286	0.020	0.509	0.020	0.554	0.020	0.710
0.110	0.176	0.060	0.458	0.060	0.516	0.060	3.280**
0.230	0.174	0.090	0.352	0.090	1.198**	0.110	0.396
0.400	0.118	0.120	0.327	0.120	0.206	0.250	0.196
0.490	0.123	0.200	0.183	0.200	0.151	0.400	0.162
0.630	2.006**	0.260	0.240	0.250	0.264	0.490	0.095
0.750	0.127	0.400	0.163	0.400	0.142	0.580	0.093
0.850	0.169	0.490	0.125	0.490	0.037	0.650	0.195
0.900	0.243	0.580	0.136	0.580	0.152	0.750	0.370
0.960	0.097	0.640	0.295	0.650	0.077	0.830	0.462
		0.750	0.341	0.750	0.052	0.900	0.480
		0.870	0.404	0.890	0.432	0.960	0.280
		0.930	0.302	0.930	0.352		
		0.960	0.198	0.960	-0.919**		
CN =	0.756		1.013		0.883		0.911

Table J-2. Continued.

Flight 220, Wing sweep = 26°, Time = 9-36-44-000, MINF = 0.803, Camber = 1/4, ALPT = 5.09, BETA = -0.38, QINF = 303.4, RNPU = 2.5E+06

η = 0.93		0.76		0.59		0.40	
			Upper Surface				
x/c	CP	*x/c*	CP	*x/c*	CP	*x/c*	CP
0.020	-0.175	0.000	0.857	0.000	0.907**	0.010	-0.980
0.060	-0.227	0.020	-0.555	0.020	-0.552	0.020	-0.980
0.110	-0.281	0.040	-0.370	0.060	-2.828**	0.060	-0.811
0.200	-0.253	0.060	-0.496	0.090	-0.721	0.110	-0.866
0.230	-0.327	0.090	-0.472	0.110	-0.464	0.140	-0.916
0.400	-0.247	0.130	-0.525	0.130	-0.456	0.190	-2.217**
0.490	-0.218	0.150	-0.486	0.150	-0.533	0.250	-0.446
0.590	-0.320	0.200	-0.461	0.210	-0.567	0.400	-0.368
0.630	-0.297	0.250	-0.402	0.250	-0.405	0.490	-0.361
0.700	-0.284	0.260	-0.359	0.340	-0.387	0.580	-0.368
0.750	-0.383	0.280	-0.381	0.370	-0.383	0.650	-0.416
0.810	-0.380	0.290	-0.364	0.400	-0.390	0.700	-0.401
0.840	-0.343	0.310	-0.375	0.410	-1.091**	0.750	-0.492
0.900	-0.157	0.320	-0.367	0.430	-0.374	0.800	-0.503
0.960	-0.048	0.340	-0.341	0.440	-0.346	0.830	-0.434
		0.350	-0.257**	0.460	-0.369	0.900	-0.177
		0.370	-0.308	0.490	-0.308	0.960	-0.014
		0.380	-0.358	0.500	-0.368		
		0.400	-0.263	0.520	-0.335		
		0.410	-0.345	0.540	-0.338		
		0.430	-0.318	0.550	-0.351		
		0.440	-0.279	0.580	-0.370		
		0.460	-0.336	0.600	-0.348		
		0.470	-0.322	0.610	-0.365		
		0.490	-0.321	0.650	0.358		
		0.500	-0.331	0.700	-0.588		
		0.520	-0.342	0.750	-0.500		
		0.530	-0.325	0.820	-0.510		
		0.550	-0.376	0.890	-0.136		
		0.560	-0.337	0.900	-0.103		
		0.580	-0.335	0.960	0.027		
		0.590	-0.379				
		0.600	-0.387				
		0.640	-0.456				
		0.700	-0.417				
		0.750	-0.016**				
		0.820	-0.405				
		0.870	-0.278				
		0.930	-0.116				
		0.960	-0.047				
			Lower Surface				
0.020	-0.378	0.020	-0.187	0.020	-0.043	0.020	0.286
0.110	-0.223	0.060	-0.029	0.060	0.023	0.060	1.078
0.230	-0.124	0.090	-0.095	0.090	1.367	0.110	-0.078
0.400	-0.063	0.120	-0.116	0.120	-0.297	0.250	-0.222
0.490	-0.032	0.200	-0.086	0.200	-0.165	0.400	-0.203
0.630	2.118**	0.260	-0.175	0.250	-0.167	0.490	-0.250
0.750	0.063	0.400	-0.104	0.400	-0.139	0.580	-0.212
0.850	0.156	0.490	-0.108	0.490	-0.039	0.650	-0.076
0.900	0.235	0.580	-0.076	0.580	-0.126	0.750	0.155
0.960	0.181	0.640	0.115	0.650	-0.032	0.830	0.313
		0.750	0.238	0.750	0.005	0.900	0.356
		0.870	0.310	0.890	0.318	0.960	0.270
		0.930	0.237	0.930	0.268		
		0.960	0.187	0.960	-1.947**		
CN =	0.240		0.384		‡‡‡‡		0.490

Table J-2. Continued.

Flight 220, Wing sweep = 26°, Time = 9-37-0-000, MINF = 0.803, Camber = 3/6, ALPT = 8.12, BETA = -0.18, QINF = 311.0, RNPU = 2.5E+06

η = 0.93		0.76		0.59		0.40	
			Upper Surface				
x/c	CP	*x/c*	CP	*x/c*	CP	*x/c*	CP
0.020	-0.760	0.000	0.806	0.000	0.972**	0.010	-1.145
0.060	-0.714	0.020	-0.988	0.020	-0.944	0.020	-1.124
0.110	-0.638	0.040	-0.789	0.060	-2.982**	0.060	-1.161
0.200	-0.833	0.060	-0.870	0.090	-0.998	0.110	-1.228
0.230	-0.771	0.090	-0.896	0.110	-1.031	0.140	-1.325
0.400	-0.259	0.130	-0.946	0.130	-1.025	0.190	-2.215**
0.490	-0.229	0.150	-1.547	0.150	-1.121	0.250	-1.314
0.590	-0.339	0.200	-2.229	0.210	-0.122	0.400	-0.783
0.630	-0.357	0.250	-1.055	0.250	-0.313	0.490	-0.451
0.700	-0.354	0.260	-1.056	0.340	-1.121	0.580	-0.422
0.750	-0.806	0.280	-1.055	0.370	-1.113	0.650	-0.446
0.810	-0.773	0.290	-1.055	0.400	-1.131	0.700	-0.448
0.840	-0.781	0.310	-1.068	0.410	-1.966**	0.750	-0.539
0.900	-0.283	0.320	-1.068	0.430	-1.085	0.800	-0.518
0.960	-0.157	0.340	0.624	0.440	-0.747	0.830	-0.408
		0.350	-0.479**	0.460	-0.589	0.900	-0.140
		0.370	-1.022	0.490	-0.486	0.960	-0.059
		0.380	-1.078	0.500	-0.449		
		0.400	-1.013	0.520	-0.375		
		0.410	-1.036	0.540	-0.349		
		0.430	-0.735	0.550	-0.354		
		0.440	-0.833	0.580	-0.331		
		0.460	-0.421	0.600	-0.270		
		0.470	-0.348	0.610	-0.271		
		0.490	-0.324	0.650	0.590		
		0.500	-0.281	0.700	-0.402		
		0.520	-0.234	0.750	-0.491		
		0.530	-0.202	0.820	-0.567		
		0.550	-0.241	0.890	-0.116		
		0.560	-0.204	0.900	-0.087		
		0.580	-0.209	0.960	0.021		
		0.590	-0.254				
		0.600	2.138				
		0.640	-0.375				
		0.700	-0.406				
		0.750	0.028**				
		0.820	-0.439				
		0.870	-0.390				
		0.930	-0.272				
		0.960	-0.215				
			Lower Surface				
0.020	0.007	0.020	0.272	0.020	0.246	0.020	0.535
0.110	-0.037	0.060	0.221	0.060	0.258	0.060	1.077
0.230	0.086	0.090	0.134	0.090	1.096	0.110	0.147
0.400	0.036	0.120	0.103	0.120	-0.076	0.250	-0.028
0.490	0.993	0.200	0.061	0.200	0.023	0.400	-0.050
0.630	1.885**	0.260	0.026	0.250	0.042	0.490	-0.104
0.750	0.450	0.400	0.036	0.400	0.016	0.580	-0.063
0.850	0.162	0.490	0.019	0.490	-0.020	0.650	0.045
0.900	0.241	0.580	0.022	0.580	-0.006	0.750	0.263
0.960	0.149	0.640	0.228	0.650	0.002	0.830	0.418
		0.750	0.281	0.750	0.059	0.900	0.452
		0.870	0.358	0.890	0.406	0.960	0.322
		0.930	0.274	0.930	0.330		
		0.960	0.215	0.960	-1.883**		
CN =	0.784		0.737		‡‡‡‡		0.866

Table J-2. Continued.

Flight 220, Wing sweep = 26°, Time = 9-37-4-500, MINF = 0.793, Camber = 5/8, ALPT = 11.01, BETA = -1.54, QINF = 311.8, RNPU = 2.6E+06

η = 0.93		0.76		0.59		0.40	
			Upper Surface				
x/c	CP	*x/c*	CP	*x/c*	CP	*x/c*	CP
0.020	-0.783	0.000	0.724	0.000	0.911**	0.010	-1.135
0.060	-0.682	0.020	-1.096	0.020	-1.045	0.020	-1.181
0.110	-0.801	0.040	-0.845	0.060	-3.165**	0.060	-1.268
0.200	-1.111	0.060	-0.967	0.090	-1.094	0.110	-1.387
0.230	-1.053	0.090	-1.041	0.110	-1.208	0.140	-1.506
0.400	-0.815	0.130	-1.137	0.130	-1.248	0.190	-2.274**
0.490	-0.254	0.150	-1.263	0.150	-1.366	0.250	-1.524
0.590	-0.322	0.200	-1.288	0.210	-1.318	0.400	-1.071
0.630	-0.384	0.250	-1.286	0.250	-1.357	0.490	-0.849
0.700	-0.401	0.260	-1.277	0.340	-1.329	0.580	-0.486
0.750	-0.981	0.280	-1.277	0.370	-1.354	0.650	-0.487
0.810	-0.935	0.290	-1.277	0.400	-1.391	0.700	-0.475
0.840	-0.978	0.310	-1.300	0.410	-1.897**	0.750	-0.485
0.900	-0.451	0.320	-1.302	0.430	-1.314	0.800	-0.429
0.960	-0.360	0.340	-1.265	0.440	-1.274	0.830	-0.368
		0.350	-0.522**	0.460	-1.291	0.900	-0.188
		0.370	-1.277	0.490	-0.740	0.960	-0.092
		0.380	-1.329	0.500	-1.301		
		0.400	-1.260	0.520	-1.268		
		0.410	-1.200	0.540	-0.903		
		0.430	-1.190	0.550	-0.719		
		0.440	-0.769	0.580	-0.744		
		0.460	-1.234	0.600	-0.650		
		0.470	-0.717	0.610	-0.625		
		0.490	-0.687	0.650	0.467		
		0.500	-0.722	0.700	-0.553		
		0.520	-0.661	0.750	-0.564		
		0.530	-1.212	0.820	-0.369		
		0.550	-0.651	0.890	-0.389		
		0.560	-0.579	0.900	-0.263		
		0.580	-0.577	0.960	-0.173		
		0.590	-0.585				
		0.600	-0.550				
		0.640	-0.403				
		0.700	-0.369				
		0.750	0.049**				
		0.820	-0.279				
		0.870	-0.203				
		0.930	-0.201				
		0.960	-0.203				
			Lower Surface				
0.020	0.130	0.020	0.462	0.020	0.326	0.020	0.624
0.110	0.056	0.060	0.332	0.060	0.390	0.060	1.011
0.230	0.176	0.090	0.236	0.090	1.200	0.110	0.260
0.400	0.072	0.120	0.215	0.120	0.020	0.250	0.119
0.490	0.051	0.200	0.184	0.200	0.116	0.400	0.024
0.630	1.817**	0.260	0.131	0.250	0.162	0.490	-0.032
0.750	0.077	0.400	0.115	0.400	0.099	0.580	0.030
0.850	0.161	0.490	0.080	0.490	1.237	0.650	0.109
0.900	0.228	0.580	0.097	0.580	0.089	0.750	0.306
0.960	0.074	0.640	0.274	0.650	0.031	0.830	0.460
		0.750	0.314	0.750	0.094	0.900	0.498
		0.870	0.375	0.890	0.426	0.960	0.328
		0.930	0.285	0.930	0.343		
		0.960	0.187	0.960	-1.924**		
CN =	0.746		0.958		‡‡‡‡		1.063

Table J-2. Continued.

Flight 220, Wing sweep = 26°, Time = 9-37-6-500, MINF = 0.781, Camber = 6/11, ALPT = 12.94, BETA = 0.43, QINF = 308.5, RNPU = 2.6E+06

η = 0.93		0.76		0.59		0.40	
			Upper Surface				
x/c	CP	*x/c*	CP	*x/c*	CP	*x/c*	CP
0.020	-1.026	0.000	0.632	0.000	0.860**	0.010	-1.369
0.060	-0.984	0.020	-1.296	0.020	-1.205	0.020	-1.428
0.110	-0.986	0.040	-1.033	0.060	-3.420**	0.060	-1.472
0.200	-1.257	0.060	-1.159	0.090	-1.341	0.110	-1.626
0.230	-1.248	0.090	-1.264	0.110	-1.404	0.140	-1.722
0.400	-0.496	0.130	-1.339	0.130	-0.972	0.190	-2.342**
0.490	-0.317	0.150	-1.463	0.150	-0.958	0.250	-1.358
0.590	-0.423	0.200	-1.503	0.210	-0.912	0.400	-1.083
0.630	-0.449	0.250	-1.335	0.250	-0.893	0.490	-0.852
0.700	-0.475	0.260	-1.231	0.340	-0.818	0.580	-0.600
0.750	-0.937	0.280	-1.167	0.370	-0.798	0.650	-0.539
0.810	-0.914	0.290	-1.074	0.400	-0.810	0.700	-0.498
0.840	-0.981	0.310	-1.039	0.410	-1.961**	0.750	-0.479
0.900	-0.448	0.320	-1.005	0.430	-0.767	0.800	-0.492
0.960	-0.391	0.340	-0.953	0.440	-0.724	0.830	-0.462
		0.350	-0.346**	0.460	-0.729	0.900	-0.410
		0.370	-0.810	0.490	-0.704	0.960	-0.373
		0.380	-0.767	0.500	-0.740		
		0.400	-0.588	0.520	-0.707		
		0.410	-0.591	0.540	-0.711		
		0.430	-0.452	0.550	-0.736		
		0.440	-0.426	0.580	-0.709		
		0.460	-0.429	0.600	-0.666		
		0.470	-0.415	0.610	-0.641		
		0.490	-0.373	0.650	0.397		
		0.500	-0.403	0.700	-0.645		
		0.520	-0.375	0.750	-0.674		
		0.530	-0.379	0.820	-0.538		
		0.550	-0.405	0.890	-0.461		
		0.560	-0.379	0.900	-0.488		
		0.580	-0.349	0.960	-0.359		
		0.590	-0.431				
		0.600	-0.436				
		0.640	-0.441				
		0.700	-0.437				
		0.750	0.046**				
		0.820	-0.356				
		0.870	-0.354				
		0.930	-0.372				
		0.960	-0.367				
			Lower Surface				
0.020	0.220	0.020	0.651	0.020	0.554	0.020	0.743
0.110	0.168	0.060	0.463	0.060	0.515	0.060	1.107
0.230	0.214	0.090	0.363	0.090	1.184	0.110	0.380
0.400	0.130	0.120	0.338	0.120	0.196	0.250	0.230
0.490	0.131	0.200	0.210	0.200	0.163	0.400	0.166
0.630	1.793**	0.260	0.223	0.250	0.281	0.490	0.097
0.750	0.171	0.400	0.200	0.400	0.167	0.580	0.113
0.850	0.214	0.490	0.158	0.490	0.059	0.650	0.232
0.900	0.297	0.580	0.154	0.580	0.157	0.750	0.393
0.960	0.117	0.640	0.346	0.650	0.024	0.830	0.506
		0.750	0.372	0.750	0.098	0.900	0.539
		0.870	0.447	0.890	0.473	0.960	0.340
		0.930	0.326	0.930	0.361		
		0.960	0.213	0.960	-1.988**		
CN =	0.854		0.983		‡‡‡‡		1.230

Table J-2. Continued.

Flight 220, Wing sweep = 26°, Time = 9-37-10-500, MINF = 0.778, Camber = 5/8, ALPT = 9.12, BETA = -0.33, QINF = 318.7, RNPU = 2.7E+06

η = 0.93		0.76		0.59		0.40	
			Upper Surface				
x/c	CP	*x/c*	CP	*x/c*	CP	*x/c*	CP
0.020	-0.504	0.000	0.816	0.000	1.083**	0.010	-1.047
0.060	-0.593	0.020	-0.820	0.020	-0.863	0.020	-1.159
0.110	-0.814	0.040	-0.533	0.060	-3.072**	0.060	-1.214
0.200	-1.039	0.060	-0.856	0.090	-1.070	0.110	-1.350
0.230	-1.007	0.090	-1.014	0.110	-1.151	0.140	-1.524
0.400	-0.329	0.130	-1.098	0.130	-1.211	0.190	-2.361**
0.490	-0.263	0.150	-1.218	0.150	-1.333	0.250	-1.502
0.590	-0.363	0.200	-1.256	0.210	-1.292	0.400	-0.779
0.630	-0.413	0.250	-1.269	0.250	-1.329	0.490	-0.505
0.700	-0.422	0.260	-1.255	0.340	-1.327	0.580	-0.448
0.750	-0.977	0.280	-1.253	0.370	-1.308	0.650	-0.456
0.810	-0.940	0.290	-1.261	0.400	-1.296	0.700	-0.469
0.840	-0.982	0.310	-1.266	0.410	-1.992**	0.750	-0.523
0.900	-0.376	0.320	-1.269	0.430	-0.810	0.800	-0.430
0.960	-0.277	0.340	-1.223	0.440	-0.726	0.830	-0.387
		0.350	-0.507**	0.460	-0.691	0.900	-0.145
		0.370	-1.219	0.490	-0.629	0.960	-0.074
		0.380	-1.259	0.500	-0.621		
		0.400	-1.169	0.520	-0.599		
		0.410	-1.219	0.540	-0.533		
		0.430	-0.775	0.550	-0.517		
		0.440	-0.633	0.580	-0.489		
		0.460	-0.584	0.600	-0.408		
		0.470	-0.498	0.610	-0.393		
		0.490	-0.462	0.650	0.581		
		0.500	-0.422	0.700	-0.456		
		0.520	-0.396	0.750	-0.546		
		0.530	-0.342	0.820	-0.460		
		0.550	-0.327	0.890	-0.111		
		0.560	-0.267	0.900	-0.095		
		0.580	-0.262	0.960	-0.021		
		0.590	-0.270				
		0.600	-0.295				
		0.640	-0.407				
		0.700	-0.459				
		0.750	0.040**				
		0.820	-0.459				
		0.870	-0.382				
		0.930	-0.257				
		0.960	-0.218				
			Lower Surface				
0.020	0.044	0.020	0.407	0.020	0.320	0.020	0.564
0.110	0.031	0.060	0.295	0.060	0.338	0.060	1.102
0.230	0.167	0.090	0.197	0.090	1.051	0.110	0.209
0.400	0.083	0.120	0.185	0.120	0.027	0.250	0.062
0.490	0.073	0.200	0.151	0.200	0.110	0.400	0.033
0.630	1.849**	0.260	0.103	0.250	0.130	0.490	-0.022
0.750	0.139	0.400	0.098	0.400	0.071	0.580	0.008
0.850	0.192	0.490	0.084	0.490	0.025	0.650	0.137
0.900	0.286	0.580	0.094	0.580	0.072	0.750	0.342
0.960	0.127	0.640	0.274	0.650	0.018	0.830	0.462
		0.750	0.337	0.750	0.080	0.900	0.498
		0.870	0.399	0.890	0.433	0.960	0.356
		0.930	0.315	0.930	0.359		
		0.960	0.226	0.960	-1.865**		
CN =	0.686		0.896		‡‡‡‡		0.985

Table J-2. Continued.

Flight 220, Wing sweep = 26°, Time = 9-37-14-000, MINF = 0.788, Camber = 3/6, ALPT = 7.20, BETA = 0.57, QINF = 333.9, RNPU = 2.8E+06

η = 0.93		0.76		0.59		0.40	
			Upper Surface				
x/c	CP	*x/c*	CP	*x/c*	CP	*x/c*	CP
0.020	-0.428	0.000	0.863	0.000	1.044**	0.010	-0.972
0.060	-0.512	0.020	-0.779	0.020	-0.627	0.020	-1.083
0.110	-0.576	0.040	-0.526	0.060	-2.986**	0.060	-1.080
0.200	-0.843	0.060	-0.767	0.090	-0.928	0.110	-1.142
0.230	-0.597	0.090	-0.854	0.110	-0.989	0.140	-1.249
0.400	-0.290	0.130	-0.911	0.130	-0.998	0.190	-2.300**
0.490	-0.265	0.150	-0.991	0.150	-1.094	0.250	-1.236
0.590	-0.345	0.200	-0.968	0.210	-1.042	0.400	-0.403
0.630	-0.355	0.250	-1.012	0.250	-1.090	0.490	-0.380
0.700	-0.362	0.260	-1.002	0.340	-0.719	0.580	-0.396
0.750	-0.766	0.280	-0.995	0.370	-0.436	0.650	-0.464
0.810	-0.693	0.290	-0.979	0.400	-0.356	0.700	-0.453
0.840	-0.640	0.310	-0.972	0.410	-1.949**	0.750	-0.553
0.900	-0.264	0.320	-0.971	0.430	-0.335	0.800	-0.544
0.960	-0.133	0.340	-0.455	0.440	-0.301	0.830	-0.485
		0.350	-0.202**	0.460	-0.319	0.900	-0.129
		0.370	-0.268	0.490	-0.316	0.960	-0.032
		0.380	-0.289	0.500	-0.345		
		0.400	-0.197	0.520	-0.333		
		0.410	-0.270	0.540	-0.336		
		0.430	-0.257	0.550	-0.353		
		0.440	-0.236	0.580	-0.399		
		0.460	-0.294	0.600	-0.360		
		0.470	-0.290	0.610	-0.397		
		0.490	-0.303	0.650	0.350		
		0.500	-0.328	0.700	-0.597		
		0.520	-0.335	0.750	-0.545		
		0.530	-0.331	0.820	-0.657		
		0.550	-0.384	0.890	-0.145		
		0.560	-0.352	0.900	-0.114		
		0.580	-0.356	0.960	0.006		
		0.590	-0.416				
		0.600	-0.417				
		0.640	-0.522				
		0.700	-0.469				
		0.750	0.011**				
		0.820	-0.441				
		0.870	-0.434				
		0.930	-0.289				
		0.960	-0.218				
			Lower Surface				
0.020	-0.076	0.020	0.198	0.020	0.174	0.020	0.452
0.110	-0.064	0.060	0.154	0.060	0.206	0.060	1.018
0.230	0.055	0.090	0.081	0.090	0.956	0.110	0.089
0.400	0.035	0.120	0.084	0.120	-0.096	0.250	-0.046
0.490	0.023	0.200	0.035	0.200	0.009	0.400	-0.061
0.630	1.718**	0.260	-0.007	0.250	0.005	0.490	-0.115
0.750	0.100	0.400	0.012	0.400	-0.014	0.580	-0.084
0.850	0.177	0.490	-0.008	0.490	-0.004	0.650	0.043
0.900	0.260	0.580	0.015	0.580	-0.017	0.750	0.258
0.960	0.170	0.640	0.207	0.650	-0.010	0.830	0.400
		0.750	0.278	0.750	0.030	0.900	0.447
		0.870	0.338	0.890	0.386	0.960	0.314
		0.930	0.276	0.930	0.322		
		0.960	0.198	0.960	-1.795**		
CN =	0.491		0.657		‡‡‡‡		0.772

Table J-2. Continued.

Flight 226, Wing sweep = 26°, Time = 8-42-6-000, MINF = 0.801, Camber = 5/10, ALPT = 3.03, BETA = 0.31, QINF = 604.6, RNPU = 5.0E+06, CNWP = 0.2071

η = 0.93		0.76		0.59		0.40	
			Upper Surface				
x/c	CP	*x/c*	CP	*x/c*	CP	*x/c*	CP
0.020	0.466	0.000	0.357	0.000	2.800**	0.010	0.153
0.060	0.124	0.020	0.407	0.020	0.384	0.020	0.027
0.110	-0.143	0.040	0.238	0.060	-3.685**	0.060	-0.260
0.200	-0.208	0.060	0.016	0.090	-0.200	0.110	-0.473
0.230	-0.229	0.090	-0.115	0.110	-0.337	0.140	-0.673
0.400	-0.169	0.130	-0.279	0.130	-0.506	0.190	-2.225**
0.490	-0.185	0.150	-0.409	0.150	-0.424	0.250	-0.312
0.590	-0.267	0.200	-0.321	0.210	-0.386	0.400	-0.294
0.630	-0.290	0.250	-0.265	0.250	-0.283	0.490	-0.274
0.700	-0.350	0.260	-0.263	0.340	-0.299	0.580	-0.296
0.750	-1.005	0.280	-0.270	0.370	-0.304	0.650	-0.404
0.810	-0.913	0.290	-0.270	0.400	-0.295	0.700	-0.384
0.840	-0.964	0.310	-0.274	0.410	-2.719**	0.750	-0.428
0.900	-0.175	0.320	-0.271	0.430	-0.311	0.800	-0.929
0.960	-0.134	0.340	-0.261	0.440	-0.294	0.830	-0.642
		0.350	-0.224**	0.460	-0.306	0.900	-0.393
		0.370	-0.249	0.490	-0.241	0.960	-0.383
		0.380	-0.271	0.500	-0.311		
		0.400	-0.232	0.520	-0.295		
		0.410	-0.270	0.540	-0.296		
		0.430	-0.253	0.550	-0.280		
		0.440	-0.244	0.580	-0.274		
		0.460	-0.264	0.600	-0.325		
		0.470	-0.274	0.610	-0.356		
		0.490	-0.274	0.650	2.121**		
		0.500	-0.285	0.700	-0.521		
		0.520	-0.283	0.750	-0.390		
		0.530	-0.284	0.820	-1.038		
		0.550	-0.316	0.890	-0.306		
		0.560	-0.304	0.900	-0.365		
		0.580	-0.293	0.960	-0.277		
		0.590	-0.330				
		0.600	-0.337				
		0.640	-0.474				
		0.700	-0.382				
		0.750	-0.059**				
		0.820	-0.550				
		0.870	-0.312				
		0.930	-0.268				
		0.960	-0.268				
			Lower Surface				
0.020	-0.981	0.020	-0.927	0.020	-1.376	0.020	-0.389
0.110	-0.427	0.060	-0.695	0.060	-0.445	0.060	1.977**
0.230	-0.145	0.090	-0.497	0.090	0.543**	0.110	-0.248
0.400	-0.008	0.120	-0.271	0.120	-0.312	0.250	-0.283
0.490	0.039	0.200	-0.150	0.200	-0.162	0.400	-0.228
0.630	0.920**	0.260	-0.119	0.250	-0.207	0.490	-0.207
0.750	0.173	0.400	-0.069	0.400	-0.142	0.580	-0.152
0.850	0.211	0.490	-0.033	0.490	-0.049	0.650	0.065
0.900	0.287	0.580	0.035	0.580	-0.024	0.750	0.286
0.960	0.177	0.640	0.226	0.650	-0.063	0.830	0.416
		0.750	0.293	0.750	-0.020	0.900	0.468
		0.870	0.356	0.890	0.398	0.960	0.330
		0.930	0.257	0.930	0.324		
		0.960	0.161	0.960	-2.762**		
CN =	0.292		0.290		0.301		0.360

Table J-2. Continued.

Flight 226, Wing sweep = 26°, Time = 8-42-43-000, MINF = 0.804, Camber = 5/10, ALPT = 3.03, BETA = 0.19, QINF = 607.5, RNPU = 5.0E+06, CNWP = 0.2073

η = 0.93		0.76		0.59		0.40	
			Upper Surface				
x/c	CP	*x/c*	CP	*x/c*	CP	*x/c*	CP
0.020	0.471	0.000	0.346	0.000	2.790**	0.010	0.169
0.060	0.147	0.020	0.420	0.020	0.394	0.020	0.054
0.110	-0.129	0.040	0.246	0.060	-3.664**	0.060	-0.252
0.200	-0.204	0.060	0.020	0.090	-0.180	0.110	-0.445
0.230	-0.222	0.090	-0.105	0.110	-0.326	0.140	-0.630
0.400	-0.168	0.130	-0.272	0.130	-0.513	0.190	-2.211**
0.490	-0.184	0.150	-0.403	0.150	-0.413	0.250	-0.314
0.590	-0.270	0.200	-0.315	0.210	-0.379	0.400	-0.293
0.630	-0.288	0.250	-0.267	0.250	-0.279	0.490	-0.272
0.700	-0.352	0.260	-0.259	0.340	-0.294	0.580	-0.294
0.750	-0.962	0.280	-0.273	0.370	-0.307	0.650	-0.406
0.810	-0.905	0.290	-0.264	0.400	-0.290	0.700	-0.381
0.840	-0.963	0.310	-0.270	0.410	-2.703**	0.750	-0.426
0.900	-0.189	0.320	-0.269	0.430	-0.306	0.800	-0.921
0.960	-0.159	0.340	-0.260	0.440	-0.292	0.830	-0.656
		0.350	-0.227**	0.460	-0.304	0.900	-0.395
		0.370	-0.250	0.490	-0.266	0.960	-0.397
		0.380	-0.274	0.500	-0.308		
		0.400	-0.208	0.520	-0.289		
		0.410	-0.268	0.540	-0.299		
		0.430	-0.256	0.550	-0.276		
		0.440	-0.247	0.580	-0.268		
		0.460	-0.266	0.600	-0.321		
		0.470	-0.270	0.610	-0.351		
		0.490	-0.271	0.650	2.114**		
		0.500	-0.282	0.700	-0.562		
		0.520	-0.281	0.750	-0.387		
		0.530	-0.280	0.820	-1.059		
		0.550	-0.318	0.890	-0.316		
		0.560	-0.304	0.900	-0.362		
		0.580	-0.302	0.960	-0.289		
		0.590	-0.326				
		0.600	-0.337				
		0.640	-0.479				
		0.700	-0.381				
		0.750	-0.070**				
		0.820	-0.557				
		0.870	-0.316				
		0.930	-0.270				
		0.960	-0.278				
			Lower Surface				
0.020	-0.980	0.020	-0.920	0.020	-1.396	0.020	-0.425
0.110	-0.448	0.060	-0.734	0.060	-0.497	0.060	1.971**
0.230	-0.157	0.090	-0.522	0.090	0.544**	0.110	-0.301
0.400	-0.015	0.120	-0.299	0.120	-0.323	0.250	-0.292
0.490	0.035	0.200	-0.163	0.200	-0.168	0.400	-0.238
0.630	0.919**	0.260	-0.129	0.250	-0.217	0.490	-0.210
0.750	0.157	0.400	-0.074	0.400	-0.153	0.580	-0.158
0.850	0.206	0.490	-0.035	0.490	-0.060	0.650	0.061
0.900	0.283	0.580	0.031	0.580	-0.030	0.750	0.278
0.960	0.174	0.640	0.221	0.650	-0.073	0.830	0.415
		0.750	0.284	0.750	-0.027	0.900	0.465
		0.870	0.341	0.890	0.394	0.960	0.327
		0.930	0.252	0.930	0.317		
		0.960	0.158	0.960	-2.746**		
CN =	0.278		0.279		0.292		0.344

Table J-2. Continued.

Flight 226, Wing sweep = 26°, Time = 8-43-5-500, MINF = 0.801, Camber = 5/10, ALPT = 3.89, BETA = 0.40, QINF = 603.9, RNPU = 5.0E+06, CNWP = 0.2690

η = 0.93		0.76		0.59		0.40	
			Upper Surface				
x/c	CP	*x/c*	CP	*x/c*	CP	*x/c*	CP
0.020	0.398	0.000	0.466	0.000	2.803**	0.010	0.015
0.060	0.056	0.020	0.293	0.020	0.273	0.020	-0.085
0.110	-0.193	0.040	0.152	0.060	-3.689**	0.060	-0.398
0.200	-0.251	0.060	-0.069	0.090	-0.299	0.110	-0.554
0.230	-0.268	0.090	-0.215	0.110	-0.447	0.140	-0.888
0.400	-0.195	0.130	-0.385	0.130	-0.646	0.190	-2.228**
0.490	-0.205	0.150	-0.529	0.150	-0.722	0.250	-0.354
0.590	-0.281	0.200	-0.418	0.210	-0.430	0.400	-0.335
0.630	-0.302	0.250	-0.327	0.250	-0.345	0.490	-0.310
0.700	-0.358	0.260	-0.324	0.340	-0.344	0.580	-0.326
0.750	-0.961	0.280	-0.329	0.370	-0.352	0.650	-0.427
0.810	-0.900	0.290	-0.324	0.400	-0.336	0.700	-0.408
0.840	-0.958	0.310	-0.322	0.410	-2.722**	0.750	-0.439
0.900	-0.195	0.320	-0.324	0.430	-0.349	0.800	-0.930
0.960	-0.142	0.340	-0.308	0.440	-0.334	0.830	-0.636
		0.350	-0.222**	0.460	-0.340	0.900	-0.394
		0.370	-0.290	0.490	-0.297	0.960	-0.385
		0.380	-0.312	0.500	-0.346		
		0.400	-0.263	0.520	-0.322		
		0.410	-0.304	0.540	-0.323		
		0.430	-0.286	0.550	-0.304		
		0.440	-0.276	0.580	-0.302		
		0.460	-0.298	0.600	-0.342		
		0.470	-0.299	0.610	-0.376		
		0.490	-0.297	0.650	2.123**		
		0.500	-0.305	0.700	-0.604		
		0.520	-0.307	0.750	-0.411		
		0.530	-0.306	0.820	-1.048		
		0.550	-0.336	0.890	-0.299		
		0.560	-0.329	0.900	-0.363		
		0.580	-0.313	0.960	-0.279		
		0.590	-0.350				
		0.600	-0.355				
		0.640	-0.602				
		0.700	-0.381				
		0.750	-0.039**				
		0.820	-0.536				
		0.870	-0.286				
		0.930	-0.259				
		0.960	-0.256				
			Lower Surface				
0.020	-0.979	0.020	-0.928	0.020	-1.197	0.020	-0.283
0.110	-0.236	0.060	-0.427	0.060	-0.188	0.060	1.979**
0.230	-0.093	0.090	-0.268	0.090	0.544**	0.110	-0.156
0.400	0.007	0.120	-0.148	0.120	-0.238	0.250	-0.227
0.490	0.035	0.200	-0.098	0.200	-0.101	0.400	-0.193
0.630	0.921**	0.260	-0.098	0.250	-0.164	0.490	-0.178
0.750	0.165	0.400	-0.060	0.400	-0.121	0.580	-0.133
0.850	0.218	0.490	-0.030	0.490	-0.035	0.650	0.083
0.900	0.296	0.580	0.032	0.580	-0.021	0.750	0.298
0.960	0.168	0.640	0.232	0.650	-0.049	0.830	0.432
		0.750	0.301	0.750	-0.017	0.900	0.479
		0.870	0.368	0.890	0.422	0.960	0.334
		0.930	0.272	0.930	0.344		
		0.960	0.172	0.960	-2.766**		
CN =	0.345		0.367		0.391		0.441

Table J-2. Continued.

Flight 226, Wing sweep = 26°, Time = 8-43-13-000, MINF = 0.810, Camber = 5/10, ALPT = 6.01, BETA = 0.66, QINF = 615.0, RNPU = 5.0E+06, CNWP = 0.3171

η = 0.93		0.76		0.59		0.40	
			Upper Surface				
x/c	CP	*x/c*	CP	*x/c*	CP	*x/c*	CP
0.020	0.201	0.000	0.713	0.000	2.761**	0.010	-0.367
0.060	-0.135	0.020	0.063	0.020	-0.047	0.020	-0.358
0.110	-0.371	0.040	-0.063	0.060	-3.614**	0.060	-0.732
0.200	-0.781	0.060	-0.316	0.090	-0.479	0.110	-0.872
0.230	-0.202	0.090	-0.401	0.110	-0.611	0.140	-1.073
0.400	-0.242	0.130	-0.598	0.130	-0.786	0.190	-2.179**
0.490	-0.236	0.150	-0.786	0.150	-0.882	0.250	-0.754
0.590	-0.313	0.200	-0.821	0.210	-0.891	0.400	-0.402
0.630	-0.339	0.250	-0.863	0.250	-0.905	0.490	-0.357
0.700	-0.362	0.260	-0.865	0.340	-0.392	0.580	-0.381
0.750	-0.911	0.280	-0.855	0.370	-0.319	0.650	-0.473
0.810	-0.784	0.290	-0.847	0.400	-0.307	0.700	-0.441
0.840	-0.832	0.310	-0.469	0.410	-2.665**	0.750	-0.486
0.900	-0.268	0.320	-0.389	0.430	-0.327	0.800	-0.905
0.960	-0.265	0.340	-0.264	0.440	-0.317	0.830	-0.653
		0.350	-0.141**	0.460	-0.332	0.900	-0.421
		0.370	-0.237	0.490	-0.306	0.960	-0.390
		0.380	-0.269	0.500	-0.352		
		0.400	-0.243	0.520	-0.334		
		0.410	-0.281	0.540	-0.342		
		0.430	-0.277	0.550	-0.318		
		0.440	-0.276	0.580	-0.315		
		0.460	-0.301	0.600	-0.361		
		0.470	-0.316	0.610	-0.386		
		0.490	-0.313	0.650	2.093**		
		0.500	-0.321	0.700	-0.626		
		0.520	-0.327	0.750	-0.508		
		0.530	-0.326	0.820	-0.908		
		0.550	-0.359	0.890	-0.321		
		0.560	-0.349	0.900	-0.383		
		0.580	-0.334	0.960	-0.295		
		0.590	-0.371				
		0.600	-0.367				
		0.640	-0.666				
		0.700	-0.495				
		0.750	-0.018**				
		0.820	-0.575				
		0.870	-0.306				
		0.930	-0.297				
		0.960	-0.293				
			Lower Surface				
0.020	-0.500	0.020	-0.399	0.020	-0.207	0.020	0.210
0.110	-0.148	0.060	-0.042	0.060	0.031	0.060	1.952**
0.230	-0.002	0.090	-0.063	0.090	0.543**	0.110	0.015
0.400	0.020	0.120	-0.021	0.120	-0.084	0.250	-0.112
0.490	0.043	0.200	-0.001	0.200	-0.003	0.400	-0.110
0.630	0.913**	0.260	-0.020	0.250	-0.057	0.490	-0.116
0.750	0.176	0.400	-0.010	0.400	-0.055	0.580	-0.081
0.850	0.224	0.490	0.001	0.490	-0.015	0.650	0.119
0.900	0.302	0.580	0.053	0.580	0.013	0.750	0.336
0.960	0.142	0.640	0.269	0.650	-0.022	0.830	0.465
		0.750	0.339	0.750	0.003	0.900	0.506
		0.870	0.426	0.890	0.461	0.960	0.349
		0.930	0.311	0.930	0.368		
		0.960	0.197	0.960	-2.707**		
CN =	0.432		0.562		0.544		0.638

Table J-2. Continued.

Flight 226, Wing sweep = 26°, Time = 8-43-17-000, MINF = 0.804, Camber = 5/6, ALPT = 6.97, BETA = 0.74, QINF = 605.8, RNPU = 5.0E+06, CNWP = 0.3917

η = 0.93		0.76		0.59		0.40	
			Upper Surface				
x/c	CP	*x/c*	CP	*x/c*	CP	*x/c*	CP
0.020	0.033	0.000	0.823	0.000	2.808**	0.010	-0.748
0.060	-0.263	0.020	-0.171	0.020	-0.242	0.020	-0.634
0.110	-0.461	0.040	-0.237	0.060	-3.665**	0.060	-0.849
0.200	-0.876	0.060	-0.464	0.090	-0.713	0.110	-1.033
0.230	-0.754	0.090	-0.522	0.110	-0.764	0.140	-1.213
0.400	-0.217	0.130	-0.699	0.130	-0.908	0.190	-2.208**
0.490	-0.231	0.150	-0.868	0.150	-0.977	0.250	-1.157
0.590	-0.315	0.200	-0.910	0.210	-0.978	0.400	-0.438
0.630	-0.334	0.250	-0.958	0.250	-0.916	0.490	-0.382
0.700	-0.362	0.260	-0.975	0.340	-1.021	0.580	-0.384
0.750	-0.760	0.280	-0.975	0.370	-1.020	0.650	-0.484
0.810	-0.672	0.290	-0.978	0.400	-0.908	0.700	-0.460
0.840	-0.690	0.310	-0.804	0.410	-2.701**	0.750	-0.518
0.900	-0.234	0.320	-0.956	0.430	-0.425	0.800	-0.914
0.960	-0.086	0.340	-0.858	0.440	-0.350	0.830	-0.825
		0.350	-0.447**	0.460	-0.319	0.900	-0.419
		0.370	-0.913	0.490	-0.225	0.960	-0.301
		0.380	-0.965	0.500	-0.297		
		0.400	-0.440	0.520	-0.286		
		0.410	-0.339	0.540	-0.288		
		0.430	-0.252	0.550	-0.282		
		0.440	-0.217	0.580	-0.293		
		0.460	-0.211	0.600	-0.331		
		0.470	-0.203	0.610	-0.357		
		0.490	-0.213	0.650	2.129**		
		0.500	-0.230	0.700	-0.590		
		0.520	-0.230	0.750	-0.449		
		0.530	-0.250	0.820	-0.932		
		0.550	-0.297	0.890	-0.258		
		0.560	-0.297	0.900	-0.307		
		0.580	-0.294	0.960	-0.246		
		0.590	-0.323				
		0.600	-0.339				
		0.640	-0.550				
		0.700	-0.405				
		0.750	-0.034**				
		0.820	-0.499				
		0.870	-0.258				
		0.930	-0.248				
		0.960	-0.272				
			Lower Surface				
0.020	-0.285	0.020	-0.163	0.020	-0.019	0.020	0.320
0.110	-0.099	0.060	0.061	0.060	0.131	0.060	1.986**
0.230	0.057	0.090	0.029	0.090	0.555**	0.110	0.094
0.400	0.009	0.120	0.036	0.120	0.000	0.250	-0.043
0.490	0.034	0.200	0.057	0.200	0.056	0.400	-0.054
0.630	0.931**	0.260	0.026	0.250	0.000	0.490	-0.073
0.750	0.092	0.400	0.009	0.400	-0.008	0.580	-0.044
0.850	0.148	0.490	0.010	0.490	-0.015	0.650	0.152
0.900	0.234	0.580	0.031	0.580	0.038	0.750	0.364
0.960	0.160	0.640	0.243	0.650	-0.032	0.830	0.479
		0.750	0.248	0.750	0.014	0.900	0.526
		0.870	0.287	0.890	0.469	0.960	0.373
		0.930	0.175	0.930	0.373		
		0.960	0.074	0.960	-2.744**		
CN =	0.456		0.599		0.666		0.782

Table J-2. Continued.

Flight 226, Wing sweep = 26°, Time = 8-43-22-500, MINF = 0.790, Camber = 5/-1, ALPT = 8.20, BETA = 0.83, QINF = 577.9, RNPU = 4.8E+06, CNWP = 0.4390

η = 0.93		0.76		0.59		0.40	
			Upper Surface				
x/c	CP	*x/c*	CP	*x/c*	CP	*x/c*	CP
0.020	-0.254	0.000	0.855	0.000	2.967**	0.010	-0.909
0.060	-0.523	0.020	-0.527	0.020	-0.610	0.020	-1.015
0.110	-0.688	0.040	-0.451	0.060	-3.818**	0.060	-1.037
0.200	-0.965	0.060	-0.735	0.090	-0.936	0.110	-1.188
0.230	-0.889	0.090	-0.827	0.110	-0.993	0.140	-1.356
0.400	-0.226	0.130	-0.840	0.130	-1.113	0.190	-2.291**
0.490	-0.225	0.150	-1.045	0.150	-1.147	0.250	-1.341
0.590	-0.276	0.200	-1.070	0.210	-1.156	0.400	-0.675
0.630	-0.255	0.250	-1.113	0.250	-0.937	0.490	-0.452
0.700	-0.192	0.260	-1.125	0.340	-1.206	0.580	-0.419
0.750	-0.177	0.280	-1.118	0.370	-1.199	0.650	-0.505
0.810	-0.160	0.290	-1.125	0.400	-1.188	0.700	-0.509
0.840	-0.156	0.310	-0.819	0.410	-2.808**	0.750	-0.590
0.900	-0.167	0.320	-1.126	0.430	-1.107	0.800	-0.601
0.960	-0.074	0.340	-0.876	0.440	-0.698	0.830	-0.589
		0.350	-0.475**	0.460	-0.588	0.900	-0.198
		0.370	-0.933	0.490	-0.462	0.960	-0.152
		0.380	-1.145	0.500	-0.441		
		0.400	-1.066	0.520	-0.389		
		0.410	-0.829	0.540	-0.342		
		0.430	-0.631	0.550	-0.310		
		0.440	-0.502	0.580	-0.291		
		0.460	-0.411	0.600	-0.318		
		0.470	-0.344	0.610	-0.326		
		0.490	-0.291	0.650	2.256**		
		0.500	-0.261	0.700	-0.463		
		0.520	-0.236	0.750	-0.460		
		0.530	-0.219	0.820	-0.803		
		0.550	-0.247	0.890	-0.175		
		0.560	-0.240	0.900	-0.143		
		0.580	-0.257	0.960	-0.098		
		0.590	-0.276				
		0.600	-0.291				
		0.640	-0.421				
		0.700	-0.423				
		0.750	-0.111**				
		0.820	-0.616				
		0.870	-0.419				
		0.930	-0.319				
		0.960	-0.252				
			Lower Surface				
0.020	-0.084	0.020	0.107	0.020	0.203	0.020	0.516
0.110	-0.022	0.060	0.194	0.060	0.264	0.060	2.106**
0.230	0.114	0.090	0.144	0.090	0.606**	0.110	0.178
0.400	-0.012	0.120	0.153	0.120	0.101	0.250	0.031
0.490	-0.039	0.200	0.114	0.200	0.111	0.400	0.009
0.630	1.000**	0.260	0.085	0.250	0.081	0.490	-0.004
0.750	-0.055	0.400	0.040	0.400	0.039	0.580	0.014
0.850	-0.018	0.490	0.026	0.490	-0.045	0.650	0.178
0.900	0.033	0.580	0.022	0.580	0.068	0.750	0.396
0.960	0.064	0.640	0.194	0.650	-0.087	0.830	0.504
		0.750	0.112	0.750	0.046	0.900	0.543
		0.870	0.126	0.890	0.470	0.960	0.380
		0.930	0.064	0.930	0.381		
		0.960	0.003	0.960	-2.853**		
CN =	0.353		0.700		0.764		0.892

Table J-2. Continued.

Flight 226, Wing sweep = 26°, Time = 8-43-29-000, MINF = 0.791, Camber = 5/-1, ALPT = 8.04, BETA = 0.66, QINF = 573.9, RNPU = 4.8E+06, CNWP = 0.4273

η = 0.93		0.76		0.59		0.40	
			Upper Surface				
x/c	CP	*x/c*	CP	*x/c*	CP	*x/c*	CP
0.020	-0.232	0.000	0.861	0.000	3.010**	0.010	-0.912
0.060	-0.510	0.020	-0.489	0.020	-0.543	0.020	-1.001
0.110	-0.652	0.040	-0.439	0.060	-3.822**	0.060	-1.000
0.200	-0.955	0.060	-0.716	0.090	-0.907	0.110	-1.183
0.230	-0.884	0.090	-0.817	0.110	-0.969	0.140	-1.347
0.400	-0.227	0.130	-0.824	0.130	-1.097	0.190	-2.285**
0.490	-0.236	0.150	-1.040	0.150	-1.132	0.250	-1.350
0.590	-0.275	0.200	-1.056	0.210	-1.150	0.400	-0.641
0.630	-0.255	0.250	-1.094	0.250	-0.921	0.490	-0.438
0.700	-0.199	0.260	-1.113	0.340	-1.183	0.580	-0.424
0.750	-0.173	0.280	-1.125	0.370	-1.182	0.650	-0.508
0.810	-0.165	0.290	-1.118	0.400	-1.180	0.700	-0.509
0.840	-0.165	0.310	-0.802	0.410	-2.805**	0.750	-0.587
0.900	-0.166	0.320	-1.116	0.430	-0.918	0.800	-0.622
0.960	-0.078	0.340	-0.860	0.440	-0.635	0.830	-0.662
		0.350	-0.470**	0.460	-0.548	0.900	-0.221
		0.370	-0.917	0.490	-0.434	0.960	-0.153
		0.380	-1.139	0.500	-0.413		
		0.400	-1.063	0.520	-0.357		
		0.410	-0.835	0.540	-0.323		
		0.430	-0.547	0.550	-0.293		
		0.440	-0.448	0.580	-0.284		
		0.460	-0.375	0.600	-0.308		
		0.470	-0.314	0.610	-0.329		
		0.490	-0.262	0.650	2.294**		
		0.500	-0.254	0.700	-0.472		
		0.520	-0.222	0.750	-0.465		
		0.530	-0.214	0.820	-0.805		
		0.550	-0.257	0.890	-0.194		
		0.560	-0.252	0.900	-0.183		
		0.580	-0.253	0.960	-0.145		
		0.590	-0.293				
		0.600	-0.293				
		0.640	-0.426				
		0.700	-0.428				
		0.750	-0.130**				
		0.820	-0.579				
		0.870	-0.412				
		0.930	-0.298				
		0.960	-0.236				
			Lower Surface				
0.020	-0.102	0.020	0.069	0.020	0.188	0.020	0.495
0.110	-0.037	0.060	0.178	0.060	0.245	0.060	2.142**
0.230	0.112	0.090	0.133	0.090	0.632**	0.110	0.171
0.400	-0.009	0.120	0.124	0.120	0.076	0.250	0.018
0.490	-0.043	0.200	0.108	0.200	0.114	0.400	-0.003
0.630	1.029**	0.260	0.074	0.250	0.078	0.490	-0.007
0.750	-0.069	0.400	0.046	0.400	0.031	0.580	0.006
0.850	-0.033	0.490	0.021	0.490	-0.049	0.650	0.187
0.900	0.040	0.580	0.025	0.580	0.076	0.750	0.391
0.960	0.058	0.640	0.211	0.650	-0.103	0.830	0.507
		0.750	0.102	0.750	0.035	0.900	0.546
		0.870	0.136	0.890	0.488	0.960	0.385
		0.930	0.068	0.930	0.395		
		0.960	-0.001	0.960	-2.851**		
CN =	0.344		0.685		0.751		0.889

Table J-2. Continued.

Flight 220, Wing sweep = 26°, Time = 9-43-0-000, MINF = 0.801, Camber = 1/4, ALPT = 5.00, BETA = 0.02, QINF = 297.8, RNPU = 2.4E+06

η = 0.93		0.76		0.59		0.40	
			Upper Surface				
x/c	CP	*x/c*	CP	*x/c*	CP	*x/c*	CP
0.020	-0.215	0.000	0.863	0.000	0.870**	0.010	-0.996
0.060	-0.224	0.020	-0.615	0.020	-0.567	0.020	-0.989
0.110	-0.310	0.040	-0.392	0.060	-2.885**	0.060	-0.837
0.200	-0.254	0.060	-0.534	0.090	-0.773	0.110	-0.898
0.230	-0.345	0.090	-0.510	0.110	-0.694	0.140	-0.927
0.400	-0.263	0.130	-0.544	0.130	-0.465	0.190	-2.226**
0.490	-0.234	0.150	-0.552	0.150	-0.547	0.250	-0.452
0.590	-0.307	0.200	-0.465	0.210	-0.556	0.400	-0.386
0.630	-0.288	0.250	-0.419	0.250	-0.446	0.490	-0.384
0.700	-0.275	0.260	-0.355	0.340	-0.384	0.580	-0.355
0.750	-0.363	0.280	-0.400	0.370	-0.402	0.650	-0.425
0.810	-0.370	0.290	-0.376	0.400	-0.387	0.700	-0.420
0.840	-0.331	0.310	-0.391	0.410	-1.831**	0.750	-0.506
0.900	-0.167	0.320	-0.371	0.430	-0.378	0.800	-0.495
0.960	-0.053	0.340	-0.359	0.440	-0.364	0.830	-0.435
		0.350	-0.263**	0.460	-0.367	0.900	-0.177
		0.370	-0.322	0.490	-0.310	0.960	-0.011
		0.380	-0.372	0.500	-0.372		
		0.400	-0.268	0.520	-0.338		
		0.410	-0.349	0.540	-0.341		
		0.430	-0.324	0.550	-0.354		
		0.440	-0.272	0.580	-0.371		
		0.460	-0.339	0.600	-0.354		
		0.470	-0.333	0.610	-0.384		
		0.490	-0.320	0.650	0.383		
		0.500	-0.376	0.700	-0.614		
		0.520	-0.368	0.750	-0.521		
		0.530	-0.321	0.820	-0.489		
		0.550	-0.386	0.890	-0.142		
		0.560	-0.334	0.900	-0.111		
		0.580	-0.353	0.960	0.019		
		0.590	-0.389				
		0.600	-0.406				
		0.640	-0.460				
		0.700	-0.410				
		0.750	-0.009**				
		0.820	-0.394				
		0.870	-0.284				
		0.930	-0.126				
		0.960	-0.060				
			Lower Surface				
0.020	-0.359	0.020	-0.157	0.020	-0.024	0.020	0.287
0.110	-0.204	0.060	-0.042	0.060	0.038	0.060	1.086
0.230	-0.120	0.090	-0.097	0.090	1.233	0.110	-0.070
0.400	-0.030	0.120	-0.137	0.120	-0.332	0.250	-0.209
0.490	-0.044	0.200	-0.070	0.200	-0.165	0.400	-0.204
0.630	1.923**	0.260	-0.186	0.250	-0.152	0.490	-0.244
0.750	0.053	0.400	-0.099	0.400	-0.138	0.580	-0.227
0.850	0.147	0.490	-0.110	0.490	-0.051	0.650	-0.082
0.900	0.240	0.580	-0.074	0.580	-0.125	0.750	0.147
0.960	0.168	0.640	0.113	0.650	-0.051	0.830	0.308
		0.750	0.221	0.750	-0.029	0.900	0.351
		0.870	0.262	0.890	0.305	0.960	0.257
		0.930	0.229	0.930	0.254		
		0.960	0.171	0.960	-1.957**		
CN =	0.244		0.386		‡‡‡‡		0.499

Table J-2. Continued.

Flight 220, Wing sweep = 26°, Time = 9-43-15-000, MINF = 0.805, Camber = 1/5, ALPT = 6.23, BETA = -0.44, QINF = 303.0, RNPU = 2.5E+06

η = 0.93		0.76		0.59		0.40	
			Upper Surface				
x/c	CP	*x/c*	CP	*x/c*	CP	*x/c*	CP
0.020	-0.477	0.000	0.842	0.000	0.928**	0.010	-0.927
0.060	-0.465	0.020	-0.674	0.020	-0.784	0.020	-1.066
0.110	-0.439	0.040	-0.637	0.060	-2.973**	0.060	-1.026
0.200	-0.316	0.060	-0.759	0.090	-0.879	0.110	-1.019
0.230	-0.387	0.090	-0.767	0.110	-0.917	0.140	-1.098
0.400	-0.278	0.130	-0.803	0.130	-0.841	0.190	-2.207**
0.490	-0.249	0.150	-0.830	0.150	-0.920	0.250	-0.850
0.590	-0.300	0.200	-0.757	0.210	-0.876	0.400	-0.369
0.630	-0.337	0.250	-0.729	0.250	-0.888	0.490	-0.367
0.700	-0.316	0.260	-0.434	0.340	-0.322	0.580	-0.386
0.750	-0.428	0.280	-0.317	0.370	-0.339	0.650	-0.433
0.810	-0.424	0.290	-0.299	0.400	-0.355	0.700	-0.429
0.840	-0.404	0.310	-0.321	0.410	-1.819**	0.750	-0.523
0.900	-0.201	0.320	-0.324	0.430	-0.361	0.800	-0.581
0.960	-0.084	0.340	-0.308	0.440	-0.333	0.830	-0.511
		0.350	-0.207**	0.460	-0.362	0.900	-0.146
		0.370	-0.306	0.490	-0.303	0.960	-0.001
		0.380	-0.359	0.500	-0.374		
		0.400	-0.282	0.520	-0.339		
		0.410	-0.358	0.540	-0.367		
		0.430	-0.328	0.550	-0.350		
		0.440	-0.257	0.580	-0.357		
		0.460	-0.373	0.600	-0.347		
		0.470	-0.335	0.610	-0.372		
		0.490	-0.340	0.650	0.343		
		0.500	-0.350	0.700	-0.633		
		0.520	-0.368	0.750	-0.626		
		0.530	-0.341	0.820	-0.621		
		0.550	-0.391	0.890	-0.126		
		0.560	-0.361	0.900	-0.095		
		0.580	-0.370	0.960	0.023		
		0.590	-0.406				
		0.600	-0.408				
		0.640	-0.605				
		0.700	-0.429				
		0.750	0.001**				
		0.820	-0.429				
		0.870	-0.294				
		0.930	-0.165				
		0.960	-0.103				
			Lower Surface				
0.020	-0.174	0.020	0.044	0.020	0.124	0.020	0.426
0.110	-0.132	0.060	0.077	0.060	0.140	0.060	1.100
0.230	-0.070	0.090	0.013	0.090	1.193	0.110	0.001
0.400	-0.005	0.120	-0.023	0.120	-0.229	0.250	-0.131
0.490	-0.004	0.200	-0.026	0.200	-0.092	0.400	-0.132
0.630	1.871**	0.260	-0.101	0.250	-0.075	0.490	-0.186
0.750	0.058	0.400	-0.046	0.400	-0.077	0.580	-0.174
0.850	0.147	0.490	-0.064	0.490	-0.033	0.650	-0.041
0.900	0.240	0.580	-0.050	0.580	-0.077	0.750	0.197
0.960	0.174	0.640	0.151	0.650	-0.033	0.830	0.338
		0.750	0.248	0.750	-0.018	0.900	0.394
		0.870	0.305	0.890	0.324	0.960	0.290
		0.930	0.257	0.930	0.293		
		0.960	0.197	0.960	-1.937**		
CN =	0.327		0.513		‡‡‡‡		0.632

Table J-2. Continued.

Flight 220, Wing sweep = 26°, Time = 9-43-16-000, MINF = 0.805, Camber = 2/5, ALPT = 6.96, BETA = -0.27, QINF = 304.6, RNPU = 2.5E+06

η = 0.93		0.76		0.59		0.40	
			Upper Surface				
x/c	CP	*x/c*	CP	*x/c*	CP	*x/c*	CP
0.020	-0.585	0.000	0.836	0.000	0.923**	0.010	-1.073
0.060	-0.502	0.020	-0.752	0.020	-0.851	0.020	-1.059
0.110	-0.623	0.040	-0.702	0.060	-3.019**	0.060	-1.075
0.200	-0.702	0.060	-0.809	0.090	-0.909	0.110	-1.083
0.230	-0.487	0.090	-0.815	0.110	-0.975	0.140	-1.173
0.400	-0.285	0.130	-0.889	0.130	-0.911	0.190	-2.202**
0.490	-0.251	0.150	-0.914	0.150	-1.007	0.250	-1.130
0.590	-0.333	0.200	-0.884	0.210	-0.960	0.400	-0.394
0.630	-0.347	0.250	-0.936	0.250	-0.997	0.490	-0.367
0.700	-0.341	0.260	-0.913	0.340	-0.965	0.580	-0.382
0.750	-0.721	0.280	-0.931	0.370	-0.477	0.650	-0.448
0.810	-0.655	0.290	-0.908	0.400	-0.375	0.700	-0.420
0.840	-0.592	0.310	-0.910	0.410	-1.817**	0.750	-0.527
0.900	-0.235	0.320	-0.895	0.430	-0.308	0.800	-0.577
0.960	-0.126	0.340	-0.547	0.440	-0.253	0.830	-0.525
		0.350	-0.241**	0.460	-0.279	0.900	-0.135
		0.370	-0.247	0.490	-0.227	0.960	-0.022
		0.380	-0.283	0.500	-0.319		
		0.400	-0.166	0.520	-0.311		
		0.410	-0.248	0.540	-0.303		
		0.430	-0.228	0.550	-0.317		
		0.440	-0.194	0.580	-0.340		
		0.460	-0.279	0.600	-0.341		
		0.470	-0.262	0.610	-0.357		
		0.490	-0.280	0.650	0.390		
		0.500	-0.315	0.700	-0.619		
		0.520	-0.335	0.750	-0.565		
		0.530	-0.322	0.820	-0.812		
		0.550	-0.372	0.890	-0.131		
		0.560	-0.333	0.900	-0.098		
		0.580	-0.340	0.960	0.026		
		0.590	-0.388				
		0.600	-0.404				
		0.640	-0.567				
		0.700	-0.431				
		0.750	0.008**				
		0.820	-0.398				
		0.870	-0.401				
		0.930	-0.255				
		0.960	-0.196				
			Lower Surface				
0.020	-0.147	0.020	0.108	0.020	0.161	0.020	0.462
0.110	-0.098	0.060	0.139	0.060	0.199	0.060	1.101
0.230	-0.026	0.090	0.051	0.090	1.179	0.110	0.043
0.400	0.020	0.120	0.005	0.120	-0.198	0.250	-0.099
0.490	-0.004	0.200	-0.030	0.200	-0.024	0.400	-0.092
0.630	1.853**	0.260	-0.058	0.250	-0.031	0.490	-0.156
0.750	0.087	0.400	-0.031	0.400	-0.050	0.580	-0.141
0.850	0.172	0.490	-0.035	0.490	-0.040	0.650	-0.011
0.900	0.249	0.580	-0.006	0.580	-0.048	0.750	0.207
0.960	0.168	0.640	0.183	0.650	-0.026	0.830	0.374
		0.750	0.266	0.750	-0.011	0.900	0.417
		0.870	0.329	0.890	0.365	0.960	0.286
		0.930	0.252	0.930	0.317		
		0.960	0.195	0.960	-1.915**		
CN =	0.438		0.603		‡‡‡‡		0.712

Table J-2. Continued.

Flight 220, Wing sweep = 26°, Time = 9-43-18-000, MINF = 0.806, Camber = 3/7, ALPT = 8.04, BETA = -0.50, QINF = 307.9, RNPU = 2.5E+06

η = 0.93		0.76		0.59		0.40	
			Upper Surface				
x/c	CP	*x/c*	CP	*x/c*	CP	*x/c*	CP
0.020	-0.701	0.000	0.815	0.000	0.923**	0.010	-1.059
0.060	-0.633	0.020	-0.909	0.020	-0.903	0.020	-1.105
0.110	-0.708	0.040	-0.737	0.060	-3.001**	0.060	-1.115
0.200	-0.825	0.060	-0.822	0.090	-0.981	0.110	-1.210
0.230	-0.832	0.090	-0.875	0.110	-1.028	0.140	-1.325
0.400	-0.279	0.130	-0.956	0.130	-1.030	0.190	-2.198**
0.490	-0.235	0.150	-1.041	0.150	-1.143	0.250	-1.303
0.590	-0.342	0.200	-1.007	0.210	-1.081	0.400	-0.829
0.630	-0.357	0.250	-1.071	0.250	-1.138	0.490	-0.518
0.700	-0.365	0.260	-1.052	0.340	-1.107	0.580	-0.435
0.750	-0.851	0.280	-1.067	0.370	-1.089	0.650	-0.459
0.810	-0.792	0.290	-1.053	0.400	-1.196	0.700	-0.442
0.840	-0.822	0.310	-1.075	0.410	-1.817**	0.750	-0.548
0.900	-0.294	0.320	-1.065	0.430	-1.100	0.800	-0.513
0.960	-0.169	0.340	-1.036	0.440	-1.085	0.830	-0.416
		0.350	-0.493**	0.460	-0.971	0.900	-0.139
		0.370	-1.029	0.490	-0.546	0.960	-0.087
		0.380	-1.085	0.500	-0.544		
		0.400	-0.988	0.520	-0.481		
		0.410	-1.043	0.540	-0.423		
		0.430	-1.005	0.550	-0.400		
		0.440	-0.989	0.580	-0.386		
		0.460	-0.718	0.600	-0.302		
		0.470	-0.484	0.610	-0.291		
		0.490	-0.391	0.650	0.587		
		0.500	-0.355	0.700	-0.414		
		0.520	-0.330	0.750	-0.514		
		0.530	-0.250	0.820	-0.628		
		0.550	-0.297	0.890	-0.131		
		0.560	-0.216	0.900	-0.103		
		0.580	-0.229	0.960	0.015		
		0.590	-0.288				
		0.600	-0.285				
		0.640	-0.370				
		0.700	-0.420				
		0.750	0.025**				
		0.820	-0.461				
		0.870	-0.444				
		0.930	-0.311				
		0.960	-0.246				
			Lower Surface				
0.020	-0.069	0.020	0.237	0.020	0.229	0.020	0.537
0.110	-0.061	0.060	0.191	0.060	0.244	0.060	1.099
0.230	0.073	0.090	0.106	0.090	1.147	0.110	0.125
0.400	0.026	0.120	0.086	0.120	-0.099	0.250	-0.015
0.490	0.020	0.200	0.051	0.200	0.019	0.400	-0.036
0.630	1.815**	0.260	0.002	0.250	0.028	0.490	-0.108
0.750	0.110	0.400	0.019	0.400	-0.001	0.580	-0.082
0.850	0.168	0.490	0.001	0.490	-0.009	0.650	0.042
0.900	0.257	0.580	0.026	0.580	-0.002	0.750	0.267
0.960	0.153	0.640	0.231	0.650	-0.037	0.830	0.396
		0.750	0.281	0.750	0.016	0.900	0.439
		0.870	0.344	0.890	0.392	0.960	0.304
		0.930	0.273	0.930	0.330		
		0.960	0.199	0.960	-1.925**		
CN =	0.555		0.770		‡‡‡‡		0.875

Table J-2. Continued.

Flight 220, Wing sweep = 26°, Time = 9-43-19-000, MINF = 0.806, Camber = 3/2, ALPT = 9.05, BETA = -0.30, QINF = 309.7, RNPU = 2.5E+06

η = 0.93		0.76		0.59		0.40	
			Upper Surface				
x/c	CP	*x/c*	CP	*x/c*	CP	*x/c*	CP
0.020	-0.851	0.000	0.779	0.000	0.933**	0.010	-1.098
0.060	-0.787	0.020	-1.068	0.020	-0.974	0.020	-1.117
0.110	-0.811	0.040	-0.819	0.060	-3.051**	0.060	-1.215
0.200	-0.935	0.060	-0.921	0.090	-1.061	0.110	-1.316
0.230	-0.866	0.090	-0.961	0.110	-1.107	0.140	-1.405
0.400	-0.844	0.130	-1.031	0.130	-1.089	0.190	-2.199**
0.490	-0.261	0.150	-1.129	0.150	-1.226	0.250	-1.405
0.590	-0.276	0.200	-1.115	0.210	-1.158	0.400	-0.963
0.630	-0.324	0.250	-1.142	0.250	-1.199	0.490	-0.791
0.700	-0.277	0.260	-1.122	0.340	-1.202	0.580	-0.578
0.750	-0.390	0.280	-1.130	0.370	-1.196	0.650	-0.456
0.810	-0.397	0.290	-1.130	0.400	-1.216	0.700	-0.448
0.840	-0.385	0.310	-1.149	0.410	-1.819**	0.750	-0.501
0.900	-0.289	0.320	-1.147	0.430	-1.194	0.800	-0.468
0.960	-0.174	0.340	-1.113	0.440	-1.162	0.830	-0.345
		0.350	-0.515**	0.460	-1.180	0.900	-0.163
		0.370	-1.118	0.490	-1.133	0.960	-0.079
		0.380	-1.169	0.500	-1.191		
		0.400	-1.115	0.520	-1.147		
		0.410	-1.130	0.540	-0.878		
		0.430	-1.084	0.550	-0.738		
		0.440	-1.052	0.580	-0.673		
		0.460	-1.136	0.600	-0.564		
		0.470	-1.099	0.610	-0.502		
		0.490	-1.125	0.650	0.571		
		0.500	-1.145	0.700	-0.417		
		0.520	-1.124	0.750	-0.459		
		0.530	-0.724	0.820	-0.405		
		0.550	-0.588	0.890	-0.111		
		0.560	-0.477	0.900	-0.076		
		0.580	-0.445	0.960	0.017		
		0.590	-0.442				
		0.600	-0.391				
		0.640	-0.261				
		0.700	-0.314				
		0.750	0.001**				
		0.820	-0.421				
		0.870	-0.362				
		0.930	-0.143				
		0.960	-0.051				
			Lower Surface				
0.020	0.025	0.020	0.339	0.020	0.334	0.020	0.590
0.110	-0.007	0.060	0.264	0.060	0.322	0.060	1.108
0.230	0.113	0.090	0.160	0.090	1.127	0.110	0.185
0.400	0.020	0.120	0.144	0.120	-0.039	0.250	0.028
0.490	-0.008	0.200	0.123	0.200	0.053	0.400	0.005
0.630	1.791**	0.260	0.045	0.250	0.090	0.490	-0.063
0.750	0.014	0.400	0.045	0.400	0.034	0.580	-0.036
0.850	0.068	0.490	0.020	0.490	-0.007	0.650	0.090
0.900	0.141	0.580	0.034	0.580	0.034	0.750	0.289
0.960	0.089	0.640	0.201	0.650	-0.014	0.830	0.434
		0.750	0.199	0.750	0.028	0.900	0.470
		0.870	0.237	0.890	0.419	0.960	0.332
		0.930	0.154	0.930	0.351		
		0.960	0.104	0.960	-1.894**		
CN =	0.554		0.837		‡‡‡‡		0.986

Table J-2. Continued.

Flight 220, Wing sweep = 26°, Time = 9-43-20-000, MINF = 0.805, Camber = 4/-1, ALPT = 10.12, BETA = -0.56, QINF = 311.3, RNPU = 2.5E+06

η = 0.93		0.76		0.59		0.40	
			Upper Surface				
x/c	CP	*x/c*	CP	*x/c*	CP	*x/c*	CP
0.020	-0.900	0.000	0.724	0.000	0.853**	0.010	-1.214
0.060	-0.861	0.020	-1.095	0.020	-1.038	0.020	-1.257
0.110	-0.841	0.040	-0.851	0.060	-3.208**	0.060	-1.270
0.200	-1.041	0.060	-1.006	0.090	-1.131	0.110	-1.400
0.230	-0.983	0.090	-1.048	0.110	-1.180	0.140	-1.516
0.400	-0.985	0.130	-1.129	0.130	-1.198	0.190	-2.202**
0.490	-0.268	0.150	-1.218	0.150	-1.318	0.250	-1.475
0.590	-0.235	0.200	-1.245	0.210	-1.251	0.400	-1.065
0.630	-0.260	0.250	-1.255	0.250	-1.305	0.490	-0.888
0.700	-0.150	0.260	-1.235	0.340	-1.319	0.580	-0.671
0.750	-0.205	0.280	-1.240	0.370	-1.318	0.650	-0.410
0.810	-0.189	0.290	-1.226	0.400	-1.325	0.700	-0.401
0.840	-0.183	0.310	-1.242	0.410	-1.825**	0.750	-0.412
0.900	-0.211	0.320	-1.241	0.430	-1.290	0.800	-0.399
0.960	-0.140	0.340	-1.200	0.440	-1.251	0.830	-0.335
		0.350	-0.523**	0.460	-1.018	0.900	-0.172
		0.370	-1.226	0.490	-0.750	0.960	-0.086
		0.380	-1.292	0.500	-0.741		
		0.400	-1.167	0.520	-0.702		
		0.410	-1.136	0.540	-0.680		
		0.430	-0.938	0.550	-0.678		
		0.440	-0.908	0.580	-0.643		
		0.460	-0.767	0.600	-0.597		
		0.470	-0.684	0.610	-0.573		
		0.490	-0.688	0.650	0.464		
		0.500	-0.676	0.700	-0.582		
		0.520	-0.677	0.750	-0.568		
		0.530	-0.636	0.820	-0.386		
		0.550	-0.678	0.890	-0.296		
		0.560	-0.583	0.900	-0.306		
		0.580	-0.599	0.960	-0.222		
		0.590	-0.583				
		0.600	-0.551				
		0.640	-0.386				
		0.700	-0.348				
		0.750	-0.055**				
		0.820	-0.267				
		0.870	-0.287				
		0.930	-0.229				
		0.960	-0.207				
			Lower Surface				
0.020	0.038	0.020	0.393	0.020	0.370	0.020	0.604
0.110	0.018	0.060	0.308	0.060	0.344	0.060	1.101
0.230	0.134	0.090	0.209	0.090	1.106	0.110	0.207
0.400	-0.006	0.120	0.191	0.120	0.009	0.250	0.067
0.490	-0.062	0.200	0.153	0.200	0.070	0.400	0.028
0.630	1.767**	0.260	0.079	0.250	0.134	0.490	-0.035
0.750	-0.098	0.400	0.062	0.400	0.061	0.580	0.001
0.850	-0.040	0.490	0.019	0.490	-0.043	0.650	0.120
0.900	0.021	0.580	0.000	0.580	0.033	0.750	0.300
0.960	0.029	0.640	0.163	0.650	-0.067	0.830	0.429
		0.750	0.093	0.750	0.013	0.900	0.484
		0.870	0.083	0.890	0.388	0.960	0.330
		0.930	0.046	0.930	0.305		
		0.960	-0.014	0.960	-1.980**		
CN =	0.504		0.820		‡‡‡‡		1.050

Table J-2. Continued.

Flight 220, Wing sweep = 26°, Time = 9-43-21-000, MINF = 0.804, Camber = 5/-1, ALPT = 11.12, BETA = -0.59, QINF = 312.7, RNPU = 2.6E+06

η = 0.93		0.76		0.59		0.40	
			Upper Surface				
x/c	CP	*x/c*	CP	*x/c*	CP	*x/c*	CP
0.020	-0.961	0.000	0.697	0.000	0.888**	0.010	-1.291
0.060	-0.926	0.020	-1.188	0.020	-1.083	0.020	-1.329
0.110	-0.983	0.040	-0.918	0.060	-3.234**	0.060	-1.347
0.200	-1.087	0.060	-1.064	0.090	-1.183	0.110	-1.438
0.230	-0.967	0.090	-1.128	0.110	-1.262	0.140	-1.565
0.400	-0.565	0.130	-1.196	0.130	-1.274	0.190	-2.209**
0.490	-0.202	0.150	-1.296	0.150	-1.306	0.250	-1.168
0.590	-0.266	0.200	-1.309	0.210	-0.945	0.400	-0.943
0.630	-0.269	0.250	-1.310	0.250	-0.852	0.490	-0.769
0.700	-0.162	0.260	-1.282	0.340	-0.760	0.580	-0.626
0.750	-0.199	0.280	-1.289	0.370	-0.759	0.650	-0.537
0.810	-0.238	0.290	-1.275	0.400	-0.740	0.700	-0.516
0.840	-0.199	0.310	-1.303	0.410	-1.833**	0.750	-0.520
0.900	-0.205	0.320	-1.301	0.430	-0.725	0.800	-0.433
0.960	-0.141	0.340	-1.190	0.440	-0.670	0.830	-0.406
		0.350	-0.442**	0.460	-0.678	0.900	-0.294
		0.370	-0.959	0.490	-0.626	0.960	-0.221
		0.380	-0.912	0.500	-0.658		
		0.400	-0.750	0.520	-0.606		
		0.410	-0.742	0.540	-0.625		
		0.430	-0.633	0.550	-0.651		
		0.440	-0.563	0.580	-0.653		
		0.460	-0.558	0.600	-0.585		
		0.470	-0.457	0.610	-0.545		
		0.490	-0.453	0.650	0.469		
		0.500	-0.384	0.700	-0.585		
		0.520	-0.402	0.750	-0.564		
		0.530	-0.302	0.820	-0.425		
		0.550	-0.332	0.890	-0.352		
		0.560	-0.285	0.900	-0.389		
		0.580	-0.284	0.960	-0.273		
		0.590	-0.318				
		0.600	-0.320				
		0.640	-0.385				
		0.700	-0.384				
		0.750	-0.060**				
		0.820	-0.211				
		0.870	-0.120				
		0.930	-0.212				
		0.960	-0.198				
			Lower Surface				
0.020	0.089	0.020	0.480	0.020	0.447	0.020	0.660
0.110	0.060	0.060	0.355	0.060	0.411	0.060	1.094
0.230	0.160	0.090	0.256	0.090	1.085	0.110	0.277
0.400	0.013	0.120	0.223	0.120	0.057	0.250	0.122
0.490	-0.032	0.200	0.167	0.200	0.101	0.400	0.068
0.630	1.742**	0.260	0.111	0.250	0.163	0.490	-0.001
0.750	-0.085	0.400	0.074	0.400	0.077	0.580	-0.001
0.850	-0.024	0.490	0.024	0.490	-0.045	0.650	0.118
0.900	0.036	0.580	0.016	0.580	0.052	0.750	0.311
0.960	0.041	0.640	0.175	0.650	-0.064	0.830	0.435
		0.750	0.087	0.750	0.025	0.900	0.468
		0.870	0.095	0.890	0.384	0.960	0.281
		0.930	0.058	0.930	0.295		
		0.960	-0.002	0.960	-1.987**		
CN =	0.485		0.766		‡‡‡‡		1.048

Table J-2. Continued.

Flight 220, Wing sweep = 26°, Time = 9-43-22-500, MINF = 0.799, Camber = 6/-1, ALPT = 13.15, BETA = -0.56, QINF = 313.5, RNPU = 2.6E+06

η = 0.93		0.76		0.59		0.40	
			Upper Surface				
x/c	CP	*x/c*	CP	*x/c*	CP	*x/c*	CP
0.020	-1.137	0.000	0.564	0.000	0.754**	0.010	-1.411
0.060	-1.116	0.020	-1.442	0.020	-1.274	0.020	-1.449
0.110	-1.282	0.040	-1.153	0.060	-3.318**	0.060	-1.467
0.200	-1.040	0.060	-1.257	0.090	-1.104	0.110	-1.569
0.230	-0.897	0.090	-1.261	0.110	-0.947	0.140	-1.122
0.400	-0.345	0.130	-1.175	0.130	-0.822	0.190	-2.235**
0.490	-0.261	0.150	-0.983	0.150	-0.864	0.250	-1.081
0.590	-0.305	0.200	-0.897	0.210	-0.796	0.400	-0.958
0.630	-0.268	0.250	-0.752	0.250	-0.750	0.490	-0.870
0.700	-0.180	0.260	-0.656	0.340	-0.704	0.580	-0.788
0.750	-0.225	0.280	-0.660	0.370	-0.701	0.650	-0.675
0.810	-0.262	0.290	-0.654	0.400	-0.700	0.700	-0.671
0.840	-0.238	0.310	-0.646	0.410	-1.889**	0.750	-0.623
0.900	-0.201	0.320	-0.657	0.430	-0.698	0.800	-0.522
0.960	-0.199	0.340	-0.559	0.440	-0.642	0.830	-0.530
		0.350	-0.247**	0.460	-0.659	0.900	-0.474
		0.370	-0.572	0.490	-0.592	0.960	-0.433
		0.380	-0.611	0.500	-0.660		
		0.400	-0.545	0.520	-0.641		
		0.410	-0.562	0.540	-0.602		
		0.430	-0.591	0.550	-0.630		
		0.440	-0.503	0.580	-0.655		
		0.460	-0.594	0.600	-0.587		
		0.470	-0.510	0.610	-0.549		
		0.490	-0.497	0.650	0.412		
		0.500	-0.502	0.700	-0.573		
		0.520	-0.494	0.750	-0.665		
		0.530	-0.441	0.820	-0.520		
		0.550	-0.500	0.890	-0.470		
		0.560	-0.395	0.900	-0.442		
		0.580	-0.446	0.960	-0.364		
		0.590	-0.414				
		0.600	-0.412				
		0.640	-0.299				
		0.700	-0.289				
		0.750	-0.061**				
		0.820	-0.167				
		0.870	-0.207				
		0.930	-0.187				
		0.960	-0.212				
			Lower Surface				
0.020	0.227	0.020	0.626	0.020	0.577	0.020	0.769
0.110	0.138	0.060	0.476	0.060	0.539	0.060	1.073
0.230	0.188	0.090	0.358	0.090	1.050	0.110	0.374
0.400	0.055	0.120	0.317	0.120	0.159	0.250	0.219
0.490	-0.008	0.200	0.191	0.200	0.129	0.400	0.133
0.630	1.706**	0.260	0.203	0.250	0.268	0.490	0.059
0.750	-0.104	0.400	0.153	0.400	0.149	0.580	0.057
0.850	-0.065	0.490	0.082	0.490	-0.028	0.650	0.178
0.900	-0.012	0.580	0.067	0.580	0.107	0.750	0.337
0.960	-0.018	0.640	0.199	0.650	-0.075	0.830	0.462
		0.750	0.071	0.750	0.024	0.900	0.497
		0.870	0.130	0.890	0.407	0.960	0.287
		0.930	0.040	0.930	0.297		
		0.960	-0.037	0.960	-2.014**		
CN =	0.504		0.704		‡‡‡‡		1.149

Table J-2. Continued.

Flight 220, Wing sweep = 26°, Time = 9-43-25-000, MINF = 0.794, Camber = 7/-1, ALPT = 13.18, BETA = 2.31, QINF = 319.4, RNPU = 2.6E+06

η = 0.93		0.76		0.59		0.40	
			Upper Surface				
x/c	CP	*x/c*	CP	*x/c*	CP	*x/c*	CP
0.020	-0.933	0.000	0.733	0.000	0.982**	0.010	-1.216
0.060	-0.873	0.020	-1.155	0.020	-1.105	0.020	-1.313
0.110	-0.976	0.040	-0.894	0.060	-3.224**	0.060	-1.409
0.200	-1.284	0.060	-1.063	0.090	-1.268	0.110	-1.566
0.230	-1.286	0.090	-1.202	0.110	-1.310	0.140	-1.391
0.400	-0.665	0.130	-1.308	0.130	-0.895	0.190	-2.265**
0.490	-0.503	0.150	-1.443	0.150	-0.987	0.250	-1.236
0.590	-0.411	0.200	-1.492	0.210	-0.804	0.400	-1.026
0.630	-0.356	0.250	-1.299	0.250	-0.759	0.490	-0.895
0.700	-0.257	0.260	-1.342	0.340	-0.750	0.580	-0.762
0.750	-0.271	0.280	-1.164	0.370	-0.720	0.650	-0.670
0.810	-0.279	0.290	-1.091	0.400	-0.731	0.700	-0.648
0.840	-0.264	0.310	-1.091	0.410	-1.925**	0.750	-0.617
0.900	-0.247	0.320	-1.037	0.430	-0.701	0.800	-0.659
0.960	-0.224	0.340	-1.055	0.440	-0.657	0.830	-0.543
		0.350	-0.450**	0.460	-0.661	0.900	-0.466
		0.370	-0.910	0.490	-0.626	0.960	-0.429
		0.380	-0.936	0.500	-0.627		
		0.400	-0.788	0.520	-0.602		
		0.410	-0.846	0.540	-0.604		
		0.430	-0.666	0.550	-0.618		
		0.440	-0.686	0.580	-0.615		
		0.460	-0.639	0.600	-0.565		
		0.470	-0.543	0.610	-0.551		
		0.490	-0.480	0.650	0.413		
		0.500	-0.363	0.700	-0.492		
		0.520	-0.458	0.750	-0.610		
		0.530	-0.251	0.820	-0.502		
		0.550	-0.283	0.890	-0.449		
		0.560	-0.219	0.900	-0.413		
		0.580	-0.226	0.960	-0.388		
		0.590	-0.245				
		0.600	-0.259				
		0.640	-0.276				
		0.700	-0.313				
		0.750	-0.055**				
		0.820	-0.145				
		0.870	-0.319				
		0.930	-0.294				
		0.960	-0.289				
			Lower Surface				
0.020	0.268	0.020	0.692	0.020	0.592	0.020	0.761
0.110	0.197	0.060	0.514	0.060	0.578	0.060	1.065
0.230	0.179	0.090	0.412	0.090	0.959	0.110	0.383
0.400	0.105	0.120	0.378	0.120	0.216	0.250	0.264
0.490	0.032	0.200	0.182	0.200	0.126	0.400	0.205
0.630	1.603**	0.260	0.272	0.250	0.337	0.490	0.136
0.750	-0.101	0.400	0.222	0.400	0.214	0.580	0.157
0.850	-0.070	0.490	0.147	0.490	-0.002	0.650	0.305
0.900	-0.021	0.580	0.150	0.580	0.195	0.750	0.491
0.960	-0.034	0.640	0.303	0.650	-0.068	0.830	0.596
		0.750	0.155	0.750	0.032	0.900	0.641
		0.870	0.178	0.890	0.534	0.960	0.396
		0.930	0.113	0.930	0.422		
		0.960	0.010	0.960	-1.880**		
CN =	0.633		0.880		‡‡‡‡		1.273

Table J-2. Continued.

Flight 220, Wing sweep = 26°, Time = 9-43-28-000, MINF = 0.810, Camber = 3/6, ALPT = 6.18, BETA = -0.56, QINF = 348.7, RNPU = 2.8E+06

η = 0.93		0.76		0.59		0.40	
			Upper Surface				
x/c	CP	*x/c*	CP	*x/c*	CP	*x/c*	CP
0.020	-0.174	0.000	0.877	0.000	1.015**	0.010	-0.928
0.060	-0.326	0.020	-0.515	0.020	-0.482	0.020	-0.874
0.110	-0.449	0.040	-0.373	0.060	-2.649**	0.060	-0.883
0.200	-0.750	0.060	-0.652	0.090	-0.778	0.110	-0.973
0.230	-0.680	0.090	-0.667	0.110	-0.821	0.140	-1.117
0.400	-0.246	0.130	-0.710	0.130	-0.824	0.190	-2.175**
0.490	-0.229	0.150	-0.794	0.150	-0.922	0.250	-1.058
0.590	-0.308	0.200	-0.783	0.210	-0.883	0.400	-0.377
0.630	-0.334	0.250	-0.884	0.250	-0.911	0.490	-0.374
0.700	-0.312	0.260	-0.852	0.340	-0.906	0.580	-0.377
0.750	-0.731	0.280	-0.860	0.370	-0.469	0.650	-0.429
0.810	-0.686	0.290	-0.853	0.400	-0.338	0.700	-0.426
0.840	-0.661	0.310	-0.849	0.410	-1.864**	0.750	-0.526
0.900	-0.201	0.320	-0.850	0.430	-0.305	0.800	-0.692
0.960	-0.095	0.340	-0.814	0.440	-0.280	0.830	-0.891
		0.350	-0.291**	0.460	-0.288	0.900	-0.121
		0.370	-0.301	0.490	-0.254	0.960	-0.049
		0.380	-0.270	0.500	-0.312		
		0.400	-0.158	0.520	-0.287		
		0.410	-0.226	0.540	-0.296		
		0.430	-0.204	0.550	-0.304		
		0.440	-0.178	0.580	-0.332		
		0.460	-0.249	0.600	-0.324		
		0.470	-0.236	0.610	-0.343		
		0.490	-0.246	0.650	0.305		
		0.500	-0.283	0.700	-0.595		
		0.520	-0.291	0.750	-0.596		
		0.530	-0.284	0.820	-0.802		
		0.550	-0.333	0.890	-0.123		
		0.560	-0.313	0.900	-0.097		
		0.580	-0.316	0.960	-0.007		
		0.590	-0.361				
		0.600	-0.371				
		0.640	-0.576				
		0.700	-0.487				
		0.750	0.007**				
		0.820	-0.400				
		0.870	-0.429				
		0.930	-0.255				
		0.960	-0.184				
			Lower Surface				
0.020	-0.213	0.020	0.105	0.020	0.036	0.020	0.345
0.110	-0.121	0.060	0.059	0.060	0.166	0.060	0.977
0.230	0.029	0.090	0.015	0.090	0.779	0.110	0.018
0.400	0.020	0.120	0.008	0.120	-0.196	0.250	-0.103
0.490	0.018	0.200	-0.011	0.200	-0.023	0.400	-0.106
0.630	1.369**	0.260	-0.047	0.250	-0.037	0.490	-0.165
0.750	0.115	0.400	-0.012	0.400	-0.045	0.580	-0.129
0.850	0.192	0.490	-0.025	0.490	-0.001	0.650	0.028
0.900	0.286	0.580	0.001	0.580	-0.032	0.750	0.258
0.960	0.198	0.640	0.205	0.650	-0.013	0.830	0.408
		0.750	0.290	0.750	0.022	0.900	0.452
		0.870	0.350	0.890	0.391	0.960	0.316
		0.930	0.295	0.930	0.330		
		0.960	0.215	0.960	-1.655**		
CN =	0.448		0.579		‡‡‡‡		0.703

Table J-2. Continued.

Flight 221, Wing sweep = 26°, Time = 13-15-18-000, MINF = 0.859, Camber = 5/10, ALPT = 3.98, BETA = 0.22, QINF = 303.4, RNPU = 2.4E+06, CNWP = 0.3052

η = 0.93		0.76		0.59		0.40	
			Upper Surface				
x/c	CP	*x/c*	CP	*x/c*	CP	*x/c*	CP
0.020	0.347	0.000	0.583	0.000	3.469**	0.010	-0.032
0.060	-0.023	0.020	0.212	0.020	0.246	0.020	0.006
0.110	-0.274	0.040	0.124	0.060	-3.910**	0.060	-0.379
0.200	-0.694	0.060	-0.111	0.090	-0.245	0.110	-0.518
0.230	-0.546	0.090	-0.247	0.110	-0.428	0.140	-0.810
0.400	-0.154	0.130	-0.422	0.130	-0.569	0.190	-1.935**
0.490	-0.185	0.150	-0.608	0.150	-0.723	0.250	-0.593
0.590	-0.275	0.200	-0.645	0.210	-0.677	0.400	-0.329
0.630	-0.286	0.250	-0.700	0.250	-0.688	0.490	-0.286
0.700	-0.378	0.260	-0.671	0.340	-0.674	0.580	-0.308
0.750	-0.649	0.280	-0.664	0.370	-0.349	0.650	-0.377
0.810	-0.624	0.290	-0.651	0.400	-0.291	0.700	-0.352
0.840	-0.589	0.310	-0.654	0.410	2.528**	0.750	-0.474
0.900	-0.270	0.320	-0.673	0.430	-0.296	0.800	-1.015
0.960	-0.289	0.340	-0.615	0.440	-0.256	0.830	-0.608
		0.350	-0.317**	0.460	-0.280	0.900	-0.399
		0.370	-0.297	0.490	-0.208	0.960	-0.396
		0.380	-0.248	0.500	-0.304		
		0.400	-0.136	0.520	-0.266		
		0.410	-0.203	0.540	-0.252		
		0.430	-0.185	0.550	-0.229		
		0.440	-0.187	0.580	-0.213		
		0.460	-0.200	0.600	-0.259		
		0.470	-0.208	0.610	-0.293		
		0.490	-0.217	0.650	2.115**		
		0.500	-0.237	0.700	-0.526		
		0.520	-0.293	0.750	-0.551		
		0.530	-0.247	0.820	-0.859		
		0.550	-0.313	0.890	-0.375		
		0.560	-0.263	0.900	-0.451		
		0.580	-0.285	0.960	-0.365		
		0.590	-0.303				
		0.600	-0.315				
		0.640	-0.493				
		0.700	-0.482				
		0.750	-0.005**				
		0.820	-0.539				
		0.870	-0.332				
		0.930	-0.298				
		0.960	-0.297				
			Lower Surface				
0.020	-1.353	0.020	-1.186	0.020	-0.994	0.020	-0.193
0.110	-0.146	0.060	-0.378	0.060	-0.114	0.060	1.110**
0.230	-0.050	0.090	-0.192	0.090	1.998**	0.110	-0.109
0.400	0.015	0.120	-0.112	0.120	-0.304	0.250	-0.229
0.490	0.052	0.200	-0.057	0.200	-0.073	0.400	-0.206
0.630	2.835**	0.260	-0.088	0.250	-0.141	0.490	-0.210
0.750	0.154	0.400	-0.041	0.400	-0.101	0.580	-0.129
0.850	0.239	0.490	-0.014	0.490	-0.021	0.650	0.119
0.900	0.301	0.580	0.053	0.580	0.022	0.750	0.296
0.960	0.129	0.640	0.264	0.650	-0.042	0.830	0.461
		0.750	0.347	0.750	-0.021	0.900	0.502
		0.870	0.410	0.890	0.415	0.960	0.352
		0.930	0.287	0.930	0.338		
		0.960	0.183	0.960	-2.073**		
CN =	0.380		0.452		0.433		0.462

Table J-2. Continued.

Flight 221, Wing sweep = 26°, Time = 13-15-22-500, MINF = 0.864, Camber = 5/10, ALPT = 5.10, BETA = 0.14, QINF = 307.9, RNPU = 2.4E+06, CNWP = 0.3560

η = 0.93		0.76		0.59		0.40	
			Upper Surface				
x/c	CP	*x/c*	CP	*x/c*	CP	*x/c*	CP
0.020	0.271	0.000	0.667	0.000	3.411**	0.010	-0.101
0.060	-0.053	0.020	0.109	0.020	0.118	0.020	-0.109
0.110	-0.301	0.040	0.028	0.060	-3.862**	0.060	-0.504
0.200	-0.729	0.060	-0.208	0.090	-0.331	0.110	-0.662
0.230	-0.604	0.090	-0.296	0.110	-0.483	0.140	-0.861
0.400	-0.358	0.130	-0.482	0.130	-0.612	0.190	-1.915**
0.490	-0.140	0.150	-0.654	0.150	-0.763	0.250	-0.798
0.590	-0.238	0.200	-0.699	0.210	-0.739	0.400	-0.632
0.630	-0.268	0.250	-0.755	0.250	-0.771	0.490	-0.382
0.700	-0.274	0.260	-0.755	0.340	-0.804	0.580	-0.373
0.750	-0.898	0.280	-0.733	0.370	-0.766	0.650	-0.444
0.810	-0.853	0.290	-0.724	0.400	-0.770	0.700	-0.415
0.840	-0.870	0.310	-0.749	0.410	2.483**	0.750	-0.532
0.900	-0.309	0.320	-0.749	0.430	-0.783	0.800	-0.736
0.960	-0.314	0.340	-0.703	0.440	-0.763	0.830	-0.471
		0.350	-0.373**	0.460	-0.764	0.900	-0.352
		0.370	-0.721	0.490	-0.529	0.960	-0.375
		0.380	-0.753	0.500	-0.444		
		0.400	-0.655	0.520	-0.402		
		0.410	-0.720	0.540	-0.363		
		0.430	-0.683	0.550	-0.309		
		0.440	-0.702	0.580	-0.287		
		0.460	-0.726	0.600	-0.322		
		0.470	-0.661	0.610	-0.337		
		0.490	-0.715	0.650	2.076**		
		0.500	-0.730	0.700	-0.523		
		0.520	-0.780	0.750	-0.530		
		0.530	-0.684	0.820	-0.753		
		0.550	-0.476	0.890	-0.315		
		0.560	-0.268	0.900	-0.366		
		0.580	-0.171	0.960	-0.313		
		0.590	-0.199				
		0.600	-0.180				
		0.640	-0.278				
		0.700	-0.315				
		0.750	-0.009**				
		0.820	-0.517				
		0.870	-0.442				
		0.930	-0.288				
		0.960	-0.279				
			Lower Surface				
0.020	-1.128	0.020	-0.935	0.020	-0.716	0.020	0.052
0.110	-0.165	0.060	-0.129	0.060	0.007	0.060	1.100**
0.230	-0.028	0.090	-0.130	0.090	1.960**	0.110	-0.067
0.400	-0.034	0.120	-0.083	0.120	-0.233	0.250	-0.167
0.490	0.051	0.200	-0.015	0.200	-0.047	0.400	-0.162
0.630	2.786**	0.260	-0.060	0.250	-0.098	0.490	-0.164
0.750	0.170	0.400	-0.026	0.400	-0.079	0.580	-0.111
0.850	0.231	0.490	-0.011	0.490	-0.007	0.650	0.116
0.900	0.302	0.580	0.055	0.580	0.021	0.750	0.302
0.960	0.135	0.640	0.281	0.650	-0.028	0.830	0.467
		0.750	0.341	0.750	-0.029	0.900	0.507
		0.870	0.405	0.890	0.436	0.960	0.348
		0.930	0.318	0.930	0.354		
		0.960	0.194	0.960	-2.051**		
CN =	0.447		0.568		0.543		0.576

Table J-2. Continued.

Flight 221, Wing sweep = 26°, Time = 13-15-29-500, MINF = 0.864, Camber = 5/10, ALPT = 6.05, BETA = 0.19, QINF = 309.6, RNPU = 2.4E+06, CNWP = 0.3875

η = 0.93		0.76		0.59		0.40	
			Upper Surface				
x/c	CP	*x/c*	CP	*x/c*	CP	*x/c*	CP
0.020	0.192	0.000	0.735	0.000	1.027**	0.010	-0.306
0.060	-0.124	0.020	0.041	0.020	0.023	0.020	-0.288
0.110	-0.415	0.040	-0.043	0.060	-2.657**	0.060	-0.656
0.200	-0.753	0.060	-0.260	0.090	-0.453	0.110	-0.813
0.230	-0.697	0.090	-0.357	0.110	-0.509	0.140	-1.002
0.400	-0.596	0.130	-0.536	0.130	-0.648	0.190	-1.912**
0.490	-0.471	0.150	-0.695	0.150	-0.801	0.250	-0.978
0.590	-0.349	0.200	-0.738	0.210	-0.773	0.400	-0.716
0.630	-0.300	0.250	-0.808	0.250	-0.837	0.490	-0.510
0.700	-0.353	0.260	-0.804	0.340	-0.851	0.580	-0.455
0.750	-0.882	0.280	-0.796	0.370	-0.845	0.650	-0.465
0.810	-0.856	0.290	-0.787	0.400	-0.873	0.700	-0.466
0.840	-0.873	0.310	-0.800	0.410	2.462**	0.750	-0.571
0.900	-0.346	0.320	-0.803	0.430	-0.859	0.800	-0.591
0.960	-0.360	0.340	-0.772	0.440	-0.832	0.830	-0.452
		0.350	-0.379**	0.460	-0.852	0.900	-0.358
		0.370	-0.778	0.490	-0.833	0.960	-0.358
		0.380	-0.822	0.500	-0.881		
		0.400	-0.740	0.520	-0.850		
		0.410	-0.794	0.540	-0.841		
		0.430	-0.740	0.550	-0.814		
		0.440	-0.753	0.580	-0.651		
		0.460	-0.785	0.600	-0.523		
		0.470	-0.770	0.610	-0.472		
		0.490	-0.785	0.650	0.425**		
		0.500	-0.804	0.700	-0.616		
		0.520	-0.792	0.750	-0.616		
		0.530	-0.780	0.820	-0.426		
		0.550	-0.818	0.890	-0.291		
		0.560	-0.763	0.900	-0.341		
		0.580	-0.783	0.960	-0.267		
		0.590	-0.823				
		0.600	-0.810				
		0.640	-0.838				
		0.700	-0.824				
		0.750	-0.003**				
		0.820	-0.362				
		0.870	-0.231				
		0.930	-0.233				
		0.960	-0.239				
			Lower Surface				
0.020	-0.598	0.020	-0.310	0.020	-0.222	0.020	0.156
0.110	-0.164	0.060	-0.034	0.060	0.052	0.060	1.080**
0.230	-0.003	0.090	-0.066	0.090	1.942**	0.110	-0.020
0.400	0.013	0.120	-0.040	0.120	-0.188	0.250	-0.137
0.490	0.036	0.200	-0.004	0.200	-0.027	0.400	-0.147
0.630	2.763**	0.260	-0.046	0.250	-0.076	0.490	-0.171
0.750	0.175	0.400	-0.005	0.400	-0.043	0.580	-0.089
0.850	0.240	0.490	0.017	0.490	-0.008	0.650	0.108
0.900	0.304	0.580	0.069	0.580	0.013	0.750	0.316
0.960	0.125	0.640	0.283	0.650	-0.021	0.830	0.455
		0.750	0.338	0.750	-0.022	0.900	0.500
		0.870	0.414	0.890	0.451	0.960	0.333
		0.930	0.340	0.930	0.366		
		0.960	0.217	0.960	-1.907**		
CN =	0.563		0.709		0.635		0.669

Table J-2. Continued.

Flight 221, Wing sweep = 26°, Time = 13-15-34-000, MINF = 0.861, Camber = 5/10, ALPT = 7.05, BETA = 0.31, QINF = 308.5, RNPU = 2.4E+06, CNWP = 0.4677

η = 0.93		0.76		0.59		0.40	
			Upper Surface				
x/c	CP	*x/c*	CP	*x/c*	CP	*x/c*	CP
0.020	0.085	0.000	0.803	0.000	1.026**	0.010	-0.716
0.060	-0.198	0.020	-0.171	0.020	-0.115	0.020	-0.473
0.110	-0.397	0.040	-0.155	0.060	-2.711**	0.060	-0.732
0.200	-0.799	0.060	-0.373	0.090	-0.564	0.110	-0.922
0.230	-0.782	0.090	-0.440	0.110	-0.634	0.140	-1.102
0.400	-0.700	0.130	-0.599	0.130	-0.734	0.190	-1.925**
0.490	-0.564	0.150	-0.752	0.150	-0.875	0.250	-1.070
0.590	-0.536	0.200	-0.787	0.210	-0.849	0.400	-0.771
0.630	-0.390	0.250	-0.852	0.250	-0.906	0.490	-0.668
0.700	-0.390	0.260	-0.864	0.340	-0.919	0.580	-0.550
0.750	-0.771	0.280	-0.867	0.370	-0.908	0.650	-0.552
0.810	-0.781	0.290	-0.850	0.400	-0.933	0.700	-0.550
0.840	-0.832	0.310	-0.863	0.410	2.465**	0.750	-0.650
0.900	-0.430	0.320	-0.871	0.430	-0.927	0.800	-0.558
0.960	-0.429	0.340	-0.840	0.440	-0.906	0.830	-0.419
		0.350	-0.383**	0.460	-0.925	0.900	-0.351
		0.370	-0.840	0.490	-0.872	0.960	-0.351
		0.380	-0.888	0.500	-0.950		
		0.400	-0.809	0.520	-0.943		
		0.410	-0.860	0.540	-0.929		
		0.430	-0.822	0.550	-0.964		
		0.440	-0.830	0.580	-0.952		
		0.460	-0.860	0.600	-0.879		
		0.470	-0.827	0.610	-0.843		
		0.490	-0.860	0.650	0.247**		
		0.500	-0.862	0.700	-0.738		
		0.520	-0.870	0.750	-0.740		
		0.530	-0.853	0.820	-0.342		
		0.550	-0.893	0.890	-0.280		
		0.560	-0.842	0.900	-0.313		
		0.580	-0.856	0.960	-0.250		
		0.590	-0.908				
		0.600	-0.919				
		0.640	-0.909				
		0.700	-0.453				
		0.750	0.009**				
		0.820	-0.264				
		0.870	-0.259				
		0.930	-0.272				
		0.960	-0.275				
			Lower Surface				
0.020	-0.421	0.020	-0.183	0.020	-0.078	0.020	0.239
0.110	-0.124	0.060	0.047	0.060	0.118	0.060	1.092**
0.230	0.035	0.090	0.005	0.090	1.943**	0.110	0.047
0.400	0.021	0.120	0.010	0.120	-0.114	0.250	-0.085
0.490	0.044	0.200	0.039	0.200	0.007	0.400	-0.104
0.630	2.767**	0.260	-0.010	0.250	-0.019	0.490	-0.134
0.750	0.162	0.400	0.014	0.400	-0.016	0.580	-0.067
0.850	0.245	0.490	0.015	0.490	0.001	0.650	0.124
0.900	0.298	0.580	0.070	0.580	0.028	0.750	0.340
0.960	0.130	0.640	0.281	0.650	-0.006	0.830	0.473
		0.750	0.340	0.750	0.001	0.900	0.510
		0.870	0.410	0.890	0.457	0.960	0.336
		0.930	0.314	0.930	0.368		
		0.960	0.209	0.960	-1.906**		
CN =	0.627		0.734		0.742		0.773

Table J-2. Continued.

Flight 221, Wing sweep = 26°, Time = 13-15-37-500, MINF = 0.858, Camber = 5/10, ALPT = 8.16, BETA = 0.02, QINF = 307.9, RNPU = 2.4E+06, CNWP = 0.5349

η = 0.93		0.76		0.59		0.40	
			Upper Surface				
x/c	CP	*x/c*	CP	*x/c*	CP	*x/c*	CP
0.020	-0.083	0.000	0.854	0.000	0.916**	0.010	-0.781
0.060	-0.336	0.020	-0.283	0.020	-0.300	0.020	-0.741
0.110	-0.414	0.040	-0.262	0.060	-2.896**	0.060	-0.832
0.200	-0.814	0.060	-0.522	0.090	-0.694	0.110	-1.016
0.230	-0.801	0.090	-0.607	0.110	-0.750	0.140	-1.121
0.400	-0.778	0.130	-0.709	0.130	-0.821	0.190	-1.940**
0.490	-0.640	0.150	-0.827	0.150	-0.966	0.250	-1.179
0.590	-0.624	0.200	-0.854	0.210	-0.928	0.400	-0.843
0.630	-0.478	0.250	-0.937	0.250	-0.985	0.490	-0.725
0.700	-0.502	0.260	-0.921	0.340	-1.006	0.580	-0.635
0.750	-0.747	0.280	-0.927	0.370	-0.976	0.650	-0.634
0.810	-0.751	0.290	-0.918	0.400	-1.003	0.700	-0.629
0.840	-0.722	0.310	-0.937	0.410	2.459**	0.750	-0.725
0.900	-0.498	0.320	-0.945	0.430	-1.013	0.800	-0.548
0.960	-0.474	0.340	-0.903	0.440	-0.981	0.830	-0.411
		0.350	-0.396**	0.460	-0.990	0.900	-0.355
		0.370	-0.906	0.490	-0.959	0.960	-0.358
		0.380	-0.952	0.500	-1.012		
		0.400	-0.882	0.520	-0.993		
		0.410	-0.926	0.540	-0.992		
		0.430	-0.907	0.550	-1.019		
		0.440	-0.905	0.580	-1.035		
		0.460	-0.937	0.600	-0.957		
		0.470	-0.906	0.610	-0.960		
		0.490	-0.928	0.650	-0.016**		
		0.500	-0.941	0.700	-1.029		
		0.520	-0.929	0.750	-0.658		
		0.530	-0.916	0.820	-0.357		
		0.550	-0.956	0.890	-0.313		
		0.560	-0.898	0.900	-0.368		
		0.580	-0.924	0.960	-0.308		
		0.590	-0.974				
		0.600	-0.971				
		0.640	-0.374				
		0.700	-0.339				
		0.750	0.034**				
		0.820	-0.276				
		0.870	-0.285				
		0.930	-0.283				
		0.960	-0.279				
			Lower Surface				
0.020	-0.255	0.020	0.025	0.020	0.091	0.020	0.378
0.110	-0.067	0.060	0.149	0.060	0.194	0.060	1.112**
0.230	0.086	0.090	0.085	0.090	1.936**	0.110	0.104
0.400	0.043	0.120	0.085	0.120	-0.034	0.250	-0.009
0.490	0.040	0.200	0.089	0.200	0.044	0.400	-0.044
0.630	2.761**	0.260	0.039	0.250	0.042	0.490	-0.080
0.750	0.158	0.400	0.051	0.400	0.007	0.580	-0.044
0.850	0.223	0.490	0.030	0.490	0.004	0.650	0.149
0.900	0.301	0.580	0.092	0.580	0.039	0.750	0.344
0.960	0.124	0.640	0.296	0.650	-0.003	0.830	0.483
		0.750	0.350	0.750	-0.010	0.900	0.526
		0.870	0.420	0.890	0.462	0.960	0.335
		0.930	0.315	0.930	0.379		
		0.960	0.213	0.960	-1.900**		
CN =	0.688		0.783		0.845		0.876

Table J-2. Continued.

Flight 221, Wing sweep = 26°, Time = 13-15-38-000, MINF = 0.857, Camber = 5/9, ALPT = 8.41, BETA = 0.08, QINF = 307.7, RNPU = 2.4E+06, CNWP = 0.5392

η = 0.93		0.76		0.59		0.40	
			Upper Surface				
x/c	CP	*x/c*	CP	*x/c*	CP	*x/c*	CP
0.020	-0.109	0.000	0.861	0.000	0.969**	0.010	-0.783
0.060	-0.357	0.020	-0.340	0.020	-0.348	0.020	-0.804
0.110	-0.540	0.040	-0.285	0.060	-2.809**	0.060	-0.860
0.200	-0.834	0.060	-0.539	0.090	-0.737	0.110	-1.023
0.230	-0.786	0.090	-0.643	0.110	-0.778	0.140	-1.175
0.400	-0.795	0.130	-0.731	0.130	-0.858	0.190	-1.943**
0.490	-0.664	0.150	-0.861	0.150	-0.985	0.250	-1.196
0.590	-0.630	0.200	-0.884	0.210	-0.935	0.400	-0.852
0.630	-0.525	0.250	-0.949	0.250	-1.008	0.490	-0.746
0.700	-0.548	0.260	-0.943	0.340	-1.023	0.580	-0.647
0.750	-0.681	0.280	-0.938	0.370	-0.987	0.650	-0.656
0.810	-0.687	0.290	-0.938	0.400	-1.027	0.700	-0.637
0.840	-0.689	0.310	-0.961	0.410	2.458**	0.750	-0.735
0.900	-0.449	0.320	-0.969	0.430	-1.030	0.800	-0.550
0.960	-0.394	0.340	-0.926	0.440	-1.004	0.830	-0.449
		0.350	-0.383**	0.460	-1.014	0.900	-0.340
		0.370	-0.926	0.490	-0.983	0.960	-0.356
		0.380	-0.972	0.500	-1.037		
		0.400	-0.892	0.520	-1.012		
		0.410	-0.944	0.540	-1.022		
		0.430	-0.927	0.550	-1.046		
		0.440	-0.922	0.580	-1.092		
		0.460	-0.962	0.600	-0.983		
		0.470	-0.914	0.610	-0.988		
		0.490	-0.953	0.650	0.153**		
		0.500	-0.965	0.700	-0.699		
		0.520	-0.947	0.750	-0.596		
		0.530	-0.939	0.820	-0.408		
		0.550	-0.985	0.890	-0.359		
		0.560	-0.919	0.900	-0.412		
		0.580	-0.946	0.960	-0.337		
		0.590	-0.994				
		0.600	-0.959				
		0.640	-0.364				
		0.700	-0.349				
		0.750	0.022**				
		0.820	-0.270				
		0.870	-0.298				
		0.930	-0.289				
		0.960	-0.277				
			Lower Surface				
0.020	-0.220	0.020	0.061	0.020	0.119	0.020	0.410
0.110	-0.057	0.060	0.162	0.060	0.224	0.060	1.111**
0.230	0.095	0.090	0.100	0.090	1.935**	0.110	0.108
0.400	0.055	0.120	0.090	0.120	-0.011	0.250	0.001
0.490	0.031	0.200	0.094	0.200	0.062	0.400	-0.039
0.630	2.761**	0.260	0.048	0.250	0.032	0.490	-0.075
0.750	0.133	0.400	0.052	0.400	0.005	0.580	-0.027
0.850	0.194	0.490	0.042	0.490	0.009	0.650	0.155
0.900	0.270	0.580	0.086	0.580	0.058	0.750	0.352
0.960	0.114	0.640	0.283	0.650	0.003	0.830	0.482
		0.750	0.324	0.750	-0.012	0.900	0.527
		0.870	0.391	0.890	0.463	0.960	0.347
		0.930	0.292	0.930	0.370		
		0.960	0.179	0.960	-1.895**		
CN =	0.684		0.792		0.848		0.898

Table J-2. Continued.

Flight 221, Wing sweep = 26°, Time = 13-15-38-500, MINF = 0.857, Camber = 5/7, ALPT = 8.88, BETA = 0.43, QINF = 307.8, RNPU = 2.4E+06, CNWP = 0.5397

η = 0.93		0.76		0.59		0.40	
			Upper Surface				
x/c	CP	*x/c*	CP	*x/c*	CP	*x/c*	CP
0.020	-0.197	0.000	0.850	0.000	0.979**	0.010	-0.745
0.060	-0.415	0.020	-0.454	0.020	-0.421	0.020	-0.847
0.110	-0.599	0.040	-0.338	0.060	-2.849**	0.060	-0.924
0.200	-0.874	0.060	-0.572	0.090	-0.780	0.110	-1.045
0.230	-0.807	0.090	-0.688	0.110	-0.834	0.140	-1.213
0.400	-0.820	0.130	-0.785	0.130	-0.896	0.190	-1.946**
0.490	-0.706	0.150	-0.899	0.150	-0.996	0.250	-1.226
0.590	-0.693	0.200	-0.925	0.210	-0.974	0.400	-0.882
0.630	-0.577	0.250	-0.977	0.250	-1.039	0.490	-0.767
0.700	-0.213	0.260	-0.972	0.340	-1.041	0.580	-0.711
0.750	-0.601	0.280	-0.975	0.370	-1.028	0.650	-0.679
0.810	-0.616	0.290	-0.975	0.400	-1.052	0.700	-0.670
0.840	-0.634	0.310	-0.992	0.410	2.454**	0.750	-0.752
0.900	-0.425	0.320	-1.002	0.430	-1.048	0.800	-0.553
0.960	-0.300	0.340	-0.962	0.440	-1.026	0.830	-0.434
		0.350	-0.391**	0.460	-1.044	0.900	-0.330
		0.370	-0.961	0.490	-1.015	0.960	-0.331
		0.380	-1.011	0.500	-1.058		
		0.400	-0.905	0.520	-1.047		
		0.410	-0.978	0.540	-1.037		
		0.430	-0.952	0.550	-1.072		
		0.440	-0.957	0.580	-1.112		
		0.460	-1.000	0.600	-1.021		
		0.470	-0.968	0.610	-0.991		
		0.490	-0.987	0.650	0.469**		
		0.500	-1.000	0.700	-0.534		
		0.520	-1.002	0.750	-0.563		
		0.530	-0.983	0.820	-0.444		
		0.550	-1.006	0.890	-0.397		
		0.560	-0.723	0.900	-0.430		
		0.580	-0.604	0.960	-0.344		
		0.590	-0.491				
		0.600	-0.463				
		0.640	-0.341				
		0.700	-0.352				
		0.750	0.011**				
		0.820	-0.299				
		0.870	-0.333				
		0.930	-0.299				
		0.960	-0.313				
			Lower Surface				
0.020	-0.147	0.020	0.126	0.020	0.177	0.020	0.487
0.110	-0.047	0.060	0.210	0.060	0.253	0.060	1.107**
0.230	0.103	0.090	0.125	0.090	1.931**	0.110	0.149
0.400	0.016	0.120	0.115	0.120	0.007	0.250	0.018
0.490	-0.023	0.200	0.105	0.200	0.072	0.400	-0.021
0.630	2.757**	0.260	0.055	0.250	0.072	0.490	-0.064
0.750	0.070	0.400	0.053	0.400	0.036	0.580	-0.025
0.850	0.139	0.490	0.032	0.490	-0.001	0.650	0.155
0.900	0.219	0.580	0.064	0.580	0.055	0.750	0.348
0.960	0.102	0.640	0.258	0.650	-0.007	0.830	0.487
		0.750	0.257	0.750	-0.015	0.900	0.530
		0.870	0.298	0.890	0.464	0.960	0.344
		0.930	0.193	0.930	0.364		
		0.960	0.076	0.960	-1.941**		
CN =	0.643		0.772		0.866		0.933

Table J-2. Continued.

Flight 221, Wing sweep = 26°, Time = 13-15-39-000, MINF = 0.856, Camber = 5/4, ALPT = 9.27, BETA = -0.07, QINF = 307.8, RNPU = 2.4E+06, CNWP = 0.4812

η = 0.93		0.76		0.59		0.40	
			Upper Surface				
x/c	CP	*x/c*	CP	*x/c*	CP	*x/c*	CP
0.020	-0.246	0.000	0.864	0.000	0.963**	0.010	-0.707
0.060	-0.444	0.020	-0.511	0.020	-0.408	0.020	-0.870
0.110	-0.634	0.040	-0.354	0.060	-2.820**	0.060	-0.967
0.200	-0.889	0.060	-0.604	0.090	-0.802	0.110	-1.075
0.230	-0.862	0.090	-0.732	0.110	-0.871	0.140	-1.232
0.400	-0.859	0.130	-0.825	0.130	-0.921	0.190	-1.947**
0.490	-0.743	0.150	-0.932	0.150	-1.055	0.250	-1.242
0.590	-0.497	0.200	-0.960	0.210	-0.998	0.400	-0.904
0.630	-0.231	0.250	-1.004	0.250	-1.058	0.490	-0.796
0.700	-0.204	0.260	-1.000	0.340	-1.072	0.580	-0.713
0.750	-0.440	0.280	-1.010	0.370	-1.037	0.650	-0.700
0.810	-0.458	0.290	-0.993	0.400	-1.075	0.700	-0.692
0.840	-0.469	0.310	-1.028	0.410	2.452**	0.750	-0.732
0.900	-0.405	0.320	-1.034	0.430	-1.079	0.800	-0.541
0.960	-0.205	0.340	-0.990	0.440	-1.048	0.830	-0.409
		0.350	-0.393**	0.460	-1.073	0.900	-0.349
		0.370	-0.991	0.490	-1.047	0.960	-0.337
		0.380	-1.039	0.500	-1.088		
		0.400	-0.960	0.520	-1.065		
		0.410	-1.008	0.540	-1.066		
		0.430	-0.988	0.550	-1.086		
		0.440	-0.986	0.580	-0.789		
		0.460	-1.025	0.600	-0.607		
		0.470	-0.976	0.610	-0.534		
		0.490	-0.973	0.650	0.499**		
		0.500	-0.832	0.700	-0.525		
		0.520	-0.770	0.750	-0.569		
		0.530	-0.555	0.820	-0.467		
		0.550	-0.512	0.890	-0.406		
		0.560	-0.447	0.900	-0.437		
		0.580	-0.457	0.960	-0.346		
		0.590	-0.454				
		0.600	-0.446				
		0.640	-0.369				
		0.700	-0.364				
		0.750	-0.019**				
		0.820	-0.312				
		0.870	-0.356				
		0.930	-0.309				
		0.960	-0.343				
			Lower Surface				
0.020	-0.101	0.020	0.182	0.020	0.236	0.020	0.516
0.110	-0.023	0.060	0.226	0.060	0.289	0.060	1.105**
0.230	0.116	0.090	0.152	0.090	1.929**	0.110	0.176
0.400	0.003	0.120	0.138	0.120	0.026	0.250	0.038
0.490	-0.025	0.200	0.117	0.200	0.083	0.400	-0.001
0.630	2.754**	0.260	0.071	0.250	0.092	0.490	-0.051
0.750	-0.003	0.400	0.051	0.400	0.043	0.580	-0.007
0.850	0.058	0.490	0.026	0.490	-0.017	0.650	0.164
0.900	0.141	0.580	0.043	0.580	0.057	0.750	0.341
0.960	0.076	0.640	0.233	0.650	-0.030	0.830	0.493
		0.750	0.174	0.750	-0.017	0.900	0.530
		0.870	0.197	0.890	0.455	0.960	0.348
		0.930	0.106	0.930	0.358		
		0.960	0.002	0.960	-1.934**		
CN =	0.580		0.743		0.846		0.959

Table J-2. Continued.

Flight 221, Wing sweep = 26°, Time = 13-15-40-000, MINF = 0.855, Camber = 5/3, ALPT = 9.57, BETA = 0.86, QINF = 307.5, RNPU = 2.4E+06, CNWP = 0.4201

η = 0.93		0.76		0.59		0.40	
			Upper Surface				
x/c	CP	*x/c*	CP	*x/c*	CP	*x/c*	CP
0.020	-0.321	0.000	0.858	0.000	0.951**	0.010	-0.856
0.060	-0.493	0.020	-0.532	0.020	-0.522	0.020	-0.932
0.110	-0.675	0.040	-0.392	0.060	-2.912**	0.060	-1.029
0.200	-0.922	0.060	-0.656	0.090	-0.844	0.110	-1.145
0.230	-0.893	0.090	-0.770	0.110	-0.895	0.140	-1.288
0.400	-0.880	0.130	-0.863	0.130	-0.965	0.190	-1.955**
0.490	-0.786	0.150	-0.977	0.150	-1.085	0.250	-1.291
0.590	-0.353	0.200	-0.995	0.210	-1.042	0.400	-0.959
0.630	-0.233	0.250	-1.035	0.250	-1.105	0.490	-0.836
0.700	-0.210	0.260	-1.048	0.340	-1.108	0.580	-0.775
0.750	-0.412	0.280	-1.034	0.370	-1.112	0.650	-0.751
0.810	-0.416	0.290	-1.034	0.400	-1.118	0.700	-0.733
0.840	-0.403	0.310	-1.072	0.410	2.448**	0.750	-0.718
0.900	-0.389	0.320	-1.063	0.430	-1.101	0.800	-0.527
0.960	-0.205	0.340	-1.035	0.440	-1.090	0.830	-0.395
		0.350	-0.400**	0.460	-1.110	0.900	-0.361
		0.370	-1.041	0.490	-1.068	0.960	-0.362
		0.380	-1.073	0.500	-0.916		
		0.400	-1.003	0.520	-0.726		
		0.410	-1.031	0.540	-0.636		
		0.430	-1.009	0.550	-0.630		
		0.440	-0.945	0.580	-0.606		
		0.460	-0.757	0.600	-0.551		
		0.470	-0.593	0.610	-0.529		
		0.490	-0.564	0.650	0.475**		
		0.500	-0.529	0.700	-0.518		
		0.520	-0.526	0.750	-0.568		
		0.530	-0.500	0.820	-0.467		
		0.550	-0.489	0.890	-0.423		
		0.560	-0.468	0.900	-0.438		
		0.580	-0.471	0.960	-0.356		
		0.590	-0.510				
		0.600	-0.491				
		0.640	-0.415				
		0.700	-0.417				
		0.750	-0.053**				
		0.820	-0.370				
		0.870	-0.391				
		0.930	-0.362				
		0.960	-0.360				
			Lower Surface				
0.020	-0.088	0.020	0.209	0.020	0.230	0.020	0.502
0.110	-0.016	0.060	0.232	0.060	0.309	0.060	1.086**
0.230	0.117	0.090	0.154	0.090	1.925**	0.110	0.160
0.400	0.001	0.120	0.164	0.120	0.045	0.250	0.048
0.490	-0.060	0.200	0.108	0.200	0.090	0.400	0.000
0.630	2.751**	0.260	0.065	0.250	0.085	0.490	-0.043
0.750	-0.072	0.400	0.045	0.400	0.033	0.580	-0.004
0.850	0.008	0.490	0.005	0.490	-0.048	0.650	0.144
0.900	0.103	0.580	0.019	0.580	0.054	0.750	0.359
0.960	0.052	0.640	0.206	0.650	-0.043	0.830	0.481
		0.750	0.130	0.750	-0.023	0.900	0.519
		0.870	0.168	0.890	0.441	0.960	0.342
		0.930	0.079	0.930	0.352		
		0.960	-0.032	0.960	-1.958**		
CN =	0.553		0.735		0.831		0.996

Table J-2. Continued.

Flight 221, Wing sweep = 26°, Time = 13-15-41-500, MINF = 0.852, Camber = 5/2, ALPT = 10.29, BETA = 0.48, QINF = 307.1, RNPU = 2.4E+06, CNWP = 0.3694

η = 0.93		0.76		0.59		0.40	
			Upper Surface				
x/c	CP	*x/c*	CP	*x/c*	CP	*x/c*	CP
0.020	-0.503	0.000	0.824	0.000	0.992**	0.010	-0.907
0.060	-0.574	0.020	-0.643	0.020	-0.752	0.020	-0.954
0.110	-0.682	0.040	-0.621	0.060	-2.965**	0.060	-1.086
0.200	-0.941	0.060	-0.697	0.090	-0.876	0.110	-1.184
0.230	-0.937	0.090	-0.806	0.110	-0.952	0.140	-1.320
0.400	-0.858	0.130	-0.920	0.130	-1.004	0.190	-1.967**
0.490	-0.653	0.150	-1.014	0.150	-1.115	0.250	-1.350
0.590	-0.285	0.200	-1.041	0.210	-1.069	0.400	-1.001
0.630	-0.255	0.250	-1.081	0.250	-1.150	0.490	-0.799
0.700	-0.227	0.260	-1.083	0.340	-1.149	0.580	-0.685
0.750	-0.335	0.280	-1.082	0.370	-1.147	0.650	-0.614
0.810	-0.320	0.290	-1.073	0.400	-1.057	0.700	-0.593
0.840	-0.319	0.310	-1.106	0.410	2.442**	0.750	-0.615
0.900	-0.326	0.320	-1.107	0.430	-0.818	0.800	-0.531
0.960	-0.213	0.340	-1.066	0.440	-0.729	0.830	-0.535
		0.350	-0.395**	0.460	-0.697	0.900	-0.483
		0.370	-0.912	0.490	-0.571	0.960	-0.406
		0.380	-0.842	0.500	-0.668		
		0.400	-0.653	0.520	-0.625		
		0.410	-0.659	0.540	-0.617		
		0.430	-0.573	0.550	-0.623		
		0.440	-0.580	0.580	-0.672		
		0.460	-0.552	0.600	-0.568		
		0.470	-0.517	0.610	-0.549		
		0.490	-0.526	0.650	0.467**		
		0.500	-0.515	0.700	-0.520		
		0.520	-0.538	0.750	-0.560		
		0.530	-0.502	0.820	-0.444		
		0.550	-0.523	0.890	-0.420		
		0.560	-0.473	0.900	-0.398		
		0.580	-0.485	0.960	-0.323		
		0.590	-0.508				
		0.600	-0.486				
		0.640	-0.403				
		0.700	-0.409				
		0.750	-0.065**				
		0.820	-0.387				
		0.870	-0.393				
		0.930	-0.390				
		0.960	-0.377				
			Lower Surface				
0.020	0.034	0.020	0.311	0.020	0.327	0.020	0.609
0.110	0.009	0.060	0.303	0.060	0.353	0.060	1.092**
0.230	0.133	0.090	0.208	0.090	1.918**	0.110	0.220
0.400	-0.001	0.120	0.184	0.120	0.092	0.250	0.085
0.490	-0.069	0.200	0.145	0.200	0.115	0.400	0.030
0.630	2.746**	0.260	0.106	0.250	0.134	0.490	-0.016
0.750	-0.075	0.400	0.058	0.400	0.047	0.580	0.016
0.850	-0.028	0.490	0.036	0.490	-0.046	0.650	0.164
0.900	0.045	0.580	0.039	0.580	0.067	0.750	0.365
0.960	0.019	0.640	0.218	0.650	-0.066	0.830	0.493
		0.750	0.126	0.750	-0.033	0.900	0.519
		0.870	0.143	0.890	0.455	0.960	0.342
		0.930	0.066	0.930	0.351		
		0.960	-0.023	0.960	-1.967**		
CN =	0.526		0.741		0.817		1.028

Table J-2. Continued.

Flight 221, Wing sweep = 26°, Time = 13-15-42-000, MINF = 0.851, Camber = 5/0, ALPT = 10.90, BETA = 0.60, QINF = 307.2, RNPU = 2.4E+06, CNWP = 0.3690

η = 0.93		0.76		0.59		0.40	
			Upper Surface				
x/c	CP	*x/c*	CP	*x/c*	CP	*x/c*	CP
0.020	-0.694	0.000	0.808	0.000	0.913**	0.010	-0.978
0.060	-0.697	0.020	-0.832	0.020	-0.849	0.020	-1.059
0.110	-0.742	0.040	-0.692	0.060	-3.044**	0.060	-1.137
0.200	-0.969	0.060	-0.807	0.090	-0.961	0.110	-1.245
0.230	-0.977	0.090	-0.890	0.110	-1.017	0.140	-1.361
0.400	-0.953	0.130	-0.965	0.130	-1.066	0.190	-1.971**
0.490	-0.414	0.150	-1.070	0.150	-1.185	0.250	-1.145
0.590	-0.319	0.200	-1.094	0.210	-1.127	0.400	-0.856
0.630	-0.292	0.250	-0.911	0.250	-1.181	0.490	-0.785
0.700	-0.250	0.260	-0.968	0.340	-1.079	0.580	-0.709
0.750	-0.313	0.280	-0.847	0.370	-0.914	0.650	-0.647
0.810	-0.317	0.290	-0.771	0.400	-0.736	0.700	-0.627
0.840	-0.308	0.310	-0.808	0.410	2.438**	0.750	-0.597
0.900	-0.315	0.320	-0.790	0.430	-0.705	0.800	-0.540
0.960	-0.210	0.340	-0.731	0.440	-0.673	0.830	-0.566
		0.350	-0.259**	0.460	-0.674	0.900	-0.522
		0.370	-0.620	0.490	-0.656	0.960	-0.481
		0.380	-0.658	0.500	-0.663		
		0.400	-0.592	0.520	-0.628		
		0.410	-0.609	0.540	-0.621		
		0.430	-0.588	0.550	-0.626		
		0.440	-0.581	0.580	-0.625		
		0.460	-0.579	0.600	-0.571		
		0.470	-0.546	0.610	-0.540		
		0.490	-0.569	0.650	0.483**		
		0.500	-0.530	0.700	-0.521		
		0.520	-0.587	0.750	-0.539		
		0.530	-0.544	0.820	-0.460		
		0.550	-0.598	0.890	-0.440		
		0.560	-0.531	0.900	-0.438		
		0.580	-0.541	0.960	-0.348		
		0.590	-0.560				
		0.600	-0.533				
		0.640	-0.455				
		0.700	-0.466				
		0.750	-0.094**				
		0.820	-0.402				
		0.870	-0.397				
		0.930	-0.386				
		0.960	-0.374				
			Lower Surface				
0.020	0.079	0.020	0.372	0.020	0.398	0.020	0.642
0.110	0.031	0.060	0.332	0.060	0.388	0.060	1.088**
0.230	0.155	0.090	0.235	0.090	1.913**	0.110	0.270
0.400	0.002	0.120	0.209	0.120	0.113	0.250	0.107
0.490	-0.022	0.200	0.155	0.200	0.118	0.400	0.047
0.630	2.741**	0.260	0.123	0.250	0.151	0.490	0.002
0.750	-0.124	0.400	0.079	0.400	0.077	0.580	0.017
0.850	-0.073	0.490	0.040	0.490	-0.064	0.650	0.174
0.900	0.001	0.580	0.035	0.580	0.063	0.750	0.370
0.960	-0.002	0.640	0.214	0.650	-0.084	0.830	0.493
		0.750	0.097	0.750	-0.037	0.900	0.530
		0.870	0.112	0.890	0.451	0.960	0.332
		0.930	0.048	0.930	0.354		
		0.960	-0.049	0.960	-1.982**		
CN =	0.540		0.733		0.820		1.018

Table J-2. Continued.

Flight 221, Wing sweep = 26°, Time = 13-15-43-000, MINF = 0.849, Camber = 5/-1, ALPT = 11.80, BETA = 0.28, QINF = 306.8, RNPU = 2.4E+06, CNWP = 0.3500

η = 0.93		0.76		0.59		0.40	
			Upper Surface				
x/c	CP	*x/c*	CP	*x/c*	CP	*x/c*	CP
0.020	-0.791	0.000	0.745	0.000	0.851**	0.010	-1.087
0.060	-0.803	0.020	-0.939	0.020	-0.931	0.020	-1.137
0.110	-0.839	0.040	-0.765	0.060	-3.028**	0.060	-1.195
0.200	-1.003	0.060	-0.879	0.090	-1.064	0.110	-1.299
0.230	-1.024	0.090	-0.979	0.110	-1.083	0.140	-1.427
0.400	-0.795	0.130	-1.050	0.130	-1.131	0.190	-1.983**
0.490	-0.645	0.150	-1.148	0.150	-1.231	0.250	-1.051
0.590	-0.363	0.200	-1.157	0.210	-1.105	0.400	-0.866
0.630	-0.265	0.250	-1.069	0.250	-0.861	0.490	-0.780
0.700	-0.215	0.260	-1.076	0.340	-0.751	0.580	-0.736
0.750	-0.250	0.280	-0.954	0.370	-0.734	0.650	-0.667
0.810	-0.270	0.290	-0.877	0.400	-0.746	0.700	-0.658
0.840	-0.238	0.310	-1.016	0.410	2.432**	0.750	-0.657
0.900	-0.249	0.320	-1.024	0.430	-0.701	0.800	-0.598
0.960	-0.206	0.340	-0.873	0.440	-0.663	0.830	-0.588
		0.350	-0.342**	0.460	-0.670	0.900	-0.517
		0.370	-0.841	0.490	-0.644	0.960	-0.445
		0.380	-0.873	0.500	-0.686		
		0.400	-0.727	0.520	-0.657		
		0.410	-0.766	0.540	-0.670		
		0.430	-0.787	0.550	-0.694		
		0.440	-0.696	0.580	-0.655		
		0.460	-0.729	0.600	-0.614		
		0.470	-0.662	0.610	-0.614		
		0.490	-0.657	0.650	0.395**		
		0.500	-0.659	0.700	-0.627		
		0.520	-0.674	0.750	-0.646		
		0.530	-0.619	0.820	-0.509		
		0.550	-0.638	0.890	-0.466		
		0.560	-0.551	0.900	-0.459		
		0.580	-0.589	0.960	-0.385		
		0.590	-0.573				
		0.600	-0.558				
		0.640	-0.405				
		0.700	-0.412				
		0.750	-0.078**				
		0.820	-0.250				
		0.870	-0.367				
		0.930	-0.255				
		0.960	-0.265				
			Lower Surface				
0.020	0.164	0.020	0.446	0.020	0.458	0.020	0.671
0.110	0.062	0.060	0.367	0.060	0.432	0.060	1.095**
0.230	0.157	0.090	0.278	0.090	1.907**	0.110	0.276
0.400	0.014	0.120	0.221	0.120	0.152	0.250	0.145
0.490	-0.046	0.200	0.182	0.200	0.129	0.400	0.077
0.630	2.735**	0.260	0.156	0.250	0.178	0.490	0.007
0.750	-0.149	0.400	0.107	0.400	0.102	0.580	0.042
0.850	-0.076	0.490	0.056	0.490	-0.067	0.650	0.187
0.900	-0.029	0.580	0.037	0.580	0.082	0.750	0.376
0.960	-0.009	0.640	0.213	0.650	-0.086	0.830	0.495
		0.750	0.082	0.750	-0.046	0.900	0.536
		0.870	0.109	0.890	0.450	0.960	0.338
		0.930	0.043	0.930	0.352		
		0.960	-0.051	0.960	-1.964**		
CN =	0.539		0.778		0.825		1.044

Table J-2. Continued.

Flight 221, Wing sweep = 26°, Time = 13-15-44-000, MINF = 0.846, Camber = 5/-1, ALPT = 12.61, BETA = 0.14, QINF = 306.1, RNPU = 2.4E+06, CNWP = 0.2887

η = 0.93		0.76		0.59		0.40	
			Upper Surface				
x/c	CP	*x/c*	CP	*x/c*	CP	*x/c*	CP
0.020	-0.920	0.000	0.644	0.000	0.795**	0.010	-1.211
0.060	-0.980	0.020	-1.117	0.020	-1.051	0.020	-1.230
0.110	-1.008	0.040	-0.953	0.060	-3.135**	0.060	-1.329
0.200	-1.114	0.060	-1.011	0.090	-1.163	0.110	-1.321
0.230	-1.112	0.090	-1.092	0.110	-1.165	0.140	-1.003
0.400	-0.556	0.130	-1.164	0.130	-0.877	0.190	-1.996**
0.490	-0.441	0.150	-1.232	0.150	-0.839	0.250	-0.965
0.590	-0.366	0.200	-1.247	0.210	-0.772	0.400	-0.843
0.630	-0.286	0.250	-1.031	0.250	-0.737	0.490	-0.810
0.700	-0.229	0.260	-0.935	0.340	-0.689	0.580	-0.757
0.750	-0.265	0.280	-0.940	0.370	-0.668	0.650	-0.679
0.810	-0.273	0.290	-0.914	0.400	-0.714	0.700	-0.695
0.840	-0.244	0.310	-0.893	0.410	2.428**	0.750	-0.660
0.900	-0.227	0.320	-0.927	0.430	-0.667	0.800	-0.614
0.960	-0.215	0.340	-0.758	0.440	-0.639	0.830	-0.572
		0.350	-0.264**	0.460	-0.648	0.900	-0.528
		0.370	-0.676	0.490	-0.603	0.960	-0.479
		0.380	-0.660	0.500	-0.646		
		0.400	-0.545	0.520	-0.635		
		0.410	-0.562	0.540	-0.628		
		0.430	-0.560	0.550	-0.645		
		0.440	-0.500	0.580	-0.648		
		0.460	-0.550	0.600	-0.601		
		0.470	-0.527	0.610	-0.572		
		0.490	-0.466	0.650	0.403**		
		0.500	-0.482	0.700	-0.584		
		0.520	-0.472	0.750	-0.595		
		0.530	-0.435	0.820	-0.523		
		0.550	-0.453	0.890	-0.457		
		0.560	-0.386	0.900	-0.490		
		0.580	-0.397	0.960	-0.381		
		0.590	-0.422				
		0.600	-0.414				
		0.640	-0.396				
		0.700	-0.408				
		0.750	-0.098**				
		0.820	-0.256				
		0.870	-0.360				
		0.930	-0.301				
		0.960	-0.282				
			Lower Surface				
0.020	0.236	0.020	0.520	0.020	0.533	0.020	0.733
0.110	0.085	0.060	0.421	0.060	0.463	0.060	1.102**
0.230	0.181	0.090	0.306	0.090	1.902**	0.110	0.346
0.400	0.016	0.120	0.255	0.120	0.189	0.250	0.174
0.490	-0.056	0.200	0.188	0.200	0.154	0.400	0.111
0.630	2.732**	0.260	0.168	0.250	0.212	0.490	0.035
0.750	-0.148	0.400	0.109	0.400	0.127	0.580	0.043
0.850	-0.104	0.490	0.054	0.490	-0.054	0.650	0.185
0.900	-0.045	0.580	0.042	0.580	0.095	0.750	0.367
0.960	-0.042	0.640	0.200	0.650	-0.095	0.830	0.487
		0.750	0.065	0.750	-0.055	0.900	0.521
		0.870	0.105	0.890	0.427	0.960	0.332
		0.930	0.037	0.930	0.322		
		0.960	-0.053	0.960	-1.985**		
CN =	0.530		0.755		0.776		1.037

Table J-2. Continued.

Flight 211, Wing sweep = 26°, Time = 9-51-57-500, MINF = 0.704, Camber = 5/11, ALPT = 2.15, BETA = 0.25, QINF = 605.3, RNPU = 5.5E+06, CNWP = 0.3064

η = 0.93		0.76		0.59		0.40	
			Upper Surface				
x/c	CP	*x/c*	CP	*x/c*	CP	*x/c*	CP
0.020	0.506	0.000	0.106	0.000	0.441**	0.010	0.185
0.060	0.154	0.020	0.503	0.020	0.431	0.020	0.070
0.110	-0.075	0.040	0.315	0.060	0.708**	0.060	-0.237
0.200	-0.184	0.060	0.051	0.090	-0.165	0.110	-0.421
0.230	-0.205	0.090	-0.081	0.110	-0.280	0.140	-0.438
0.400	-0.182	0.130	-0.218	0.130	-2.886**	0.190	-2.886**
0.490	-0.207	0.150	-0.311	0.150	-0.328	0.250	-0.300
0.590	-0.285	0.200	-0.255	0.210	-0.328	0.400	-0.295
0.630	-0.327	0.250	-0.234	0.250	-0.264	0.490	-0.281
0.700	-0.441	0.260	-0.224	0.340	-0.287	0.580	-0.320
0.750	-0.661	0.280	-0.241	0.370	-0.304	0.650	-0.442
0.810	-0.620	0.290	-0.241	0.400	-0.279	0.700	-0.428
0.840	-0.645	0.310	-0.240	0.410	-0.642**	0.750	-0.537
0.900	-0.191	0.320	-0.241	0.430	-0.306	0.800	-0.690
0.960	-0.027	0.340	-0.242	0.440	-0.303	0.830	-0.679
		0.350	-0.190**	0.460	-0.317	0.900	-0.185
		0.370	-0.245	0.490	-0.284	0.960	-0.106
		0.380	-0.263	0.500	-0.331		
		0.400	-0.231	0.520	-0.325		
		0.410	-0.265	0.540	-0.338		
		0.430	-0.252	0.550	-0.328		
		0.440	-0.246	0.580	-0.340		
		0.460	-0.269	0.600	-0.378		
		0.470	-0.287	0.610	-0.410		
		0.490	-0.286	0.650	-0.558		
		0.500	-0.291	0.700	-0.508		
		0.520	-0.294	0.750	-0.499		
		0.530	-0.304	0.820	-0.718		
		0.550	-0.330	0.890	-0.198		
		0.560	-0.344	0.900	-0.190		
		0.580	-0.320	0.960	-0.136		
		0.590	-0.364				
		0.600	-0.364				
		0.640	-0.530				
		0.700	-0.514				
		0.750	-0.056**				
		0.820	-0.562				
		0.870	-0.542				
		0.930	-0.362				
		0.960	-0.272				
			Lower Surface				
0.020	-1.262	0.020	-0.907	0.020	-1.286	0.020	-0.609
0.110	-0.299	0.060	-0.585	0.060	-0.375	0.060	-1.522
0.230	-0.129	0.090	-0.389	0.090	-0.289	0.110	-0.323
0.400	-0.014	0.120	-0.223	0.120	-0.311	0.250	-0.255
0.490	0.043	0.200	-0.131	0.200	-0.133	0.400	-0.191
0.630	0.386**	0.260	-0.128	0.250	-0.191	0.490	-0.169
0.750	0.172	0.400	-0.059	0.400	-0.122	0.580	-0.108
0.850	0.197	0.490	-0.014	0.490	-0.062	0.650	0.066
0.900	0.268	0.580	0.044	0.580	-0.019	0.750	0.300
0.960	0.195	0.640	0.234	0.650	-0.062	0.830	0.398
		0.750	0.289	0.750	-0.026	0.900	0.458
		0.870	0.344	0.890	0.436	0.960	0.332
		0.930	0.292	0.930	0.353		
		0.960	0.207	0.960	0.320		
CN =	0.260		0.324		0.287		0.232

Table J-2. Continued.

Flight 211, Wing sweep = 26°, Time = 9-52-4-000, MINF = 0.703, Camber = 5/11, ALPT = 4.19, BETA = 0.17, QINF = 604.2, RNPU = 5.5E+06, CNWP = 0.3873

η = 0.93		0.76		0.59		0.40	
			Upper Surface				
x/c	CP	*x/c*	CP	*x/c*	CP	*x/c*	CP
0.020	0.348	0.000	0.466	0.000	0.562**	0.010	-0.220
0.060	0.003	0.020	0.210	0.020	0.104	0.020	-0.297
0.110	-0.218	0.040	0.080	0.060	0.474**	0.060	-0.585
0.200	-0.286	0.060	-0.179	0.090	-0.413	0.110	-0.717
0.230	-0.306	0.090	-0.305	0.110	-0.541	0.140	-0.654
0.400	-0.238	0.130	-0.445	0.130	-2.889**	0.190	-2.889**
0.490	-0.241	0.150	-0.520	0.150	-0.542	0.250	-0.437
0.590	-0.331	0.200	-0.428	0.210	-0.511	0.400	-0.380
0.630	-0.367	0.250	-0.369	0.250	-0.403	0.490	-0.354
0.700	-0.476	0.260	-0.354	0.340	-0.391	0.580	-0.383
0.750	-0.669	0.280	-0.361	0.370	-0.397	0.650	-0.497
0.810	-0.630	0.290	-0.351	0.400	-0.359	0.700	-0.479
0.840	-0.665	0.310	-0.336	0.410	-0.641**	0.750	-0.572
0.900	-0.219	0.320	-0.342	0.430	-0.402	0.800	-0.670
0.960	-0.071	0.340	-0.343	0.440	-0.389	0.830	-0.673
		0.350	-0.186**	0.460	-0.391	0.900	-0.173
		0.370	-0.336	0.490	-0.362	0.960	-0.138
		0.380	-0.353	0.500	-0.404		
		0.400	-0.313	0.520	-0.393		
		0.410	-0.345	0.540	-0.397		
		0.430	-0.328	0.550	-0.392		
		0.440	-0.320	0.580	-0.402		
		0.460	-0.342	0.600	-0.440		
		0.470	-0.361	0.610	-0.468		
		0.490	-0.354	0.650	-0.615		
		0.500	-0.357	0.700	-0.557		
		0.520	-0.355	0.750	-0.528		
		0.530	-0.360	0.820	-0.746		
		0.550	-0.391	0.890	-0.224		
		0.560	-0.393	0.900	-0.203		
		0.580	-0.377	0.960	-0.171		
		0.590	-0.421				
		0.600	-0.422				
		0.640	-0.574				
		0.700	-0.542				
		0.750	-0.027**				
		0.820	-0.608				
		0.870	-0.583				
		0.930	-0.430				
		0.960	-0.337				
			Lower Surface				
0.020	-0.687	0.020	-0.571	0.020	-0.453	0.020	-0.125
0.110	-0.185	0.060	-0.158	0.060	-0.096	0.060	-1.522
0.230	-0.034	0.090	-0.151	0.090	-0.098	0.110	-0.090
0.400	0.011	0.120	-0.089	0.120	-0.160	0.250	-0.161
0.490	0.041	0.200	-0.032	0.200	-0.037	0.400	-0.125
0.630	0.390**	0.260	-0.055	0.250	-0.100	0.490	-0.116
0.750	0.190	0.400	-0.024	0.400	-0.060	0.580	-0.077
0.850	0.227	0.490	0.004	0.490	-0.036	0.650	0.097
0.900	0.311	0.580	0.053	0.580	0.007	0.750	0.333
0.960	0.203	0.640	0.268	0.650	-0.035	0.830	0.423
		0.750	0.324	0.750	-0.010	0.900	0.478
		0.870	0.402	0.890	0.464	0.960	0.329
		0.930	0.332	0.930	0.374		
		0.960	0.225	0.960	0.321		
CN =	0.359		0.495		0.443		0.391

Table J-2. Continued.

Flight 211, Wing sweep = 26°, Time = 9-52-10-500, MINF = 0.710, Camber = 5/11, ALPT = 6.26, BETA = 0.14, QINF = 611.4, RNPU = 5.5E+06, CNWP = 0.3234

η = 0.93		0.76		0.59		0.40	
			Upper Surface				
x/c	CP	*x/c*	CP	*x/c*	CP	*x/c*	CP
0.020	0.090	0.000	0.783	0.000	0.592**	0.010	-0.762
0.060	-0.213	0.020	-0.163	0.020	-0.335	0.020	-0.657
0.110	-0.388	0.040	-0.228	0.060	0.159**	0.060	-1.040
0.200	-0.399	0.060	-0.499	0.090	-0.726	0.110	-0.917
0.230	-0.405	0.090	-0.591	0.110	-0.854	0.140	-1.313
0.400	-0.293	0.130	-0.760	0.130	-2.836**	0.190	-2.836**
0.490	-0.278	0.150	-0.792	0.150	-0.702	0.250	-0.545
0.590	-0.360	0.200	-0.623	0.210	-0.683	0.400	-0.461
0.630	-0.392	0.250	-0.504	0.250	-0.538	0.490	-0.423
0.700	-0.486	0.260	-0.473	0.340	-0.492	0.580	-0.436
0.750	-0.764	0.280	-0.481	0.370	-0.485	0.650	-0.551
0.810	-0.641	0.290	-0.464	0.400	-0.455	0.700	-0.535
0.840	-0.677	0.310	-0.437	0.410	-0.614**	0.750	-0.595
0.900	-0.263	0.320	-0.441	0.430	-0.477	0.800	-0.641
0.960	-0.121	0.340	-0.438	0.440	-0.462	0.830	-0.673
		0.350	-0.185**	0.460	-0.459	0.900	-0.187
		0.370	-0.417	0.490	-0.431	0.960	-0.160
		0.380	-0.436	0.500	-0.463		
		0.400	-0.381	0.520	-0.451		
		0.410	-0.415	0.540	-0.452		
		0.430	-0.396	0.550	-0.440		
		0.440	-0.385	0.580	-0.454		
		0.460	-0.406	0.600	-0.487		
		0.470	-0.417	0.610	-0.509		
		0.490	-0.415	0.650	-0.652		
		0.500	-0.416	0.700	-0.595		
		0.520	-0.407	0.750	-0.542		
		0.530	-0.409	0.820	-0.748		
		0.550	-0.439	0.890	-0.202		
		0.560	-0.442	0.900	-0.199		
		0.580	-0.416	0.960	-0.162		
		0.590	-0.457				
		0.600	-0.458				
		0.640	-0.602				
		0.700	-0.554				
		0.750	-0.022**				
		0.820	-0.652				
		0.870	-0.562				
		0.930	-0.279				
		0.960	-0.249				
			Lower Surface				
0.020	-0.325	0.020	-0.200	0.020	-0.054	0.020	0.329
0.110	-0.102	0.060	0.031	0.060	0.111	0.060	0.019
0.230	0.043	0.090	0.006	0.090	0.066	0.110	0.060
0.400	0.032	0.120	0.025	0.120	-0.014	0.250	-0.056
0.490	0.049	0.200	0.038	0.200	0.043	0.400	-0.058
0.630	0.410**	0.260	0.018	0.250	-0.007	0.490	-0.059
0.750	0.183	0.400	0.020	0.400	-0.001	0.580	-0.027
0.850	0.211	0.490	0.033	0.490	-0.023	0.650	0.130
0.900	0.311	0.580	0.070	0.580	0.031	0.750	0.358
0.960	0.184	0.640	0.282	0.650	-0.033	0.830	0.442
		0.750	0.325	0.750	0.016	0.900	0.495
		0.870	0.412	0.890	0.474	0.960	0.339
		0.930	0.328	0.930	0.380		
		0.960	0.217	0.960	0.301		
CN =	0.450		0.625		0.576		0.679

Table J-2. Continued.

Flight 211, Wing sweep = 26°, Time = 9-52-15-000, MINF = 0.705, Camber = 5/10, ALPT = 7.10, BETA = 0.11, QINF = 601.1, RNPU = 5.4E+06, CNWP = 0.3654

η = 0.93		0.76		0.59		0.40	
			Upper Surface				
x/c	CP	*x/c*	CP	*x/c*	CP	*x/c*	CP
0.020	-0.094	0.000	0.834	0.000	0.548**	0.010	-1.228
0.060	-0.339	0.020	-0.384	0.020	-0.571	0.020	-0.956
0.110	-0.483	0.040	-0.398	0.060	0.034**	0.060	-1.206
0.200	-0.461	0.060	-0.668	0.090	-0.771	0.110	-1.084
0.230	-0.468	0.090	-0.734	0.110	-0.947	0.140	-1.304
0.400	-0.319	0.130	-0.808	0.130	-2.875**	0.190	-2.875**
0.490	-0.297	0.150	-0.998	0.150	-1.162	0.250	-0.588
0.590	-0.386	0.200	-0.670	0.210	-0.716	0.400	-0.495
0.630	-0.415	0.250	-0.558	0.250	-0.578	0.490	-0.456
0.700	-0.507	0.260	-0.533	0.340	-0.536	0.580	-0.465
0.750	-0.772	0.280	-0.533	0.370	-0.523	0.650	-0.579
0.810	-0.654	0.290	-0.511	0.400	-0.494	0.700	-0.574
0.840	-0.698	0.310	-0.488	0.410	-0.616**	0.750	-0.636
0.900	-0.288	0.320	-0.486	0.430	-0.510	0.800	-0.639
0.960	-0.140	0.340	-0.484	0.440	-0.494	0.830	-0.616
		0.350	-0.182**	0.460	-0.498	0.900	-0.220
		0.370	-0.453	0.490	-0.456	0.960	-0.175
		0.380	-0.481	0.500	-0.490		
		0.400	-0.424	0.520	-0.492		
		0.410	-0.455	0.540	-0.492		
		0.430	-0.435	0.550	-0.469		
		0.440	-0.408	0.580	-0.472		
		0.460	-0.440	0.600	-0.517		
		0.470	-0.441	0.610	-0.543		
		0.490	-0.444	0.650	-0.705		
		0.500	-0.436	0.700	-0.612		
		0.520	-0.436	0.750	-0.567		
		0.530	-0.428	0.820	-0.715		
		0.550	-0.465	0.890	-0.208		
		0.560	-0.479	0.900	-0.199		
		0.580	-0.447	0.960	-0.156		
		0.590	-0.492				
		0.600	-0.476				
		0.640	-0.620				
		0.700	-0.573				
		0.750	-0.022**				
		0.820	-0.590				
		0.870	-0.578				
		0.930	-0.370				
		0.960	-0.299				
			Lower Surface				
0.020	-0.195	0.020	-0.013	0.020	0.095	0.020	0.445
0.110	-0.055	0.060	0.124	0.060	0.194	0.060	0.029
0.230	0.085	0.090	0.086	0.090	0.132	0.110	0.150
0.400	0.044	0.120	0.078	0.120	0.056	0.250	-0.008
0.490	0.057	0.200	0.083	0.200	0.079	0.400	-0.028
0.630	0.425**	0.260	0.056	0.250	0.034	0.490	-0.027
0.750	0.174	0.400	0.042	0.400	0.027	0.580	0.001
0.850	0.205	0.490	0.050	0.490	-0.021	0.650	0.152
0.900	0.291	0.580	0.078	0.580	0.047	0.750	0.371
0.960	0.162	0.640	0.284	0.650	-0.038	0.830	0.456
		0.750	0.325	0.750	0.026	0.900	0.509
		0.870	0.405	0.890	0.480	0.960	0.350
		0.930	0.310	0.930	0.381		
		0.960	0.207	0.960	0.313		
CN =	0.499		0.692		0.647		0.751

Table J-2. Continued.

Flight 211, Wing sweep = 26°, Time = 9-52-19-500, MINF = 0.695, Camber = 5/10, ALPT = 8.26, BETA = 0.11, QINF = 582.0, RNPU = 5.3E+06, CNWP = 0.4441

η = 0.93		0.76		0.59		0.40	
			Upper Surface				
x/c	CP	*x/c*	CP	*x/c*	CP	*x/c*	CP
0.020	-0.410	0.000	0.775	0.000	0.451**	0.010	-1.290
0.060	-0.557	0.020	-0.837	0.020	-1.011	0.020	-1.485
0.110	-0.595	0.040	-0.682	0.060	-0.126**	0.060	-1.471
0.200	-0.533	0.060	-1.007	0.090	-1.306	0.110	-1.546
0.230	-0.522	0.090	-1.089	0.110	-1.328	0.140	-1.465
0.400	-0.361	0.130	-0.823	0.130	-2.959**	0.190	-2.959**
0.490	-0.343	0.150	-1.020	0.150	-1.406	0.250	-0.618
0.590	-0.417	0.200	-1.119	0.210	-0.865	0.400	-0.514
0.630	-0.455	0.250	-0.617	0.250	-0.605	0.490	-0.470
0.700	-0.544	0.260	-0.588	0.340	-0.567	0.580	-0.491
0.750	-0.790	0.280	-0.593	0.370	-0.570	0.650	-0.580
0.810	-0.716	0.290	-0.563	0.400	-0.530	0.700	-0.578
0.840	-0.759	0.310	-0.532	0.410	-0.625**	0.750	-0.624
0.900	-0.328	0.320	-0.539	0.430	-0.548	0.800	-0.553
0.960	-0.187	0.340	-0.520	0.440	-0.527	0.830	-0.523
		0.350	-0.188**	0.460	-0.523	0.900	-0.218
		0.370	-0.503	0.490	-0.487	0.960	-0.129
		0.380	-0.525	0.500	-0.530		
		0.400	-0.458	0.520	-0.515		
		0.410	-0.490	0.540	-0.525		
		0.430	-0.473	0.550	-0.498		
		0.440	-0.454	0.580	-0.496		
		0.460	-0.473	0.600	-0.541		
		0.470	-0.488	0.610	-0.556		
		0.490	-0.472	0.650	-0.741		
		0.500	-0.468	0.700	-0.634		
		0.520	-0.461	0.750	-0.599		
		0.530	-0.466	0.820	-0.668		
		0.550	-0.494	0.890	-0.190		
		0.560	-0.501	0.900	-0.165		
		0.580	-0.475	0.960	-0.130		
		0.590	-0.520				
		0.600	-0.507				
		0.640	-0.654				
		0.700	-0.620				
		0.750	-0.012**				
		0.820	-0.651				
		0.870	-0.578				
		0.930	-0.287				
		0.960	-0.228				
			Lower Surface				
0.020	0.050	0.020	0.205	0.020	0.284	0.020	0.573
0.110	0.012	0.060	0.238	0.060	0.300	0.060	0.041
0.230	0.137	0.090	0.181	0.090	0.238	0.110	0.229
0.400	0.056	0.120	0.159	0.120	0.140	0.250	0.046
0.490	0.064	0.200	0.138	0.200	0.134	0.400	0.027
0.630	0.457**	0.260	0.106	0.250	0.099	0.490	0.014
0.750	0.155	0.400	0.076	0.400	0.070	0.580	0.033
0.850	0.190	0.490	0.083	0.490	0.004	0.650	0.168
0.900	0.270	0.580	0.103	0.580	0.085	0.750	0.387
0.960	0.147	0.640	0.291	0.650	-0.031	0.830	0.465
		0.750	0.335	0.750	0.037	0.900	0.516
		0.870	0.406	0.890	0.477	0.960	0.344
		0.930	0.314	0.930	0.377		
		0.960	0.208	0.960	0.299		
CN =	0.571		0.807		0.766		0.837

Table J-2. Continued.

Flight 211, Wing sweep = 26°, Time = 9-55-37-500, MINF = 0.697, Camber = 5/-1, ALPT = 2.04, BETA = 0.17, QINF = 583.0, RNPU = 5.3E+06, CNWP = 0.2090

η = 0.93		0.76		0.59		0.40	
			Upper Surface				
x/c	CP	*x/c*	CP	*x/c*	CP	*x/c*	CP
0.020	0.488	0.000	0.140	0.000	0.480**	0.010	0.182
0.060	0.127	0.020	0.445	0.020	0.411	0.020	0.057
0.110	-0.094	0.040	0.279	0.060	0.676**	0.060	-0.235
0.200	-0.190	0.060	0.022	0.090	-0.181	0.110	-0.427
0.230	-0.205	0.090	-0.106	0.110	-0.299	0.140	-0.438
0.400	-0.150	0.130	-0.246	0.130	-2.939**	0.190	-2.939**
0.490	-0.135	0.150	-0.330	0.150	-0.345	0.250	-0.310
0.590	-0.165	0.200	-0.276	0.210	-0.338	0.400	-0.299
0.630	-0.153	0.250	-0.242	0.250	-0.288	0.490	-0.286
0.700	-0.125	0.260	-0.235	0.340	-0.297	0.580	-0.327
0.750	-0.102	0.280	-0.247	0.370	-0.311	0.650	-0.453
0.810	-0.087	0.290	-0.247	0.400	-0.278	0.700	-0.439
0.840	-0.093	0.310	-0.238	0.410	-0.609**	0.750	-0.559
0.900	-0.087	0.320	-0.245	0.430	-0.313	0.800	-0.687
0.960	-0.010	0.340	-0.247	0.440	-0.308	0.830	-0.662
		0.350	-0.189**	0.460	-0.313	0.900	-0.177
		0.370	-0.250	0.490	-0.299	0.960	-0.112
		0.380	-0.264	0.500	-0.328		
		0.400	-0.233	0.520	-0.332		
		0.410	-0.256	0.540	-0.336		
		0.430	-0.243	0.550	-0.328		
		0.440	-0.241	0.580	-0.339		
		0.460	-0.261	0.600	-0.373		
		0.470	-0.274	0.610	-0.397		
		0.490	-0.278	0.650	-0.546		
		0.500	-0.282	0.700	-0.512		
		0.520	-0.268	0.750	-0.506		
		0.530	-0.280	0.820	-0.670		
		0.550	-0.310	0.890	-0.178		
		0.560	-0.316	0.900	-0.161		
		0.580	-0.294	0.960	-0.119		
		0.590	-0.331				
		0.600	-0.339				
		0.640	-0.471				
		0.700	-0.479				
		0.750	-0.154**				
		0.820	-0.471				
		0.870	-0.427				
		0.930	-0.297				
		0.960	-0.241				
			Lower Surface				
0.020	-1.262	0.020	-0.934	0.020	-1.206	0.020	-0.722
0.110	-0.300	0.060	-0.545	0.060	-0.309	0.060	-0.038
0.230	-0.132	0.090	-0.350	0.090	-0.276	0.110	-0.317
0.400	-0.087	0.120	-0.231	0.120	-0.276	0.250	-0.257
0.490	-0.088	0.200	-0.130	0.200	-0.130	0.400	-0.194
0.630	0.529**	0.260	-0.144	0.250	-0.191	0.490	-0.160
0.750	-0.025	0.400	-0.101	0.400	-0.135	0.580	-0.112
0.850	0.007	0.490	-0.072	0.490	-0.131	0.650	0.073
0.900	0.081	0.580	-0.034	0.580	-0.035	0.750	0.305
0.960	0.100	0.640	0.131	0.650	-0.138	0.830	0.394
		0.750	0.071	0.750	-0.019	0.900	0.455
		0.870	0.069	0.890	0.431	0.960	0.325
		0.930	0.068	0.930	0.355		
		0.960	0.038	0.960	0.298		
CN =	0.030		0.213		0.280		0.334

Table J-2. Continued.

Flight 211, Wing sweep = 26°, Time = 9-55-47-500, MINF = 0.708, Camber = 5/-1, ALPT = 6.26, BETA = 0.28, QINF = 601.0, RNPU = 5.4E+06, CNWP = 0.3272

η = 0.93		0.76		0.59		0.40	
			Upper Surface				
x/c	CP	*x/c*	CP	*x/c*	CP	*x/c*	CP
0.020	-0.023	0.000	0.816	0.000	0.613**	0.010	-1.053
0.060	-0.288	0.020	-0.292	0.020	-0.428	0.020	-0.698
0.110	-0.444	0.040	-0.199	0.060	0.131**	0.060	-1.093
0.200	-0.422	0.060	-0.603	0.090	-0.778	0.110	-0.905
0.230	-0.416	0.090	-0.664	0.110	-0.895	0.140	-1.319
0.400	-0.271	0.130	-0.820	0.130	-2.853**	0.190	-2.853**
0.490	-0.234	0.150	-0.817	0.150	-0.931	0.250	-0.557
0.590	-0.241	0.200	-0.668	0.210	-0.686	0.400	-0.476
0.630	-0.227	0.250	-0.525	0.250	-0.558	0.490	-0.433
0.700	-0.183	0.260	-0.498	0.340	-0.511	0.580	-0.451
0.750	-0.154	0.280	-0.497	0.370	-0.504	0.650	-0.552
0.810	-0.130	0.290	-0.479	0.400	-0.462	0.700	-0.543
0.840	-0.140	0.310	-0.452	0.410	-0.593**	0.750	-0.619
0.900	-0.128	0.320	-0.458	0.430	-0.489	0.800	-0.624
0.960	-0.041	0.340	-0.448	0.440	-0.473	0.830	-0.624
		0.350	-0.183**	0.460	-0.470	0.900	-0.185
		0.370	-0.431	0.490	-0.442	0.960	-0.163
		0.380	-0.445	0.500	-0.469		
		0.400	-0.397	0.520	-0.462		
		0.410	-0.415	0.540	-0.463		
		0.430	-0.387	0.550	-0.445		
		0.440	-0.379	0.580	-0.449		
		0.460	-0.405	0.600	-0.492		
		0.470	-0.411	0.610	-0.501		
		0.490	-0.404	0.650	-0.660		
		0.500	-0.399	0.700	-0.587		
		0.520	-0.383	0.750	-0.557		
		0.530	-0.386	0.820	-0.669		
		0.550	-0.422	0.890	-0.190		
		0.560	-0.428	0.900	-0.177		
		0.580	-0.399	0.960	-0.152		
		0.590	-0.435				
		0.600	-0.434				
		0.640	-0.554				
		0.700	-0.539				
		0.750	-0.167**				
		0.820	-0.595				
		0.870	-0.517				
		0.930	-0.363				
		0.960	-0.284				
			Lower Surface				
0.020	-0.217	0.020	-0.091	0.020	0.012	0.020	0.361
0.110	-0.090	0.060	0.069	0.060	0.136	0.060	-0.039
0.230	0.044	0.090	0.042	0.090	0.093	0.110	0.105
0.400	-0.033	0.120	0.037	0.120	0.034	0.250	-0.047
0.490	-0.057	0.200	0.046	0.200	0.050	0.400	-0.047
0.630	0.514**	0.260	0.019	0.250	0.007	0.490	-0.045
0.750	-0.048	0.400	-0.004	0.400	-0.005	0.580	-0.021
0.850	-0.024	0.490	-0.008	0.490	-0.095	0.650	0.140
0.900	0.051	0.580	-0.001	0.580	0.028	0.750	0.366
0.960	0.083	0.640	0.180	0.650	-0.139	0.830	0.442
		0.750	0.087	0.750	0.021	0.900	0.495
		0.870	0.100	0.890	0.474	0.960	0.338
		0.930	0.053	0.930	0.373		
		0.960	-0.002	0.960	0.301		
CN =	0.220		0.539		0.583		0.692

Table J-2. Continued.

Flight 211, Wing sweep = 26°, Time = 9-55-51-500, MINF = 0.712, Camber = 5/-1, ALPT = 7.06, BETA = 0.43, QINF = 606.7, RNPU = 5.4E+06, CNWP = 0.3830

η = 0.93		0.76		0.59		0.40	
			Upper Surface				
x/c	CP	*x/c*	CP	*x/c*	CP	*x/c*	CP
0.020	-0.192	0.000	0.839	0.000	0.559**	0.010	-1.206
0.060	-0.414	0.020	-0.488	0.020	-0.625	0.020	-1.204
0.110	-0.540	0.040	-0.477	0.060	-0.048**	0.060	-1.182
0.200	-0.473	0.060	-0.758	0.090	-1.051	0.110	-1.350
0.230	-0.468	0.090	-0.766	0.110	-1.058	0.140	-1.257
0.400	-0.294	0.130	-0.805	0.130	-2.819**	0.190	-2.819**
0.490	-0.255	0.150	-1.007	0.150	-1.172	0.250	-0.587
0.590	-0.264	0.200	-0.979	0.210	-0.792	0.400	-0.498
0.630	-0.244	0.250	-0.557	0.250	-0.591	0.490	-0.449
0.700	-0.197	0.260	-0.532	0.340	-0.536	0.580	-0.481
0.750	-0.166	0.280	-0.532	0.370	-0.538	0.650	-0.576
0.810	-0.146	0.290	-0.515	0.400	-0.494	0.700	-0.559
0.840	-0.157	0.310	-0.485	0.410	-0.580**	0.750	-0.638
0.900	-0.142	0.320	-0.490	0.430	-0.517	0.800	-0.621
0.960	-0.061	0.340	-0.477	0.440	-0.502	0.830	-0.610
		0.350	-0.182**	0.460	-0.494	0.900	-0.220
		0.370	-0.459	0.490	-0.464	0.960	-0.162
		0.380	-0.474	0.500	-0.490		
		0.400	-0.418	0.520	-0.484		
		0.410	-0.439	0.540	-0.478		
		0.430	-0.417	0.550	-0.463		
		0.440	-0.404	0.580	-0.463		
		0.460	-0.429	0.600	-0.510		
		0.470	-0.435	0.610	-0.529		
		0.490	-0.424	0.650	-0.678		
		0.500	-0.423	0.700	-0.600		
		0.520	-0.410	0.750	-0.559		
		0.530	-0.411	0.820	-0.660		
		0.550	-0.438	0.890	-0.209		
		0.560	-0.441	0.900	-0.186		
		0.580	-0.411	0.960	-0.146		
		0.590	-0.450				
		0.600	-0.437				
		0.640	-0.564				
		0.700	-0.541				
		0.750	-0.169**				
		0.820	-0.595				
		0.870	-0.514				
		0.930	-0.343				
		0.960	-0.264				
			Lower Surface				
0.020	-0.113	0.020	0.043	0.020	0.127	0.020	0.455
0.110	-0.055	0.060	0.139	0.060	0.204	0.060	-0.031
0.230	0.077	0.090	0.102	0.090	0.149	0.110	0.159
0.400	-0.015	0.120	0.087	0.120	0.083	0.250	-0.005
0.490	-0.049	0.200	0.075	0.200	0.081	0.400	-0.018
0.630	0.517**	0.260	0.048	0.250	0.042	0.490	-0.022
0.750	-0.055	0.400	0.019	0.400	0.018	0.580	-0.001
0.850	-0.035	0.490	0.009	0.490	-0.087	0.650	0.150
0.900	0.041	0.580	0.016	0.580	0.042	0.750	0.375
0.960	0.064	0.640	0.184	0.650	-0.141	0.830	0.461
		0.750	0.083	0.750	0.028	0.900	0.506
		0.870	0.097	0.890	0.475	0.960	0.349
		0.930	0.047	0.930	0.373		
		0.960	-0.009	0.960	0.282		
CN =	0.264		0.605		0.657		0.760

Table J-2. Continued.

Flight 211, Wing sweep = 26°, Time = 9-55-56-500, MINF = 0.704, Camber = 5/-1, ALPT = 8.09, BETA = 0.25, QINF = 590.5, RNPU = 5.3E+06, CNWP = 0.4400

η = 0.93		0.76		0.59		0.40	
			Upper Surface				
x/c	CP	*x/c*	CP	*x/c*	CP	*x/c*	CP
0.020	-0.452	0.000	0.776	0.000	0.508**	0.010	-1.215
0.060	-0.564	0.020	-0.867	0.020	-0.971	0.020	-1.431
0.110	-0.647	0.040	-0.672	0.060	-0.137**	0.060	-1.421
0.200	-0.532	0.060	-1.012	0.090	-1.290	0.110	-1.514
0.230	-0.509	0.090	-1.076	0.110	-1.303	0.140	-1.700
0.400	-0.325	0.130	-0.815	0.130	-2.884**	0.190	-2.884**
0.490	-0.271	0.150	-1.022	0.150	-1.386	0.250	-0.613
0.590	-0.279	0.200	-1.151	0.210	-1.162	0.400	-0.510
0.630	-0.266	0.250	-0.579	0.250	-0.577	0.490	-0.469
0.700	-0.218	0.260	-0.552	0.340	-0.547	0.580	-0.475
0.750	-0.186	0.280	-0.563	0.370	-0.546	0.650	-0.580
0.810	-0.157	0.290	-0.541	0.400	-0.510	0.700	-0.573
0.840	-0.172	0.310	-0.512	0.410	-0.584**	0.750	-0.640
0.900	-0.165	0.320	-0.521	0.430	-0.528	0.800	-0.551
0.960	-0.087	0.340	-0.506	0.440	-0.517	0.830	-0.516
		0.350	-0.177**	0.460	-0.510	0.900	-0.202
		0.370	-0.487	0.490	-0.473	0.960	-0.138
		0.380	-0.498	0.500	-0.506		
		0.400	-0.444	0.520	-0.504		
		0.410	-0.470	0.540	-0.500		
		0.430	-0.439	0.550	-0.489		
		0.440	-0.424	0.580	-0.490		
		0.460	-0.448	0.600	-0.523		
		0.470	-0.458	0.610	-0.538		
		0.490	-0.443	0.650	-0.703		
		0.500	-0.447	0.700	-0.606		
		0.520	-0.426	0.750	-0.576		
		0.530	-0.425	0.820	-0.627		
		0.550	-0.454	0.890	-0.159		
		0.560	-0.459	0.900	-0.147		
		0.580	-0.427	0.960	-0.113		
		0.590	-0.473				
		0.600	-0.455				
		0.640	-0.575				
		0.700	-0.568				
		0.750	-0.162**				
		0.820	-0.617				
		0.870	-0.529				
		0.930	-0.354				
		0.960	-0.267				
			Lower Surface				
0.020	0.036	0.020	0.218	0.020	0.285	0.020	0.567
0.110	0.006	0.060	0.231	0.060	0.299	0.060	-0.020
0.230	0.131	0.090	0.188	0.090	0.237	0.110	0.245
0.400	-0.009	0.120	0.142	0.120	0.161	0.250	0.042
0.490	-0.031	0.200	0.127	0.200	0.129	0.400	0.027
0.630	0.550**	0.260	0.105	0.250	0.099	0.490	0.023
0.750	-0.053	0.400	0.054	0.400	0.057	0.580	0.036
0.850	-0.040	0.490	0.040	0.490	-0.065	0.650	0.170
0.900	0.035	0.580	0.032	0.580	0.074	0.750	0.394
0.960	0.053	0.640	0.195	0.650	-0.132	0.830	0.464
		0.750	0.096	0.750	0.041	0.900	0.511
		0.870	0.096	0.890	0.489	0.960	0.353
		0.930	0.049	0.930	0.380		
		0.960	-0.010	0.960	0.301		
CN =	0.323		0.690		0.747		0.849

Table J-2. Continued.

Flight 211, Wing sweep = 26°, Time = 9-55-58-000, MINF = 0.700, Camber = 5/-1, ALPT = 8.46, BETA = 0.25, QINF = 583.6, RNPU = 5.3E+06, CNWP = 0.4425

η = 0.93		0.76		0.59		0.40	
			Upper Surface				
x/c	CP	*x/c*	CP	*x/c*	CP	*x/c*	CP
0.020	-0.556	0.000	0.728	0.000	0.442**	0.010	-1.410
0.060	-0.666	0.020	-0.998	0.020	-1.252	0.020	-1.530
0.110	-0.682	0.040	-0.750	0.060	-0.150**	0.060	-1.505
0.200	-0.548	0.060	-1.083	0.090	-1.319	0.110	-1.579
0.230	-0.547	0.090	-1.086	0.110	-1.380	0.140	-1.744
0.400	-0.330	0.130	-0.821	0.130	-2.915**	0.190	-2.915**
0.490	-0.291	0.150	-1.031	0.150	-1.458	0.250	-0.646
0.590	-0.300	0.200	-1.183	0.210	-1.172	0.400	-0.513
0.630	-0.274	0.250	-0.570	0.250	-0.614	0.490	-0.474
0.700	-0.222	0.260	-0.555	0.340	-0.557	0.580	-0.501
0.750	-0.197	0.280	-0.557	0.370	-0.560	0.650	-0.571
0.810	-0.170	0.290	-0.547	0.400	-0.513	0.700	-0.566
0.840	-0.186	0.310	-0.511	0.410	-0.588**	0.750	-0.614
0.900	-0.184	0.320	-0.528	0.430	-0.546	0.800	-0.533
0.960	-0.097	0.340	-0.519	0.440	-0.532	0.830	-0.502
		0.350	-0.174**	0.460	-0.523	0.900	-0.213
		0.370	-0.497	0.490	-0.486	0.960	-0.145
		0.380	-0.519	0.500	-0.528		
		0.400	-0.458	0.520	-0.514		
		0.410	-0.481	0.540	-0.503		
		0.430	-0.454	0.550	-0.495		
		0.440	-0.438	0.580	-0.486		
		0.460	-0.467	0.600	-0.532		
		0.470	-0.470	0.610	-0.548		
		0.490	-0.462	0.650	-0.704		
		0.500	-0.455	0.700	-0.614		
		0.520	-0.443	0.750	-0.596		
		0.530	-0.439	0.820	-0.628		
		0.550	-0.465	0.890	-0.167		
		0.560	-0.478	0.900	-0.148		
		0.580	-0.436	0.960	-0.108		
		0.590	-0.473				
		0.600	-0.467				
		0.640	-0.593				
		0.700	-0.581				
		0.750	-0.159**				
		0.820	-0.617				
		0.870	-0.539				
		0.930	-0.361				
		0.960	-0.275				
			Lower Surface				
0.020	0.086	0.020	0.264	0.020	0.339	0.020	0.592
0.110	0.019	0.060	0.260	0.060	0.327	0.060	-0.017
0.230	0.131	0.090	0.211	0.090	0.259	0.110	0.259
0.400	0.004	0.120	0.174	0.120	0.184	0.250	0.058
0.490	-0.032	0.200	0.132	0.200	0.141	0.400	0.041
0.630	0.550**	0.260	0.117	0.250	0.106	0.490	0.034
0.750	-0.059	0.400	0.054	0.400	0.062	0.580	0.032
0.850	-0.052	0.490	0.041	0.490	-0.060	0.650	0.173
0.900	0.022	0.580	0.038	0.580	0.078	0.750	0.390
0.960	0.039	0.640	0.202	0.650	-0.131	0.830	0.461
		0.750	0.081	0.750	0.044	0.900	0.508
		0.870	0.088	0.890	0.478	0.960	0.352
		0.930	0.040	0.930	0.383		
		0.960	-0.018	0.960	0.290		
CN =	0.344		0.709		0.763		0.872

Table J-2. Continued.

Flight 211, Wing sweep = 26°, Time = 10-36-20-000, MINF = 0.802, Camber = 0/2, ALPT = 4.05, BETA = 0.66, QINF = 605.6, RNPU = 5.0E+06, CNWP = 0.1504

η = 0.93		0.76		0.59		0.40	
			Upper Surface				
x/c	CP	*x/c*	CP	*x/c*	CP	*x/c*	CP
0.020	0.021	0.000	0.846	0.000	0.706**	0.010	-0.865
0.060	-0.114	0.020	-0.189	0.020	-0.376	0.020	-0.926
0.110	-0.179	0.040	-0.184	0.060	0.276**	0.060	-0.739
0.200	-0.197	0.060	-0.304	0.090	-0.361	0.110	-0.360
0.230	-0.251	0.090	-0.254	0.110	-0.355	0.140	-0.527
0.400	-0.179	0.130	-0.293	0.130	-2.221**	0.190	-2.221**
0.490	-0.173	0.150	-0.306	0.150	-0.375	0.250	-0.388
0.590	-0.212	0.200	-0.278	0.210	-0.427	0.400	-0.338
0.630	-0.227	0.250	-0.285	0.250	-0.354	0.490	-0.300
0.700	-0.222	0.260	-0.294	0.340	-0.335	0.580	-0.294
0.750	-0.230	0.280	-0.293	0.370	-0.337	0.650	-0.377
0.810	-0.202	0.290	-0.293	0.400	-0.294	0.700	-0.346
0.840	-0.212	0.310	-0.279	0.410	-1.023**	0.750	-0.369
0.900	-0.108	0.320	-0.293	0.430	-0.324	0.800	-0.326
0.960	0.006	0.340	-0.288	0.440	-0.313	0.830	-0.299
		0.350	-0.225**	0.460	-0.307	0.900	-0.197
		0.370	-0.274	0.490	-0.284	0.960	-0.015
		0.380	-0.280	0.500	-0.301		
		0.400	-0.251	0.520	-0.307		
		0.410	-0.270	0.540	-0.293		
		0.430	-0.256	0.550	-0.282		
		0.440	-0.252	0.580	-0.261		
		0.460	-0.261	0.600	-0.308		
		0.470	-0.274	0.610	-0.329		
		0.490	-0.269	0.650	-0.367		
		0.500	-0.258	0.700	-0.362		
		0.520	-0.261	0.750	-0.305		
		0.530	-0.257	0.820	-0.313		
		0.550	-0.271	0.890	-0.126		
		0.560	-0.284	0.900	-0.092		
		0.580	-0.250	0.960	0.028		
		0.590	-0.284				
		0.600	-0.278				
		0.640	-0.351				
		0.700	-0.298				
		0.750	-0.066**				
		0.820	-0.265				
		0.870	-0.230				
		0.930	-0.083				
		0.960	-0.018				
			Lower Surface				
0.020	-0.603	0.020	-0.395	0.020	-0.170	0.020	0.309
0.110	-0.315	0.060	-0.157	0.060	-0.073	0.060	0.043
0.230	-0.192	0.090	-0.212	0.090	-0.119	0.110	-0.089
0.400	-0.119	0.120	-0.245	0.120	-0.193	0.250	-0.310
0.490	-0.089	0.200	-0.186	0.200	-0.279	0.400	-0.285
0.630	0.912**	0.260	-0.265	0.250	-0.289	0.490	-0.291
0.750	0.028	0.400	-0.199	0.400	-0.256	0.580	-0.322
0.850	0.076	0.490	-0.194	0.490	-0.092	0.650	-0.152
0.900	0.179	0.580	-0.180	0.580	-0.257	0.750	0.118
0.960	0.171	0.640	0.006	0.650	-0.066	0.830	0.248
		0.750	0.156	0.750	-0.052	0.900	0.301
		0.870	0.236	0.890	0.295	0.960	0.257
		0.930	0.212	0.930	0.241		
		0.960	0.174	0.960	0.221		
CN =	0.104		0.187		0.191		0.267

Table J-2. Continued.

Flight 225, Wing sweep = 26°, Time = 8-48-5-000, MINF = 0.801, Camber = 0/2, ALPT = 4.00, BETA = 0.45, QINF = 602.7, RNPU = 4.9E+06, CNWP = 0.1639

η = 0.93		0.76		0.59		0.40	
			Upper Surface				
x/c	CP	*x/c*	CP	*x/c*	CP	*x/c*	CP
0.020	0.019	0.000	0.843	0.000	2.827**	0.010	-0.837
0.060	-0.093	0.020	-0.258	0.020	-0.365	0.020	-0.899
0.110	-0.167	0.040	-0.216	0.060	-0.888**	0.060	-0.693
0.200	-0.166	0.060	-0.308	0.090	-0.336	0.110	-0.325
0.230	-0.209	0.090	-0.239	0.110	-0.355	0.140	-0.514
0.400	-0.163	0.130	-0.274	0.130	-0.371	0.190	-2.227**
0.490	-0.161	0.150	-0.302	0.150	-0.371	0.250	-0.347
0.590	-0.223	0.200	-0.265	0.210	-0.420	0.400	-0.311
0.630	-0.210	0.250	-0.295	0.250	-0.308	0.490	-0.273
0.700	-0.206	0.260	-0.267	0.340	-0.316	0.580	-0.262
0.750	-0.228	0.280	-0.283	0.370	-0.333	0.650	-0.373
0.810	-0.209	0.290	-0.283	0.400	-0.316	0.700	-0.340
0.840	-0.201	0.310	-0.280	0.410	0.081**	0.750	-0.363
0.900	-0.101	0.320	-0.280	0.430	-0.320	0.800	-0.344
0.960	0.015	0.340	-0.264	0.440	-0.298	0.830	-0.303
		0.350	-0.252**	0.460	-0.301	0.900	-0.203
		0.370	-0.249	0.490	-0.254	0.960	-0.008
		0.380	-0.272	0.500	-0.307		
		0.400	-0.271	0.520	-0.279		
		0.410	-0.274	0.540	-0.287		
		0.430	-0.251	0.550	-0.254		
		0.440	-0.223	0.580	-0.256		
		0.460	-0.257	0.600	-0.294		
		0.470	-0.249	0.610	-0.313		
		0.490	-0.252	0.650	2.145**		
		0.500	-0.256	0.700	-0.375		
		0.520	-0.269	0.750	-0.348		
		0.530	-0.250	0.820	-0.321		
		0.550	-0.291	0.890	-0.137		
		0.560	-0.260	0.900	-0.082		
		0.580	-0.250	0.960	0.022		
		0.590	-0.286				
		0.600	-0.293				
		0.640	-0.350				
		0.700	-0.294				
		0.750	-0.058**				
		0.820	-0.258				
		0.870	-0.215				
		0.930	-0.086				
		0.960	-0.019				
			Lower Surface				
0.020	-0.633	0.020	-0.403	0.020	-0.165	0.020	0.232
0.110	-0.309	0.060	-0.186	0.060	-0.063	0.060	2.001**
0.230	-0.177	0.090	-0.211	0.090	0.543**	0.110	-0.145
0.400	-0.122	0.120	-0.249	0.120	-0.277	0.250	-0.297
0.490	-0.085	0.200	-0.185	0.200	-0.295	0.400	-0.270
0.630	0.921**	0.260	-0.259	0.250	-0.285	0.490	-0.297
0.750	0.044	0.400	-0.189	0.400	-0.243	0.580	-0.311
0.850	0.112	0.490	-0.188	0.490	-0.073	0.650	-0.137
0.900	0.196	0.580	-0.170	0.580	-0.229	0.750	0.114
0.960	0.175	0.640	0.023	0.650	-0.062	0.830	0.276
		0.750	0.175	0.750	-0.040	0.900	0.315
		0.870	0.258	0.890	0.283	0.960	0.270
		0.930	0.205	0.930	0.244		
		0.960	0.165	0.960	0.037**		
CN =	0.100		0.190		0.182		0.244

Table J-2. Continued.

Flight 225, Wing sweep = 26°, Time = 8-48-22-000, MINF = 0.800, Camber = 0/2, ALPT = 5.99, BETA = 0.34, QINF = 602.6, RNPU = 5.0E+06, CNWP = 0.2813

η = 0.93		0.76		0.59		0.40	
			Upper Surface				
x/c	CP	*x/c*	CP	*x/c*	CP	*x/c*	CP
0.020	-0.324	0.000	0.823	0.000	1.718**	0.010	-1.027
0.060	-0.354	0.020	-0.860	0.020	-0.950	0.020	-1.119
0.110	-0.319	0.040	-0.803	0.060	-2.004**	0.060	-1.056
0.200	-0.261	0.060	-0.870	0.090	-0.965	0.110	-0.987
0.230	-0.309	0.090	-0.800	0.110	-0.969	0.140	-1.001
0.400	-0.229	0.130	-0.834	0.130	-0.911	0.190	-2.234**
0.490	-0.210	0.150	-0.329	0.150	-0.838	0.250	-0.363
0.590	-0.255	0.200	-0.306	0.210	-0.846	0.400	-0.352
0.630	-0.243	0.250	-0.388	0.250	-0.300	0.490	-0.323
0.700	-0.228	0.260	-0.374	0.340	-0.371	0.580	-0.318
0.750	-0.250	0.280	-0.389	0.370	-0.387	0.650	-0.400
0.810	-0.231	0.290	-0.378	0.400	-0.366	0.700	-0.380
0.840	-0.222	0.310	-0.368	0.410	-1.029**	0.750	-0.380
0.900	-0.131	0.320	-0.360	0.430	-0.372	0.800	-0.336
0.960	-0.020	0.340	-0.348	0.440	-0.357	0.830	-0.314
		0.350	-0.230**	0.460	-0.360	0.900	-0.184
		0.370	-0.324	0.490	-0.302	0.960	-0.001
		0.380	-0.349	0.500	-0.355		
		0.400	-0.286	0.520	-0.328		
		0.410	-0.333	0.540	-0.333		
		0.430	-0.309	0.550	-0.302		
		0.440	-0.268	0.580	-0.306		
		0.460	-0.315	0.600	-0.341		
		0.470	-0.312	0.610	-0.359		
		0.490	-0.304	0.650	2.140**		
		0.500	-0.301	0.700	-0.430		
		0.520	-0.311	0.750	-0.376		
		0.530	-0.299	0.820	-0.332		
		0.550	-0.328	0.890	-0.134		
		0.560	-0.321	0.900	-0.086		
		0.580	-0.299	0.960	0.025		
		0.590	-0.331				
		0.600	-0.329				
		0.640	-0.388				
		0.700	-0.328				
		0.750	-0.051**				
		0.820	-0.285				
		0.870	-0.229				
		0.930	-0.098				
		0.960	-0.031				
			Lower Surface				
0.020	-0.119	0.020	0.056	0.020	0.169	0.020	0.466
0.110	-0.170	0.060	0.041	0.060	0.135	0.060	1.996**
0.230	-0.050	0.090	-0.021	0.090	0.537**	0.110	0.017
0.400	-0.067	0.120	-0.074	0.120	-0.120	0.250	-0.172
0.490	-0.061	0.200	-0.083	0.200	-0.134	0.400	-0.176
0.630	0.915**	0.260	-0.152	0.250	-0.153	0.490	-0.223
0.750	0.017	0.400	-0.131	0.400	-0.161	0.580	-0.255
0.850	0.083	0.490	-0.147	0.490	-0.057	0.650	-0.106
0.900	0.168	0.580	-0.143	0.580	-0.184	0.750	0.134
0.960	0.150	0.640	0.037	0.650	-0.057	0.830	0.292
		0.750	0.183	0.750	-0.039	0.900	0.325
		0.870	0.259	0.890	0.292	0.960	0.269
		0.930	0.210	0.930	0.245		
		0.960	0.168	0.960	0.031**		
CN =	0.205		0.362		0.374		0.417

Table J-2. Continued.

Flight 223, Wing sweep = 26°, Time = 8-59-41-500, MINF = 0.797, Camber = 0/2, ALPT = 4.07, BETA = 1.09, QINF = 591.4, RNPU = 4.9E+06, CNWP = 0.1505

η = 0.93		0.76		0.59		0.40	
			Upper Surface				
x/c	CP	*x/c*	CP	*x/c*	CP	*x/c*	CP
0.020	0.003	0.000	0.850	0.000	1.778**	0.010	-0.868
0.060	-0.120	0.020	-0.197	0.020	-0.413	0.020	-0.909
0.110	-0.251	0.040	-0.241	0.060	-2.001**	0.060	-0.696
0.200	-0.179	0.060	-0.307	0.090	-0.330	0.110	-0.332
0.230	-0.195	0.090	-0.244	0.110	-0.348	0.140	-0.498
0.400	-0.171	0.130	-0.276	0.130	-0.385	0.190	-2.249**
0.490	-0.171	0.150	-0.296	0.150	-0.353	0.250	-0.372
0.590	-0.217	0.200	-0.273	0.210	-0.417	0.400	-0.325
0.630	-0.210	0.250	-0.288	0.250	-0.333	0.490	-0.284
0.700	-0.219	0.260	-0.283	0.340	-0.331	0.580	-0.262
0.750	-0.223	0.280	-0.290	0.370	-0.333	0.650	-0.373
0.810	-0.199	0.290	-0.290	0.400	-0.304	0.700	-0.347
0.840	-0.201	0.310	-0.281	0.410	-2.754**	0.750	-0.356
0.900	-0.103	0.320	-0.288	0.430	-0.320	0.800	-0.316**
0.960	0.014	0.340	-0.277	0.440	-0.308	0.830	-0.308
		0.350	-0.236**	0.460	-0.307	0.900	-0.203
		0.370	-0.263	0.490	-0.275	0.960	-0.011
		0.380	-0.281	0.500	-0.302		
		0.400	-0.238	0.520	-0.294		
		0.410	-0.266	0.540	-0.293		
		0.430	-0.247	0.550	-0.260		
		0.440	-0.236	0.580	-0.226		
		0.460	-0.254	0.600	-0.307		
		0.470	-0.264	0.610	-0.320		
		0.490	-0.258	0.650	1.083**		
		0.500	-0.256	0.700	-0.364		
		0.520	-0.251	0.750	-0.316		
		0.530	-0.252	0.820	-0.309**		
		0.550	-0.276	0.890	-0.127		
		0.560	-0.279	0.900	-0.084		
		0.580	-0.253	0.960	0.022		
		0.590	-0.289				
		0.600	-0.278				
		0.640	-0.343				
		0.700	-0.293				
		0.750	-0.065**				
		0.820	-0.256				
		0.870	-0.233				
		0.930	-0.085				
		0.960	-0.022				
			Lower Surface				
0.020	-0.569	0.020	-0.348	0.020	-0.138	0.020	0.332
0.110	-0.306	0.060	-0.174	0.060	-0.051	0.060	0.936**
0.230	-0.168	0.090	-0.192	0.090	0.589**	0.110	-0.128
0.400	-0.107	0.120	-0.240	0.120	-0.185	0.250	-0.297
0.490	-0.093	0.200	-0.181	0.200	-0.268	0.400	-0.269
0.630	0.938**	0.260	-0.245	0.250	-0.284	0.490	-0.286
0.750	0.025	0.400	-0.193	0.400	-0.243	0.580	-0.313
0.850	0.094	0.490	-0.190	0.490	-0.082	0.650	-0.140
0.900	0.183	0.580	-0.180	0.580	-0.238	0.750	0.108
0.960	0.174	0.640	0.005	0.650	-0.067	0.830	0.266
		0.750	0.165	0.750	-0.045	0.900	0.303
		0.870	0.244	0.890	0.281	0.960	0.260
		0.930	0.208	0.930	0.233		
		0.960	0.167	0.960	-1.058**		
CN =	0.105		0.188		0.178		0.250

Table J-2. Continued.

Flight 223, Wing sweep = 26°, Time = 8-59-54-500, MINF = 0.803, Camber = 0/2, ALPT = 5.10, BETA = 0.77, QINF = 601.9, RNPU = 4.9E+06, CNWP = 0.2200

η = 0.93		0.76		0.59		0.40	
			Upper Surface				
x/c	CP	*x/c*	CP	*x/c*	CP	*x/c*	CP
0.020	-0.191	0.000	0.861	0.000	1.741**	0.010	-0.821
0.060	-0.243	0.020	-0.560	0.020	-0.536	0.020	-1.027
0.110	-0.245	0.040	-0.463	0.060	-1.972**	0.060	-0.940
0.200	-0.225	0.060	-0.493	0.090	-0.819	0.110	-0.857
0.230	-0.264	0.090	-0.383	0.110	-0.431	0.140	-0.852
0.400	-0.197	0.130	-0.381	0.130	-0.341	0.190	-2.216**
0.490	-0.191	0.150	-0.377	0.150	-0.366	0.250	-0.350
0.590	-0.248	0.200	-0.349	0.210	-0.481	0.400	-0.353
0.630	-0.228	0.250	-0.351	0.250	-0.387	0.490	-0.310
0.700	-0.233	0.260	-0.342	0.340	-0.376	0.580	-0.303
0.750	-0.235	0.280	-0.344	0.370	-0.376	0.650	-0.396
0.810	-0.212	0.290	-0.340	0.400	-0.338	0.700	-0.373
0.840	-0.215	0.310	-0.327	0.410	-2.712**	0.750	-0.370
0.900	-0.113	0.320	-0.337	0.430	-0.358	0.800	-0.316**
0.960	0.008	0.340	-0.322	0.440	-0.343	0.830	-0.303
		0.350	-0.223**	0.460	-0.337	0.900	-0.189
		0.370	-0.298	0.490	-0.303	0.960	-0.009
		0.380	-0.323	0.500	-0.335		
		0.400	-0.271	0.520	-0.329		
		0.410	-0.306	0.540	-0.320		
		0.430	-0.283	0.550	-0.285		
		0.440	-0.266	0.580	-0.281		
		0.460	-0.288	0.600	-0.337		
		0.470	-0.291	0.610	-0.353		
		0.490	-0.291	0.650	1.058**		
		0.500	-0.289	0.700	-0.386		
		0.520	-0.288	0.750	-0.333		
		0.530	-0.277	0.820	-0.319**		
		0.550	-0.306	0.890	-0.127		
		0.560	-0.303	0.900	-0.088		
		0.580	-0.284	0.960	0.019		
		0.590	-0.314				
		0.600	-0.306				
		0.640	-0.377				
		0.700	-0.321				
		0.750	-0.059**				
		0.820	-0.280				
		0.870	-0.242				
		0.930	-0.086				
		0.960	-0.022				
			Lower Surface				
0.020	-0.291	0.020	-0.117	0.020	0.036	0.020	0.440
0.110	-0.244	0.060	-0.057	0.060	0.042	0.060	0.914**
0.230	-0.077	0.090	-0.092	0.090	0.572**	0.110	-0.054
0.400	-0.087	0.120	-0.157	0.120	-0.104	0.250	-0.232
0.490	-0.077	0.200	-0.145	0.200	-0.188	0.400	-0.220
0.630	0.915**	0.260	-0.193	0.250	-0.217	0.490	-0.250
0.750	0.026	0.400	-0.169	0.400	-0.203	0.580	-0.286
0.850	0.090	0.490	-0.172	0.490	-0.073	0.650	-0.121
0.900	0.178	0.580	-0.170	0.580	-0.211	0.750	0.126
0.960	0.168	0.640	0.025	0.650	-0.063	0.830	0.283
		0.750	0.169	0.750	-0.040	0.900	0.312
		0.870	0.250	0.890	0.288	0.960	0.271
		0.930	0.215	0.930	0.244		
		0.960	0.173	0.960	-1.046**		
CN =	0.160		0.272		0.284		0.356

Table J-2. Continued.

Flight 223, Wing sweep = 26°, Time = 9-0-1-000, MINF = 0.808, Camber = 0/2, ALPT = 6.03, BETA = 0.86, QINF = 610.7, RNPU = 5.0E+06, CNWP = 0.2402

η = 0.93		0.76		0.59		0.40	
			Upper Surface				
x/c	CP	*x/c*	CP	*x/c*	CP	*x/c*	CP
0.020	-0.699	0.000	0.823	0.000	1.713**	0.010	-1.068
0.060	-0.302	0.020	-0.844	0.020	-0.922	0.020	-1.080
0.110	-0.307	0.040	-0.791	0.060	-1.947**	0.060	-1.046
0.200	-0.268	0.060	-0.847	0.090	-0.956	0.110	-0.949
0.230	-0.327	0.090	-0.789	0.110	-0.938	0.140	-0.956
0.400	-0.226	0.130	-0.827	0.130	-0.903	0.190	-2.187**
0.490	-0.214	0.150	-0.788	0.150	-0.810	0.250	-0.570
0.590	-0.257	0.200	-0.328	0.210	-0.836	0.400	-0.334
0.630	-0.247	0.250	-0.325	0.250	-0.324	0.490	-0.314
0.700	-0.244	0.260	-0.333	0.340	-0.330	0.580	-0.312
0.750	-0.247	0.280	-0.347	0.370	-0.355	0.650	-0.404
0.810	-0.216	0.290	-0.344	0.400	-0.333	0.700	-0.379
0.840	-0.226	0.310	-0.342	0.410	-2.676**	0.750	-0.375
0.900	-0.132	0.320	-0.351	0.430	-0.363	0.800	-0.311**
0.960	-0.013	0.340	-0.344	0.440	-0.351	0.830	-0.298
		0.350	-0.212**	0.460	-0.349	0.900	-0.170
		0.370	-0.320	0.490	-0.346	0.960	0.003
		0.380	-0.341	0.500	-0.345		
		0.400	-0.297	0.520	-0.336		
		0.410	-0.325	0.540	-0.332		
		0.430	-0.298	0.550	-0.302		
		0.440	-0.287	0.580	-0.290		
		0.460	-0.309	0.600	-0.352		
		0.470	-0.318	0.610	-0.358		
		0.490	-0.306	0.650	1.040**		
		0.500	-0.306	0.700	-0.401		
		0.520	-0.303	0.750	-0.342		
		0.530	-0.297	0.820	-0.322**		
		0.550	-0.327	0.890	-0.127		
		0.560	-0.326	0.900	-0.085		
		0.580	-0.296	0.960	0.021		
		0.590	-0.337				
		0.600	-0.331				
		0.640	-0.387				
		0.700	-0.325				
		0.750	-0.061**				
		0.820	-0.283				
		0.870	-0.244				
		0.930	-0.088				
		0.960	-0.027				
			Lower Surface				
0.020	-0.097	0.020	0.046	0.020	0.170	0.020	0.465
0.110	-0.181	0.060	0.040	0.060	0.110	0.060	0.898**
0.230	-0.055	0.090	-0.016	0.090	0.561**	0.110	0.023
0.400	-0.081	0.120	-0.084	0.120	-0.051	0.250	-0.183
0.490	-0.075	0.200	-0.096	0.200	-0.126	0.400	-0.184
0.630	0.899**	0.260	-0.151	0.250	-0.170	0.490	-0.220
0.750	0.015	0.400	-0.145	0.400	-0.179	0.580	-0.270
0.850	0.072	0.490	-0.155	0.490	-0.071	0.650	-0.112
0.900	0.160	0.580	-0.158	0.580	-0.203	0.750	0.133
0.960	0.150	0.640	0.023	0.650	-0.064	0.830	0.285
		0.750	0.170	0.750	-0.044	0.900	0.320
		0.870	0.243	0.890	0.293	0.960	0.264
		0.930	0.209	0.930	0.241		
		0.960	0.165	0.960	-1.034**		
CN =	0.196		0.364		0.352		0.426

Table J-2. Continued.

Flight 223, Wing sweep = 26°, Time = 9-0-7-000, MINF = 0.806, Camber = 0/2, ALPT = 7.06, BETA = 0.86, QINF = 606.9, RNPU = 5.0E+06, CNWP = 0.2613

η = 0.93		0.76		0.59		0.40	
			Upper Surface				
x/c	CP	*x/c*	CP	*x/c*	CP	*x/c*	CP
0.020	-0.934	0.000	0.765	0.000	1.726**	0.010	-1.103
0.060	-0.856	0.020	-0.989	0.020	-1.056	0.020	-1.218
0.110	-0.796	0.040	-0.882	0.060	-1.956**	0.060	-1.177
0.200	-0.247	0.060	-0.980	0.090	-1.087	0.110	-1.062
0.230	-0.317	0.090	-0.978	0.110	-1.059	0.140	-1.058
0.400	-0.240	0.130	-0.873	0.130	-1.056	0.190	-2.198**
0.490	-0.222	0.150	-0.979	0.150	-0.955	0.250	-1.082
0.590	-0.264	0.200	-0.889	0.210	-0.972	0.400	-0.323
0.630	-0.256	0.250	-0.900	0.250	-0.951	0.490	-0.283
0.700	-0.248	0.260	-0.908	0.340	-0.374	0.580	-0.284
0.750	-0.263	0.280	-0.455	0.370	-0.282	0.650	-0.366
0.810	-0.232	0.290	-0.283	0.400	-0.234	0.700	-0.341
0.840	-0.233	0.310	-0.227	0.410	-2.690**	0.750	-0.339
0.900	-0.150	0.320	-0.219	0.430	-0.252	0.800	-0.276**
0.960	-0.033	0.340	-0.202	0.440	-0.247	0.830	-0.265
		0.350	-0.130**	0.460	-0.256	0.900	-0.124
		0.370	-0.202	0.490	-0.238	0.960	0.011
		0.380	-0.232	0.500	-0.284		
		0.400	-0.208	0.520	-0.286		
		0.410	-0.244	0.540	-0.278		
		0.430	-0.233	0.550	-0.258		
		0.440	-0.233	0.580	-0.256		
		0.460	-0.262	0.600	-0.309		
		0.470	-0.269	0.610	-0.317		
		0.490	-0.271	0.650	1.049**		
		0.500	-0.274	0.700	-0.363		
		0.520	-0.276	0.750	-0.324		
		0.530	-0.272	0.820	-0.306**		
		0.550	-0.301	0.890	-0.123		
		0.560	-0.304	0.900	-0.079		
		0.580	-0.278	0.960	0.016		
		0.590	-0.334				
		0.600	-0.306				
		0.640	-0.370				
		0.700	-0.325				
		0.750	-0.049**				
		0.820	-0.277				
		0.870	-0.239				
		0.930	-0.088				
		0.960	-0.028				
			Lower Surface				
0.020	0.035	0.020	0.186	0.020	0.273	0.020	0.611
0.110	-0.127	0.060	0.132	0.060	0.211	0.060	0.906**
0.230	-0.021	0.090	0.065	0.090	0.567**	0.110	0.103
0.400	-0.061	0.120	-0.010	0.120	0.018	0.250	-0.119
0.490	-0.055	0.200	-0.035	0.200	-0.029	0.400	-0.137
0.630	0.907**	0.260	-0.092	0.250	-0.111	0.490	-0.179
0.750	0.013	0.400	-0.104	0.400	-0.132	0.580	-0.233
0.850	0.063	0.490	-0.134	0.490	-0.062	0.650	-0.092
0.900	0.148	0.580	-0.136	0.580	-0.181	0.750	0.148
0.960	0.138	0.640	0.039	0.650	-0.058	0.830	0.289
		0.750	0.189	0.750	-0.040	0.900	0.325
		0.870	0.254	0.890	0.299	0.960	0.264
		0.930	0.211	0.930	0.249		
		0.960	0.167	0.960	-1.038**		
CN =	0.285		0.454		0.435		0.536

Table J-2. Continued.

Flight 223, Wing sweep = 26°, Time = 9-0-16-500, MINF = 0.801, Camber = 0/2, ALPT = 8.05, BETA = 0.80, QINF = 602.8, RNPU = 4.9E+06, CNWP = 0.3377

η = 0.93		0.76		0.59		0.40	
			Upper Surface				
x/c	CP	*x/c*	CP	*x/c*	CP	*x/c*	CP
0.020	-1.081	0.000	0.674	0.000	1.723**	0.010	-1.257
0.060	-1.064	0.020	-1.133	0.020	-1.185	0.020	-1.338
0.110	-1.005	0.040	-0.972	0.060	-1.985**	0.060	-1.286
0.200	-0.367	0.060	-1.112	0.090	-1.210	0.110	-1.212
0.230	-0.271	0.090	-1.119	0.110	-1.174	0.140	-1.221
0.400	-0.236	0.130	-0.894	0.130	-1.174	0.190	-2.228**
0.490	-0.227	0.150	-1.076	0.150	-1.074	0.250	-1.214
0.590	-0.268	0.200	-1.026	0.210	-1.099	0.400	-0.467
0.630	-0.269	0.250	-1.038	0.250	-0.973	0.490	-0.285
0.700	-0.265	0.260	-1.047	0.340	-1.157	0.580	-0.260
0.750	-0.275	0.280	-1.069	0.370	-0.645	0.650	-0.315
0.810	-0.246	0.290	-1.074	0.400	-0.472	0.700	-0.302
0.840	-0.258	0.310	-0.845	0.410	-2.724**	0.750	-0.281
0.900	-0.189	0.320	-1.035	0.430	-0.390	0.800	-0.230**
0.960	-0.060	0.340	-0.519	0.440	-0.333	0.830	-0.206
		0.350	-0.229**	0.460	-0.289	0.900	-0.100
		0.370	-0.316	0.490	-0.215	0.960	-0.010
		0.380	-0.289	0.500	-0.224		
		0.400	-0.202	0.520	-0.217		
		0.410	-0.192	0.540	-0.212		
		0.430	-0.164	0.550	-0.191		
		0.440	-0.177	0.580	-0.192		
		0.460	-0.166	0.600	-0.238		
		0.470	-0.184	0.610	-0.246		
		0.490	-0.185	0.650	1.041**		
		0.500	-0.217	0.700	-0.298		
		0.520	-0.199	0.750	-0.274		
		0.530	-0.209	0.820	-0.259**		
		0.550	-0.241	0.890	-0.103		
		0.560	-0.246	0.900	-0.069		
		0.580	-0.223	0.960	0.023		
		0.590	-0.272				
		0.600	-0.261				
		0.640	-0.323				
		0.700	-0.294				
		0.750	-0.037**				
		0.820	-0.264				
		0.870	-0.231				
		0.930	-0.086				
		0.960	-0.035				
			Lower Surface				
0.020	0.112	0.020	0.315	0.020	0.381	0.020	0.685
0.110	-0.071	0.060	0.209	0.060	0.266	0.060	0.897**
0.230	-0.012	0.090	0.131	0.090	0.556**	0.110	0.157
0.400	-0.048	0.120	0.047	0.120	0.082	0.250	-0.064
0.490	-0.053	0.200	0.016	0.200	0.059	0.400	-0.094
0.630	0.898**	0.260	-0.044	0.250	-0.048	0.490	-0.141
0.750	0.005	0.400	-0.079	0.400	-0.092	0.580	-0.201
0.850	0.054	0.490	-0.105	0.490	-0.038	0.650	-0.072
0.900	0.131	0.580	-0.118	0.580	-0.151	0.750	0.153
0.960	0.124	0.640	0.047	0.650	-0.038	0.830	0.299
		0.750	0.179	0.750	-0.016	0.900	0.326
		0.870	0.251	0.890	0.298	0.960	0.256
		0.930	0.204	0.930	0.245		
		0.960	0.161	0.960	-1.060**		
CN =	0.331		0.541		0.541		0.613

Table J-2. Continued.

Flight 223, Wing sweep = 26°, Time = 9-0-22-500, MINF = 0.807, Camber = 0/2, ALPT = 8.09, BETA = 0.74, QINF = 623.8, RNPU = 5.1E+06, CNWP = 0.3411

η = 0.93		0.76		0.59		0.40	
			Upper Surface				
x/c	CP	*x/c*	CP	*x/c*	CP	*x/c*	CP
0.020	-1.078	0.000	0.676	0.000	1.625**	0.010	-1.243
0.060	-1.053	0.020	-1.130	0.020	-1.170	0.020	-1.321
0.110	-1.014	0.040	-0.979	0.060	-1.957**	0.060	-1.282
0.200	-0.775	0.060	-1.110	0.090	-1.193	0.110	-1.212
0.230	-0.625	0.090	-1.116	0.110	-1.170	0.140	-1.229
0.400	-0.219	0.130	-0.903	0.130	-1.172	0.190	-2.192**
0.490	-0.220	0.150	-1.079	0.150	-1.072	0.250	-1.214
0.590	-0.259	0.200	-1.022	0.210	-1.098	0.400	-0.754
0.630	-0.262	0.250	-1.041	0.250	-0.979	0.490	-0.315
0.700	-0.258	0.260	-1.045	0.340	-1.160	0.580	-0.262
0.750	-0.270	0.280	-1.065	0.370	-1.157	0.650	-0.298
0.810	-0.243	0.290	-1.082	0.400	-0.724	0.700	-0.287
0.840	-0.260	0.310	-0.856	0.410	-2.671**	0.750	-0.265
0.900	-0.183	0.320	-1.059	0.430	-0.509	0.800	-0.217**
0.960	-0.062	0.340	-0.895	0.440	-0.459	0.830	-0.189
		0.350	-0.495**	0.460	-0.416	0.900	-0.090
		0.370	-0.592	0.490	-0.326	0.960	-0.008
		0.380	-0.473	0.500	-0.300		
		0.400	-0.357	0.520	-0.273		
		0.410	-0.320	0.540	-0.236		
		0.430	-0.251	0.550	-0.189		
		0.440	-0.206	0.580	-0.168		
		0.460	-0.182	0.600	-0.200		
		0.470	-0.154	0.610	-0.204		
		0.490	-0.148	0.650	0.966**		
		0.500	-0.150	0.700	-0.249		
		0.520	-0.149	0.750	-0.245		
		0.530	-0.156	0.820	-0.236**		
		0.550	-0.187	0.890	-0.090		
		0.560	-0.200	0.900	-0.060		
		0.580	-0.189	0.960	0.030		
		0.590	-0.227				
		0.600	-0.225				
		0.640	-0.285				
		0.700	-0.267				
		0.750	-0.033**				
		0.820	-0.257				
		0.870	-0.220				
		0.930	-0.076				
		0.960	-0.024				
			Lower Surface				
0.020	0.185	0.020	0.335	0.020	0.393	0.020	0.697
0.110	-0.067	0.060	0.215	0.060	0.265	0.060	0.862**
0.230	-0.024	0.090	0.142	0.090	0.498**	0.110	0.163
0.400	-0.049	0.120	0.059	0.120	0.089	0.250	-0.058
0.490	-0.046	0.200	0.024	0.200	0.056	0.400	-0.087
0.630	0.829**	0.260	-0.040	0.250	-0.041	0.490	-0.142
0.750	0.009	0.400	-0.072	0.400	-0.085	0.580	-0.209
0.850	0.052	0.490	-0.102	0.490	-0.042	0.650	-0.071
0.900	0.136	0.580	-0.114	0.580	-0.144	0.750	0.154
0.960	0.123	0.640	0.047	0.650	-0.035	0.830	0.302
		0.750	0.183	0.750	-0.016	0.900	0.331
		0.870	0.244	0.890	0.302	0.960	0.257
		0.930	0.205	0.930	0.250		
		0.960	0.163	0.960	-1.029**		
CN =	0.380		0.556		0.566		0.649

Table J-2. Continued.

Flight 223, Wing sweep = 26°, Time = 9-0-30-000, MINF = 0.800, Camber = 0/2, ALPT = 9.03, BETA = 0.69, QINF = 618.6, RNPU = 5.1E+06, CNWP = 0.4026

η = 0.93		0.76		0.59		0.40	
			Upper Surface				
x/c	CP	*x/c*	CP	*x/c*	CP	*x/c*	CP
0.020	-1.217	0.000	0.590	0.000	1.615**	0.010	-1.358
0.060	-1.174	0.020	-1.244	0.020	-1.310	0.020	-1.426
0.110	-1.132	0.040	-1.011	0.060	-1.998**	0.060	-1.407
0.200	-0.878	0.060	-1.245	0.090	-1.294	0.110	-1.333
0.230	-0.785	0.090	-1.150	0.110	-1.282	0.140	-1.352
0.400	-0.215	0.130	-0.935	0.130	-1.291	0.190	-2.235**
0.490	-0.222	0.150	-1.112	0.150	-1.175	0.250	-1.314
0.590	-0.274	0.200	-1.112	0.210	-1.162	0.400	-0.769
0.630	-0.276	0.250	-1.152	0.250	-1.011	0.490	-0.380
0.700	-0.274	0.260	-1.154	0.340	-1.262	0.580	-0.265
0.750	-0.282	0.280	-1.112	0.370	-1.249	0.650	-0.281
0.810	-0.255	0.290	-1.119	0.400	-0.699	0.700	-0.270
0.840	-0.272	0.310	-0.887	0.410	-2.718**	0.750	-0.237
0.900	-0.210	0.320	-1.122	0.430	-0.602	0.800	-0.185**
0.960	-0.088	0.340	-0.927	0.440	-0.575	0.830	-0.166
		0.350	-0.525**	0.460	-0.555	0.900	-0.084
		0.370	-0.739	0.490	-0.494	0.960	-0.011
		0.380	-0.598	0.500	-0.488		
		0.400	-0.500	0.520	-0.462		
		0.410	-0.483	0.540	-0.425		
		0.430	-0.431	0.550	-0.363		
		0.440	-0.408	0.580	-0.280		
		0.460	-0.349	0.600	-0.300		
		0.470	-0.317	0.610	-0.259		
		0.490	-0.258	0.650	0.951**		
		0.500	-0.246	0.700	-0.216		
		0.520	-0.194	0.750	-0.210		
		0.530	-0.174	0.820	-0.184**		
		0.550	-0.184	0.890	-0.069		
		0.560	-0.178	0.900	-0.047		
		0.580	-0.159	0.960	0.028		
		0.590	-0.192				
		0.600	-0.190				
		0.640	-0.235				
		0.700	-0.241				
		0.750	-0.012**				
		0.820	-0.229				
		0.870	-0.206				
		0.930	-0.079				
		0.960	-0.024				
			Lower Surface				
0.020	0.232	0.020	0.411	0.020	0.459	0.020	0.749
0.110	-0.025	0.060	0.276	0.060	0.330	0.060	0.845**
0.230	-0.015	0.090	0.199	0.090	0.478**	0.110	0.221
0.400	-0.036	0.120	0.110	0.120	0.137	0.250	-0.015
0.490	-0.040	0.200	0.063	0.200	0.093	0.400	-0.053
0.630	0.915**	0.260	0.003	0.250	0.004	0.490	-0.107
0.750	0.009	0.400	-0.048	0.400	-0.050	0.580	-0.165
0.850	0.044	0.490	-0.076	0.490	-0.018	0.650	-0.055
0.900	0.125	0.580	-0.094	0.580	-0.121	0.750	0.164
0.960	0.116	0.640	0.064	0.650	-0.018	0.830	0.302
		0.750	0.188	0.750	0.021	0.900	0.328
		0.870	0.248	0.890	0.297	0.960	0.255
		0.930	0.207	0.930	0.240		
		0.960	0.155	0.960	-1.062**		
CN =	0.438		0.616		0.644		0.713

Table J-2. Continued.

Flight 223, Wing sweep = 26°, Time = 9-0-35-500, MINF = 0.795, Camber = 0/2, ALPT = 10.00, BETA = 0.74, QINF = 613.8, RNPU = 5.1E+06, CNWP = 0.3760

η = 0.93		0.76		0.59		0.40	
			Upper Surface				
x/c	CP	*x/c*	CP	*x/c*	CP	*x/c*	CP
0.020	-1.327	0.000	0.488	0.000	1.619**	0.010	-1.487
0.060	-1.300	0.020	-1.370	0.020	-1.417	0.020	-1.520
0.110	-1.230	0.040	-1.027	0.060	-2.022**	0.060	-1.500
0.200	-0.988	0.060	-1.349	0.090	-1.306	0.110	-1.419
0.230	-0.887	0.090	-1.167	0.110	-1.360	0.140	-1.447
0.400	-0.226	0.130	-0.950	0.130	-1.391	0.190	-2.261**
0.490	-0.249	0.150	-1.129	0.150	-1.254	0.250	-1.414
0.590	-0.292	0.200	-1.126	0.210	-1.180	0.400	-0.763
0.630	-0.293	0.250	-1.235	0.250	-1.028	0.490	-0.435
0.700	-0.286	0.260	-1.147	0.340	-0.804	0.580	-0.280
0.750	-0.291	0.280	-0.922	0.370	-0.713	0.650	-0.251
0.810	-0.266	0.290	-0.756	0.400	-0.663	0.700	-0.225
0.840	-0.287	0.310	-0.700	0.410	-2.747**	0.750	-0.182
0.900	-0.224	0.320	-0.708	0.430	-0.660	0.800	-0.170**
0.960	-0.104	0.340	-0.697	0.440	-0.641	0.830	-0.150
		0.350	-0.329**	0.460	-0.629	0.900	-0.099
		0.370	-0.648	0.490	-0.593	0.960	-0.054
		0.380	-0.677	0.500	-0.590		
		0.400	-0.615	0.520	-0.578		
		0.410	-0.607	0.540	-0.555		
		0.430	-0.574	0.550	-0.515		
		0.440	-0.556	0.580	-0.497		
		0.460	-0.543	0.600	-0.477		
		0.470	-0.518	0.610	-0.439		
		0.490	-0.472	0.650	0.950**		
		0.500	-0.475	0.700	-0.331		
		0.520	-0.429	0.750	-0.299		
		0.530	-0.422	0.820	-0.195**		
		0.550	-0.393	0.890	-0.086		
		0.560	-0.375	0.900	-0.079		
		0.580	-0.340	0.960	-0.018		
		0.590	-0.361				
		0.600	-0.309				
		0.640	-0.250				
		0.700	-0.232				
		0.750	-0.005**				
		0.820	-0.176				
		0.870	-0.137				
		0.930	-0.082				
		0.960	-0.062				
			Lower Surface				
0.020	0.319	0.020	0.478	0.020	0.535	0.020	0.752
0.110	0.014	0.060	0.331	0.060	0.377	0.060	0.843**
0.230	0.003	0.090	0.244	0.090	0.474**	0.110	0.272
0.400	-0.032	0.120	0.152	0.120	0.197	0.250	0.033
0.490	-0.039	0.200	0.104	0.200	0.127	0.400	-0.016
0.630	0.950**	0.260	0.036	0.250	0.041	0.490	-0.074
0.750	0.003	0.400	-0.020	0.400	-0.025	0.580	-0.144
0.850	0.039	0.490	-0.065	0.490	0.001	0.650	-0.039
0.900	0.120	0.580	-0.094	0.580	-0.106	0.750	0.170
0.960	0.103	0.640	0.057	0.650	-0.002	0.830	0.303
		0.750	0.174	0.750	0.025	0.900	0.324
		0.870	0.231	0.890	0.287	0.960	0.226
		0.930	0.164	0.930	0.225		
		0.960	0.111	0.960	-1.079**		
CN =	0.483		0.648		0.677		0.766

Table J-2. Continued.

Flight 211, Wing sweep = 26°, Time = 10-31-44-000, MINF = 0.796, Camber = 10/2, ALPT = 4.13, BETA = 0.63, QINF = 595.1, RNPU = 4.9E+06, CNWP = 0.2126

η = 0.93		0.76		0.59		0.40	
			Upper Surface				
x/c	CP	*x/c*	CP	*x/c*	CP	*x/c*	CP
0.020	0.588	0.000	0.055	0.000	0.466**	0.010	0.399
0.060	0.102	0.020	0.586	0.020	0.570	0.020	0.228
0.110	-0.282	0.040	0.355	0.060	0.609**	0.060	-0.304
0.200	-0.315	0.060	-0.008	0.090	-0.304	0.110	-0.672
0.230	-0.334	0.090	-0.252	0.110	-0.529	0.140	-1.115
0.400	-0.199	0.130	-0.546	0.130	-2.256**	0.190	-2.256**
0.490	-0.184	0.150	-0.833	0.150	-0.973	0.250	-0.365
0.590	-0.217	0.200	-0.918	0.210	-0.977	0.400	-0.336
0.630	-0.222	0.250	-0.329	0.250	-0.323	0.490	-0.293
0.700	-0.221	0.260	-0.332	0.340	-0.336	0.580	-0.295
0.750	-0.231	0.280	-0.341	0.370	-0.346	0.650	-0.378
0.810	-0.211	0.290	-0.337	0.400	-0.309	0.700	-0.352
0.840	-0.218	0.310	-0.321	0.410	-1.036**	0.750	-0.363
0.900	-0.122	0.320	-0.332	0.430	-0.332	0.800	-0.330
0.960	-0.006	0.340	-0.319	0.440	-0.324	0.830	-0.304
		0.350	-0.199**	0.460	-0.320	0.900	-0.200
		0.370	-0.305	0.490	-0.299	0.960	-0.015
		0.380	-0.312	0.500	-0.315		
		0.400	-0.278	0.520	-0.309		
		0.410	-0.294	0.540	-0.303		
		0.430	-0.272	0.550	-0.287		
		0.440	-0.267	0.580	-0.287		
		0.460	-0.277	0.600	-0.315		
		0.470	-0.290	0.610	-0.330		
		0.490	-0.282	0.650	-0.358		
		0.500	-0.274	0.700	-0.365		
		0.520	-0.273	0.750	-0.317		
		0.530	-0.271	0.820	-0.320		
		0.550	-0.293	0.890	-0.132		
		0.560	-0.290	0.900	-0.097		
		0.580	-0.260	0.960	0.019		
		0.590	-0.295				
		0.600	-0.287				
		0.640	-0.355				
		0.700	-0.305				
		0.750	-0.062**				
		0.820	-0.271				
		0.870	-0.234				
		0.930	-0.093				
		0.960	-0.026				
			Lower Surface				
0.020	-0.995	0.020	-0.648	0.020	-0.850	0.020	-0.864
0.110	-0.396	0.060	-0.533	0.060	-0.680	0.060	-0.030
0.230	-0.116	0.090	-0.497	0.090	-0.487	0.110	-0.292
0.400	-0.069	0.120	-0.394	0.120	-0.331	0.250	-0.234
0.490	-0.045	0.200	-0.116	0.200	-0.109	0.400	-0.256
0.630	0.926**	0.260	-0.235	0.250	-0.150	0.490	-0.276
0.750	0.027	0.400	-0.127	0.400	-0.199	0.580	-0.308
0.850	0.059	0.490	-0.110	0.490	-0.085	0.650	-0.153
0.900	0.134	0.580	-0.092	0.580	-0.199	0.750	0.113
0.960	0.135	0.640	0.019	0.650	-0.066	0.830	0.242
		0.750	0.106	0.750	-0.041	0.900	0.293
		0.870	0.167	0.890	0.272	0.960	0.252
		0.930	0.175	0.930	0.221		
		0.960	0.149	0.960	0.209		
CN =	0.127		0.203		0.230		0.259

Table J-2. Continued.

Flight 211, Wing sweep = 26°, Time = 10-32-11-500, MINF = 0.800, Camber = 10/2, ALPT = 5.00, BETA = 0.28, QINF = 597.9, RNPU = 4.9E+06, CNWP = 0.2623

η = 0.93		0.76		0.59		0.40	
			Upper Surface				
x/c	CP	*x/c*	CP	*x/c*	CP	*x/c*	CP
0.020	0.536	0.000	0.151	0.000	0.536**	0.010	0.280
0.060	0.030	0.020	0.525	0.020	0.506	0.020	0.121
0.110	-0.322	0.040	0.299	0.060	0.573**	0.060	-0.430
0.200	-0.600	0.060	-0.064	0.090	-0.356	0.110	-0.734
0.230	-0.269	0.090	-0.308	0.110	-0.586	0.140	-1.173
0.400	-0.222	0.130	-0.580	0.130	-2.232**	0.190	-2.232**
0.490	-0.199	0.150	-0.877	0.150	-1.025	0.250	-0.787
0.590	-0.238	0.200	-0.977	0.210	-1.038	0.400	-0.349
0.630	-0.240	0.250	-0.870	0.250	-0.959	0.490	-0.316
0.700	-0.240	0.260	-0.461	0.340	-0.297	0.580	-0.315
0.750	-0.245	0.280	-0.336	0.370	-0.322	0.650	-0.398
0.810	-0.222	0.290	-0.284	0.400	-0.297	0.700	-0.368
0.840	-0.226	0.310	-0.269	0.410	-1.018**	0.750	-0.377
0.900	-0.128	0.320	-0.282	0.430	-0.325	0.800	-0.330
0.960	-0.015	0.340	-0.284	0.440	-0.329	0.830	-0.309
		0.350	-0.173**	0.460	-0.326	0.900	-0.196
		0.370	-0.290	0.490	-0.307	0.960	-0.016
		0.380	-0.303	0.500	-0.329		
		0.400	-0.273	0.520	-0.326		
		0.410	-0.292	0.540	-0.317		
		0.430	-0.271	0.550	-0.299		
		0.440	-0.271	0.580	-0.296		
		0.460	-0.286	0.600	-0.326		
		0.470	-0.300	0.610	-0.350		
		0.490	-0.288	0.650	-0.387		
		0.500	-0.293	0.700	-0.392		
		0.520	-0.277	0.750	-0.329		
		0.530	-0.287	0.820	-0.332		
		0.550	-0.307	0.890	-0.136		
		0.560	-0.309	0.900	-0.103		
		0.580	-0.276	0.960	0.018		
		0.590	-0.304				
		0.600	-0.302				
		0.640	-0.376				
		0.700	-0.325				
		0.750	-0.059**				
		0.820	-0.289				
		0.870	-0.244				
		0.930	-0.094				
		0.960	-0.031				
			Lower Surface				
0.020	-1.120	0.020	-0.642	0.020	-0.730	0.020	-0.722
0.110	-0.299	0.060	-0.481	0.060	-0.492	0.060	-0.017
0.230	-0.081	0.090	-0.408	0.090	-0.271	0.110	-0.180
0.400	-0.042	0.120	-0.296	0.120	-0.167	0.250	-0.185
0.490	-0.042	0.200	-0.080	0.200	-0.079	0.400	-0.223
0.630	0.934**	0.260	-0.127	0.250	-0.114	0.490	-0.250
0.750	0.034	0.400	-0.105	0.400	-0.167	0.580	-0.292
0.850	0.061	0.490	-0.103	0.490	-0.078	0.650	-0.143
0.900	0.136	0.580	-0.104	0.580	-0.197	0.750	0.121
0.960	0.129	0.640	0.042	0.650	-0.063	0.830	0.253
		0.750	0.129	0.750	-0.042	0.900	0.299
		0.870	0.197	0.890	0.284	0.960	0.255
		0.930	0.184	0.930	0.233		
		0.960	0.152	0.960	0.225		
CN =	0.181		0.271		0.321		0.360

Table J-2. Continued.

Flight 211, Wing sweep = 26°, Time = 10-32-18-500, MINF = 0.791, Camber = 10/2, ALPT = 6.07, BETA = 0.37, QINF = 579.8, RNPU = 4.8E+06, CNWP = 0.2747

η = 0.93		0.76		0.59		0.40	
			Upper Surface				
x/c	CP	*x/c*	CP	*x/c*	CP	*x/c*	CP
0.020	0.468	0.000	0.279	0.000	0.588**	0.010	0.130
0.060	-0.053	0.020	0.467	0.020	0.403	0.020	-0.023
0.110	-0.396	0.040	0.211	0.060	0.475**	0.060	-0.603
0.200	-1.108	0.060	-0.173	0.090	-0.454	0.110	-0.906
0.230	-0.522	0.090	-0.393	0.110	-0.678	0.140	-1.270
0.400	-0.224	0.130	-0.676	0.130	-2.281**	0.190	-2.281**
0.490	-0.209	0.150	-0.968	0.150	-1.104	0.250	-0.970
0.590	-0.238	0.200	-1.068	0.210	-1.144	0.400	-0.379
0.630	-0.246	0.250	-1.084	0.250	-0.968	0.490	-0.332
0.700	-0.240	0.260	-1.076	0.340	-0.418	0.580	-0.339
0.750	-0.239	0.280	-1.086	0.370	-0.327	0.650	-0.402
0.810	-0.220	0.290	-0.915	0.400	-0.267	0.700	-0.376
0.840	-0.231	0.310	-0.483	0.410	-1.029**	0.750	-0.372
0.900	-0.137	0.320	-0.457	0.430	-0.298	0.800	-0.311
0.960	-0.027	0.340	-0.322	0.440	-0.299	0.830	-0.296
		0.350	-0.157**	0.460	-0.299	0.900	-0.170
		0.370	-0.240	0.490	-0.283	0.960	0.005
		0.380	-0.244	0.500	-0.311		
		0.400	-0.222	0.520	-0.314		
		0.410	-0.246	0.540	-0.306		
		0.430	-0.243	0.550	-0.295		
		0.440	-0.244	0.580	-0.292		
		0.460	-0.260	0.600	-0.324		
		0.470	-0.276	0.610	-0.340		
		0.490	-0.275	0.650	-0.358		
		0.500	-0.277	0.700	-0.370		
		0.520	-0.268	0.750	-0.322		
		0.530	-0.276	0.820	-0.318		
		0.550	-0.303	0.890	-0.131		
		0.560	-0.302	0.900	-0.101		
		0.580	-0.272	0.960	0.017		
		0.590	-0.307				
		0.600	-0.298				
		0.640	-0.365				
		0.700	-0.318				
		0.750	-0.048**				
		0.820	-0.281				
		0.870	-0.240				
		0.930	-0.096				
		0.960	-0.030				
			Lower Surface				
0.020	-1.049	0.020	-0.680	0.020	-0.740	0.020	-0.389
0.110	-0.165	0.060	-0.302	0.060	-0.099	0.060	-0.027
0.230	-0.053	0.090	-0.160	0.090	-0.035	0.110	-0.057
0.400	-0.042	0.120	-0.049	0.120	-0.040	0.250	-0.116
0.490	-0.041	0.200	-0.054	0.200	-0.054	0.400	-0.161
0.630	0.984**	0.260	-0.021	0.250	-0.067	0.490	-0.202
0.750	0.020	0.400	-0.083	0.400	-0.130	0.580	-0.247
0.850	0.055	0.490	-0.101	0.490	-0.064	0.650	-0.118
0.900	0.140	0.580	-0.114	0.580	-0.182	0.750	0.138
0.960	0.127	0.640	0.043	0.650	-0.050	0.830	0.265
		0.750	0.155	0.750	-0.030	0.900	0.310
		0.870	0.212	0.890	0.299	0.960	0.258
		0.930	0.197	0.930	0.242		
		0.960	0.159	0.960	0.210		
CN =	0.258		0.372		0.394		0.456

Table J-2. Continued.

Flight 211, Wing sweep = 26°, Time = 10-32-35-500, MINF = 0.809, Camber = 10/2, ALPT = 7.98, BETA = 0.74, QINF = 606.2, RNPU = 4.9E+06, CNWP = 0.4022

η = 0.93		0.76		0.59		0.40	
			Upper Surface				
x/c	CP	*x/c*	CP	*x/c*	CP	*x/c*	CP
0.020	0.352	0.000	0.522	0.000	0.726**	0.010	-0.048
0.060	-0.171	0.020	0.292	0.020	0.207	0.020	-0.173
0.110	-0.462	0.040	-0.007	0.060	0.338**	0.060	-0.780
0.200	-1.154	0.060	-0.296	0.090	-0.592	0.110	-1.085
0.230	-1.125	0.090	-0.490	0.110	-0.748	0.140	-1.386
0.400	-0.318	0.130	-0.748	0.130	-2.181**	0.190	-2.181**
0.490	-0.147	0.150	-1.010	0.150	-1.129	0.250	-1.391
0.590	-0.204	0.200	-1.110	0.210	-1.185	0.400	-0.819
0.630	-0.238	0.250	-1.170	0.250	-0.926	0.490	-0.462
0.700	-0.230	0.260	-1.155	0.340	-1.227	0.580	-0.336
0.750	-0.249	0.280	-1.134	0.370	-1.225	0.650	-0.345
0.810	-0.231	0.290	-1.134	0.400	-1.165	0.700	-0.330
0.840	-0.251	0.310	-0.834	0.410	-0.984**	0.750	-0.309
0.900	-0.177	0.320	-1.145	0.430	-1.221	0.800	-0.233
0.960	-0.061	0.340	-0.889	0.440	-1.017	0.830	-0.210
		0.350	-0.514**	0.460	-0.696	0.900	-0.099
		0.370	-0.957	0.490	-0.589	0.960	-0.009
		0.380	-1.176	0.500	-0.563		
		0.400	-1.115	0.520	-0.544		
		0.410	-0.851	0.540	-0.507		
		0.430	-1.105	0.550	-0.450		
		0.440	-0.787	0.580	-0.395		
		0.460	-0.734	0.600	-0.361		
		0.470	-0.544	0.610	-0.311		
		0.490	-0.469	0.650	-0.216		
		0.500	-0.421	0.700	-0.220		
		0.520	-0.388	0.750	-0.214		
		0.530	-0.323	0.820	-0.209		
		0.550	-0.280	0.890	-0.084		
		0.560	-0.238	0.900	-0.060		
		0.580	-0.193	0.960	0.034		
		0.590	-0.180				
		0.600	-0.152				
		0.640	-0.197				
		0.700	-0.205				
		0.750	-0.024**				
		0.820	-0.229				
		0.870	-0.201				
		0.930	-0.065				
		0.960	-0.015				
			Lower Surface				
0.020	-0.559	0.020	-0.392	0.020	-0.216	0.020	0.006
0.110	-0.048	0.060	0.054	0.060	0.133	0.060	-0.025
0.230	0.005	0.090	0.043	0.090	0.108	0.110	0.085
0.400	-0.029	0.120	0.092	0.120	0.078	0.250	-0.018
0.490	-0.047	0.200	0.000	0.200	-0.004	0.400	-0.085
0.630	0.942**	0.260	0.048	0.250	0.018	0.490	-0.138
0.750	0.009	0.400	-0.037	0.400	-0.066	0.580	-0.202
0.850	0.042	0.490	-0.075	0.490	-0.036	0.650	-0.088
0.900	0.134	0.580	-0.108	0.580	-0.151	0.750	0.161
0.960	0.120	0.640	0.054	0.650	-0.025	0.830	0.285
		0.750	0.167	0.750	-0.014	0.900	0.322
		0.870	0.240	0.890	0.315	0.960	0.253
		0.930	0.212	0.930	0.254		
		0.960	0.172	0.960	0.208		
CN =	0.365		0.544		0.595		0.643

Table J-2. Continued.

Flight 211, Wing sweep = 26°, Time = 10-32-37-000, MINF = 0.812, Camber = 10/2, ALPT = 8.05, BETA = 0.54, QINF = 611.8, RNPU = 5.0E+06, CNWP = 0.4026

η = 0.93		0.76		0.59		0.40	
			Upper Surface				
x/c	CP	*x/c*	CP	*x/c*	CP	*x/c*	CP
0.020	0.353	0.000	0.522	0.000	0.730**	0.010	-0.084
0.060	-0.164	0.020	0.281	0.020	0.206	0.020	-0.181
0.110	-0.457	0.040	-0.010	0.060	0.332**	0.060	-0.772
0.200	-1.149	0.060	-0.300	0.090	-0.607	0.110	-1.074
0.230	-1.123	0.090	-0.485	0.110	-0.745	0.140	-1.372
0.400	-0.344	0.130	-0.744	0.130	-2.168**	0.190	-2.168**
0.490	-0.140	0.150	-1.006	0.150	-1.118	0.250	-1.385
0.590	-0.198	0.200	-1.102	0.210	-1.181	0.400	-0.837
0.630	-0.231	0.250	-1.164	0.250	-0.924	0.490	-0.498
0.700	-0.222	0.260	-1.150	0.340	-1.222	0.580	-0.337
0.750	-0.238	0.280	-1.130	0.370	-1.213	0.650	-0.342
0.810	-0.221	0.290	-1.130	0.400	-1.161	0.700	-0.327
0.840	-0.241	0.310	-0.833	0.410	-0.981**	0.750	-0.302
0.900	-0.172	0.320	-1.140	0.430	-1.217	0.800	-0.226
0.960	-0.058	0.340	-0.887	0.440	-1.209	0.830	-0.203
		0.350	-0.508**	0.460	-0.709	0.900	-0.093
		0.370	-0.955	0.490	-0.608	0.960	-0.004
		0.380	-1.172	0.500	-0.571		
		0.400	-1.115	0.520	-0.555		
		0.410	-0.850	0.540	-0.515		
		0.430	-1.100	0.550	-0.469		
		0.440	-0.786	0.580	-0.408		
		0.460	-0.966	0.600	-0.380		
		0.470	-0.599	0.610	-0.334		
		0.490	-0.486	0.650	-0.209		
		0.500	-0.443	0.700	-0.217		
		0.520	-0.403	0.750	-0.204		
		0.530	-0.342	0.820	-0.194		
		0.550	-0.303	0.890	-0.076		
		0.560	-0.259	0.900	-0.052		
		0.580	-0.210	0.960	0.038		
		0.590	-0.193				
		0.600	-0.157				
		0.640	-0.178				
		0.700	-0.186				
		0.750	-0.021**				
		0.820	-0.217				
		0.870	-0.189				
		0.930	-0.066				
		0.960	-0.012				
			Lower Surface				
0.020	-0.532	0.020	-0.379	0.020	-0.213	0.020	0.101
0.110	-0.048	0.060	0.052	0.060	0.133	0.060	-0.031
0.230	0.006	0.090	0.043	0.090	0.110	0.110	0.119
0.400	-0.032	0.120	0.092	0.120	0.078	0.250	-0.018
0.490	-0.046	0.200	0.001	0.200	0.010	0.400	-0.087
0.630	0.927**	0.260	0.049	0.250	0.018	0.490	-0.140
0.750	0.006	0.400	-0.038	0.400	-0.065	0.580	-0.211
0.850	0.040	0.490	-0.075	0.490	-0.035	0.650	-0.090
0.900	0.127	0.580	-0.108	0.580	-0.152	0.750	0.160
0.960	0.119	0.640	0.049	0.650	-0.027	0.830	0.283
		0.750	0.162	0.750	-0.013	0.900	0.323
		0.870	0.225	0.890	0.313	0.960	0.254
		0.930	0.211	0.930	0.245		
		0.960	0.171	0.960	0.209		
CN =	0.363		0.542		0.597		0.646

Table J-2. Continued.

Flight 223, Wing sweep = 26°, Time = 10-7-25-000, MINF = 0.691, Camber = 5/15, ALPT = 3.01, BETA = 0.66, QINF = 310.4, RNPU = 2.8E+06, CNWP = 0.3089

η = 0.93		0.76		0.59		0.40	
			Upper Surface				
x/c	CP	*x/c*	CP	*x/c*	CP	*x/c*	CP
0.020	0.338	0.000	0.464	0.000	3.750**	0.010	-0.086
0.060	0.011	0.020	0.196	0.020	0.162	0.020	-0.088
0.110	-0.039	0.040	0.050	0.060	-3.465**	0.060	-0.424
0.200	-0.283	0.060	-0.176	0.090	-0.353	0.110	-0.575
0.230	-0.241	0.090	-0.287	0.110	-0.508	0.140	-0.544
0.400	-0.217	0.130	-0.419	0.130	-0.604	0.190	-2.994**
0.490	-0.256	0.150	-0.513	0.150	-0.562	0.250	-0.384
0.590	-0.374	0.200	-0.410	0.210	-0.485	0.400	-0.376
0.630	-0.407	0.250	-0.369	0.250	-0.357	0.490	-0.355
0.700	-0.559	0.260	-0.346	0.340	-0.405	0.580	-0.375
0.750	-0.748	0.280	-0.356	0.370	-0.418	0.650	-0.548
0.810	-0.686	0.290	-0.356	0.400	-0.335	0.700	-0.537
0.840	-0.727	0.310	-0.354	0.410	-1.584**	0.750	-0.681
0.900	-0.284	0.320	-0.351	0.430	-0.428	0.800	-0.837**
0.960	-0.269	0.340	-0.355	0.440	-0.403	0.830	-0.654
		0.350	-0.211**	0.460	-0.411	0.900	-0.444
		0.370	-0.322	0.490	-0.349	0.960	-0.439
		0.380	-0.383	0.500	-0.435		
		0.400	-0.402	0.520	-0.433		
		0.410	-0.369	0.540	-0.451		
		0.430	-0.353	0.550	-0.389		
		0.440	-0.320	0.580	-0.405		
		0.460	-0.367	0.600	-0.493		
		0.470	-0.378	0.610	-0.488		
		0.490	-0.366	0.650	2.440**		
		0.500	-0.404	0.700	-0.638		
		0.520	-0.392	0.750	-0.692		
		0.530	-0.383	0.820	-0.627**		
		0.550	-0.431	0.890	-0.348		
		0.560	-0.436	0.900	-0.363		
		0.580	-0.419	0.960	-0.350		
		0.590	-0.487				
		0.600	-0.468				
		0.640	-0.606				
		0.700	-0.669				
		0.750	-0.022**				
		0.820	-0.651				
		0.870	-0.473				
		0.930	-0.328				
		0.960	-0.337				
			Lower Surface				
0.020	-0.668	0.020	-0.534	0.020	-0.454	0.020	-0.262
0.110	-0.142	0.060	-0.135	0.060	-0.041	0.060	2.146**
0.230	-0.035	0.090	-0.119	0.090	1.470**	0.110	-0.051
0.400	0.054	0.120	-0.053	0.120	-0.183	0.250	-0.135
0.490	0.108	0.200	-0.025	0.200	-0.036	0.400	-0.061
0.630	2.204**	0.260	-0.003	0.250	-0.054	0.490	-0.033
0.750	0.254	0.400	0.036	0.400	-0.006	0.580	0.030
0.850	0.307	0.490	0.066	0.490	-0.006	0.650	0.253
0.900	0.372	0.580	0.151	0.580	0.133	0.750	0.420
0.960	0.201	0.640	0.359	0.650	-0.041	0.830	0.535
		0.750	0.425	0.750	0.001	0.900	0.570
		0.870	0.470	0.890	0.517	0.960	0.397
		0.930	0.393	0.930	0.430		
		0.960	0.250	0.960	-1.668**		
CN =	0.416		0.570		0.483		0.570

Table J-2. Continued.

Flight 223, Wing sweep = 26°, Time = 8-54-32-000, MINF = 0.812, Camber = 10/2, ALPT = 4.28, BETA = 0.57, QINF = 613.4, RNPU = 5.0E+06, CNWP = 0.1835

η = 0.93		0.76		0.59		0.40	
			Upper Surface				
x/c	CP	*x/c*	CP	*x/c*	CP	*x/c*	CP
0.020	0.590	0.000	0.064	0.000	1.714**	0.010	0.430
0.060	0.105	0.020	0.588	0.020	0.584	0.020	0.269
0.110	-0.310	0.040	0.331	0.060	-1.930**	0.060	-0.242
0.200	-0.345	0.060	-0.001	0.090	-0.265	0.110	-0.617
0.230	-0.251	0.090	-0.218	0.110	-0.490	0.140	-1.063
0.400	-0.187	0.130	-0.515	0.130	-0.804	0.190	-2.169**
0.490	-0.179	0.150	-0.792	0.150	-0.928	0.250	-0.427
0.590	-0.226	0.200	-0.887	0.210	-0.933	0.400	-0.317
0.630	-0.222	0.250	-0.321	0.250	-0.410	0.490	-0.287
0.700	-0.230	0.260	-0.276	0.340	-0.304	0.580	-0.284
0.750	-0.244	0.280	-0.279	0.370	-0.325	0.650	-0.385
0.810	-0.213	0.290	-0.292	0.400	-0.315	0.700	-0.360
0.840	-0.216	0.310	-0.293	0.410	-2.655**	0.750	-0.371
0.900	-0.117	0.320	-0.299	0.430	-0.331	0.800	-0.325**
0.960	0.000	0.340	-0.299	0.440	-0.315	0.830	-0.308
		0.350	-0.220**	0.460	-0.318	0.900	-0.202
		0.370	-0.283	0.490	-0.276	0.960	-0.015
		0.380	-0.304	0.500	-0.314		
		0.400	-0.246	0.520	-0.308		
		0.410	-0.291	0.540	-0.302		
		0.430	-0.272	0.550	-0.272		
		0.440	-0.258	0.580	-0.270		
		0.460	-0.277	0.600	-0.320		
		0.470	-0.287	0.610	-0.335		
		0.490	-0.278	0.650	1.044**		
		0.500	-0.276	0.700	-0.383		
		0.520	-0.273	0.750	-0.333		
		0.530	-0.273	0.820	-0.331**		
		0.550	-0.302	0.890	-0.128		
		0.560	-0.296	0.900	-0.086		
		0.580	-0.270	0.960	0.024		
		0.590	-0.307				
		0.600	-0.297				
		0.640	-0.374				
		0.700	-0.317				
		0.750	-0.066**				
		0.820	-0.282				
		0.870	-0.239				
		0.930	-0.087				
		0.960	-0.025				
			Lower Surface				
0.020	-0.922	0.020	-0.623	0.020	-0.757	0.020	-0.825
0.110	-0.454	0.060	-0.553	0.060	-0.643	0.060	0.903**
0.230	-0.143	0.090	-0.516	0.090	0.567**	0.110	-0.153
0.400	-0.077	0.120	-0.429	0.120	-0.408	0.250	-0.235
0.490	-0.053	0.200	-0.160	0.200	-0.127	0.400	-0.263
0.630	0.925**	0.260	-0.282	0.250	-0.161	0.490	-0.287
0.750	0.033	0.400	-0.142	0.400	-0.206	0.580	-0.321
0.850	0.072	0.490	-0.111	0.490	-0.080	0.650	-0.142
0.900	0.139	0.580	-0.077	0.580	-0.186	0.750	0.102
0.960	0.143	0.640	0.016	0.650	-0.069	0.830	0.260
		0.750	0.123	0.750	-0.040	0.900	0.300
		0.870	0.172	0.890	0.256	0.960	0.259
		0.930	0.174	0.930	0.217		
		0.960	0.140	0.960	-2.698**		
CN =	0.111		0.187		0.208		0.260

Table J-2. Continued.

Flight 223, Wing sweep = 26°, Time = 8-54-38-500, MINF = 0.804, Camber = 10/2, ALPT = 5.18, BETA = 0.72, QINF = 601.2, RNPU = 4.9E+06, CNWP = 0.2224

η = 0.93		0.76		0.59		0.40	
			Upper Surface				
x/c	CP	*x/c*	CP	*x/c*	CP	*x/c*	CP
0.020	0.534	0.000	0.168	0.000	1.753**	0.010	0.317
0.060	0.036	0.020	0.519	0.020	0.508	0.020	0.149
0.110	-0.295	0.040	0.259	0.060	-1.965**	0.060	-0.389
0.200	-1.014	0.060	-0.067	0.090	-0.342	0.110	-0.694
0.230	-0.308	0.090	-0.292	0.110	-0.568	0.140	-1.130
0.400	-0.205	0.130	-0.577	0.130	-0.882	0.190	-2.209**
0.490	-0.194	0.150	-0.873	0.150	-1.006	0.250	-0.844
0.590	-0.236	0.200	-0.975	0.210	-1.024	0.400	-0.337
0.630	-0.232	0.250	-0.957	0.250	-0.964	0.490	-0.304
0.700	-0.234	0.260	-0.951	0.340	-0.288	0.580	-0.301
0.750	-0.241	0.280	-0.559	0.370	-0.288	0.650	-0.399
0.810	-0.214	0.290	-0.355	0.400	-0.277	0.700	-0.374
0.840	-0.217	0.310	-0.281	0.410	-2.705**	0.750	-0.371
0.900	-0.123	0.320	-0.273	0.430	-0.311	0.800	-0.324**
0.960	-0.011	0.340	-0.252	0.440	-0.304	0.830	-0.306
		0.350	-0.173**	0.460	-0.313	0.900	-0.189
		0.370	-0.244	0.490	-0.274	0.960	-0.009
		0.380	-0.272	0.500	-0.316		
		0.400	-0.241	0.520	-0.310		
		0.410	-0.273	0.540	-0.311		
		0.430	-0.262	0.550	-0.276		
		0.440	-0.252	0.580	-0.280		
		0.460	-0.273	0.600	-0.328		
		0.470	-0.285	0.610	-0.337		
		0.490	-0.278	0.650	1.069**		
		0.500	-0.275	0.700	-0.402		
		0.520	-0.278	0.750	-0.338		
		0.530	-0.275	0.820	-0.319**		
		0.550	-0.304	0.890	-0.129		
		0.560	-0.304	0.900	-0.088		
		0.580	-0.275	0.960	0.018		
		0.590	-0.312				
		0.600	-0.304				
		0.640	-0.361				
		0.700	-0.317				
		0.750	-0.058**				
		0.820	-0.280				
		0.870	-0.240				
		0.930	-0.091				
		0.960	-0.029				
			Lower Surface				
0.020	-1.045	0.020	-0.617	0.020	-0.695	0.020	-0.581
0.110	-0.284	0.060	-0.497	0.060	-0.467	0.060	0.925**
0.230	-0.082	0.090	-0.409	0.090	0.583**	0.110	-0.061
0.400	-0.042	0.120	-0.272	0.120	-0.153	0.250	-0.174
0.490	-0.048	0.200	-0.081	0.200	-0.073	0.400	-0.207
0.630	0.947**	0.260	-0.111	0.250	-0.102	0.490	-0.244
0.750	0.019	0.400	-0.096	0.400	-0.171	0.580	-0.284
0.850	0.064	0.490	-0.106	0.490	-0.068	0.650	-0.130
0.900	0.135	0.580	-0.099	0.580	-0.186	0.750	0.117
0.960	0.144	0.640	0.039	0.650	-0.063	0.830	0.274
		0.750	0.146	0.750	-0.037	0.900	0.310
		0.870	0.211	0.890	0.269	0.960	0.262
		0.930	0.189	0.930	0.225		
		0.960	0.148	0.960	-2.749**		
CN =	0.195		0.283		0.305		0.374

Table J-2. Continued.

Flight 223, Wing sweep = 26°, Time = 8-54-44-000, MINF = 0.801, Camber = 10/2, ALPT = 6.08, BETA = 0.63, QINF = 595.8, RNPU = 4.9E+06, CNWP = 0.2493

η = 0.93		0.76		0.59		0.40	
			Upper Surface				
x/c	CP	*x/c*	CP	*x/c*	CP	*x/c*	CP
0.020	0.497	0.000	0.242	0.000	1.771**	0.010	0.225
0.060	-0.006	0.020	0.486	0.020	0.454	0.020	0.058
0.110	-0.363	0.040	0.206	0.060	-1.980**	0.060	-0.495
0.200	-1.056	0.060	-0.120	0.090	-0.393	0.110	-0.789
0.230	-0.585	0.090	-0.344	0.110	-0.613	0.140	-1.180
0.400	-0.198	0.130	-0.609	0.130	-0.922	0.190	-2.226**
0.490	-0.197	0.150	-0.916	0.150	-1.069	0.250	-0.900
0.590	-0.221	0.200	-1.017	0.210	-1.078	0.400	-0.358
0.630	-0.237	0.250	-1.013	0.250	-0.970	0.490	-0.311
0.700	-0.236	0.260	-1.013	0.340	-0.436	0.580	-0.307
0.750	-0.239	0.280	-1.017	0.370	-0.317	0.650	-0.393
0.810	-0.217	0.290	-0.998	0.400	-0.259	0.700	-0.368
0.840	-0.216	0.310	-0.619	0.410	-2.727**	0.750	-0.365
0.900	-0.127	0.320	-0.520	0.430	-0.274	0.800	-0.314**
0.960	-0.012	0.340	-0.330	0.440	-0.272	0.830	-0.301
		0.350	-0.178**	0.460	-0.288	0.900	-0.167
		0.370	-0.217	0.490	-0.252	0.960	0.002
		0.380	-0.228	0.500	-0.303		
		0.400	-0.184	0.520	-0.302		
		0.410	-0.225	0.540	-0.291		
		0.430	-0.223	0.550	-0.270		
		0.440	-0.216	0.580	-0.271		
		0.460	-0.249	0.600	-0.315		
		0.470	-0.255	0.610	-0.331		
		0.490	-0.252	0.650	1.081**		
		0.500	-0.263	0.700	-0.370		
		0.520	-0.244	0.750	-0.330		
		0.530	-0.262	0.820	-0.314**		
		0.550	-0.274	0.890	-0.124		
		0.560	-0.291	0.900	-0.083		
		0.580	-0.264	0.960	0.021		
		0.590	-0.307				
		0.600	-0.297				
		0.640	-0.360				
		0.700	-0.314				
		0.750	-0.049**				
		0.820	-0.276				
		0.870	-0.240				
		0.930	-0.087				
		0.960	-0.025				
			Lower Surface				
0.020	-1.020	0.020	-0.583	0.020	-0.593	0.020	-0.358
0.110	-0.190	0.060	-0.408	0.060	-0.247	0.060	0.936**
0.230	-0.058	0.090	-0.280	0.090	0.591**	0.110	-0.012
0.400	-0.032	0.120	-0.133	0.120	-0.062	0.250	-0.129
0.490	-0.024	0.200	-0.060	0.200	-0.056	0.400	-0.166
0.630	0.959**	0.260	-0.041	0.250	-0.068	0.490	-0.218
0.750	0.027	0.400	-0.074	0.400	-0.151	0.580	-0.264
0.850	0.074	0.490	-0.101	0.490	-0.054	0.650	-0.107
0.900	0.136	0.580	-0.098	0.580	-0.171	0.750	0.130
0.960	0.140	0.640	0.051	0.650	-0.050	0.830	0.279
		0.750	0.165	0.750	-0.035	0.900	0.319
		0.870	0.237	0.890	0.285	0.960	0.269
		0.930	0.200	0.930	0.237		
		0.960	0.157	0.960	-2.771**		
CN =	0.248		0.347		0.355		0.424

Table J-2. Continued.

Flight 223, Wing sweep = 26°, Time = 8-55-1-000, MINF = 0.804, Camber = 10/2, ALPT = 9.02, BETA = 0.66, QINF = 610.5, RNPU = 5.0E+06, CNWP = 0.4424

η = 0.93		0.76		0.59		0.40	
			Upper Surface				
x/c	CP	*x/c*	CP	*x/c*	CP	*x/c*	CP
0.020	0.264	0.000	0.622	0.000	1.691**	0.010	-0.176
0.060	-0.239	0.020	0.165	0.020	0.085	0.020	-0.238
0.110	-0.454	0.040	-0.057	0.060	-1.970**	0.060	-0.821
0.200	-1.173	0.060	-0.411	0.090	-0.742	0.110	-1.140
0.230	-1.130	0.090	-0.562	0.110	-0.868	0.140	-1.397
0.400	-0.474	0.130	-0.812	0.130	-1.123	0.190	-2.210**
0.490	-0.152	0.150	-1.045	0.150	-1.182	0.250	-1.428
0.590	-0.213	0.200	-1.137	0.210	-1.179	0.400	-0.895
0.630	-0.237	0.250	-1.188	0.250	-0.984	0.490	-0.555
0.700	-0.238	0.260	-1.194	0.340	-1.272	0.580	-0.339
0.750	-0.258	0.280	-1.149	0.370	-1.266	0.650	-0.328
0.810	-0.240	0.290	-1.149	0.400	-1.217	0.700	-0.313
0.840	-0.252	0.310	-0.859	0.410	-2.699**	0.750	-0.259
0.900	-0.192	0.320	-1.153	0.430	-1.260	0.800	-0.209**
0.960	-0.073	0.340	-0.927	0.440	-0.946	0.830	-0.186
		0.350	-0.542**	0.460	-0.770	0.900	-0.091
		0.370	-0.987	0.490	-0.624	0.960	-0.016
		0.380	-1.184	0.500	-0.619		
		0.400	-1.156	0.520	-0.606		
		0.410	-0.861	0.540	-0.586		
		0.430	-1.143	0.550	-0.545		
		0.440	-0.769	0.580	-0.499		
		0.460	-0.818	0.600	-0.510		
		0.470	-0.609	0.610	-0.456		
		0.490	-0.538	0.650	1.018**		
		0.500	-0.509	0.700	-0.285		
		0.520	-0.491	0.750	-0.256		
		0.530	-0.437	0.820	-0.176**		
		0.550	-0.420	0.890	-0.066		
		0.560	-0.377	0.900	-0.040		
		0.580	-0.334	0.960	0.020		
		0.590	-0.309				
		0.600	-0.262				
		0.640	-0.193				
		0.700	-0.191				
		0.750	-0.015**				
		0.820	-0.193				
		0.870	-0.169				
		0.930	-0.060				
		0.960	-0.010				
			Lower Surface				
0.020	-0.304	0.020	-0.157	0.020	-0.064	0.020	0.239
0.110	-0.020	0.060	0.136	0.060	0.202	0.060	0.876**
0.230	0.036	0.090	0.096	0.090	0.539**	0.110	0.193
0.400	-0.039	0.120	0.143	0.120	0.133	0.250	0.032
0.490	-0.031	0.200	0.030	0.200	0.034	0.400	-0.041
0.630	0.884**	0.260	0.088	0.250	0.064	0.490	-0.103
0.750	0.001	0.400	-0.006	0.400	-0.037	0.580	-0.171
0.850	0.041	0.490	-0.060	0.490	-0.016	0.650	-0.059
0.900	0.124	0.580	-0.091	0.580	-0.120	0.750	0.160
0.960	0.109	0.640	0.056	0.650	-0.016	0.830	0.300
		0.750	0.178	0.750	0.007	0.900	0.328
		0.870	0.238	0.890	0.296	0.960	0.247
		0.930	0.201	0.930	0.238		
		0.960	0.154	0.960	-2.742**		
CN =	0.405		0.595		0.664		0.711

Table J-2. Continued.

Flight 223, Wing sweep = 26°, Time = 8-55-3-500, MINF = 0.793, Camber = 10/2, ALPT = 9.06, BETA = 0.69, QINF = 594.7, RNPU = 4.9E+06, CNWP = 0.3973

η = 0.93		0.76		0.59		0.40	
			Upper Surface				
x/c	CP	*x/c*	CP	*x/c*	CP	*x/c*	CP
0.020	0.257	0.000	0.632	0.000	1.731**	0.010	-0.189
0.060	-0.253	0.020	0.161	0.020	0.065	0.020	-0.253
0.110	-0.522	0.040	-0.074	0.060	-2.028**	0.060	-0.862
0.200	-1.202	0.060	-0.428	0.090	-0.749	0.110	-1.168
0.230	-1.131	0.090	-0.584	0.110	-0.889	0.140	-1.433
0.400	-0.257	0.130	-0.838	0.130	-1.152	0.190	-2.274**
0.490	-0.173	0.150	-1.078	0.150	-1.204	0.250	-1.464
0.590	-0.244	0.200	-1.168	0.210	-1.216	0.400	-0.745
0.630	-0.247	0.250	-1.218	0.250	-1.016	0.490	-0.416
0.700	-0.245	0.260	-1.220	0.340	-1.297	0.580	-0.314
0.750	-0.259	0.280	-1.185	0.370	-1.286	0.650	-0.335
0.810	-0.232	0.290	-1.185	0.400	-1.002	0.700	-0.314
0.840	-0.249	0.310	-0.887	0.410	-2.776**	0.750	-0.272
0.900	-0.184	0.320	-1.189	0.430	-0.693	0.800	-0.216**
0.960	-0.070	0.340	-0.957	0.440	-0.645	0.830	-0.193
		0.350	-0.552**	0.460	-0.630	0.900	-0.103
		0.370	-1.019	0.490	-0.578	0.960	-0.025
		0.380	-1.221	0.500	-0.577		
		0.400	-1.169	0.520	-0.548		
		0.410	-0.890	0.540	-0.510		
		0.430	-0.612	0.550	-0.449		
		0.440	-0.566	0.580	-0.396		
		0.460	-0.544	0.600	-0.385		
		0.470	-0.499	0.610	-0.331		
		0.490	-0.444	0.650	1.040**		
		0.500	-0.403	0.700	-0.258		
		0.520	-0.357	0.750	-0.237		
		0.530	-0.294	0.820	-0.189**		
		0.550	-0.269	0.890	-0.072		
		0.560	-0.242	0.900	-0.049		
		0.580	-0.213	0.960	0.019		
		0.590	-0.217				
		0.600	-0.195				
		0.640	-0.219				
		0.700	-0.221				
		0.750	-0.018**				
		0.820	-0.219				
		0.870	-0.192				
		0.930	-0.069				
		0.960	-0.019				
			Lower Surface				
0.020	-0.259	0.020	-0.156	0.020	-0.072	0.020	0.241
0.110	-0.012	0.060	0.126	0.060	0.196	0.060	0.894**
0.230	0.035	0.090	0.100	0.090	0.548**	0.110	0.190
0.400	-0.008	0.120	0.145	0.120	0.134	0.250	0.031
0.490	-0.049	0.200	0.029	0.200	0.033	0.400	-0.036
0.630	0.902**	0.260	0.092	0.250	0.067	0.490	-0.096
0.750	0.002	0.400	-0.004	0.400	-0.031	0.580	-0.164
0.850	0.042	0.490	-0.056	0.490	-0.015	0.650	-0.053
0.900	0.129	0.580	-0.086	0.580	-0.110	0.750	0.161
0.960	0.114	0.640	0.060	0.650	-0.018	0.830	0.301
		0.750	0.189	0.750	0.007	0.900	0.326
		0.870	0.247	0.890	0.295	0.960	0.250
		0.930	0.199	0.930	0.239		
		0.960	0.154	0.960	-2.820**		
CN =	0.387		0.585		0.629		0.694

Table J-2. Continued.

Flight 223, Wing sweep = 26°, Time = 8-50-5-500, MINF = 0.801, Camber = 5/10, ALPT = 2.99, BETA = 0.83, QINF = 601.7, RNPU = 4.9E+06, CNWP = 0.1594

η = 0.93		0.76		0.59		0.40	
			Upper Surface				
x/c	CP	*x/c*	CP	*x/c*	CP	*x/c*	CP
0.020	0.468	0.000	0.352	0.000	1.729**	0.010	0.153
0.060	0.112	0.020	0.477	0.020	0.378	0.020	0.040
0.110	-0.111	0.040	0.242	0.060	-3.696**	0.060	-0.258
0.200	-0.216	0.060	0.016	0.090	-0.199	0.110	-0.463
0.230	-0.210	0.090	-0.114	0.110	-0.339	0.140	-0.666
0.400	-0.173	0.130	-0.267	0.130	-0.520	0.190	-2.229**
0.490	-0.189	0.150	-0.411	0.150	-0.405	0.250	-0.321
0.590	-0.267	0.200	-0.324	0.210	-0.400	0.400	-0.303
0.630	-0.288	0.250	-0.266	0.250	-0.296	0.490	-0.283
0.700	-0.358	0.260	-0.261	0.340	-0.301	0.580	-0.295
0.750	-1.006	0.280	-0.279	0.370	-0.317	0.650	-0.418
0.810	-0.864	0.290	-0.268	0.400	-0.300	0.700	-0.386
0.840	-0.946	0.310	-0.271	0.410	-2.726**	0.750	-0.430
0.900	-0.201	0.320	-0.278	0.430	-0.327	0.800	-2.630**
0.960	-0.157	0.340	-0.273	0.440	-0.309	0.830	-0.662
		0.350	-0.219**	0.460	-0.315	0.900	-0.403
		0.370	-0.258	0.490	-0.261	0.960	-0.395
		0.380	-0.278	0.500	-0.324		
		0.400	-0.228	0.520	-0.313		
		0.410	-0.281	0.540	-0.319		
		0.430	-0.255	0.550	-0.283		
		0.440	-0.255	0.580	-0.291		
		0.460	-0.273	0.600	-0.339		
		0.470	-0.282	0.610	-0.358		
		0.490	-0.274	0.650	1.046**		
		0.500	-0.294	0.700	-0.533		
		0.520	-0.284	0.750	-0.394		
		0.530	-0.283	0.820	-0.971**		
		0.550	-0.313	0.890	-0.303		
		0.560	-0.323	0.900	-0.379		
		0.580	-0.302	0.960	-0.297		
		0.590	-0.343				
		0.600	-0.324				
		0.640	-0.469				
		0.700	-0.393				
		0.750	-0.063**				
		0.820	-0.560				
		0.870	-0.387				
		0.930	-0.284				
		0.960	-0.273				
			Lower Surface				
0.020	-0.926	0.020	-2.628	0.020	-1.367	0.020	-0.395
0.110	-0.453	0.060	-0.694	0.060	-0.461	0.060	0.902**
0.230	-0.152	0.090	-0.501	0.090	0.553**	0.110	-0.250
0.400	-0.017	0.120	-0.273	0.120	-0.293	0.250	-0.292
0.490	0.030	0.200	-0.148	0.200	-0.149	0.400	-0.226
0.630	0.931**	0.260	-0.131	0.250	-0.209	0.490	-0.212
0.750	0.153	0.400	-0.079	0.400	-0.148	0.580	-0.151
0.850	0.204	0.490	-0.037	0.490	-0.068	0.650	0.069
0.900	0.278	0.580	0.035	0.580	-0.032	0.750	0.282
0.960	0.170	0.640	0.218	0.650	-0.078	0.830	0.414
		0.750	0.286	0.750	-0.021	0.900	0.457
		0.870	0.345	0.890	0.405	0.960	0.328
		0.930	0.263	0.930	0.324		
		0.960	0.152	0.960	-2.769**		
CN =	0.278		0.292		0.253		0.350

Table J-2. Continued.

Flight 223, Wing sweep = 26°, Time = 8-50-31-000, MINF = 0.802, Camber = 5/10, ALPT = 5.00, BETA = 0.69, QINF = 609.5, RNPU = 5.0E+06, CNWP = 0.2512

η = 0.93		0.76		0.59		0.40	
			Upper Surface				
x/c	CP	*x/c*	CP	*x/c*	CP	*x/c*	CP
0.020	0.300	0.000	0.609	0.000	1.686**	0.010	-0.205
0.060	-0.048	0.020	0.176	0.020	0.105	0.020	-0.257
0.110	-0.287	0.040	0.024	0.060	-1.981**	0.060	-0.614
0.200	-0.313	0.060	-0.221	0.090	-0.413	0.110	-0.735
0.230	-0.327	0.090	-0.333	0.110	-0.559	0.140	-0.943
0.400	-0.226	0.130	-0.532	0.130	-0.749	0.190	-2.222**
0.490	-0.225	0.150	-0.731	0.150	-0.841	0.250	-0.542
0.590	-0.296	0.200	-0.751	0.210	-0.844	0.400	-0.373
0.630	-0.315	0.250	-0.349	0.250	-0.364	0.490	-0.342
0.700	-0.370	0.260	-0.358	0.340	-0.372	0.580	-0.347
0.750	-0.798	0.280	-0.372	0.370	-0.388	0.650	-0.467
0.810	-0.767	0.290	-0.366	0.400	-0.366	0.700	-0.438
0.840	-0.863	0.310	-0.360	0.410	-2.712**	0.750	-0.464
0.900	-0.253	0.320	-0.366	0.430	-0.394	0.800	-2.617**
0.960	-0.219	0.340	-0.359	0.440	-0.375	0.830	-0.623
		0.350	-0.198**	0.460	-0.379	0.900	-0.416
		0.370	-0.333	0.490	-0.336	0.960	-0.406
		0.380	-0.354	0.500	-0.373		
		0.400	-0.297	0.520	-0.362		
		0.410	-0.343	0.540	-0.367		
		0.430	-0.317	0.550	-0.330		
		0.440	-0.309	0.580	-0.318		
		0.460	-0.330	0.600	-0.385		
		0.470	-0.340	0.610	-0.399		
		0.490	-0.334	0.650	1.012**		
		0.500	-0.336	0.700	-0.626		
		0.520	-0.328	0.750	-0.492		
		0.530	-0.336	0.820	-0.979**		
		0.550	-0.362	0.890	-0.321		
		0.560	-0.367	0.900	-0.372		
		0.580	-0.336	0.960	-0.289		
		0.590	-0.381				
		0.600	-0.369				
		0.640	-0.668				
		0.700	-0.441				
		0.750	-0.030**				
		0.820	-0.573				
		0.870	-0.380				
		0.930	-0.283				
		0.960	-0.285				
			Lower Surface				
0.020	-0.839	0.020	-0.830	0.020	-0.402	0.020	0.066
0.110	-0.165	0.060	-0.140	0.060	-0.064	0.060	0.869**
0.230	-0.039	0.090	-0.141	0.090	0.532**	0.110	-0.053
0.400	0.001	0.120	-0.087	0.120	-0.144	0.250	-0.164
0.490	0.038	0.200	-0.035	0.200	-0.042	0.400	-0.141
0.630	0.899**	0.260	-0.054	0.250	-0.106	0.490	-0.144
0.750	0.184	0.400	-0.038	0.400	-0.089	0.580	-0.108
0.850	0.217	0.490	-0.017	0.490	-0.028	0.650	0.104
0.900	0.288	0.580	0.046	0.580	-0.003	0.750	0.321
0.960	0.149	0.640	0.248	0.650	-0.035	0.830	0.446
		0.750	0.321	0.750	-0.006	0.900	0.493
		0.870	0.421	0.890	0.453	0.960	0.335
		0.930	0.312	0.930	0.363		
		0.960	0.193	0.960	-2.755**		
CN =	0.382		0.490		0.440		0.535

Table J-2. Continued.

Flight 223, Wing sweep = 26°, Time = 8-50-40-000, MINF = 0.810, Camber = 5/10, ALPT = 6.02, BETA = 0.69, QINF = 619.2, RNPU = 5.0E+06, CNWP = 0.2762

η = 0.93		0.76		0.59		0.40	
			Upper Surface				
x/c	CP	*x/c*	CP	*x/c*	CP	*x/c*	CP
0.020	0.202	0.000	0.707	0.000	1.669**	0.010	-0.388
0.060	-0.138	0.020	0.049	0.020	-0.060	0.020	-0.358
0.110	-0.370	0.040	-0.079	0.060	-1.940**	0.060	-0.730
0.200	-0.795	0.060	-0.312	0.090	-0.486	0.110	-0.880
0.230	-0.272	0.090	-0.403	0.110	-0.624	0.140	-1.079
0.400	-0.243	0.130	-0.595	0.130	-0.787	0.190	-2.177**
0.490	-0.255	0.150	-0.780	0.150	-0.869	0.250	-0.755
0.590	-0.309	0.200	-0.817	0.210	-0.903	0.400	-0.395
0.630	-0.344	0.250	-0.870	0.250	-0.905	0.490	-0.359
0.700	-0.372	0.260	-0.859	0.340	-0.407	0.580	-0.364
0.750	-0.982	0.280	-0.862	0.370	-0.330	0.650	-0.478
0.810	-0.867	0.290	-0.852	0.400	-0.304	0.700	-0.446
0.840	-0.932	0.310	-0.496	0.410	-2.660**	0.750	-0.485
0.900	-0.277	0.320	-0.399	0.430	-0.338	0.800	-2.566**
0.960	-0.256	0.340	-0.272	0.440	-0.321	0.830	-0.701
		0.350	-0.140**	0.460	-0.335	0.900	-0.436
		0.370	-0.240	0.490	-0.310	0.960	-0.396
		0.380	-0.271	0.500	-0.349		
		0.400	-0.249	0.520	-0.344		
		0.410	-0.288	0.540	-0.349		
		0.430	-0.283	0.550	-0.317		
		0.440	-0.276	0.580	-0.313		
		0.460	-0.306	0.600	-0.378		
		0.470	-0.324	0.610	-0.397		
		0.490	-0.318	0.650	1.005**		
		0.500	-0.324	0.700	-0.622		
		0.520	-0.323	0.750	-0.505		
		0.530	-0.330	0.820	-0.893**		
		0.550	-0.361	0.890	-0.318		
		0.560	-0.363	0.900	-0.380		
		0.580	-0.335	0.960	-0.308		
		0.590	-0.379				
		0.600	-0.370				
		0.640	-0.666				
		0.700	-0.510				
		0.750	-0.027**				
		0.820	-0.557				
		0.870	-0.400				
		0.930	-0.286				
		0.960	-0.294				
			Lower Surface				
0.020	-0.530	0.020	-0.416	0.020	-0.211	0.020	0.214
0.110	-0.157	0.060	-0.071	0.060	0.021	0.060	0.865**
0.230	-0.010	0.090	-0.070	0.090	0.533**	0.110	0.002
0.400	0.009	0.120	-0.034	0.120	-0.069	0.250	-0.118
0.490	0.054	0.200	-0.007	0.200	-0.001	0.400	-0.112
0.630	0.894**	0.260	-0.023	0.250	-0.059	0.490	-0.117
0.750	0.173	0.400	-0.018	0.400	-0.056	0.580	-0.089
0.850	0.218	0.490	-0.007	0.490	-0.021	0.650	0.112
0.900	0.295	0.580	0.075	0.580	0.014	0.750	0.335
0.960	0.136	0.640	0.265	0.650	-0.033	0.830	0.453
		0.750	0.324	0.750	-0.007	0.900	0.504
		0.870	0.419	0.890	0.466	0.960	0.342
		0.930	0.311	0.930	0.376		
		0.960	0.189	0.960	-2.702**		
CN =	0.450		0.563		0.509		0.625

Table J-2. Continued.

Flight 223, Wing sweep = 26°, Time = 8-50-45-000, MINF = 0.804, Camber = 5/10, ALPT = 7.08, BETA = 0.57, QINF = 608.2, RNPU = 5.0E+06, CNWP = 0.3166

η = 0.93		0.76		0.59		0.40	
			Upper Surface				
x/c	CP	*x/c*	CP	*x/c*	CP	*x/c*	CP
0.020	0.054	0.000	0.801	0.000	1.705**	0.010	-0.750
0.060	-0.255	0.020	-0.121	0.020	-0.239	0.020	-0.626
0.110	-0.445	0.040	-0.227	0.060	-1.970**	0.060	-0.830
0.200	-0.885	0.060	-0.442	0.090	-0.710	0.110	-1.025
0.230	-0.713	0.090	-0.511	0.110	-0.769	0.140	-1.189
0.400	-0.237	0.130	-0.674	0.130	-0.913	0.190	-2.211**
0.490	-0.246	0.150	-0.862	0.150	-0.950	0.250	-1.141
0.590	-0.322	0.200	-0.904	0.210	-0.975	0.400	-0.421
0.630	-0.346	0.250	-0.954	0.250	-0.924	0.490	-0.378
0.700	-0.388	0.260	-0.967	0.340	-1.039	0.580	-0.377
0.750	-0.993	0.280	-0.975	0.370	-1.026	0.650	-0.491
0.810	-0.882	0.290	-0.960	0.400	-0.482	0.700	-0.473
0.840	-0.943	0.310	-0.819	0.410	-2.702**	0.750	-0.510
0.900	-0.318	0.320	-0.943	0.430	-0.360	0.800	-2.607**
0.960	-0.279	0.340	-0.873	0.440	-0.311	0.830	-1.031
		0.350	-0.431**	0.460	-0.310	0.900	-0.438
		0.370	-0.803	0.490	-0.246	0.960	-0.314
		0.380	-0.446	0.500	-0.317		
		0.400	-0.286	0.520	-0.320		
		0.410	-0.260	0.540	-0.323		
		0.430	-0.218	0.550	-0.292		
		0.440	-0.211	0.580	-0.326		
		0.460	-0.229	0.600	-0.367		
		0.470	-0.237	0.610	-0.385		
		0.490	-0.253	0.650	1.029**		
		0.500	-0.268	0.700	-0.602		
		0.520	-0.277	0.750	-0.484		
		0.530	-0.281	0.820	-1.038**		
		0.550	-0.325	0.890	-0.294		
		0.560	-0.332	0.900	-0.358		
		0.580	-0.322	0.960	-0.273		
		0.590	-0.369				
		0.600	-0.366				
		0.640	-0.661				
		0.700	-0.422				
		0.750	-0.029**				
		0.820	-0.591				
		0.870	-0.506				
		0.930	-0.285				
		0.960	-0.289				
			Lower Surface				
0.020	-0.307	0.020	-0.205	0.020	-0.040	0.020	0.310
0.110	-0.105	0.060	0.051	0.060	0.122	0.060	0.887**
0.230	0.035	0.090	0.018	0.090	0.549**	0.110	0.078
0.400	0.023	0.120	0.036	0.120	0.000	0.250	-0.059
0.490	0.047	0.200	0.040	0.200	0.044	0.400	-0.058
0.630	0.916**	0.260	0.022	0.250	-0.007	0.490	-0.077
0.750	0.165	0.400	0.012	0.400	-0.019	0.580	-0.045
0.850	0.202	0.490	0.018	0.490	-0.019	0.650	0.142
0.900	0.292	0.580	0.086	0.580	0.034	0.750	0.361
0.960	0.126	0.640	0.279	0.650	-0.033	0.830	0.475
		0.750	0.331	0.750	0.003	0.900	0.517
		0.870	0.419	0.890	0.470	0.960	0.360
		0.930	0.317	0.930	0.376		
		0.960	0.191	0.960	-2.745**		
CN =	0.524		0.656		0.619		0.777

Table J-2. Continued.

Flight 223, Wing sweep = 26°, Time = 8-50-49-500, MINF = 0.789, Camber = 5/10, ALPT = 8.00, BETA = 0.57, QINF = 584.2, RNPU = 4.8E+06, CNWP = 0.3653

η = 0.93		0.76		0.59		0.40	
			Upper Surface				
x/c	CP	*x/c*	CP	*x/c*	CP	*x/c*	CP
0.020	-0.149	0.000	0.847	0.000	1.779**	0.010	-0.898
0.060	-0.399	0.020	-0.387	0.020	-0.475	0.020	-0.972
0.110	-0.523	0.040	-0.395	0.060	-2.047**	0.060	-0.961
0.200	-0.963	0.060	-0.655	0.090	-0.894	0.110	-1.146
0.230	-0.835	0.090	-0.742	0.110	-0.947	0.140	-1.328
0.400	-0.251	0.130	-0.851	0.130	-1.072	0.190	-2.298**
0.490	-0.266	0.150	-0.968	0.150	-1.080	0.250	-1.298
0.590	-0.342	0.200	-0.983	0.210	-1.130	0.400	-0.491
0.630	-0.369	0.250	-1.061	0.250	-0.958	0.490	-0.397
0.700	-0.419	0.260	-1.070	0.340	-1.147	0.580	-0.400
0.750	-1.030	0.280	-1.089	0.370	-1.149	0.650	-0.516
0.810	-0.918	0.290	-1.089	0.400	-0.729	0.700	-0.508
0.840	-0.978	0.310	-0.849	0.410	-2.809**	0.750	-0.577
0.900	-0.354	0.320	-1.061	0.430	-0.479	0.800	-0.803**
0.960	-0.334	0.340	-0.905	0.440	-0.410	0.830	-0.759
		0.350	-0.461**	0.460	-0.371	0.900	-0.251
		0.370	-0.962	0.490	-0.311	0.960	-0.178
		0.380	-0.977	0.500	-0.328		
		0.400	-0.495	0.520	-0.322		
		0.410	-0.397	0.540	-0.328		
		0.430	-0.303	0.550	-0.306		
		0.440	-0.264	0.580	-0.310		
		0.460	-0.252	0.600	-0.377		
		0.470	-0.246	0.610	-0.396		
		0.490	-0.244	0.650	1.076**		
		0.500	-0.256	0.700	-0.525		
		0.520	-0.261	0.750	-0.464		
		0.530	-0.276	0.820	-0.906**		
		0.550	-0.318	0.890	-0.256		
		0.560	-0.336	0.900	-0.282		
		0.580	-0.320	0.960	-0.226		
		0.590	-0.364				
		0.600	-0.365				
		0.640	-0.519				
		0.700	-0.458				
		0.750	-0.021**				
		0.820	-0.590				
		0.870	-0.465				
		0.930	-0.293				
		0.960	-0.292				
			Lower Surface				
0.020	-0.184	0.020	0.013	0.020	0.129	0.020	0.469
0.110	-0.047	0.060	0.151	0.060	0.216	0.060	0.927**
0.230	0.087	0.090	0.105	0.090	0.575**	0.110	0.155
0.400	0.046	0.120	0.101	0.120	0.077	0.250	0.001
0.490	0.060	0.200	0.090	0.200	0.088	0.400	-0.014
0.630	0.958**	0.260	0.073	0.250	0.056	0.490	-0.030
0.750	0.161	0.400	0.047	0.400	0.022	0.580	-0.004
0.850	0.194	0.490	0.044	0.490	-0.005	0.650	0.164
0.900	0.273	0.580	0.113	0.580	0.066	0.750	0.377
0.960	0.106	0.640	0.285	0.650	-0.027	0.830	0.489
		0.750	0.339	0.750	0.014	0.900	0.538
		0.870	0.447	0.890	0.482	0.960	0.368
		0.930	0.310	0.930	0.384		
		0.960	0.194	0.960	-2.854**		
CN =	0.594		0.750		0.698		0.847

Table J-2. Continued.

Flight 211, Wing sweep = 26°, Time = 10-28-38-500, MINF = 0.800, Camber = 5/10, ALPT = 3.03, BETA = 0.31, QINF = 601.9, RNPU = 4.9E+06, CNWP = 0.2194

η = 0.93		0.76		0.59		0.40	
			Upper Surface				
x/c	CP	*x/c*	CP	*x/c*	CP	*x/c*	CP
0.020	0.473	0.000	0.360	0.000	0.558**	0.010	0.130
0.060	0.109	0.020	0.429	0.020	0.375	0.020	0.014
0.110	-0.130	0.040	0.276	0.060	0.576**	0.060	-0.302
0.200	-0.220	0.060	0.009	0.090	-0.221	0.110	-0.506
0.230	-0.249	0.090	-0.136	0.110	-0.365	0.140	-0.712
0.400	-0.180	0.130	-0.296	0.130	-2.234**	0.190	-2.234**
0.490	-0.189	0.150	-0.411	0.150	-0.429	0.250	-0.347
0.590	-0.264	0.200	-0.338	0.210	-0.406	0.400	-0.312
0.630	-0.296	0.250	-0.278	0.250	-0.316	0.490	-0.282
0.700	-0.359	0.260	-0.277	0.340	-0.314	0.580	-0.306
0.750	-1.011	0.280	-0.284	0.370	-0.328	0.650	-0.420
0.810	-0.909	0.290	-0.284	0.400	-0.288	0.700	-0.400
0.840	-0.961	0.310	-0.265	0.410	-0.397**	0.750	-0.436
0.900	-0.174	0.320	-0.278	0.430	-0.326	0.800	-0.274
0.960	-0.134	0.340	-0.271	0.440	-0.314	0.830	-0.655
		0.350	-0.193**	0.460	-0.314	0.900	-0.392
		0.370	-0.265	0.490	-0.294	0.960	-0.391
		0.380	-0.283	0.500	-0.325		
		0.400	-0.249	0.520	-0.318		
		0.410	-0.270	0.540	-0.317		
		0.430	-0.265	0.550	-0.298		
		0.440	-0.255	0.580	-0.293		
		0.460	-0.276	0.600	-0.343		
		0.470	-0.283	0.610	-0.370		
		0.490	-0.287	0.650	-0.542		
		0.500	-0.281	0.700	-0.506		
		0.520	-0.276	0.750	-0.379		
		0.530	-0.292	0.820	-0.904		
		0.550	-0.314	0.890	-0.309		
		0.560	-0.324	0.900	-0.379		
		0.580	-0.297	0.960	-0.294		
		0.590	-0.337				
		0.600	-0.328				
		0.640	-0.478				
		0.700	-0.387				
		0.750	-0.067**				
		0.820	-0.554				
		0.870	-0.371				
		0.930	-0.266				
		0.960	-0.271				
			Lower Surface				
0.020	-0.932	0.020	-0.279	0.020	-1.382	0.020	-0.505
0.110	-0.434	0.060	-0.673	0.060	-0.439	0.060	-0.027
0.230	-0.141	0.090	-0.475	0.090	-0.274	0.110	-0.292
0.400	-0.011	0.120	-0.268	0.120	-0.300	0.250	-0.280
0.490	0.036	0.200	-0.138	0.200	-0.148	0.400	-0.236
0.630	0.911**	0.260	-0.122	0.250	-0.211	0.490	-0.211
0.750	0.169	0.400	-0.075	0.400	-0.152	0.580	-0.155
0.850	0.196	0.490	-0.027	0.490	-0.067	0.650	0.051
0.900	0.290	0.580	0.031	0.580	-0.042	0.750	0.293
0.960	0.173	0.640	0.228	0.650	-0.073	0.830	0.393
		0.750	0.278	0.750	-0.021	0.900	0.460
		0.870	0.347	0.890	0.420	0.960	0.317
		0.930	0.273	0.930	0.332		
		0.960	0.177	0.960	0.260		
CN =	0.295		0.300		0.313		0.355

Table J-2. Continued.

Flight 211, Wing sweep = 26°, Time = 10-29-3-500, MINF = 0.794, Camber = 5/10, ALPT = 2.93, BETA = 0.54, QINF = 593.2, RNPU = 4.9E+06, CNWP = 0.2350

η = 0.93		0.76		0.59		0.40	
			Upper Surface				
x/c	CP	*x/c*	CP	*x/c*	CP	*x/c*	CP
0.020	0.470	0.000	0.355	0.000	0.568**	0.010	0.117
0.060	0.096	0.020	0.437	0.020	0.370	0.020	0.009
0.110	-0.142	0.040	0.266	0.060	0.552**	0.060	-0.304
0.200	-0.231	0.060	0.012	0.090	-0.230	0.110	-0.508
0.230	-0.249	0.090	-0.140	0.110	-0.363	0.140	-0.629
0.400	-0.192	0.130	-0.301	0.130	-2.265**	0.190	-2.265**
0.490	-0.206	0.150	-0.414	0.150	-0.429	0.250	-0.350
0.590	-0.275	0.200	-0.335	0.210	-0.405	0.400	-0.317
0.630	-0.312	0.250	-0.273	0.250	-0.319	0.490	-0.291
0.700	-0.376	0.260	-0.282	0.340	-0.317	0.580	-0.315
0.750	-0.966	0.280	-0.286	0.370	-0.331	0.650	-0.424
0.810	-0.835	0.290	-0.286	0.400	-0.298	0.700	-0.404
0.840	-0.905	0.310	-0.273	0.410	-0.401**	0.750	-0.444
0.900	-0.193	0.320	-0.285	0.430	-0.329	0.800	-0.275
0.960	-0.130	0.340	-0.280	0.440	-0.318	0.830	-0.674
		0.350	-0.196**	0.460	-0.317	0.900	-0.398
		0.370	-0.273	0.490	-0.296	0.960	-0.383
		0.380	-0.287	0.500	-0.318		
		0.400	-0.256	0.520	-0.324		
		0.410	-0.278	0.540	-0.320		
		0.430	-0.266	0.550	-0.307		
		0.440	-0.257	0.580	-0.311		
		0.460	-0.272	0.600	-0.352		
		0.470	-0.279	0.610	-0.380		
		0.490	-0.287	0.650	-0.519		
		0.500	-0.293	0.700	-0.487		
		0.520	-0.285	0.750	-0.389		
		0.530	-0.294	0.820	-1.013		
		0.550	-0.319	0.890	-0.312		
		0.560	-0.329	0.900	-0.373		
		0.580	-0.299	0.960	-0.283		
		0.590	-0.340				
		0.600	-0.338				
		0.640	-0.477				
		0.700	-0.405				
		0.750	-0.064**				
		0.820	-0.564				
		0.870	-0.383				
		0.930	-0.273				
		0.960	-0.268				
			Lower Surface				
0.020	-0.986	0.020	-0.281	0.020	-1.408	0.020	-0.507
0.110	-0.408	0.060	-0.652	0.060	-0.411	0.060	-0.018
0.230	-0.143	0.090	-0.445	0.090	-0.274	0.110	-0.301
0.400	-0.022	0.120	-0.255	0.120	-0.294	0.250	-0.286
0.490	0.020	0.200	-0.139	0.200	-0.145	0.400	-0.230
0.630	0.927**	0.260	-0.129	0.250	-0.208	0.490	-0.204
0.750	0.160	0.400	-0.083	0.400	-0.147	0.580	-0.150
0.850	0.192	0.490	-0.035	0.490	-0.073	0.650	0.052
0.900	0.285	0.580	0.023	0.580	-0.040	0.750	0.295
0.960	0.173	0.640	0.218	0.650	-0.072	0.830	0.391
		0.750	0.269	0.750	-0.027	0.900	0.456
		0.870	0.354	0.890	0.414	0.960	0.318
		0.930	0.265	0.930	0.331		
		0.960	0.165	0.960	0.238		
CN =	0.291		0.302		0.321		0.356

Table J-2. Continued.

Flight 211, Wing sweep = 26°, Time = 10-29-11-500, MINF = 0.798, Camber = 5/10, ALPT = 4.10, BETA = 0.80, QINF = 597.7, RNPU = 4.9E+06, CNWP = 0.2996

η = 0.93		0.76		0.59		0.40	
			Upper Surface				
x/c	CP	*x/c*	CP	*x/c*	CP	*x/c*	CP
0.020	0.381	0.000	0.517	0.000	0.637**	0.010	-0.052
0.060	0.011	0.020	0.293	0.020	0.218	0.020	-0.179
0.110	-0.212	0.040	0.153	0.060	0.417**	0.060	-0.490
0.200	-0.291	0.060	-0.125	0.090	-0.364	0.110	-0.622
0.230	-0.320	0.090	-0.271	0.110	-0.508	0.140	-0.944
0.400	-0.221	0.130	-0.467	0.130	-2.244**	0.190	-2.244**
0.490	-0.214	0.150	-0.642	0.150	-0.790	0.250	-0.379
0.590	-0.286	0.200	-0.487	0.210	-0.433	0.400	-0.360
0.630	-0.320	0.250	-0.362	0.250	-0.390	0.490	-0.330
0.700	-0.374	0.260	-0.359	0.340	-0.372	0.580	-0.349
0.750	-0.947	0.280	-0.356	0.370	-0.385	0.650	-0.456
0.810	-0.874	0.290	-0.352	0.400	-0.348	0.700	-0.427
0.840	-0.962	0.310	-0.334	0.410	-0.394**	0.750	-0.452
0.900	-0.216	0.320	-0.343	0.430	-0.376	0.800	-0.270
0.960	-0.158	0.340	-0.336	0.440	-0.367	0.830	-0.650
		0.350	-0.184**	0.460	-0.357	0.900	-0.403
		0.370	-0.323	0.490	-0.336	0.960	-0.407
		0.380	-0.334	0.500	-0.362		
		0.400	-0.298	0.520	-0.361		
		0.410	-0.323	0.540	-0.347		
		0.430	-0.300	0.550	-0.331		
		0.440	-0.295	0.580	-0.334		
		0.460	-0.313	0.600	-0.375		
		0.470	-0.325	0.610	-0.407		
		0.490	-0.322	0.650	-0.616		
		0.500	-0.321	0.700	-0.607		
		0.520	-0.311	0.750	-0.398		
		0.530	-0.322	0.820	-0.997		
		0.550	-0.338	0.890	-0.316		
		0.560	-0.353	0.900	-0.374		
		0.580	-0.323	0.960	-0.295		
		0.590	-0.360				
		0.600	-0.355				
		0.640	-0.636				
		0.700	-0.395				
		0.750	-0.037**				
		0.820	-0.568				
		0.870	-0.390				
		0.930	-0.287				
		0.960	-0.287				
			Lower Surface				
0.020	-1.041	0.020	-0.275	0.020	-1.082	0.020	-0.203
0.110	-0.205	0.060	-0.245	0.060	-0.157	0.060	-0.022
0.230	-0.072	0.090	-0.203	0.090	-0.161	0.110	-0.156
0.400	-0.011	0.120	-0.137	0.120	-0.204	0.250	-0.210
0.490	0.027	0.200	-0.071	0.200	-0.076	0.400	-0.185
0.630	0.923**	0.260	-0.089	0.250	-0.149	0.490	-0.170
0.750	0.173	0.400	-0.054	0.400	-0.111	0.580	-0.125
0.850	0.203	0.490	-0.022	0.490	-0.047	0.650	0.072
0.900	0.282	0.580	0.031	0.580	-0.029	0.750	0.317
0.960	0.155	0.640	0.235	0.650	-0.047	0.830	0.417
		0.750	0.298	0.750	-0.018	0.900	0.478
		0.870	0.364	0.890	0.454	0.960	0.323
		0.930	0.288	0.930	0.362		
		0.960	0.182	0.960	0.253		
CN =	0.366		0.420		0.431		0.454

Table J-2. Continued.

Flight 211, Wing sweep = 26°, Time = 10-29-15-500, MINF = 0.797, Camber = 5/10, ALPT = 5.15, BETA = 0.48, QINF = 595.9, RNPU = 4.9E+06, CNWP = 0.3278

η = 0.93		0.76		0.59		0.40	
			Upper Surface				
x/c	CP	*x/c*	CP	*x/c*	CP	*x/c*	CP
0.020	0.277	0.000	0.633	0.000	0.682**	0.010	-0.294
0.060	-0.082	0.020	0.152	0.020	0.049	0.020	-0.315
0.110	-0.323	0.040	0.028	0.060	0.335**	0.060	-0.712
0.200	-0.338	0.060	-0.239	0.090	-0.469	0.110	-0.833
0.230	-0.365	0.090	-0.374	0.110	-0.598	0.140	-0.972
0.400	-0.245	0.130	-0.564	0.130	-2.247**	0.190	-2.247**
0.490	-0.233	0.150	-0.763	0.150	-0.866	0.250	-0.526
0.590	-0.301	0.200	-0.791	0.210	-0.890	0.400	-0.389
0.630	-0.335	0.250	-0.353	0.250	-0.431	0.490	-0.358
0.700	-0.381	0.260	-0.356	0.340	-0.377	0.580	-0.371
0.750	-0.870	0.280	-0.373	0.370	-0.399	0.650	-0.477
0.810	-0.844	0.290	-0.365	0.400	-0.368	0.700	-0.454
0.840	-0.926	0.310	-0.362	0.410	-0.392**	0.750	-0.475
0.900	-0.255	0.320	-0.373	0.430	-0.400	0.800	-0.267
0.960	-0.230	0.340	-0.367	0.440	-0.394	0.830	-0.659
		0.350	-0.181**	0.460	-0.383	0.900	-0.420
		0.370	-0.354	0.490	-0.368	0.960	-0.397
		0.380	-0.364	0.500	-0.385		
		0.400	-0.321	0.520	-0.377		
		0.410	-0.349	0.540	-0.372		
		0.430	-0.331	0.550	-0.358		
		0.440	-0.319	0.580	-0.352		
		0.460	-0.339	0.600	-0.403		
		0.470	-0.364	0.610	-0.421		
		0.490	-0.345	0.650	-0.638		
		0.500	-0.349	0.700	-0.628		
		0.520	-0.336	0.750	-0.457		
		0.530	-0.346	0.820	-0.907		
		0.550	-0.364	0.890	-0.308		
		0.560	-0.378	0.900	-0.364		
		0.580	-0.336	0.960	-0.289		
		0.590	-0.382				
		0.600	-0.362				
		0.640	-0.691				
		0.700	-0.411				
		0.750	-0.024**				
		0.820	-0.572				
		0.870	-0.406				
		0.930	-0.282				
		0.960	-0.288				
			Lower Surface				
0.020	-0.657	0.020	-0.583	0.020	-0.353	0.020	0.100
0.110	-0.165	0.060	-0.106	0.060	-0.048	0.060	-0.018
0.230	-0.024	0.090	-0.116	0.090	-0.066	0.110	-0.054
0.400	0.004	0.120	-0.072	0.120	-0.127	0.250	-0.143
0.490	0.040	0.200	-0.020	0.200	-0.024	0.400	-0.138
0.630	0.930**	0.260	-0.052	0.250	-0.094	0.490	-0.133
0.750	0.177	0.400	-0.032	0.400	-0.075	0.580	-0.097
0.850	0.216	0.490	-0.005	0.490	-0.025	0.650	0.091
0.900	0.294	0.580	0.039	0.580	-0.007	0.750	0.334
0.960	0.146	0.640	0.258	0.650	-0.032	0.830	0.437
		0.750	0.318	0.750	-0.007	0.900	0.494
		0.870	0.402	0.890	0.467	0.960	0.329
		0.930	0.315	0.930	0.370		
		0.960	0.197	0.960	0.269		
CN =	0.410		0.505		0.509		0.547

Table J-2. Continued.

Flight 211, Wing sweep = 26°, Time = 10-29-19-000, MINF = 0.796, Camber = 5/10, ALPT = 5.95, BETA = 0.66, QINF = 593.9, RNPU = 4.9E+06, CNWP = 0.3689

η = 0.93		0.76		0.59		0.40	
			Upper Surface				
x/c	CP	*x/c*	CP	*x/c*	CP	*x/c*	CP
0.020	0.186	0.000	0.736	0.000	0.708**	0.010	-0.444
0.060	-0.163	0.020	0.037	0.020	-0.091	0.020	-0.413
0.110	-0.391	0.040	-0.073	0.060	0.231**	0.060	-0.811
0.200	-0.331	0.060	-0.349	0.090	-0.541	0.110	-0.953
0.230	-0.348	0.090	-0.453	0.110	-0.674	0.140	-1.142
0.400	-0.263	0.130	-0.639	0.130	-2.253**	0.190	-2.253**
0.490	-0.245	0.150	-0.825	0.150	-0.907	0.250	-0.655
0.590	-0.312	0.200	-0.862	0.210	-0.955	0.400	-0.413
0.630	-0.343	0.250	-0.916	0.250	-0.929	0.490	-0.379
0.700	-0.385	0.260	-0.896	0.340	-0.347	0.580	-0.390
0.750	-1.007	0.280	-0.475	0.370	-0.355	0.650	-0.490
0.810	-0.899	0.290	-0.330	0.400	-0.345	0.700	-0.462
0.840	-0.948	0.310	-0.293	0.410	-0.391**	0.750	-0.497
0.900	-0.266	0.320	-0.298	0.430	-0.381	0.800	-0.266
0.960	-0.225	0.340	-0.304	0.440	-0.376	0.830	-0.675
		0.350	-0.136**	0.460	-0.375	0.900	-0.394
		0.370	-0.316	0.490	-0.363	0.960	-0.348
		0.380	-0.340	0.500	-0.382		
		0.400	-0.308	0.520	-0.386		
		0.410	-0.333	0.540	-0.378		
		0.430	-0.323	0.550	-0.363		
		0.440	-0.314	0.580	-0.369		
		0.460	-0.334	0.600	-0.406		
		0.470	-0.346	0.610	-0.430		
		0.490	-0.349	0.650	-0.648		
		0.500	-0.350	0.700	-0.643		
		0.520	-0.344	0.750	-0.491		
		0.530	-0.351	0.820	-0.907		
		0.550	-0.375	0.890	-0.290		
		0.560	-0.389	0.900	-0.335		
		0.580	-0.352	0.960	-0.252		
		0.590	-0.390				
		0.600	-0.382				
		0.640	-0.700				
		0.700	-0.436				
		0.750	-0.017**				
		0.820	-0.576				
		0.870	-0.487				
		0.930	-0.286				
		0.960	-0.282				
			Lower Surface				
0.020	-0.352	0.020	-0.360	0.020	-0.181	0.020	0.225
0.110	-0.140	0.060	-0.016	0.060	0.040	0.060	-0.016
0.230	0.006	0.090	-0.053	0.090	0.009	0.110	0.026
0.400	0.011	0.120	-0.019	0.120	-0.064	0.250	-0.113
0.490	0.034	0.200	0.011	0.200	0.009	0.400	-0.107
0.630	0.935**	0.260	-0.014	0.250	-0.049	0.490	-0.106
0.750	0.177	0.400	-0.012	0.400	-0.046	0.580	-0.073
0.850	0.205	0.490	-0.002	0.490	-0.020	0.650	0.111
0.900	0.297	0.580	0.042	0.580	0.002	0.750	0.354
0.960	0.147	0.640	0.264	0.650	-0.023	0.830	0.444
		0.750	0.320	0.750	0.002	0.900	0.501
		0.870	0.414	0.890	0.473	0.960	0.343
		0.930	0.312	0.930	0.373		
		0.960	0.197	0.960	0.271		
CN =	0.441		0.570		0.573		0.618

Table J-2. Continued.

Flight 211, Wing sweep = 26°, Time = 10-29-28-500, MINF = 0.788, Camber = 5/10, ALPT = 8.13, BETA = 0.74, QINF = 582.1, RNPU = 4.8E+06, CNWP = 0.4656

η = 0.93		0.76		0.59		0.40	
			Upper Surface				
x/c	CP	*x/c*	CP	*x/c*	CP	*x/c*	CP
0.020	-0.178	0.000	0.856	0.000	0.660**	0.010	-0.934
0.060	-0.456	0.020	-0.425	0.020	-0.527	0.020	-1.040
0.110	-0.546	0.040	-0.063	0.060	0.064**	0.060	-1.050
0.200	-0.994	0.060	-0.689	0.090	-0.937	0.110	-1.219
0.230	-0.882	0.090	-0.793	0.110	-0.995	0.140	-1.383
0.400	-0.261	0.130	-0.841	0.130	-2.303**	0.190	-2.303**
0.490	-0.263	0.150	-1.020	0.150	-1.125	0.250	-1.384
0.590	-0.334	0.200	-1.030	0.210	-1.178	0.400	-0.560
0.630	-0.372	0.250	-1.098	0.250	-0.952	0.490	-0.429
0.700	-0.416	0.260	-1.096	0.340	-1.205	0.580	-0.431
0.750	-1.002	0.280	-1.124	0.370	-1.198	0.650	-0.527
0.810	-0.905	0.290	-1.124	0.400	-1.144	0.700	-0.520
0.840	-0.971	0.310	-0.834	0.410	-0.403**	0.750	-0.589
0.900	-0.379	0.320	-1.101	0.430	-0.611	0.800	-0.598
0.960	-0.361	0.340	-0.876	0.440	-0.523	0.830	-0.682
		0.350	-0.430**	0.460	-0.455	0.900	-0.219
		0.370	-0.940	0.490	-0.369	0.960	-0.167
		0.380	-1.131	0.500	-0.350		
		0.400	-0.967	0.520	-0.343		
		0.410	-0.569	0.540	-0.318		
		0.430	-0.388	0.550	-0.307		
		0.440	-0.335	0.580	-0.333		
		0.460	-0.294	0.600	-0.366		
		0.470	-0.268	0.610	-0.379		
		0.490	-0.242	0.650	-0.520		
		0.500	-0.245	0.700	-0.497		
		0.520	-0.234	0.750	-0.441		
		0.530	-0.249	0.820	-0.989		
		0.550	-0.282	0.890	-0.212		
		0.560	-0.308	0.900	-0.240		
		0.580	-0.293	0.960	-0.185		
		0.590	-0.336				
		0.600	-0.339				
		0.640	-0.500				
		0.700	-0.454				
		0.750	-0.002**				
		0.820	-0.578				
		0.870	-0.500				
		0.930	-0.287				
		0.960	-0.282				
			Lower Surface				
0.020	-0.078	0.020	0.065	0.020	0.154	0.020	0.490
0.110	-0.032	0.060	0.185	0.060	0.235	0.060	0.023
0.230	0.108	0.090	0.130	0.090	0.180	0.110	0.198
0.400	0.046	0.120	0.111	0.120	0.090	0.250	0.016
0.490	0.058	0.200	0.110	0.200	0.110	0.400	-0.010
0.630	0.949**	0.260	0.083	0.250	0.066	0.490	-0.017
0.750	0.166	0.400	0.054	0.400	0.039	0.580	0.007
0.850	0.189	0.490	0.060	0.490	0.001	0.650	0.167
0.900	0.274	0.580	0.086	0.580	0.063	0.750	0.396
0.960	0.102	0.640	0.295	0.650	-0.013	0.830	0.479
		0.750	0.335	0.750	0.020	0.900	0.530
		0.870	0.420	0.890	0.501	0.960	0.369
		0.930	0.325	0.930	0.398		
		0.960	0.207	0.960	0.285		
CN =	0.616		0.766		0.786		0.880

Table J-2. Continued.

Flight 211, Wing sweep = 26°, Time = 9-57-50-000, MINF = 0.798, Camber = 5/11, ALPT = 3.16, BETA = 0.25, QINF = 786.2, RNPU = 6.5E+06, CNWP = 0.1765

η = 0.93		0.76		0.59		0.40	
			Upper Surface				
x/c	CP	*x/c*	CP	*x/c*	CP	*x/c*	CP
0.020	0.496	0.000	0.318	0.000	0.526**	0.010	0.092
0.060	0.144	0.020	0.448	0.020	0.378	0.020	-0.013
0.110	-0.114	0.040	0.288	0.060	0.471**	0.060	-0.305
0.200	-0.211	0.060	0.037	0.090	-0.221	0.110	-0.508
0.230	-0.235	0.090	-0.100	0.110	-0.339	0.140	-0.684
0.400	-0.173	0.130	-0.269	0.130	-2.243**	0.190	-2.243**
0.490	-0.183	0.150	-0.388	0.150	-0.404	0.250	-0.343
0.590	-0.253	0.200	-0.316	0.210	-0.387	0.400	-0.312
0.630	-0.290	0.250	-0.260	0.250	-0.307	0.490	-0.286
0.700	-0.345	0.260	-0.261	0.340	-0.305	0.580	-0.304
0.750	-0.792	0.280	-0.268	0.370	-0.311	0.650	-0.417
0.810	-0.732	0.290	-0.268	0.400	-0.289	0.700	-0.392
0.840	-0.753	0.310	-0.255	0.410	-0.799**	0.750	-0.407
0.900	-0.212	0.320	-0.261	0.430	-0.313	0.800	-0.721
0.960	-0.150	0.340	-0.262	0.440	-0.307	0.830	-0.719
		0.350	-0.206**	0.460	-0.305	0.900	-0.406
		0.370	-0.257	0.490	-0.274	0.960	-0.383
		0.380	-0.264	0.500	-0.308		
		0.400	-0.232	0.520	-0.309		
		0.410	-0.265	0.540	-0.305		
		0.430	-0.251	0.550	-0.288		
		0.440	-0.246	0.580	-0.295		
		0.460	-0.256	0.600	-0.331		
		0.470	-0.280	0.610	-0.357		
		0.490	-0.267	0.650	-0.495		
		0.500	-0.274	0.700	-0.430		
		0.520	-0.270	0.750	-0.340		
		0.530	-0.278	0.820	-0.857		
		0.550	-0.302	0.890	-0.303		
		0.560	-0.311	0.900	-0.387		
		0.580	-0.283	0.960	-0.302		
		0.590	-0.318				
		0.600	-0.320				
		0.640	-0.450				
		0.700	-0.363				
		0.750	-0.080**				
		0.820	-0.595				
		0.870	-0.404				
		0.930	-0.295				
		0.960	-0.301				
			Lower Surface				
0.020	-0.968	0.020	-0.741	0.020	-1.402	0.020	-0.422
0.110	-0.485	0.060	-0.711	0.060	-0.515	0.060	-0.039
0.230	-0.169	0.090	-0.567	0.090	-0.299	0.110	-0.301
0.400	-0.030	0.120	-0.377	0.120	-0.274	0.250	-0.290
0.490	0.013	0.200	-0.176	0.200	-0.167	0.400	-0.248
0.630	0.344**	0.260	-0.153	0.250	-0.224	0.490	-0.219
0.750	0.154	0.400	-0.083	0.400	-0.165	0.580	-0.171
0.850	0.171	0.490	-0.036	0.490	-0.086	0.650	0.040
0.900	0.233	0.580	0.026	0.580	-0.053	0.750	0.285
0.960	0.138	0.640	0.220	0.650	-0.082	0.830	0.390
		0.750	0.262	0.750	-0.036	0.900	0.445
		0.870	0.330	0.890	0.420	0.960	0.314
		0.930	0.257	0.930	0.335		
		0.960	0.160	0.960	0.262		
CN =	0.232		0.270		0.283		0.363

Table J-2. Continued.

Flight 211, Wing sweep = 26°, Time = 9-58-1-500, MINF = 0.812, Camber = 5/10, ALPT = 5.23, BETA = 0.22, QINF = 811.0, RNPU = 6.6E+06, CNWP = 0.3021

η = 0.93		0.76		0.59		0.40	
			Upper Surface				
x/c	CP	*x/c*	CP	*x/c*	CP	*x/c*	CP
0.020	0.335	0.000	0.578	0.000	0.554**	0.010	-0.220
0.060	-0.031	0.020	0.239	0.020	0.127	0.020	-0.282
0.110	-0.286	0.040	0.049	0.060	0.254**	0.060	-0.666
0.200	-0.313	0.060	-0.174	0.090	-0.399	0.110	-0.789
0.230	-0.350	0.090	-0.314	0.110	-0.535	0.140	-0.952
0.400	-0.229	0.130	-0.511	0.130	-2.167**	0.190	-2.167**
0.490	-0.217	0.150	-0.703	0.150	-0.810	0.250	-0.645
0.590	-0.283	0.200	-0.734	0.210	-0.839	0.400	-0.367
0.630	-0.309	0.250	-0.305	0.250	-0.707	0.490	-0.342
0.700	-0.339	0.260	-0.321	0.340	-0.337	0.580	-0.357
0.750	-0.765	0.280	-0.339	0.370	-0.366	0.650	-0.452
0.810	-0.676	0.290	-0.344	0.400	-0.343	0.700	-0.421
0.840	-0.728	0.310	-0.337	0.410	-0.767**	0.750	-0.427
0.900	-0.243	0.320	-0.349	0.430	-0.377	0.800	-0.691
0.960	-0.227	0.340	-0.344	0.440	-0.366	0.830	-0.662
		0.350	-0.186**	0.460	-0.361	0.900	-0.429
		0.370	-0.331	0.490	-0.325	0.960	-0.419
		0.380	-0.341	0.500	-0.360		
		0.400	-0.304	0.520	-0.354		
		0.410	-0.330	0.540	-0.350		
		0.430	-0.309	0.550	-0.331		
		0.440	-0.299	0.580	-0.330		
		0.460	-0.320	0.600	-0.367		
		0.470	-0.330	0.610	-0.388		
		0.490	-0.323	0.650	-0.631		
		0.500	-0.320	0.700	-0.609		
		0.520	-0.314	0.750	-0.419		
		0.530	-0.322	0.820	-0.823		
		0.550	-0.342	0.890	-0.333		
		0.560	-0.346	0.900	-0.426		
		0.580	-0.313	0.960	-0.324		
		0.590	-0.347				
		0.600	-0.340				
		0.640	-0.639				
		0.700	-0.411				
		0.750	-0.046**				
		0.820	-0.590				
		0.870	-0.412				
		0.930	-0.289				
		0.960	-0.293				
			Lower Surface				
0.020	-0.921	0.020	-0.710	0.020	-0.551	0.020	0.063
0.110	-0.190	0.060	-0.231	0.060	-0.101	0.060	-0.025
0.230	-0.064	0.090	-0.171	0.090	-0.106	0.110	-0.082
0.400	-0.010	0.120	-0.109	0.120	-0.134	0.250	-0.181
0.490	0.015	0.200	-0.062	0.200	-0.060	0.400	-0.172
0.630	0.347**	0.260	-0.079	0.250	-0.134	0.490	-0.166
0.750	0.164	0.400	-0.062	0.400	-0.104	0.580	-0.132
0.850	0.193	0.490	-0.029	0.490	-0.051	0.650	0.073
0.900	0.265	0.580	0.021	0.580	-0.038	0.750	0.318
0.960	0.131	0.640	0.238	0.650	-0.051	0.830	0.418
		0.750	0.292	0.750	-0.031	0.900	0.477
		0.870	0.369	0.890	0.454	0.960	0.326
		0.930	0.289	0.930	0.355		
		0.960	0.178	0.960	0.275		
CN =	0.347		0.449		0.478		0.538

Table J-2. Continued.

Flight 211, Wing sweep = 26°, Time = 9-58-4-500, MINF = 0.805, Camber = 5/10, ALPT = 5.81, BETA = 0.43, QINF = 793.8, RNPU = 6.5E+06, CNWP = 0.2369

η = 0.93		0.76		0.59		0.40	
			Upper Surface				
x/c	CP	*x/c*	CP	*x/c*	CP	*x/c*	CP
0.020	0.254	0.000	0.660	0.000	0.582**	0.010	-0.380
0.060	-0.099	0.020	3.457	0.020	-0.016	0.020	-0.375
0.110	-0.346	0.040	-0.007	0.060	0.170**	0.060	-0.745
0.200	-0.289	0.060	-2.914	0.090	-0.483	0.110	-0.895
0.230	-0.363	0.090	-0.391	0.110	-0.608	0.140	-1.086
0.400	-0.252	0.130	-0.582	0.130	-2.206**	0.190	-2.206**
0.490	-0.234	0.150	-0.772	0.150	-0.860	0.250	-0.611
0.590	-0.302	0.200	-0.803	0.210	-0.904	0.400	-0.399
0.630	-0.326	0.250	-0.841	0.250	-0.722	0.490	-0.360
0.700	-0.357	0.260	-0.767	0.340	-0.326	0.580	-0.387
0.750	-0.780	0.280	-0.348	0.370	-0.343	0.650	-0.470
0.810	-0.709	0.290	-0.289	0.400	-0.327	0.700	-0.443
0.840	-0.736	0.310	-0.279	0.410	-0.777**	0.750	-0.450
0.900	-0.264	0.320	-0.294	0.430	-0.369	0.800	-0.699
0.960	-0.241	0.340	-0.308	0.440	-0.362	0.830	-0.742
		0.350	-0.150**	0.460	-0.360	0.900	-0.444
		0.370	-0.319	0.490	-0.341	0.960	-0.382
		0.380	-0.335	0.500	-0.366		
		0.400	-0.299	0.520	-0.360		
		0.410	-0.325	0.540	-0.356		
		0.430	-0.308	0.550	-0.345		
		0.440	-0.305	0.580	-0.335		
		0.460	-0.324	0.600	-0.381		
		0.470	-0.352	0.610	-0.405		
		0.490	-0.336	0.650	-0.655		
		0.500	-0.337	0.700	-0.628		
		0.520	-1.325	0.750	-0.432		
		0.530	-0.337	0.820	-0.833		
		0.550	1.061	0.890	-0.331		
		0.560	-0.360	0.900	0.068		
		0.580	-0.328	0.960	-0.303		
		0.590	-0.359				
		0.600	-0.350				
		0.640	-0.645				
		0.700	-0.415				
		0.750	-0.036**				
		0.820	-0.601				
		0.870	-0.438				
		0.930	-0.295				
		0.960	-0.297				
			Lower Surface				
0.020	-0.754	0.020	-0.506	0.020	-0.280	0.020	0.014
0.110	-0.177	0.060	-0.096	0.060	-0.017	0.060	-0.732
0.230	-0.022	0.090	-0.106	0.090	-0.042	0.110	-0.008
0.400	-0.003	0.120	-0.066	0.120	-0.077	0.250	0.399
0.490	0.017	0.200	-0.030	0.200	-0.026	0.400	-0.140
0.630	0.361**	0.260	-0.051	0.250	-0.092	0.490	-0.132
0.750	0.174	0.400	-0.044	0.400	-0.073	0.580	-0.101
0.850	0.204	0.490	-0.019	0.490	-0.039	0.650	0.096
0.900	0.282	0.580	0.030	0.580	-0.017	0.750	0.334
0.960	0.138	0.640	0.253	0.650	-0.050	0.830	0.435
		0.750	0.304	0.750	-0.031	0.900	0.487
		0.870	0.396	0.890	0.468	0.960	0.332
		0.930	0.303	0.930	0.362		
		0.960	0.186	0.960	0.282		
CN =	0.380		0.501		0.507		0.637

Table J-2. Continued.

Flight 223, Wing sweep = 26°, Time = 9-2-37-500, MINF = 0.856, Camber = 0/2, ALPT = 4.02, BETA = 0.54, QINF = 595.5, RNPU = 4.7E+06, CNWP = 0.1865

η = 0.93		0.76		0.59		0.40	
			Upper Surface				
x/c	CP	*x/c*	CP	*x/c*	CP	*x/c*	CP
0.020	0.069	0.000	0.851	0.000	2.048**	0.010	-0.663
0.060	-0.096	0.020	-0.144	0.020	-0.271	0.020	-0.720
0.110	-0.180	0.040	-0.176	0.060	-1.705**	0.060	-0.592
0.200	-0.187	0.060	-0.264	0.090	-0.533	0.110	-0.572
0.230	-0.251	0.090	-0.235	0.110	-0.228	0.140	-0.608
0.400	-0.179	0.130	-0.257	0.130	-0.286	0.190	-1.951**
0.490	-0.181	0.150	-0.300	0.150	-0.310	0.250	-0.248
0.590	-0.244	0.200	-0.306	0.210	-0.397	0.400	-0.328
0.630	-0.271	0.250	-0.285	0.250	-0.402	0.490	-0.278
0.700	-0.233	0.260	-0.287	0.340	-0.281	0.580	-0.277
0.750	-0.241	0.280	-0.306	0.370	-0.316	0.650	-0.392
0.810	-0.207	0.290	-0.311	0.400	-0.323	0.700	-0.351
0.840	-0.213	0.310	-0.301	0.410	-0.596**	0.750	-0.397
0.900	-0.084	0.320	-0.307	0.430	-0.323	0.800	-0.535**
0.960	0.040	0.340	-0.295	0.440	-0.312	0.830	-0.570
		0.350	-0.296**	0.460	-0.308	0.900	-0.150
		0.370	-0.267	0.490	-0.241	0.960	0.024
		0.380	-0.287	0.500	-0.301		
		0.400	-0.242	0.520	-0.297		
		0.410	-0.278	0.540	-0.283		
		0.430	-0.257	0.550	-0.245		
		0.440	-0.242	0.580	-0.239		
		0.460	-0.261	0.600	-0.286		
		0.470	-0.275	0.610	-0.303		
		0.490	-0.262	0.650	1.034**		
		0.500	-0.263	0.700	-0.521		
		0.520	-0.263	0.750	-0.453		
		0.530	-0.271	0.820	-0.512**		
		0.550	-0.298	0.890	-0.081		
		0.560	-0.295	0.900	-0.041		
		0.580	-0.260	0.960	0.056		
		0.590	-0.302				
		0.600	-0.289				
		0.640	-0.510				
		0.700	-0.439				
		0.750	-0.068**				
		0.820	-0.264				
		0.870	-0.206				
		0.930	-0.058				
		0.960	0.007				
			Lower Surface				
0.020	-0.892	0.020	-0.483	0.020	-0.197	0.020	0.222
0.110	-0.523	0.060	-0.207	0.060	-0.090	0.060	1.249**
0.230	-0.224	0.090	-0.232	0.090	0.867**	0.110	-0.178
0.400	-0.115	0.120	-0.302	0.120	-0.215	0.250	-0.349
0.490	-0.092	0.200	-0.497	0.200	-0.354	0.400	-0.351
0.630	0.918**	0.260	-0.347	0.250	-0.406	0.490	-0.410
0.750	0.048	0.400	-0.218	0.400	-0.302	0.580	-0.372
0.850	0.119	0.490	-0.197	0.490	-0.095	0.650	-0.145
0.900	0.206	0.580	-0.173	0.580	-0.256	0.750	0.109
0.960	0.197	0.640	0.030	0.650	-0.073	0.830	0.275
		0.750	0.190	0.750	-0.054	0.900	0.318
		0.870	0.269	0.890	0.311	0.960	0.282
		0.930	0.232	0.930	0.263		
		0.960	0.188	0.960	-0.732**		
CN =	0.083		0.176		0.181		0.223

Table J-2. Continued.

Flight 223, Wing sweep = 26°, Time = 9-2-45-000, MINF = 0.863, Camber = 0/2, ALPT = 5.21, BETA = 0.80, QINF = 605.2, RNPU = 4.7E+06, CNWP = 0.2049

η = 0.93		0.76		0.59		0.40	
			Upper Surface				
x/c	CP	*x/c*	CP	*x/c*	CP	*x/c*	CP
0.020	-0.149	0.000	0.876	0.000	2.015**	0.010	-0.676
0.060	-0.377	0.020	-0.450	0.020	-0.441	0.020	-0.861
0.110	-0.407	0.040	-0.354	0.060	-1.678**	0.060	-0.777
0.200	-0.245	0.060	-0.536	0.090	-0.688	0.110	-0.736
0.230	-0.406	0.090	-0.564	0.110	-0.683	0.140	-0.774
0.400	-0.199	0.130	-0.581	0.130	-0.659	0.190	-1.920**
0.490	-0.204	0.150	-0.558	0.150	-0.604	0.250	-0.798
0.590	-0.254	0.200	-0.477	0.210	-0.642	0.400	-0.668
0.630	-0.280	0.250	-0.597	0.250	-0.668	0.490	-0.263
0.700	-0.276	0.260	-0.613	0.340	-0.725	0.580	-0.275
0.750	-0.243	0.280	-0.612	0.370	-0.739	0.650	-0.374
0.810	-0.230	0.290	-0.590	0.400	-0.699	0.700	-0.348
0.840	-0.222	0.310	-0.572	0.410	-0.587**	0.750	-0.383
0.900	-0.102	0.320	-0.581	0.430	-0.297	0.800	-0.519**
0.960	0.021	0.340	-0.608	0.440	-0.218	0.830	-0.542
		0.350	-0.389**	0.460	-0.194	0.900	-0.138
		0.370	-0.443	0.490	-0.178	0.960	0.026
		0.380	-0.231	0.500	-0.195		
		0.400	-0.116	0.520	-0.201		
		0.410	-0.164	0.540	-0.205		
		0.430	-0.157	0.550	-0.192		
		0.440	-0.160	0.580	-0.200		
		0.460	-0.188	0.600	-0.248		
		0.470	-0.214	0.610	-0.273		
		0.490	-0.215	0.650	1.016**		
		0.500	-0.226	0.700	-0.491		
		0.520	-0.232	0.750	-0.423		
		0.530	-0.241	0.820	-0.539**		
		0.550	-0.274	0.890	-0.086		
		0.560	-0.280	0.900	-0.046		
		0.580	-0.257	0.960	0.053		
		0.590	-0.297				
		0.600	-0.285				
		0.640	-0.500				
		0.700	-0.436				
		0.750	-0.072**				
		0.820	-0.299				
		0.870	-0.204				
		0.930	-0.064				
		0.960	-0.001				
			Lower Surface				
0.020	-0.378	0.020	-0.194	0.020	-0.025	0.020	0.427
0.110	-0.368	0.060	-0.077	0.060	0.017	0.060	1.227**
0.230	-0.119	0.090	-0.123	0.090	0.853**	0.110	-0.068
0.400	-0.086	0.120	-0.201	0.120	-0.127	0.250	-0.275
0.490	-0.095	0.200	-0.241	0.200	-0.239	0.400	-0.277
0.630	0.903**	0.260	-0.267	0.250	-0.292	0.490	-0.352
0.750	0.030	0.400	-0.208	0.400	-0.276	0.580	-0.376
0.850	0.095	0.490	-0.196	0.490	-0.087	0.650	-0.141
0.900	0.184	0.580	-0.178	0.580	-0.257	0.750	0.113
0.960	0.175	0.640	0.025	0.650	-0.069	0.830	0.280
		0.750	0.192	0.750	-0.051	0.900	0.323
		0.870	0.265	0.890	0.309	0.960	0.275
		0.930	0.235	0.930	0.261		
		0.960	0.184	0.960	-0.722**		
CN =	0.178		0.306		0.309		0.404

Table J-2. Continued.

Flight 223, Wing sweep = 26°, Time = 9-2-50-000, MINF = 0.860, Camber = 0/2, ALPT = 6.06, BETA = 0.77, QINF = 600.1, RNPU = 4.7E+06, CNWP = 0.2962

η = 0.93		0.76		0.59		0.40	
			Upper Surface				
x/c	CP	*x/c*	CP	*x/c*	CP	*x/c*	CP
0.020	-0.228	0.000	0.861	0.000	2.037**	0.010	-0.811
0.060	-0.577	0.020	-0.467	0.020	-0.702	0.020	-0.884
0.110	-0.555	0.040	-0.600	0.060	-1.687**	0.060	-0.882
0.200	-0.405	0.060	-0.651	0.090	-0.781	0.110	-0.825
0.230	-0.422	0.090	-0.654	0.110	-0.772	0.140	-0.855
0.400	-0.176	0.130	-0.694	0.130	-0.765	0.190	-1.931**
0.490	-0.154	0.150	-0.682	0.150	-0.700	0.250	-0.886
0.590	-0.225	0.200	-0.606	0.210	-0.734	0.400	-0.716
0.630	-0.250	0.250	-0.704	0.250	-0.783	0.490	-0.570
0.700	-0.237	0.260	-0.707	0.340	-0.823	0.580	-0.465
0.750	-0.251	0.280	-0.725	0.370	-0.826	0.650	-0.330
0.810	-0.204	0.290	-0.733	0.400	-0.762	0.700	-0.309
0.840	-0.229	0.310	-0.715	0.410	-0.586**	0.750	-0.319
0.900	-0.126	0.320	-0.724	0.430	-0.819	0.800	-0.321**
0.960	-0.001	0.340	-0.734	0.440	-0.809	0.830	-0.250
		0.350	-0.408**	0.460	-0.766	0.900	-0.116
		0.370	-0.726	0.490	-0.780	0.960	0.038
		0.380	-0.761	0.500	-0.838		
		0.400	-0.731	0.520	-0.828		
		0.410	-0.726	0.540	-0.718		
		0.430	-0.708	0.550	-0.405		
		0.440	-0.698	0.580	-0.223		
		0.460	-0.749	0.600	-0.208		
		0.470	-0.748	0.610	-0.182		
		0.490	-0.726	0.650	1.031**		
		0.500	-0.402	0.700	-0.226		
		0.520	-0.233	0.750	-0.223		
		0.530	-0.146	0.820	-0.279**		
		0.550	-0.130	0.890	-0.087		
		0.560	-0.128	0.900	-0.049		
		0.580	-0.114	0.960	0.054		
		0.590	-0.152				
		0.600	-0.144				
		0.640	-0.258				
		0.700	-0.251				
		0.750	-0.060**				
		0.820	-0.273				
		0.870	-0.231				
		0.930	-0.066				
		0.960	-0.002				
			Lower Surface				
0.020	-0.178	0.020	-0.039	0.020	0.105	0.020	0.483
0.110	-0.250	0.060	0.005	0.060	0.099	0.060	1.244**
0.230	-0.113	0.090	-0.049	0.090	0.866**	0.110	0.008
0.400	-0.096	0.120	-0.132	0.120	-0.058	0.250	-0.207
0.490	-0.079	0.200	-0.128	0.200	-0.154	0.400	-0.219
0.630	0.916**	0.260	-0.199	0.250	-0.212	0.490	-0.271
0.750	0.022	0.400	-0.174	0.400	-0.218	0.580	-0.346
0.850	0.085	0.490	-0.175	0.490	-0.075	0.650	-0.124
0.900	0.172	0.580	-0.167	0.580	-0.228	0.750	0.129
0.960	0.161	0.640	0.036	0.650	-0.064	0.830	0.296
		0.750	0.188	0.750	-0.046	0.900	0.334
		0.870	0.269	0.890	0.319	0.960	0.283
		0.930	0.232	0.930	0.269		
		0.960	0.186	0.960	-0.722**		
CN =	0.215		0.412		0.420		0.488

Table J-2. Continued.

Flight 223, Wing sweep = 26°, Time = 9-2-53-500, MINF = 0.862, Camber = 0/2, ALPT = 7.29, BETA = 0.77, QINF = 603.3, RNPU = 4.7E+06, CNWP = 0.4023

η = 0.93		0.76		0.59		0.40	
			Upper Surface				
x/c	CP	*x/c*	CP	*x/c*	CP	*x/c*	CP
0.020	-0.713	0.000	0.830	0.000	2.027**	0.010	-0.890
0.060	-0.667	0.020	-0.747	0.020	-0.824	0.020	-1.013
0.110	-0.672	0.040	-0.682	0.060	-1.677**	0.060	-0.992
0.200	-0.591	0.060	-0.778	0.090	-0.881	0.110	-0.908
0.230	-0.502	0.090	-0.778	0.110	-0.881	0.140	-0.930
0.400	-0.593	0.130	-0.810	0.130	-0.884	0.190	-1.920**
0.490	-0.437	0.150	-0.809	0.150	-0.813	0.250	-0.974
0.590	-0.184	0.200	-0.741	0.210	-0.832	0.400	-0.770
0.630	-0.212	0.250	-0.788	0.250	-0.864	0.490	-0.688
0.700	-0.206	0.260	-0.796	0.340	-0.923	0.580	-0.561
0.750	-0.234	0.280	-0.816	0.370	-0.926	0.650	-0.621
0.810	-0.210	0.290	-0.829	0.400	-0.897	0.700	-0.600
0.840	-0.220	0.310	-0.803	0.410	-0.583**	0.750	-0.622
0.900	-0.148	0.320	-0.819	0.430	-0.911	0.800	-0.189**
0.960	-0.029	0.340	-0.828	0.440	-0.899	0.830	-0.144
		0.350	-0.421**	0.460	-0.762	0.900	-0.032
		0.370	-0.819	0.490	-0.866	0.960	0.025
		0.380	-0.870	0.500	-0.909		
		0.400	-0.808	0.520	-0.907		
		0.410	-0.841	0.540	-0.913		
		0.430	-0.813	0.550	-0.872		
		0.440	-0.820	0.580	-0.856		
		0.460	-0.845	0.600	-0.889		
		0.470	-0.843	0.610	-0.856		
		0.490	-0.830	0.650	1.025**		
		0.500	-0.836	0.700	-0.374		
		0.520	-0.817	0.750	-0.233		
		0.530	-0.809	0.820	-0.131**		
		0.550	-0.842	0.890	-0.022		
		0.560	-0.850	0.900	0.010		
		0.580	-0.825	0.960	0.078		
		0.590	-0.854				
		0.600	-0.702				
		0.640	-0.158				
		0.700	-0.127				
		0.750	-0.054**				
		0.820	-0.180				
		0.870	-0.173				
		0.930	-0.040				
		0.960	0.022				
			Lower Surface				
0.020	-0.029	0.020	0.104	0.020	0.213	0.020	0.603
0.110	-0.189	0.060	0.091	0.060	0.177	0.060	1.237**
0.230	-0.125	0.090	0.024	0.090	0.861**	0.110	0.068
0.400	-0.096	0.120	-0.059	0.120	0.011	0.250	-0.142
0.490	-0.086	0.200	-0.076	0.200	-0.078	0.400	-0.171
0.630	0.911**	0.260	-0.148	0.250	-0.149	0.490	-0.236
0.750	0.013	0.400	-0.147	0.400	-0.177	0.580	-0.334
0.850	0.065	0.490	-0.157	0.490	-0.063	0.650	-0.119
0.900	0.148	0.580	-0.156	0.580	-0.212	0.750	0.134
0.960	0.146	0.640	0.042	0.650	-0.056	0.830	0.299
		0.750	0.187	0.750	-0.045	0.900	0.337
		0.870	0.245	0.890	0.321	0.960	0.276
		0.930	0.231	0.930	0.272		
		0.960	0.187	0.960	-0.718**		
CN =	0.325		0.537		0.568		0.609

Table J-2. Continued.

Flight 223, Wing sweep = 26°, Time = 9-2-57-500, MINF = 0.859, Camber = 0/2, ALPT = 8.07, BETA = 0.83, QINF = 601.1, RNPU = 4.7E+06, CNWP = 0.4515

η = 0.93		0.76		0.59		0.40	
			Upper Surface				
x/c	CP	*x/c*	CP	*x/c*	CP	*x/c*	CP
0.020	-0.790	0.000	0.795	0.000	2.026**	0.010	-0.974
0.060	-0.782	0.020	-0.840	0.020	-0.905	0.020	-1.087
0.110	-0.799	0.040	-0.793	0.060	-1.692**	0.060	-1.055
0.200	-0.706	0.060	-0.868	0.090	-0.969	0.110	-0.996
0.230	-0.601	0.090	-0.871	0.110	-0.959	0.140	-1.039
0.400	-0.668	0.130	-0.883	0.130	-0.951	0.190	-1.936**
0.490	-0.598	0.150	-0.894	0.150	-0.882	0.250	-1.051
0.590	-0.182	0.200	-0.835	0.210	-0.907	0.400	-0.834
0.630	-0.194	0.250	-0.873	0.250	-0.921	0.490	-0.719
0.700	-0.193	0.260	-0.876	0.340	-1.003	0.580	-0.633
0.750	-0.226	0.280	-0.901	0.370	-0.998	0.650	-0.676
0.810	-0.205	0.290	-0.910	0.400	-0.964	0.700	-0.645
0.840	-0.219	0.310	-0.856	0.410	-0.593**	0.750	-0.589
0.900	-0.166	0.320	-0.895	0.430	-0.991	0.800	-0.211**
0.960	-0.048	0.340	-0.902	0.440	-0.977	0.830	-0.141
		0.350	-0.435**	0.460	-0.773	0.900	-0.048
		0.370	-0.894	0.490	-0.931	0.960	-0.001
		0.380	-0.943	0.500	-0.985		
		0.400	-0.869	0.520	-0.993		
		0.410	-0.880	0.540	-0.995		
		0.430	-0.895	0.550	-0.951		
		0.440	-0.829	0.580	-0.916		
		0.460	-0.930	0.600	-0.957		
		0.470	-0.910	0.610	-0.940		
		0.490	-0.903	0.650	1.021**		
		0.500	-0.912	0.700	-0.431		
		0.520	-0.896	0.750	-0.336		
		0.530	-0.881	0.820	-0.128**		
		0.550	-0.913	0.890	-0.003		
		0.560	-0.923	0.900	0.026		
		0.580	-0.895	0.960	0.076		
		0.590	-0.943				
		0.600	-0.915				
		0.640	-0.249				
		0.700	-0.186				
		0.750	-0.040**				
		0.820	-0.130				
		0.870	-0.129				
		0.930	-0.017				
		0.960	0.035				
			Lower Surface				
0.020	0.055	0.020	0.214	0.020	0.301	0.020	0.663
0.110	-0.140	0.060	0.163	0.060	0.225	0.060	1.234**
0.230	-0.103	0.090	0.084	0.090	0.856**	0.110	0.142
0.400	-0.092	0.120	0.000	0.120	0.054	0.250	-0.096
0.490	-0.087	0.200	-0.032	0.200	0.001	0.400	-0.133
0.630	0.907**	0.260	-0.102	0.250	-0.097	0.490	-0.198
0.750	0.003	0.400	-0.117	0.400	-0.145	0.580	-0.295
0.850	0.054	0.490	-0.140	0.490	-0.050	0.650	-0.113
0.900	0.142	0.580	-0.149	0.580	-0.199	0.750	0.143
0.960	0.135	0.640	0.041	0.650	-0.043	0.830	0.301
		0.750	0.187	0.750	-0.034	0.900	0.336
		0.870	0.254	0.890	0.318	0.960	0.267
		0.930	0.227	0.930	0.260		
		0.960	0.187	0.960	-0.729**		
CN =	0.387		0.614		0.650		0.685

Table J-2. Continued.

Flight 223, Wing sweep = 26°, Time = 9-3-3-500, MINF = 0.857, Camber = 0/2, ALPT = 9.22, BETA = 0.83, QINF = 606.2, RNPU = 4.8E+06, CNWP = 0.4920

η = 0.93		0.76		0.59		0.40	
			Upper Surface				
x/c	CP	*x/c*	CP	*x/c*	CP	*x/c*	CP
0.020	-0.904	0.000	0.728	0.000	1.983**	0.010	-1.100
0.060	-0.919	0.020	-0.964	0.020	-1.010	0.020	-1.181
0.110	-0.862	0.040	-0.912	0.060	-1.703**	0.060	-1.171
0.200	-0.798	0.060	-0.966	0.090	-1.054	0.110	-1.113
0.230	-0.696	0.090	-0.978	0.110	-1.057	0.140	-1.140
0.400	-0.742	0.130	-0.902	0.130	-1.056	0.190	-1.945**
0.490	-0.703	0.150	-0.979	0.150	-0.977	0.250	-1.148
0.590	-0.167	0.200	-0.922	0.210	-0.997	0.400	-0.902
0.630	-0.180	0.250	-0.956	0.250	-0.966	0.490	-0.769
0.700	-0.196	0.260	-0.961	0.340	-1.096	0.580	-0.700
0.750	-0.256	0.280	-0.978	0.370	-1.089	0.650	-0.731
0.810	-0.236	0.290	-0.991	0.400	-1.045	0.700	-0.697
0.840	-0.259	0.310	-0.875	0.410	-1.009**	0.750	-0.471
0.900	-0.205	0.320	-0.983	0.430	-1.099	0.800	-0.248**
0.960	-0.073	0.340	-0.929	0.440	-1.076	0.830	-0.179
		0.350	-0.454**	0.460	-0.792	0.900	-0.100
		0.370	-0.962	0.490	-1.029	0.960	-0.044
		0.380	-1.036	0.500	-1.066		
		0.400	-0.960	0.520	-1.071		
		0.410	-0.899	0.540	-1.071		
		0.430	-0.975	0.550	-1.033		
		0.440	-0.848	0.580	-1.020		
		0.460	-1.018	0.600	-1.064		
		0.470	-1.008	0.610	-0.869		
		0.490	-0.987	0.650	0.987**		
		0.500	-0.997	0.700	-0.405		
		0.520	-0.894	0.750	-0.400		
		0.530	-0.511	0.820	-0.290**		
		0.550	-0.474	0.890	-0.116		
		0.560	-0.446	0.900	-0.122		
		0.580	-0.416	0.960	-0.054		
		0.590	-0.429				
		0.600	-0.396				
		0.640	-0.345				
		0.700	-0.347				
		0.750	-0.037**				
		0.820	-0.192				
		0.870	-0.162				
		0.930	-0.155				
		0.960	-0.144				
			Lower Surface				
0.020	0.131	0.020	0.334	0.020	0.404	0.020	0.729
0.110	-0.086	0.060	0.229	0.060	0.301	0.060	1.197**
0.230	-0.081	0.090	0.151	0.090	0.823**	0.110	0.201
0.400	-0.092	0.120	0.059	0.120	0.123	0.250	-0.040
0.490	-0.092	0.200	0.021	0.200	0.087	0.400	-0.090
0.630	0.894**	0.260	-0.052	0.250	-0.041	0.490	-0.161
0.750	-0.015	0.400	-0.093	0.400	-0.105	0.580	-0.265
0.850	0.037	0.490	-0.127	0.490	-0.044	0.650	-0.105
0.900	0.126	0.580	-0.153	0.580	-0.188	0.750	0.142
0.960	0.115	0.640	0.028	0.650	-0.040	0.830	0.300
		0.750	0.164	0.750	-0.025	0.900	0.329
		0.870	0.246	0.890	0.294	0.960	0.249
		0.930	0.168	0.930	0.231		
		0.960	0.106	0.960	-0.748**		
CN =	0.445		0.660		0.739		0.768

Table J-2. Continued.

Flight 223, Wing sweep = 26°, Time = 9-3-15-000, MINF = 0.848, Camber = 0/2, ALPT = 9.91, BETA = 0.66, QINF = 610.5, RNPU = 4.8E+06, CNWP = 0.4793

η = 0.93		0.76		0.59		0.40	
			Upper Surface				
x/c	CP	*x/c*	CP	*x/c*	CP	*x/c*	CP
0.020	-1.042	0.000	0.636	0.000	1.913**	0.010	-1.216
0.060	-1.023	0.020	-1.087	0.020	-1.152	0.020	-1.275
0.110	-1.032	0.040	-0.944	0.060	-1.748**	0.060	-1.265
0.200	-0.887	0.060	-1.081	0.090	-1.170	0.110	-1.216
0.230	-0.791	0.090	-1.079	0.110	-1.147	0.140	-1.228
0.400	-0.848	0.130	-0.952	0.130	-1.159	0.190	-1.988**
0.490	-0.285	0.150	-1.047	0.150	-1.074	0.250	-1.233
0.590	-0.174	0.200	-1.013	0.210	-1.095	0.400	-0.949
0.630	-0.234	0.250	-1.062	0.250	-1.015	0.490	-0.796
0.700	-0.243	0.260	-1.055	0.340	-1.170	0.580	-0.695
0.750	-0.277	0.280	-1.078	0.370	-1.177	0.650	-0.481
0.810	-0.269	0.290	-1.091	0.400	-1.135	0.700	-0.438
0.840	-0.290	0.310	-0.925	0.410	-1.059**	0.750	-0.290
0.900	-0.204	0.320	-1.069	0.430	-0.988	0.800	-0.191**
0.960	-0.103	0.340	-0.864	0.440	-0.805	0.830	-0.182
		0.350	-0.356**	0.460	-0.699	0.900	-0.104
		0.370	-0.914	0.490	-0.614	0.960	-0.067
		0.380	-0.823	0.500	-0.596		
		0.400	-0.722	0.520	-0.592		
		0.410	-0.594	0.540	-0.582		
		0.430	-0.584	0.550	-0.556		
		0.440	-0.480	0.580	-0.539		
		0.460	-0.532	0.600	-0.554		
		0.470	-0.518	0.610	-0.532		
		0.490	-0.461	0.650	0.923**		
		0.500	-0.490	0.700	-0.494		
		0.520	-0.457	0.750	-0.472		
		0.530	-0.455	0.820	-0.382**		
		0.550	-0.457	0.890	-0.283		
		0.560	-0.458	0.900	-0.282		
		0.580	-0.446	0.960	-0.221		
		0.590	-0.474				
		0.600	-0.435				
		0.640	-0.372				
		0.700	-0.400				
		0.750	-0.049**				
		0.820	-0.281				
		0.870	-0.225				
		0.930	-0.223				
		0.960	-0.220				
			Lower Surface				
0.020	0.250	0.020	0.411	0.020	0.471	0.020	0.761
0.110	-0.040	0.060	0.282	0.060	0.342	0.060	1.133**
0.230	-0.064	0.090	0.201	0.090	0.761**	0.110	0.249
0.400	-0.086	0.120	0.102	0.120	0.156	0.250	-0.005
0.490	-0.094	0.200	0.064	0.200	0.096	0.400	-0.057
0.630	0.832**	0.260	-0.009	0.250	0.001	0.490	-0.126
0.750	-0.036	0.400	-0.074	0.400	-0.070	0.580	-0.214
0.850	0.004	0.490	-0.120	0.490	-0.043	0.650	-0.084
0.900	0.089	0.580	-0.139	0.580	-0.172	0.750	0.151
0.960	0.082	0.640	0.005	0.650	-0.043	0.830	0.289
		0.750	0.135	0.750	-0.014	0.900	0.314
		0.870	0.183	0.890	0.255	0.960	0.227
		0.930	0.108	0.930	0.179		
		0.960	0.040	0.960	-0.799**		
CN =	0.461		0.652		0.744		0.792

Table J-2. Continued.

Flight 208, Wing sweep = 26°, Time = 15-2-25-000, MINF = 0.851, Camber = 0/2, ALPT = 4.10, BETA = -0.10, QINF = 598.2, RNPU = 4.7E+06, CNWP = 0.1806

η = 0.93		0.76		0.59		0.40	
			Upper Surface				
x/c	CP	*x/c*	CP	*x/c*	CP	*x/c*	CP
0.020	-0.017	0.000	0.847	0.000	0.422**	0.010	-0.731
0.060	-0.153	0.020	-0.276	0.020	-0.404	0.020	-0.824
0.110	-0.223	0.040	-0.218	0.060	-0.251	0.060	-0.690
0.200	-0.211	0.060	-0.350	0.090	-0.640	0.110	-0.684
0.230	-0.301	0.090	-0.317	0.110	-0.545	0.140	-0.713
0.400	-0.215	0.130	-0.361	0.130	-0.295	0.190	-1.972**
0.490	-0.201	0.150	-0.346	0.150	-0.301	0.250	-0.292
0.590	-0.261	0.200	-0.348	0.210	-0.405	0.400	-0.351
0.630	-0.277	0.250	-0.329	0.250	-0.443	0.490	-0.324
0.700	-0.249	0.260	-0.326	0.340	-0.305	0.580	-0.317
0.750	-0.258	0.280	-0.341	0.370	-0.353	0.650	-0.407
0.810	-0.227	0.290	-0.337	0.400	-0.353	0.700	-0.371
0.840	-0.241	0.310	-0.330	0.410	-1.054**	0.750	-0.414
0.900	-0.113	0.320	-0.328	0.430	-0.343	0.800	-0.506
0.960	0.020	0.340	-0.310	0.440	-0.331	0.830	-0.492
		0.350	-0.269**	0.460	-0.326	0.900	-0.170
		0.370	-0.302	0.490	-0.306	0.960	0.013
		0.380	-0.314	0.500	-0.323		
		0.400	-0.271	0.520	-0.306		
		0.410	-0.305	0.540	-0.291		
		0.430	-0.276	0.550	-0.288		
		0.440	-0.271	0.580	-0.301		
		0.460	-0.285	0.600	-0.391		
		0.470	-0.300	0.610	-0.328		
		0.490	-0.290	0.650	-0.666		
		0.500	-0.288	0.700	-0.549		
		0.520	-0.284	0.750	-0.483		
		0.530	-0.290	0.820	-0.355		
		0.550	-0.325	0.890	-0.111		
		0.560	-0.313	0.900	-0.071		
		0.580	-0.282	0.960	0.037		
		0.590	-0.323				
		0.600	-0.320				
		0.640	-0.548				
		0.700	-0.463				
		0.750	-0.071				
		0.820	-0.287				
		0.870	-0.237				
		0.930	-0.081				
		0.960	-0.012				
			Lower Surface				
0.020	-0.779	0.020	-0.449	0.020	-0.175	0.020	0.231
0.110	-0.474	0.060	-0.189	0.060	-0.083	0.060	0.002
0.230	-0.195	0.090	-0.226	0.090	-0.122	0.110	-0.094
0.400	-0.116	0.120	-0.280	0.120	-0.220	0.250	-0.347
0.490	-0.109	0.200	-0.307	0.200	-0.345	0.400	-0.336
0.630	0.908**	0.260	-0.323	0.250	-0.358	0.490	-0.381
0.750	0.034	0.400	-0.226	0.400	-0.301	0.580	-0.400
0.850	0.091	0.490	-0.198	0.490	-0.112	0.650	-0.165
0.900	0.196	0.580	-0.186	0.580	-0.269	0.750	0.115
0.960	0.171	0.640	0.029	0.650	-0.075	0.830	0.251
		0.750	0.168	0.750	-0.062	0.900	0.307
		0.870	0.246	0.890	0.309	0.960	0.259
		0.930	0.220	0.930	0.255		
		0.960	0.178	0.960	0.319		
CN =	0.113		0.203		0.216		0.270

Table J-2. Continued.

Flight 208, Wing sweep = 26°, Time = 15-2-29-500, MINF = 0.853, Camber = 0/2, ALPT = 5.07, BETA = 0.31, QINF = 600.8, RNPU = 4.7E+06, CNWP = 0.2395

η = 0.93		0.76		0.59		0.40	
			Upper Surface				
x/c	CP	*x/c*	CP	*x/c*	CP	*x/c*	CP
0.020	-0.241	0.000	0.868	0.000	0.399**	0.010	-0.732
0.060	-0.431	0.020	-0.547	0.020	-0.415	0.020	-0.932
0.110	-0.412	0.040	-0.386	0.060	-0.318	0.060	-0.872
0.200	-0.239	0.060	-0.609	0.090	-0.775	0.110	-0.819
0.230	-0.367	0.090	-0.640	0.110	-0.758	0.140	-0.855
0.400	-0.237	0.130	-0.659	0.130	-0.728	0.190	-1.964**
0.490	-0.218	0.150	-0.628	0.150	-0.674	0.250	-0.825
0.590	-0.268	0.200	-0.533	0.210	-0.707	0.400	-0.322
0.630	-0.300	0.250	-0.657	0.250	-0.737	0.490	-0.292
0.700	-0.256	0.260	-0.654	0.340	-0.673	0.580	-0.306
0.750	-0.260	0.280	-0.657	0.370	-0.262	0.650	-0.397
0.810	-0.234	0.290	-0.451	0.400	-0.216	0.700	-0.370
0.840	-0.252	0.310	-0.212	0.410	-1.050**	0.750	-0.414
0.900	-0.120	0.320	-0.206	0.430	-0.241	0.800	-0.450
0.960	-0.006	0.340	-0.194	0.440	-0.244	0.830	-0.440
		0.350	-0.184**	0.460	-0.254	0.900	-0.161
		0.370	-0.226	0.490	-0.261	0.960	0.013
		0.380	-0.254	0.500	-0.273		
		0.400	-0.233	0.520	-0.277		
		0.410	-0.266	0.540	-0.270		
		0.430	-0.261	0.550	-0.269		
		0.440	-0.252	0.580	-0.285		
		0.460	-0.268	0.600	-0.384		
		0.470	-0.299	0.610	-0.324		
		0.490	-0.292	0.650	-0.661		
		0.500	-0.289	0.700	-0.547		
		0.520	-0.292	0.750	-0.484		
		0.530	-0.298	0.820	-0.342		
		0.550	-0.326	0.890	-0.108		
		0.560	-0.314	0.900	-0.072		
		0.580	-0.288	0.960	0.044		
		0.590	-0.330				
		0.600	-0.325				
		0.640	-0.545				
		0.700	-0.467				
		0.750	-0.066				
		0.820	-0.282				
		0.870	-0.235				
		0.930	-0.083				
		0.960	-0.012				
			Lower Surface				
0.020	-0.316	0.020	-0.140	0.020	-0.005	0.020	0.431
0.110	-0.297	0.060	-0.067	0.060	0.018	0.060	0.002
0.230	-0.097	0.090	-0.111	0.090	-0.037	0.110	-0.011
0.400	-0.097	0.120	-0.180	0.120	-0.127	0.250	-0.269
0.490	-0.098	0.200	-0.149	0.200	-0.243	0.400	-0.270
0.630	0.903**	0.260	-0.247	0.250	-0.264	0.490	-0.309
0.750	0.031	0.400	-0.197	0.400	-0.252	0.580	-0.360
0.850	0.083	0.490	-0.186	0.490	-0.105	0.650	-0.154
0.900	0.177	0.580	-0.173	0.580	-0.250	0.750	0.125
0.960	0.164	0.640	0.026	0.650	-0.072	0.830	0.258
		0.750	0.167	0.750	-0.059	0.900	0.314
		0.870	0.249	0.890	0.318	0.960	0.267
		0.930	0.222	0.930	0.257		
		0.960	0.183	0.960	0.320		
CN =	0.197		0.308		0.329		0.395

Table J-2. Continued.

Flight 208, Wing sweep = 26°, Time = 15-2-39-000, MINF = 0.857, Camber = 0/2, ALPT = 6.99, BETA = 0.25, QINF = 608.5, RNPU = 4.8E+06, CNWP = 0.3620

η = 0.93		0.76		0.59		0.40	
			Upper Surface				
x/c	CP	*x/c*	CP	*x/c*	CP	*x/c*	CP
0.020	-0.718	0.000	0.819	0.000	0.403**	0.010	-0.967
0.060	-0.735	0.020	-0.846	0.020	-0.883	0.020	-1.093
0.110	-0.743	0.040	-0.697	0.060	-0.381	0.060	-1.079
0.200	-0.670	0.060	-0.835	0.090	-0.958	0.110	-0.999
0.230	-0.548	0.090	-0.864	0.110	-0.942	0.140	-1.005
0.400	-0.636	0.130	-0.863	0.130	-0.942	0.190	-1.944**
0.490	-0.184	0.150	-0.877	0.150	-0.868	0.250	-1.047
0.590	-0.189	0.200	-0.797	0.210	-0.900	0.400	-0.809
0.630	-0.225	0.250	-0.846	0.250	-0.926	0.490	-0.722
0.700	-0.214	0.260	-0.851	0.340	-0.970	0.580	-0.600
0.750	-0.245	0.280	-0.873	0.370	-0.964	0.650	-0.654
0.810	-0.225	0.290	-0.893	0.400	-0.943	0.700	-0.626
0.840	-0.247	0.310	-0.860	0.410	-1.042**	0.750	-0.410
0.900	-0.166	0.320	-0.862	0.430	-0.965	0.800	-0.211
0.960	-0.049	0.340	-0.873	0.440	-0.952	0.830	-0.166
		0.350	-0.436**	0.460	-0.762	0.900	-0.058
		0.370	-0.872	0.490	-0.928	0.960	0.028
		0.380	-0.920	0.500	-0.970		
		0.400	-0.862	0.520	-0.945		
		0.410	-0.871	0.540	-0.945		
		0.430	-0.870	0.550	-0.927		
		0.440	-0.821	0.580	-0.938		
		0.460	-0.899	0.600	-0.936		
		0.470	-0.896	0.610	-0.885		
		0.490	-0.878	0.650	-0.377		
		0.500	-0.881	0.700	-0.218		
		0.520	-0.863	0.750	-0.183		
		0.530	-0.854	0.820	-0.163		
		0.550	-0.889	0.890	-0.047		
		0.560	-0.826	0.900	-0.029		
		0.580	-0.436	0.960	0.070		
		0.590	-0.337				
		0.600	-0.242				
		0.640	-0.141				
		0.700	-0.133				
		0.750	-0.054				
		0.820	-0.206				
		0.870	-0.194				
		0.930	-0.056				
		0.960	0.013				
			Lower Surface				
0.020	-0.037	0.020	0.138	0.020	0.216	0.020	0.602
0.110	-0.183	0.060	0.100	0.060	0.190	0.060	-0.003
0.230	-0.120	0.090	0.043	0.090	0.104	0.110	0.155
0.400	-0.094	0.120	-0.045	0.120	-0.015	0.250	-0.153
0.490	-0.092	0.200	-0.055	0.200	-0.078	0.400	-0.179
0.630	0.905**	0.260	-0.140	0.250	-0.140	0.490	-0.226
0.750	0.013	0.400	-0.143	0.400	-0.165	0.580	-0.314
0.850	0.054	0.490	-0.143	0.490	-0.073	0.650	-0.135
0.900	0.144	0.580	-0.152	0.580	-0.220	0.750	0.151
0.960	0.135	0.640	0.042	0.650	-0.055	0.830	0.281
		0.750	0.182	0.750	-0.056	0.900	0.328
		0.870	0.247	0.890	0.327	0.960	0.266
		0.930	0.230	0.930	0.272		
		0.960	0.187	0.960	0.307		
CN =	0.329		0.548		0.565		0.637

Table J-2. Continued.

Flight 208, Wing sweep = 26°, Time = 15-2-48-500, MINF = 0.854, Camber = 0/2, ALPT = 8.06, BETA = 0.25, QINF = 610.5, RNPU = 4.8E+06, CNWP = 0.4296

η = 0.93		0.76		0.59		0.40	
			Upper Surface				
x/c	CP	*x/c*	CP	*x/c*	CP	*x/c*	CP
0.020	-0.835	0.000	0.754	0.000	0.330**	0.010	-1.086
0.060	-0.863	0.020	-0.930	0.020	-0.969	0.020	-1.197
0.110	-0.868	0.040	-0.840	0.060	-0.481	0.060	-1.143
0.200	-0.768	0.060	-0.959	0.090	-1.056	0.110	-1.125
0.230	-0.692	0.090	-0.963	0.110	-1.050	0.140	-1.141
0.400	-0.723	0.130	-0.888	0.130	-1.048	0.190	-1.961**
0.490	-0.581	0.150	-0.966	0.150	-0.966	0.250	-1.169
0.590	-0.175	0.200	-0.905	0.210	-1.005	0.400	-0.873
0.630	-0.214	0.250	-0.956	0.250	-0.980	0.490	-0.757
0.700	-0.214	0.260	-0.948	0.340	-1.071	0.580	-0.668
0.750	-0.254	0.280	-0.976	0.370	-1.070	0.650	-0.697
0.810	-0.231	0.290	-0.992	0.400	-1.045	0.700	-0.664
0.840	-0.257	0.310	-0.879	0.410	-1.062**	0.750	-0.408
0.900	-0.190	0.320	-0.959	0.430	-1.069	0.800	-0.213
0.960	-0.069	0.340	-0.915	0.440	-1.051	0.830	-0.138
		0.350	-0.453**	0.460	-0.783	0.900	-0.047
		0.370	-0.952	0.490	-1.015	0.960	-0.008
		0.380	-1.012	0.500	-1.050		
		0.400	-0.942	0.520	-1.055		
		0.410	-0.892	0.540	-1.057		
		0.430	-0.964	0.550	-1.032		
		0.440	-0.842	0.580	-1.029		
		0.460	-1.001	0.600	-1.046		
		0.470	-0.992	0.610	-1.009		
		0.490	-0.973	0.650	-0.509		
		0.500	-0.978	0.700	-0.349		
		0.520	-0.968	0.750	-0.302		
		0.530	-0.929	0.820	-0.119		
		0.550	-0.987	0.890	-0.019		
		0.560	-0.991	0.900	0.009		
		0.580	-0.938	0.960	0.082		
		0.590	-0.630				
		0.600	-0.450				
		0.640	-0.238				
		0.700	-0.178				
		0.750	-0.034				
		0.820	-0.155				
		0.870	-0.140				
		0.930	-0.033				
		0.960	0.026				
			Lower Surface				
0.020	0.083	0.020	0.266	0.020	0.313	0.020	0.670
0.110	-0.129	0.060	0.179	0.060	0.256	0.060	-0.027
0.230	-0.094	0.090	0.109	0.090	0.179	0.110	0.233
0.400	-0.083	0.120	0.022	0.120	0.054	0.250	-0.090
0.490	-0.084	0.200	-0.003	0.200	0.026	0.400	-0.136
0.630	0.878**	0.260	-0.093	0.250	-0.072	0.490	-0.182
0.750	0.008	0.400	-0.106	0.400	-0.126	0.580	-0.264
0.850	0.038	0.490	-0.124	0.490	-0.055	0.650	-0.114
0.900	0.137	0.580	-0.130	0.580	-0.187	0.750	0.147
0.960	0.124	0.640	0.047	0.650	-0.032	0.830	0.293
		0.750	0.176	0.750	-0.030	0.900	0.333
		0.870	0.239	0.890	0.327	0.960	0.254
		0.930	0.229	0.930	0.269		
		0.960	0.187	0.960	0.305		
CN =	0.428		0.637		0.670		0.724

Table J-2. Continued.

Flight 208, Wing sweep = 26°, Time = 15-2-57-000, MINF = 0.849, Camber = 0/2, ALPT = 9.11, BETA = 0.17, QINF = 619.4, RNPU = 4.9E+06, CNWP = 0.4840

η = 0.93		0.76		0.59		0.40	
			Upper Surface				
x/c	CP	*x/c*	CP	*x/c*	CP	*x/c*	CP
0.020	-0.977	0.000	0.682	0.000	0.256**	0.010	-1.220
0.060	-0.989	0.020	-1.075	0.020	-1.101	0.020	-1.292
0.110	-0.974	0.040	-0.932	0.060	-0.586	0.060	-1.300
0.200	-0.883	0.060	-1.058	0.090	-1.173	0.110	-1.239
0.230	-0.800	0.090	-1.063	0.110	-1.141	0.140	-1.247
0.400	-0.831	0.130	-0.924	0.130	-1.155	0.190	-1.982**
0.490	-0.648	0.150	-1.041	0.150	-1.076	0.250	-1.243
0.590	-0.152	0.200	-1.002	0.210	-1.100	0.400	-0.933
0.630	-0.215	0.250	-1.062	0.250	-1.015	0.490	-0.823
0.700	-0.219	0.260	-1.044	0.340	-1.160	0.580	-0.731
0.750	-0.273	0.280	-1.077	0.370	-1.161	0.650	-0.656
0.810	-0.254	0.290	-1.086	0.400	-1.125	0.700	-0.597
0.840	-0.281	0.310	-0.915	0.410	-1.095**	0.750	-0.359
0.900	-0.219	0.320	-1.062	0.430	-1.187	0.800	-0.214
0.960	-0.094	0.340	-0.951	0.440	-1.161	0.830	-0.160
		0.350	-0.460**	0.460	-0.820	0.900	-0.096
		0.370	-0.987	0.490	-1.112	0.960	-0.035
		0.380	-1.114	0.500	-1.137		
		0.400	-1.042	0.520	-1.147		
		0.410	-0.928	0.540	-1.013		
		0.430	-1.017	0.550	-0.687		
		0.440	-0.766	0.580	-0.563		
		0.460	-0.929	0.600	-0.566		
		0.470	-0.853	0.610	-0.529		
		0.490	-0.616	0.650	-0.586		
		0.500	-0.557	0.700	-0.447		
		0.520	-0.537	0.750	-0.434		
		0.530	-0.488	0.820	-0.311		
		0.550	-0.488	0.890	-0.135		
		0.560	-0.476	0.900	-0.145		
		0.580	-0.463	0.960	-0.065		
		0.590	-0.476				
		0.600	-0.442				
		0.640	-0.381				
		0.700	-0.365				
		0.750	-0.020				
		0.820	-0.196				
		0.870	-0.169				
		0.930	-0.113				
		0.960	-0.097				
			Lower Surface				
0.020	0.210	0.020	0.393	0.020	0.419	0.020	0.742
0.110	-0.076	0.060	0.261	0.060	0.319	0.060	-0.075
0.230	-0.064	0.090	0.180	0.090	0.238	0.110	0.305
0.400	-0.073	0.120	0.083	0.120	0.115	0.250	-0.031
0.490	-0.089	0.200	0.053	0.200	0.087	0.400	-0.086
0.630	0.817**	0.260	-0.040	0.250	-0.030	0.490	-0.138
0.750	-0.002	0.400	-0.078	0.400	-0.084	0.580	-0.225
0.850	0.032	0.490	-0.107	0.490	-0.042	0.650	-0.096
0.900	0.127	0.580	-0.040	0.580	-0.172	0.750	0.160
0.960	0.112	0.640	0.035	0.650	-0.024	0.830	0.282
		0.750	0.156	0.750	-0.017	0.900	0.330
		0.870	0.205	0.890	0.309	0.960	0.244
		0.930	0.171	0.930	0.234		
		0.960	0.113	0.960	0.237		
CN =	0.496		0.668		0.746		0.797

Table J-2. Continued.

Flight 208, Wing sweep = 26°, Time = 14-57-18-000, MINF = 0.854, Camber = 10/2, ALPT = 4.00, BETA = 0.40, QINF = 600.1, RNPU = 4.7E+06, CNWP = 0.1731

η = 0.93		0.76		0.59		0.40	
			Upper Surface				
x/c	CP	*x/c*	CP	*x/c*	CP	*x/c*	CP
0.020	0.590	0.000	0.074	0.000	0.154**	0.010	0.441
0.060	0.131	0.020	0.592	0.020	0.615	0.020	0.285
0.110	-0.234	0.040	0.409	0.060	0.298	0.060	-0.215
0.200	-0.914	0.060	0.040	0.090	-0.211	0.110	-0.568
0.230	-0.816	0.090	-0.177	0.110	-0.426	0.140	-0.998
0.400	-0.159	0.130	-0.444	0.130	-0.709	0.190	-1.959**
0.490	-0.176	0.150	-0.722	0.150	-0.865	0.250	-0.736
0.590	-0.238	0.200	-0.819	0.210	-0.866	0.400	-0.312
0.630	-0.248	0.250	-0.819	0.250	-0.834	0.490	-0.303
0.700	-0.235	0.260	-0.802	0.340	-0.410	0.580	-0.299
0.750	-0.252	0.280	-0.792	0.370	-0.282	0.650	-0.403
0.810	-0.227	0.290	-0.776	0.400	-0.246	0.700	-0.362
0.840	-0.241	0.310	-0.736	0.410	-1.044**	0.750	-0.403
0.900	-0.121	0.320	-0.743	0.430	-0.253	0.800	-0.529
0.960	-0.013	0.340	-0.486	0.440	-0.251	0.830	-0.517
		0.350	-0.263**	0.460	-0.265	0.900	-0.181
		0.370	-0.223	0.490	-0.246	0.960	-0.002
		0.380	-0.212	0.500	-0.270		
		0.400	-0.189	0.520	-0.261		
		0.410	-0.204	0.540	-0.260		
		0.430	-0.203	0.550	-0.256		
		0.440	-0.189	0.580	-0.267		
		0.460	-0.215	0.600	-0.314		
		0.470	-0.237	0.610	-0.307		
		0.490	-0.232	0.650	-0.645		
		0.500	-0.243	0.700	-0.528		
		0.520	-0.238	0.750	-0.462		
		0.530	-0.249	0.820	-0.330		
		0.550	-0.281	0.890	-0.118		
		0.560	-0.274	0.900	-0.081		
		0.580	-0.255	0.960	0.033		
		0.590	-0.299				
		0.600	-0.294				
		0.640	-0.535				
		0.700	-0.344				
		0.750	-0.080				
		0.820	-0.289				
		0.870	-0.239				
		0.930	-0.087				
		0.960	-0.020				
			Lower Surface				
0.020	-1.086	0.020	-0.873	0.020	-1.565	0.020	-0.892
0.110	-0.498	0.060	-0.764	0.060	-0.928	0.060	0.054
0.230	-0.248	0.090	-0.655	0.090	-0.451	0.110	-0.393
0.400	-0.124	0.120	-0.552	0.120	-0.282	0.250	-0.285
0.490	-0.061	0.200	-0.222	0.200	-0.193	0.400	-0.332
0.630	1.010**	0.260	-0.341	0.250	-0.217	0.490	-0.384
0.750	0.023	0.400	-0.170	0.400	-0.274	0.580	-0.417
0.850	0.058	0.490	-0.140	0.490	-0.116	0.650	-0.188
0.900	0.096	0.580	-0.108	0.580	-0.236	0.750	0.095
0.960	0.108	0.640	0.028	0.650	-0.076	0.830	0.236
		0.750	0.100	0.750	-0.054	0.900	0.298
		0.870	0.178	0.890	0.264	0.960	0.259
		0.930	0.194	0.930	0.224		
		0.960	0.161	0.960	0.316		
CN =	0.154		0.172		0.203		0.258

Table J-2. Continued.

Flight 208, Wing sweep = 26°, Time = 14-57-43-000, MINF = 0.851, Camber = 10/2, ALPT = 4.02, BETA = 0.45, QINF = 596.3, RNPU = 4.7E+06, CNWP = 0.1775

η = 0.93		0.76		0.59		0.40	
			Upper Surface				
x/c	CP	*x/c*	CP	*x/c*	CP	*x/c*	CP
0.020	0.585	0.000	0.074	0.000	0.162**	0.010	0.436
0.060	0.116	0.020	0.590	0.020	0.607	0.020	0.283
0.110	-0.238	0.040	0.407	0.060	0.279	0.060	-0.223
0.200	-0.924	0.060	0.043	0.090	-0.223	0.110	-0.572
0.230	-0.822	0.090	-0.183	0.110	-0.437	0.140	-1.001
0.400	-0.179	0.130	-0.454	0.130	-0.720	0.190	-1.972**
0.490	-0.188	0.150	-0.734	0.150	-0.872	0.250	-0.741
0.590	-0.238	0.200	-0.827	0.210	-0.877	0.400	-0.318
0.630	-0.247	0.250	-0.834	0.250	-0.844	0.490	-0.297
0.700	-0.234	0.260	-0.811	0.340	-0.342	0.580	-0.301
0.750	-0.249	0.280	-0.802	0.370	-0.265	0.650	-0.397
0.810	-0.221	0.290	-0.788	0.400	-0.245	0.700	-0.361
0.840	-0.236	0.310	-0.741	0.410	-1.051**	0.750	-0.406
0.900	-0.122	0.320	-0.742	0.430	-0.266	0.800	-0.519
0.960	-0.010	0.340	-0.329	0.440	-0.263	0.830	-0.496
		0.350	-0.235**	0.460	-0.272	0.900	-0.187
		0.370	-0.214	0.490	-0.260	0.960	-0.005
		0.380	-0.217	0.500	-0.282		
		0.400	-0.198	0.520	-0.268		
		0.410	-0.217	0.540	-0.269		
		0.430	-0.216	0.550	-0.267		
		0.440	-0.205	0.580	-0.257		
		0.460	-0.222	0.600	-0.322		
		0.470	-0.252	0.610	-0.316		
		0.490	-0.247	0.650	-0.658		
		0.500	-0.249	0.700	-0.535		
		0.520	-0.255	0.750	-0.464		
		0.530	-0.262	0.820	-0.331		
		0.550	-0.293	0.890	-0.127		
		0.560	-0.276	0.900	-0.084		
		0.580	-0.260	0.960	0.028		
		0.590	-0.307				
		0.600	-0.305				
		0.640	-0.537				
		0.700	-0.312				
		0.750	-0.078				
		0.820	-0.286				
		0.870	-0.237				
		0.930	-0.086				
		0.960	-0.020				
			Lower Surface				
0.020	-1.103	0.020	-0.845	0.020	-1.575	0.020	-0.898
0.110	-0.489	0.060	-0.737	0.060	-0.827	0.060	0.054
0.230	-0.252	0.090	-0.639	0.090	-0.451	0.110	-0.401
0.400	-0.112	0.120	-0.534	0.120	-0.349	0.250	-0.288
0.490	-0.070	0.200	-0.229	0.200	-0.197	0.400	-0.327
0.630	1.016**	0.260	-0.340	0.250	-0.204	0.490	-0.380
0.750	0.021	0.400	-0.165	0.400	-0.271	0.580	-0.397
0.850	0.054	0.490	-0.128	0.490	-0.117	0.650	-0.182
0.900	0.104	0.580	-0.102	0.580	-0.223	0.750	0.094
0.960	0.112	0.640	0.026	0.650	-0.080	0.830	0.240
		0.750	0.102	0.750	-0.053	0.900	0.296
		0.870	0.185	0.890	0.261	0.960	0.255
		0.930	0.190	0.930	0.217		
		0.960	0.156	0.960	0.313		
CN =	0.163		0.175		0.210		0.261

Table J-2. Continued.

Flight 208, Wing sweep = 26°, Time = 14-57-56-000, MINF = 0.851, Camber = 10/2, ALPT = 4.05, BETA = 0.45, QINF = 596.3, RNPU = 4.7E+06, CNWP = 0.1789

η = 0.93		0.76		0.59		0.40	
			Upper Surface				
x/c	CP	*x/c*	CP	*x/c*	CP	*x/c*	CP
0.020	0.585	0.000	0.087	0.000	0.190**	0.010	0.422
0.060	0.116	0.020	0.590	0.020	0.610	0.020	0.278
0.110	-0.238	0.040	0.400	0.060	0.280	0.060	-0.223
0.200	-0.920	0.060	0.025	0.090	-0.230	0.110	-0.585
0.230	-0.835	0.090	-0.191	0.110	-0.441	0.140	-1.001
0.400	-0.168	0.130	-0.457	0.130	-0.727	0.190	-1.972**
0.490	-0.188	0.150	-0.743	0.150	-0.875	0.250	-0.748
0.590	-0.242	0.200	-0.831	0.210	-0.885	0.400	-0.318
0.630	-0.249	0.250	-0.834	0.250	-0.854	0.490	-0.300
0.700	-0.240	0.260	-0.821	0.340	-0.425	0.580	-0.298
0.750	-0.248	0.280	-0.809	0.370	-0.288	0.650	-0.397
0.810	-0.218	0.290	-0.795	0.400	-0.244	0.700	-0.369
0.840	-0.232	0.310	-0.751	0.410	-1.051**	0.750	-0.410
0.900	-0.123	0.320	-0.757	0.430	-0.255	0.800	-0.515
0.960	-0.010	0.340	-0.480	0.440	-0.256	0.830	-0.491
		0.350	-0.254**	0.460	-0.267	0.900	-0.186
		0.370	-0.223	0.490	-0.256	0.960	-0.008
		0.380	-0.213	0.500	-0.276		
		0.400	-0.191	0.520	-0.259		
		0.410	-0.205	0.540	-0.266		
		0.430	-0.205	0.550	-0.258		
		0.440	-0.199	0.580	-0.269		
		0.460	-0.211	0.600	-0.320		
		0.470	-0.246	0.610	-0.313		
		0.490	-0.239	0.650	-0.670		
		0.500	-0.242	0.700	-0.535		
		0.520	-0.247	0.750	-0.462		
		0.530	-0.255	0.820	-0.329		
		0.550	-0.280	0.890	-0.125		
		0.560	-0.283	0.900	-0.081		
		0.580	-0.264	0.960	0.029		
		0.590	-0.301				
		0.600	-0.300				
		0.640	-0.536				
		0.700	-0.306				
		0.750	-0.078				
		0.820	-0.290				
		0.870	-0.239				
		0.930	-0.088				
		0.960	-0.015				
			Lower Surface				
0.020	-0.888	0.020	-0.708	0.020	-1.563	0.020	-0.898
0.110	-0.706	0.060	-0.633	0.060	-0.830	0.060	0.054
0.230	-0.233	0.090	-0.593	0.090	-0.565	0.110	-0.396
0.400	-0.051	0.120	-0.516	0.120	-0.404	0.250	-0.288
0.490	-0.029	0.200	-0.223	0.200	-0.201	0.400	-0.331
0.630	1.016**	0.260	-0.380	0.250	-0.204	0.490	-0.359
0.750	0.033	0.400	-0.197	0.400	-0.268	0.580	-0.399
0.850	0.053	0.490	-0.143	0.490	-0.117	0.650	-0.186
0.900	0.116	0.580	-0.094	0.580	-0.234	0.750	0.095
0.960	0.119	0.640	0.005	0.650	-0.080	0.830	0.240
		0.750	0.096	0.750	-0.056	0.900	0.289
		0.870	0.139	0.890	0.269	0.960	0.251
		0.930	0.164	0.930	0.221		
		0.960	0.143	0.960	0.316		
CN =	0.152		0.172		0.210		0.264

Table J-2. Continued.

Flight 208, Wing sweep = 26°, Time = 14-58-10-000, MINF = 0.854, Camber = 10/2, ALPT = 5.18, BETA = 0.34, QINF = 599.8, RNPU = 4.7E+06, CNWP = 0.2939

η = 0.93		0.76		0.59		0.40	
			Upper Surface				
x/c	CP	*x/c*	CP	*x/c*	CP	*x/c*	CP
0.020	0.543	0.000	0.201	0.000	0.281**	0.010	0.310
0.060	0.068	0.020	0.531	0.020	0.548	0.020	0.172
0.110	-0.281	0.040	0.343	0.060	0.271	0.060	-0.378
0.200	-0.951	0.060	-0.021	0.090	-0.283	0.110	-0.616
0.230	-0.899	0.090	-0.241	0.110	-0.497	0.140	-1.057
0.400	-0.121	0.130	-0.502	0.130	-0.778	0.190	-1.959**
0.490	-0.120	0.150	-0.783	0.150	-0.916	0.250	-0.811
0.590	-0.193	0.200	-0.875	0.210	-0.940	0.400	-0.651
0.630	-0.222	0.250	-0.904	0.250	-0.929	0.490	-0.412
0.700	-0.221	0.260	-0.892	0.340	-0.910	0.580	-0.378
0.750	-0.248	0.280	-0.900	0.370	-0.909	0.650	-0.424
0.810	-0.221	0.290	-0.878	0.400	-0.880	0.700	-0.399
0.840	-0.233	0.310	-0.835	0.410	-1.044**	0.750	-0.457
0.900	-0.128	0.320	-0.849	0.430	-0.883	0.800	-0.347
0.960	-0.014	0.340	-0.848	0.440	-0.866	0.830	-0.283
		0.350	-0.460**	0.460	-0.763	0.900	-0.167
		0.370	-0.842	0.490	-0.355	0.960	0.012
		0.380	-0.881	0.500	-0.307		
		0.400	-0.821	0.520	-0.261		
		0.410	-0.840	0.540	-0.246		
		0.430	-0.797	0.550	-0.231		
		0.440	-0.779	0.580	-0.237		
		0.460	-0.823	0.600	-0.289		
		0.470	-0.664	0.610	-0.259		
		0.490	-0.350	0.650	-0.534		
		0.500	-0.233	0.700	-0.377		
		0.520	-0.195	0.750	-0.296		
		0.530	-0.143	0.820	-0.318		
		0.550	-0.146	0.890	-0.114		
		0.560	-0.140	0.900	-0.074		
		0.580	-0.130	0.960	0.039		
		0.590	-0.166				
		0.600	-0.163				
		0.640	-0.270				
		0.700	-0.261				
		0.750	-0.062				
		0.820	-0.274				
		0.870	-0.233				
		0.930	-0.079				
		0.960	-0.012				
			Lower Surface				
0.020	-0.863	0.020	-0.652	0.020	-0.771	0.020	-0.788
0.110	-0.575	0.060	-0.542	0.060	-0.579	0.060	-0.047
0.230	-0.115	0.090	-0.485	0.090	-0.415	0.110	-0.232
0.400	-0.035	0.120	-0.386	0.120	-0.290	0.250	-0.209
0.490	-0.029	0.200	-0.108	0.200	-0.104	0.400	-0.259
0.630	1.011**	0.260	-0.207	0.250	-0.136	0.490	-0.309
0.750	0.039	0.400	-0.124	0.400	-0.210	0.580	-0.358
0.850	0.063	0.490	-0.114	0.490	-0.093	0.650	-0.161
0.900	0.133	0.580	-0.098	0.580	-0.214	0.750	0.119
0.960	0.119	0.640	0.042	0.650	-0.064	0.830	0.261
		0.750	0.125	0.750	-0.051	0.900	0.314
		0.870	0.189	0.890	0.297	0.960	0.266
		0.930	0.188	0.930	0.243		
		0.960	0.158	0.960	0.332		
CN =	0.186		0.309		0.351		0.377

Table J-2. Continued.

Flight 208, Wing sweep = 26°, Time = 14-58-14-500, MINF = 0.853, Camber = 10/2, ALPT = 6.02, BETA = 0.19, QINF = 598.6, RNPU = 4.7E+06, CNWP = 0.3008

η = 0.93		0.76		0.59		0.40	
			Upper Surface				
x/c	CP	*x/c*	CP	*x/c*	CP	*x/c*	CP
0.020	0.509	0.000	0.277	0.000	0.322**	0.010	0.225
0.060	0.027	0.020	0.471	0.020	0.483	0.020	0.087
0.110	-0.308	0.040	0.295	0.060	0.253	0.060	-0.459
0.200	-0.987	0.060	-0.067	0.090	-0.333	0.110	-0.760
0.230	-0.942	0.090	-0.284	0.110	-0.546	0.140	-1.107
0.400	-0.688	0.130	-0.547	0.130	-0.820	0.190	-1.965**
0.490	-0.111	0.150	-0.816	0.150	-0.959	0.250	-1.090
0.590	-0.160	0.200	-0.918	0.210	-0.984	0.400	-0.785
0.630	-0.192	0.250	-0.955	0.250	-0.972	0.490	-0.503
0.700	-0.197	0.260	-0.942	0.340	-0.975	0.580	-0.463
0.750	-0.228	0.280	-0.962	0.370	-0.980	0.650	-0.526
0.810	-0.211	0.290	-0.945	0.400	-0.947	0.700	-0.500
0.840	-0.225	0.310	-0.865	0.410	-1.048**	0.750	-0.547
0.900	-0.133	0.320	-0.909	0.430	-0.978	0.800	-0.259
0.960	-0.025	0.340	-0.911	0.440	-0.955	0.830	-0.243
		0.350	-0.468**	0.460	-0.767	0.900	-0.129
		0.370	-0.901	0.490	-0.921	0.960	0.031
		0.380	-0.944	0.500	-0.961		
		0.400	-0.878	0.520	-0.945		
		0.410	-0.871	0.540	-0.933		
		0.430	-0.884	0.550	-0.588		
		0.440	-0.824	0.580	-0.399		
		0.460	-0.900	0.600	-0.351		
		0.470	-0.900	0.610	-0.292		
		0.490	-0.881	0.650	-0.360		
		0.500	-0.880	0.700	-0.258		
		0.520	-0.862	0.750	-0.232		
		0.530	-0.857	0.820	-0.246		
		0.550	-0.622	0.890	-0.093		
		0.560	-0.361	0.900	-0.057		
		0.580	-0.253	0.960	0.052		
		0.590	-0.222				
		0.600	-0.169				
		0.640	-0.147				
		0.700	-0.161				
		0.750	-0.048				
		0.820	-0.226				
		0.870	-0.201				
		0.930	-0.052				
		0.960	0.004				
			Lower Surface				
0.020	-0.787	0.020	-0.622	0.020	-0.682	0.020	-0.511
0.110	-0.435	0.060	-0.480	0.060	-0.395	0.060	-0.049
0.230	-0.075	0.090	-0.376	0.090	-0.178	0.110	-0.116
0.400	-0.032	0.120	-0.248	0.120	-0.106	0.250	-0.153
0.490	-0.041	0.200	-0.076	0.200	-0.086	0.400	-0.208
0.630	1.011**	0.260	-0.090	0.250	-0.102	0.490	-0.256
0.750	0.032	0.400	-0.096	0.400	-0.176	0.580	-0.324
0.850	0.060	0.490	-0.104	0.490	-0.081	0.650	-0.145
0.900	0.130	0.580	-0.113	0.580	-0.205	0.750	0.129
0.960	0.126	0.640	0.053	0.650	-0.056	0.830	0.268
		0.750	0.163	0.750	-0.041	0.900	0.326
		0.870	0.218	0.890	0.303	0.960	0.266
		0.930	0.201	0.930	0.256		
		0.960	0.166	0.960	0.328		
CN =	0.295		0.408		0.444		0.506

Table J-2. Continued.

Flight 208, Wing sweep = 26°, Time = 14-58-21-500, MINF = 0.856, Camber = 10/2, ALPT = 7.15, BETA = 0.22, QINF = 603.1, RNPU = 4.7E+06, CNWP = 0.4154

η = 0.93		0.76		0.59		0.40	
			Upper Surface				
x/c	CP	*x/c*	CP	*x/c*	CP	*x/c*	CP
0.020	0.464	0.000	0.381	0.000	0.382**	0.010	0.127
0.060	-0.022	0.020	0.426	0.020	0.410	0.020	-0.004
0.110	-0.342	0.040	0.237	0.060	0.138	0.060	-0.562
0.200	-1.040	0.060	-0.132	0.090	-0.395	0.110	-0.874
0.230	-0.981	0.090	-0.327	0.110	-0.592	0.140	-1.177
0.400	-0.792	0.130	-0.588	0.130	-0.865	0.190	-1.951**
0.490	-0.622	0.150	-0.844	0.150	-0.987	0.250	-1.130
0.590	-0.154	0.200	-0.946	0.210	-1.025	0.400	-0.810
0.630	-0.173	0.250	-1.001	0.250	-0.965	0.490	-0.664
0.700	-0.167	0.260	-0.981	0.340	-1.036	0.580	-0.557
0.750	-0.214	0.280	-1.009	0.370	-1.033	0.650	-0.599
0.810	-0.192	0.290	-0.996	0.400	-1.003	0.700	-0.575
0.840	-0.217	0.310	-0.859	0.410	-1.041**	0.750	-0.611
0.900	-0.151	0.320	-0.972	0.430	-1.046	0.800	-0.275
0.960	-0.039	0.340	-0.917	0.440	-1.029	0.830	-0.197
		0.350	-0.475**	0.460	-0.762	0.900	-0.047
		0.370	-0.955	0.490	-0.994	0.960	0.024
		0.380	-1.003	0.500	-1.028		
		0.400	-0.947	0.520	-1.027		
		0.410	-0.865	0.540	-1.024		
		0.430	-0.948	0.550	-0.998		
		0.440	-0.818	0.580	-0.990		
		0.460	-0.985	0.600	-0.994		
		0.470	-0.964	0.610	-0.969		
		0.490	-0.951	0.650	-0.530		
		0.500	-0.954	0.700	-0.368		
		0.520	-0.938	0.750	-0.286		
		0.530	-0.924	0.820	-0.154		
		0.550	-0.946	0.890	-0.034		
		0.560	-0.959	0.900	-0.007		
		0.580	-0.934	0.960	0.077		
		0.590	-0.985				
		0.600	-0.957				
		0.640	-0.283				
		0.700	-0.211				
		0.750	-0.039				
		0.820	-0.122				
		0.870	-0.122				
		0.930	-0.021				
		0.960	0.029				
			Lower Surface				
0.020	-0.938	0.020	-0.532	0.020	-0.600	0.020	-0.250
0.110	-0.250	0.060	-0.322	0.060	-0.096	0.060	-0.038
0.230	-0.050	0.090	-0.193	0.090	-0.005	0.110	-0.021
0.400	-0.044	0.120	-0.073	0.120	-0.036	0.250	-0.092
0.490	-0.060	0.200	-0.053	0.200	-0.058	0.400	-0.164
0.630	1.003**	0.260	-0.017	0.250	-0.059	0.490	-0.218
0.750	0.022	0.400	-0.081	0.400	-0.138	0.580	-0.300
0.850	0.051	0.490	-0.098	0.490	-0.067	0.650	-0.134
0.900	0.132	0.580	-0.113	0.580	-0.190	0.750	0.139
0.960	0.126	0.640	0.057	0.650	-0.045	0.830	0.288
		0.750	0.171	0.750	-0.041	0.900	0.333
		0.870	0.232	0.890	0.322	0.960	0.270
		0.930	0.220	0.930	0.266		
		0.960	0.186	0.960	0.338		
CN =	0.385		0.515		0.567		0.591

Table J-2. Continued.

Flight 208, Wing sweep = 26°, Time = 14-58-29-500, MINF = 0.849, Camber = 10/2, ALPT = 8.06, BETA = 0.11, QINF = 597.3, RNPU = 4.7E+06, CNWP = 0.4509

η = 0.93		0.76		0.59		0.40	
			Upper Surface				
x/c	CP	*x/c*	CP	*x/c*	CP	*x/c*	CP
0.020	0.403	0.000	0.481	0.000	0.407**	0.010	0.012
0.060	-0.087	0.020	0.340	0.020	0.289	0.020	-0.098
0.110	-0.384	0.040	0.164	0.060	0.063	0.060	-0.661
0.200	-1.068	0.060	-0.197	0.090	-0.452	0.110	-0.977
0.230	-1.025	0.090	-0.406	0.110	-0.653	0.140	-1.259
0.400	-0.859	0.130	-0.655	0.130	-0.936	0.190	-1.984**
0.490	-0.733	0.150	-0.916	0.150	-1.045	0.250	-1.270
0.590	-0.160	0.200	-1.004	0.210	-1.088	0.400	-0.879
0.630	-0.179	0.250	-1.067	0.250	-0.988	0.490	-0.723
0.700	-0.173	0.260	-1.053	0.340	-1.122	0.580	-0.635
0.750	-0.211	0.280	-1.075	0.370	-1.111	0.650	-0.679
0.810	-0.208	0.290	-1.083	0.400	-1.077	0.700	-0.660
0.840	-0.230	0.310	-0.881	0.410	-1.065**	0.750	-0.542
0.900	-0.176	0.320	-1.045	0.430	-1.128	0.800	-0.229
0.960	-0.056	0.340	-0.940	0.440	-1.112	0.830	-0.167
		0.350	-0.484**	0.460	-0.783	0.900	-0.060
		0.370	-0.988	0.490	-1.077	0.960	-0.002
		0.380	-1.084	0.500	-1.110		
		0.400	-1.022	0.520	-1.099		
		0.410	-0.888	0.540	-1.108		
		0.430	-1.022	0.550	-1.083		
		0.440	-0.840	0.580	-1.082		
		0.460	-1.057	0.600	-1.098		
		0.470	-1.047	0.610	-1.059		
		0.490	-1.033	0.650	-0.577		
		0.500	-1.039	0.700	-0.433		
		0.520	-1.019	0.750	-0.386		
		0.530	-0.953	0.820	-0.144		
		0.550	-1.035	0.890	-0.025		
		0.560	-1.029	0.900	0.001		
		0.580	-1.012	0.960	0.080		
		0.590	-1.056				
		0.600	-1.027				
		0.640	-0.344				
		0.700	-0.293				
		0.750	-0.039				
		0.820	-0.106				
		0.870	-0.089				
		0.930	-0.009				
		0.960	0.029				
			Lower Surface				
0.020	-0.798	0.020	-0.411	0.020	-0.342	0.020	-0.052
0.110	-0.062	0.060	-0.085	0.060	0.102	0.060	-0.035
0.230	-0.016	0.090	-0.014	0.090	0.074	0.110	0.067
0.400	-0.053	0.120	0.065	0.120	0.032	0.250	-0.039
0.490	-0.072	0.200	-0.029	0.200	-0.021	0.400	-0.111
0.630	0.999**	0.260	0.018	0.250	-0.012	0.490	-0.176
0.750	0.011	0.400	-0.057	0.400	-0.091	0.580	-0.253
0.850	0.045	0.490	-0.085	0.490	-0.057	0.650	-0.113
0.900	0.129	0.580	-0.109	0.580	-0.174	0.750	0.150
0.960	0.121	0.640	0.060	0.650	-0.031	0.830	0.281
		0.750	0.181	0.750	-0.031	0.900	0.332
		0.870	0.226	0.890	0.314	0.960	0.261
		0.930	0.218	0.930	0.266		
		0.960	0.179	0.960	0.342		
CN =	0.445		0.595		0.652		0.684

Table J-2. Continued.

Flight 208, Wing sweep = 26°, Time = 14-58-32-000, MINF = 0.847, Camber = 10/2, ALPT = 7.97, BETA = 0.34, QINF = 596.2, RNPU = 4.7E+06, CNWP = 0.4603

η = 0.93		0.76		0.59		0.40	
			Upper Surface				
x/c	CP	*x/c*	CP	*x/c*	CP	*x/c*	CP
0.020	0.385	0.000	0.460	0.000	0.385**	0.010	0.011
0.060	-0.084	0.020	0.330	0.020	0.299	0.020	-0.085
0.110	-0.391	0.040	0.161	0.060	0.047	0.060	-0.671
0.200	-1.068	0.060	-0.214	0.090	-0.474	0.110	-0.970
0.230	-1.028	0.090	-0.408	0.110	-0.664	0.140	-1.262
0.400	-0.853	0.130	-0.657	0.130	-0.938	0.190	-1.992**
0.490	-0.744	0.150	-0.919	0.150	-1.053	0.250	-1.273
0.590	-0.182	0.200	-1.002	0.210	-1.108	0.400	-0.881
0.630	-0.185	0.250	-1.076	0.250	-0.995	0.490	-0.735
0.700	-0.178	0.260	-1.056	0.340	-1.126	0.580	-0.653
0.750	-0.221	0.280	-1.089	0.370	-1.119	0.650	-0.670
0.810	-0.206	0.290	-1.101	0.400	-1.091	0.700	-0.657
0.840	-0.246	0.310	-0.887	0.410	-1.071**	0.750	-0.489
0.900	-0.176	0.320	-1.051	0.430	-1.136	0.800	-0.227
0.960	-0.073	0.340	-0.946	0.440	-1.121	0.830	-0.182
		0.350	-0.497**	0.460	-0.789	0.900	-0.066
		0.370	-0.994	0.490	-1.083	0.960	-0.001
		0.380	-1.090	0.500	-1.109		
		0.400	-1.036	0.520	-1.115		
		0.410	-0.894	0.540	-1.111		
		0.430	-1.027	0.550	-1.103		
		0.440	-0.846	0.580	-1.103		
		0.460	-1.066	0.600	-1.101		
		0.470	-1.040	0.610	-1.069		
		0.490	-1.045	0.650	-0.548		
		0.500	-1.045	0.700	-0.418		
		0.520	-1.014	0.750	-0.369		
		0.530	-0.960	0.820	-0.142		
		0.550	-1.044	0.890	-0.027		
		0.560	-1.044	0.900	-0.005		
		0.580	-1.019	0.960	0.077		
		0.590	-1.078				
		0.600	-0.940				
		0.640	-0.333				
		0.700	-0.284				
		0.750	-0.028				
		0.820	-0.129				
		0.870	-0.101				
		0.930	-0.016				
		0.960	0.028				
			Lower Surface				
0.020	-0.808	0.020	-0.406	0.020	-0.359	0.020	-0.077
0.110	-0.063	0.060	-0.114	0.060	0.095	0.060	-0.026
0.230	-0.017	0.090	-0.024	0.090	0.069	0.110	0.066
0.400	-0.054	0.120	0.068	0.120	0.016	0.250	-0.040
0.490	-0.066	0.200	-0.022	0.200	-0.026	0.400	-0.116
0.630	0.996**	0.260	0.017	0.250	-0.010	0.490	-0.177
0.750	0.006	0.400	-0.056	0.400	-0.097	0.580	-0.255
0.850	0.042	0.490	-0.088	0.490	-0.058	0.650	-0.107
0.900	0.131	0.580	-0.120	0.580	-0.186	0.750	0.149
0.960	0.113	0.640	0.059	0.650	-0.032	0.830	0.270
		0.750	0.179	0.750	-0.041	0.900	0.314
		0.870	0.211	0.890	0.327	0.960	0.257
		0.930	0.214	0.930	0.269		
		0.960	0.177	0.960	0.337		
CN =	0.450		0.591		0.653		0.682

Table J-2. Continued.

Flight 208, Wing sweep = 26°, Time = 14-58-46-000, MINF = 0.841, Camber = 10/2, ALPT = 9.15, BETA = 0.72, QINF = 580.5, RNPU = 4.6E+06, CNWP = 0.4966

η = 0.93		0.76		0.59		0.40	
			Upper Surface				
x/c	CP	*x/c*	CP	*x/c*	CP	*x/c*	CP
0.020	0.324	0.000	0.606	0.000	0.402**	0.010	-0.138
0.060	-0.152	0.020	0.209	0.020	0.172	0.020	-0.203
0.110	-0.462	0.040	0.063	0.060	-0.027	0.060	-0.776
0.200	-1.106	0.060	-0.331	0.090	-0.645	0.110	-1.070
0.230	-1.077	0.090	-0.500	0.110	-0.788	0.140	-1.351
0.400	-0.939	0.130	-0.732	0.130	-1.022	0.190	-2.018**
0.490	-0.566	0.150	-0.983	0.150	-1.112	0.250	-1.378
0.590	-0.181	0.200	-1.069	0.210	-1.159	0.400	-0.976
0.630	-0.216	0.250	-1.140	0.250	-0.993	0.490	-0.815
0.700	-0.212	0.260	-1.126	0.340	-1.212	0.580	-0.734
0.750	-0.262	0.280	-1.160	0.370	-1.208	0.650	-0.636
0.810	-0.243	0.290	-1.163	0.400	-1.164	0.700	-0.575
0.840	-0.267	0.310	-0.883	0.410	-1.072**	0.750	-0.324
0.900	-0.203	0.320	-1.124	0.430	-1.210	0.800	-0.201
0.960	-0.087	0.340	-0.944	0.440	-1.199	0.830	-0.174
		0.350	-0.497**	0.460	-0.782	0.900	-0.083
		0.370	-0.993	0.490	-1.173	0.960	-0.007
		0.380	-1.176	0.500	-1.195		
		0.400	-1.100	0.520	-1.192		
		0.410	-0.865	0.540	-1.180		
		0.430	-1.002	0.550	-0.835		
		0.440	-0.819	0.580	-0.636		
		0.460	-0.943	0.600	-0.648		
		0.470	-0.867	0.610	-0.566		
		0.490	-0.619	0.650	-0.626		
		0.500	-0.614	0.700	-0.503		
		0.520	-0.539	0.750	-0.490		
		0.530	-0.539	0.820	-0.346		
		0.550	-0.515	0.890	-0.166		
		0.560	-0.499	0.900	-0.190		
		0.580	-0.488	0.960	-0.085		
		0.590	-0.504				
		0.600	-0.468				
		0.640	-0.398				
		0.700	-0.393				
		0.750	-0.025				
		0.820	-0.242				
		0.870	-0.213				
		0.930	-0.163				
		0.960	-0.142				
			Lower Surface				
0.020	-0.708	0.020	-0.266	0.020	-0.143	0.020	0.213
0.110	-0.034	0.060	0.111	0.060	0.183	0.060	-0.005
0.230	0.029	0.090	0.080	0.090	0.151	0.110	0.159
0.400	-0.040	0.120	0.125	0.120	0.102	0.250	0.017
0.490	-0.062	0.200	0.023	0.200	0.015	0.400	-0.064
0.630	1.051**	0.260	0.060	0.250	0.045	0.490	-0.130
0.750	-0.012	0.400	-0.030	0.400	-0.052	0.580	-0.208
0.850	0.024	0.490	-0.077	0.490	-0.039	0.650	-0.089
0.900	0.118	0.580	-0.120	0.580	-0.153	0.750	0.164
0.960	0.108	0.640	0.035	0.650	-0.023	0.830	0.291
		0.750	0.147	0.750	-0.016	0.900	0.333
		0.870	0.200	0.890	0.307	0.960	0.254
		0.930	0.154	0.930	0.236		
		0.960	0.091	0.960	0.296		
CN =	0.482		0.599		0.731		0.764

Table J-2. Continued.

Flight 208, Wing sweep = 26°, Time = 14-58-50-500, MINF = 0.840, Camber = 10/2, ALPT = 10.26, BETA = 0.48, QINF = 582.8, RNPU = 4.6E+06, CNWP = 0.4567

η = 0.93		0.76		0.59		0.40	
			Upper Surface				
x/c	CP	*x/c*	CP	*x/c*	CP	*x/c*	CP
0.020	0.223	0.000	0.716	0.000	0.407**	0.010	-0.281
0.060	-0.250	0.020	0.085	0.020	0.031	0.020	-0.303
0.110	-0.543	0.040	-0.053	0.060	-0.145	0.060	-0.849
0.200	-1.142	0.060	-0.438	0.090	-0.761	0.110	-1.154
0.230	-1.094	0.090	-0.646	0.110	-0.891	0.140	-1.409
0.400	-0.535	0.130	-0.820	0.130	-1.116	0.190	-2.025**
0.490	-0.344	0.150	-1.043	0.150	-1.187	0.250	-1.450
0.590	-0.302	0.200	-1.118	0.210	-1.228	0.400	-1.077
0.630	-0.303	0.250	-1.114	0.250	-1.005	0.490	-0.930
0.700	-0.302	0.260	-0.903	0.340	-1.279	0.580	-0.607
0.750	-0.320	0.280	-1.007	0.370	-0.931	0.650	-0.372
0.810	-0.305	0.290	-0.926	0.400	-0.739	0.700	-0.328
0.840	-0.321	0.310	-0.700	0.410	-1.083**	0.750	-0.257
0.900	-0.236	0.320	-0.696	0.430	-0.717	0.800	-0.201
0.960	-0.142	0.340	-0.661	0.440	-0.686	0.830	-0.199
		0.350	-0.324**	0.460	-0.683	0.900	-0.126
		0.370	-0.603	0.490	-0.673	0.960	-0.067
		0.380	-0.635	0.500	-0.658		
		0.400	-0.591	0.520	-0.635		
		0.410	-0.633	0.540	-0.641		
		0.430	-0.603	0.550	-0.617		
		0.440	-0.593	0.580	-0.640		
		0.460	-0.588	0.600	-0.661		
		0.470	-0.574	0.610	-0.571		
		0.490	-0.523	0.650	-0.670		
		0.500	-0.550	0.700	-0.546		
		0.520	-0.494	0.750	-0.533		
		0.530	-0.539	0.820	-0.483		
		0.550	-0.520	0.890	-0.418		
		0.560	-0.526	0.900	-0.397		
		0.580	-0.507	0.960	-0.350		
		0.590	-0.532				
		0.600	-0.492				
		0.640	-0.446				
		0.700	-0.449				
		0.750	-0.048				
		0.820	-0.349				
		0.870	-0.376				
		0.930	-0.339				
		0.960	-0.326				
			Lower Surface				
0.020	-0.266	0.020	-0.076	0.020	-0.011	0.020	0.342
0.110	-0.017	0.060	0.193	0.060	0.246	0.060	-0.017
0.230	0.049	0.090	0.139	0.090	0.208	0.110	0.227
0.400	-0.037	0.120	0.163	0.120	0.152	0.250	0.057
0.490	-0.090	0.200	0.045	0.200	0.042	0.400	-0.035
0.630	1.032**	0.260	0.089	0.250	0.082	0.490	-0.108
0.750	-0.041	0.400	-0.024	0.400	-0.033	0.580	-0.200
0.850	-0.007	0.490	-0.082	0.490	-0.058	0.650	-0.094
0.900	0.085	0.580	-0.139	0.580	-0.159	0.750	0.153
0.960	0.061	0.640	0.003	0.650	-0.048	0.830	0.275
		0.750	0.123	0.750	-0.009	0.900	0.309
		0.870	0.141	0.890	0.250	0.960	0.217
		0.930	0.074	0.930	0.154		
		0.960	-0.001	0.960	0.172		
CN =	0.436		0.578		0.723		0.789

Table J-2. Continued.

Flight 224, Wing sweep = 26°, Time = 9-10-37-500, MINF = 0.847, Camber = 10/2, ALPT = 4.09, BETA = 0.57, QINF = 587.1, RNPU = 4.6E+06, CNWP = 0.1963

η = 0.93		0.76		0.59		0.40	
			Upper Surface				
x/c	CP	*x/c*	CP	*x/c*	CP	*x/c*	CP
0.020	0.609	0.000	0.080	0.000	3.160**	0.010	0.482
0.060	0.135	0.020	0.674	0.020	0.611	0.020	0.330
0.110	-0.228	0.040	0.377	0.060	-2.000**	0.060	-0.182
0.200	-0.884	0.060	0.064	0.090	-0.182	0.110	-0.523
0.230	-0.771	0.090	-0.148	0.110	-0.387	0.140	-0.946
0.400	-0.156	0.130	-0.424	0.130	-0.687	0.190	-1.994**
0.490	-0.173	0.150	-0.695	0.150	-0.841	0.250	-0.698
0.590	-0.225	0.200	-0.804	0.210	-0.836	0.400	-0.283
0.630	-0.223	0.250	-0.795	0.250	-0.798	0.490	-0.261
0.700	-0.216	0.260	-0.789	0.340	-0.271	0.580	-0.268
0.750	-0.230	0.280	-0.767	0.370	-0.246	0.650	-0.368
0.810	-0.203	0.290	-0.753	0.400	-0.237	0.700	-0.343
0.840	-0.194	0.310	-0.581	0.410	-0.764**	0.750	-0.376
0.900	-0.106	0.320	-0.466	0.430	-0.260	0.800	-0.456
0.960	0.012	0.340	-0.240	0.440	-0.256	0.830	-0.408
		0.350	-0.188**	0.460	-0.263	0.900	-0.166
		0.370	-0.180	0.490	-0.237	0.960	0.006
		0.380	-0.202	0.500	-0.274		
		0.400	-0.155	0.520	-0.269		
		0.410	-0.211	0.540	-0.259		
		0.430	-0.206	0.550	-0.229		
		0.440	-0.199	0.580	-0.227		
		0.460	-0.215	0.600	-0.267		
		0.470	-0.242	0.610	-0.300		
		0.490	-0.230	0.650	2.460**		
		0.500	-0.232	0.700	-0.527		
		0.520	-0.240	0.750	-0.417		
		0.530	-0.246	0.820	-0.327		
		0.550	-0.269	0.890	-0.104		
		0.560	-0.264	0.900	-0.063		
		0.580	-0.250	0.960	0.046		
		0.590	-0.281				
		0.600	-0.286				
		0.640	-0.490				
		0.700	-0.285				
		0.750	-0.064**				
		0.820	-0.262				
		0.870	-0.213				
		0.930	-0.075				
		0.960	-0.012				
			Lower Surface				
0.020	-0.757	0.020	-0.957	0.020	-1.490	0.020	-0.890
0.110	-0.591	0.060	-0.979	0.060	-0.890	0.060	0.944**
0.230	-0.189	0.090	-0.810	0.090	0.580**	0.110	-0.244
0.400	-0.064	0.120	-0.543	0.120	-0.207	0.250	-0.259
0.490	-0.049	0.200	-0.162	0.200	-0.142	0.400	-0.301
0.630	0.968**	0.260	-0.165	0.250	-0.200	0.490	-0.337
0.750	0.040	0.400	-0.126	0.400	-0.244	0.580	-0.375
0.850	0.084	0.490	-0.121	0.490	-0.076	0.650	-0.155
0.900	0.142	0.580	-0.096	0.580	-0.205	0.750	0.108
0.960	0.149	0.640	0.051	0.650	-0.067	0.830	0.264
		0.750	0.151	0.750	-0.041	0.900	0.312
		0.870	0.213	0.890	0.258	0.960	0.272
		0.930	0.172	0.930	0.220		
		0.960	0.147	0.960	-2.547**		
CN =	0.154		0.180		0.204		0.243

Table J-2. Continued.

Flight 224, Wing sweep = 26°, Time = 9-11-20-000, MINF = 0.849, Camber = 10/2, ALPT = 8.01, BETA = 0.34, QINF = 587.7, RNPU = 4.6E+06, CNWP = 0.4529

η = 0.93		0.76		0.59		0.40	
			Upper Surface				
x/c	CP	*x/c*	CP	*x/c*	CP	*x/c*	CP
0.020	0.426	0.000	0.442	0.000	3.166**	0.010	0.082
0.060	-0.060	0.020	0.400	0.020	0.334	0.020	-0.026
0.110	-0.388	0.040	0.155	0.060	-1.989**	0.060	-0.598
0.200	-0.985	0.060	-0.165	0.090	-0.400	0.110	-0.886
0.230	-0.933	0.090	-0.340	0.110	-0.604	0.140	-1.147
0.400	-0.791	0.130	-0.607	0.130	-0.888	0.190	-1.983**
0.490	-0.672	0.150	-0.865	0.150	-0.972	0.250	-1.152
0.590	-0.185	0.200	-0.955	0.210	-0.989	0.400	-0.838
0.630	-0.165	0.250	-0.978	0.250	-0.980	0.490	-0.664
0.700	-0.162	0.260	-0.979	0.340	-1.045	0.580	-0.588
0.750	-0.203	0.280	-0.999	0.370	-1.045	0.650	-0.628
0.810	-0.194	0.290	-0.999	0.400	-1.008	0.700	-0.612
0.840	-0.197	0.310	-0.864	0.410	-0.755**	0.750	-0.580
0.900	-0.145	0.320	-0.978	0.430	-1.040	0.800	-0.236
0.960	-0.030	0.340	-0.935	0.440	-1.024	0.830	-0.155
		0.350	-0.469**	0.460	-0.757	0.900	-0.051
		0.370	-0.957	0.490	-0.986	0.960	0.002
		0.380	-1.008	0.500	-1.027		
		0.400	-0.933	0.520	-1.026		
		0.410	-0.903	0.540	-1.023		
		0.430	-0.939	0.550	-0.976		
		0.440	-0.851	0.580	-0.978		
		0.460	-0.969	0.600	-0.991		
		0.470	-0.959	0.610	-0.977		
		0.490	-0.942	0.650	2.467**		
		0.500	-0.949	0.700	-0.461		
		0.520	-0.936	0.750	-0.355		
		0.530	-0.925	0.820	-0.137		
		0.550	-0.960	0.890	-0.010		
		0.560	-0.958	0.900	0.017		
		0.580	-0.934	0.960	0.082		
		0.590	-0.975				
		0.600	-0.959				
		0.640	-0.336				
		0.700	-0.270				
		0.750	-0.029**				
		0.820	-0.092				
		0.870	-0.085				
		0.930	-0.008				
		0.960	0.036				
			Lower Surface				
0.020	-0.842	0.020	-0.447	0.020	-0.439	0.020	-0.099
0.110	-0.101	0.060	-0.186	0.060	0.073	0.060	0.953**
0.230	-0.022	0.090	-0.066	0.090	0.588**	0.110	0.116
0.400	-0.050	0.120	0.047	0.120	0.043	0.250	-0.040
0.490	-0.055	0.200	-0.027	0.200	-0.022	0.400	-0.113
0.630	0.939**	0.260	0.029	0.250	-0.016	0.490	-0.177
0.750	0.019	0.400	-0.054	0.400	-0.101	0.580	-0.261
0.850	0.067	0.490	-0.089	0.490	-0.047	0.650	-0.101
0.900	0.127	0.580	-0.105	0.580	-0.166	0.750	0.143
0.960	0.129	0.640	0.065	0.650	-0.032	0.830	0.298
		0.750	0.184	0.750	-0.024	0.900	0.330
		0.870	0.248	0.890	0.315	0.960	0.267
		0.930	0.211	0.930	0.263		
		0.960	0.180	0.960	-2.535**		
CN =	0.407		0.564		0.629		0.646

Table J-2. Continued.

Flight 224, Wing sweep = 26°, Time = 9-11-33-500, MINF = 0.859, Camber = 10/2, ALPT = 7.99, BETA = 0.25, QINF = 612.7, RNPU = 4.8E+06, CNWP = 0.4575

η = 0.93		0.76		0.59		0.40	
			Upper Surface				
x/c	CP	*x/c*	CP	*x/c*	CP	*x/c*	CP
0.020	0.444	0.000	0.427	0.000	3.001**	0.010	0.115
0.060	-0.036	0.020	0.461	0.020	0.356	0.020	-0.002
0.110	-0.353	0.040	0.182	0.060	-1.944**	0.060	-0.578
0.200	-1.022	0.060	-0.136	0.090	-0.373	0.110	-0.865
0.230	-0.928	0.090	-0.314	0.110	-0.577	0.140	-1.133
0.400	-0.795	0.130	-0.587	0.130	-0.861	0.190	-1.938**
0.490	-0.682	0.150	-0.834	0.150	-0.969	0.250	-1.135
0.590	-0.243	0.200	-0.939	0.210	-0.975	0.400	-0.825
0.630	-0.157	0.250	-0.978	0.250	-0.976	0.490	-0.680
0.700	-0.143	0.260	-0.960	0.340	-1.025	0.580	-0.584
0.750	-0.184	0.280	-0.981	0.370	-1.029	0.650	-0.637
0.810	-0.176	0.290	-0.977	0.400	-1.004	0.700	-0.622
0.840	-0.189	0.310	-0.865	0.410	-0.760**	0.750	-0.644
0.900	-0.146	0.320	-0.955	0.430	-1.035	0.800	-0.301
0.960	-0.033	0.340	-0.933	0.440	-1.025	0.830	-0.201
		0.350	-0.473**	0.460	-0.762	0.900	-0.064
		0.370	-0.937	0.490	-1.006	0.960	-0.013
		0.380	-0.988	0.500	-1.021		
		0.400	-0.872	0.520	-1.017		
		0.410	-0.903	0.540	-1.012		
		0.430	-0.938	0.550	-0.974		
		0.440	-0.853	0.580	-0.955		
		0.460	-0.961	0.600	-0.989		
		0.470	-0.953	0.610	-0.965		
		0.490	-0.943	0.650	2.330**		
		0.500	-0.943	0.700	-0.669		
		0.520	-0.936	0.750	-0.431		
		0.530	-0.916	0.820	-0.175		
		0.550	-0.953	0.890	-0.026		
		0.560	-0.948	0.900	0.011		
		0.580	-0.937	0.960	0.067		
		0.590	-0.970				
		0.600	-0.957				
		0.640	-0.385				
		0.700	-0.340				
		0.750	-0.043**				
		0.820	-0.120				
		0.870	-0.080				
		0.930	-0.008				
		0.960	0.014				
			Lower Surface				
0.020	-0.831	0.020	-0.462	0.020	-0.467	0.020	-0.109
0.110	-0.173	0.060	-0.243	0.060	0.016	0.060	0.877**
0.230	-0.038	0.090	-0.121	0.090	0.528**	0.110	0.106
0.400	-0.050	0.120	0.016	0.120	0.028	0.250	-0.050
0.490	-0.064	0.200	-0.041	0.200	-0.036	0.400	-0.131
0.630	0.864**	0.260	0.014	0.250	-0.031	0.490	-0.194
0.750	0.011	0.400	-0.067	0.400	-0.127	0.580	-0.295
0.850	0.060	0.490	-0.095	0.490	-0.046	0.650	-0.122
0.900	0.129	0.580	-0.122	0.580	-0.188	0.750	0.132
0.960	0.127	0.640	0.051	0.650	-0.042	0.830	0.298
		0.750	0.171	0.750	-0.035	0.900	0.325
		0.870	0.241	0.890	0.308	0.960	0.261
		0.930	0.196	0.930	0.252		
		0.960	0.163	0.960	-2.468**		
CN =	0.394		0.549		0.630		0.638

Table J-2. Continued.

Flight 208, Wing sweep = 26°, Time = 14-52-18-000, MINF = 0.862, Camber = 5/10, ALPT = 3.07, BETA = 0.08, QINF = 611.4, RNPU = 4.8E+06, CNWP = 0.1502

η = 0.93		0.76		0.59		0.40	
			Upper Surface				
x/c	CP	*x/c*	CP	*x/c*	CP	*x/c*	CP
0.020	0.461	0.000	0.421	0.000	0.302**	0.010	0.145
0.060	0.105	0.020	0.395	0.020	0.392	0.020	0.041
0.110	-0.157	0.040	0.288	0.060	0.265	0.060	-0.256
0.200	-0.238	0.060	0.012	0.090	-0.193	0.110	-0.443
0.230	-0.280	0.090	-0.136	0.110	-0.343	0.140	-0.747
0.400	-0.186	0.130	-0.315	0.130	-0.521	0.190	-1.920**
0.490	-0.191	0.150	-0.517	0.150	-0.640	0.250	-0.418
0.590	-0.253	0.200	-0.343	0.210	-0.619	0.400	-0.293
0.630	-0.296	0.250	-0.301	0.250	-0.271	0.490	-0.280
0.700	-0.395	0.260	-0.290	0.340	-0.289	0.580	-0.291
0.750	-0.819	0.280	-0.309	0.370	-0.324	0.650	-0.393
0.810	-0.747	0.290	-0.307	0.400	-0.304	0.700	-0.356
0.840	-0.819	0.310	-0.300	0.410	0.294**	0.750	-0.428
0.900	-0.272	0.320	-0.304	0.430	-0.316	0.800	-0.931
0.960	-0.267	0.340	-0.286	0.440	-0.298	0.830	-0.929
		0.350	-0.256**	0.460	-0.300	0.900	-0.421
		0.370	-0.272	0.490	-0.254	0.960	-0.414
		0.380	-0.288	0.500	-0.303		
		0.400	-0.256	0.520	-0.279		
		0.410	-0.284	0.540	-0.269		
		0.430	-0.264	0.550	-0.264		
		0.440	-0.246	0.580	-0.268		
		0.460	-0.267	0.600	-0.288		
		0.470	-0.281	0.610	-0.302		
		0.490	-0.273	0.650	-0.664		
		0.500	-0.273	0.700	-0.524		
		0.520	-0.276	0.750	-0.478		
		0.530	-0.285	0.820	-0.969		
		0.550	-0.312	0.890	-0.441		
		0.560	-0.291	0.900	-0.499		
		0.580	-0.264	0.960	-0.451		
		0.590	-0.307				
		0.600	-0.302				
		0.640	-0.555				
		0.700	-0.482				
		0.750	-0.099				
		0.820	-0.565				
		0.870	-0.341				
		0.930	-0.315				
		0.960	-0.321				
			Lower Surface				
0.020	-1.343	0.020	-0.906	0.020	-1.235	0.020	-0.455
0.110	-0.475	0.060	-0.975	0.060	-0.869	0.060	-0.058
0.230	-0.220	0.090	-0.771	0.090	-0.414	0.110	-0.358
0.400	0.002	0.120	-0.440	0.120	-0.437	0.250	-0.342
0.490	0.023	0.200	-0.220	0.200	-0.256	0.400	-0.316
0.630	0.908**	0.260	-0.134	0.250	-0.303	0.490	-0.276
0.750	0.167	0.400	-0.095	0.400	-0.192	0.580	-0.201
0.850	0.197	0.490	-0.049	0.490	-0.113	0.650	0.030
0.900	0.274	0.580	0.013	0.580	-0.047	0.750	0.269
0.960	0.122	0.640	0.240	0.650	-0.103	0.830	0.377
		0.750	0.295	0.750	-0.050	0.900	0.449
		0.870	0.365	0.890	0.415	0.960	0.305
		0.930	0.283	0.930	0.328		
		0.960	0.163	0.960	0.333		
CN =	0.271		0.253		0.268		0.350

Table J-2. Continued.

Flight 208, Wing sweep = 26°, Time = 14-53-36-000, MINF = 0.857, Camber = 5/10, ALPT = 3.00, BETA = 0.17, QINF = 598.7, RNPU = 4.7E+06, CNWP = 0.1234

η = 0.93		0.76		0.59		0.40	
			Upper Surface				
x/c	CP	*x/c*	CP	*x/c*	CP	*x/c*	CP
0.020	0.470	0.000	0.407	0.000	0.284**	0.010	0.163
0.060	0.122	0.020	0.409	0.020	0.408	0.020	0.056
0.110	-0.151	0.040	0.302	0.060	0.234	0.060	-0.247
0.200	-0.229	0.060	0.020	0.090	-0.191	0.110	-0.441
0.230	-0.252	0.090	-0.131	0.110	-0.342	0.140	-0.754
0.400	-0.186	0.130	-0.304	0.130	-0.524	0.190	-1.946**
0.490	-0.182	0.150	-0.495	0.150	-0.637	0.250	-0.257
0.590	-0.260	0.200	-0.387	0.210	-0.337	0.400	-0.295
0.630	-0.295	0.250	-0.292	0.250	-0.289	0.490	-0.282
0.700	-0.380	0.260	-0.278	0.340	-0.284	0.580	-0.287
0.750	-0.844	0.280	-0.297	0.370	-0.316	0.650	-0.384
0.810	-0.769	0.290	-0.294	0.400	-0.296	0.700	-0.350
0.840	-0.810	0.310	-0.284	0.410	-2.445**	0.750	-0.415
0.900	-0.235	0.320	-0.286	0.430	-0.304	0.800	-2.348
0.960	-0.237	0.340	-0.276	0.440	-0.289	0.830	-0.702
		0.350	-0.255**	0.460	-0.299	0.900	-0.392
		0.370	-0.264	0.490	-0.274	0.960	-0.412
		0.380	-0.279	0.500	-0.298		
		0.400	-0.248	0.520	-0.277		
		0.410	-0.277	0.540	-0.274		
		0.430	-0.263	0.550	-0.264		
		0.440	-0.242	0.580	-0.278		
		0.460	-0.268	0.600	-0.313		
		0.470	-0.266	0.610	-0.304		
		0.490	-0.266	0.650	-0.653		
		0.500	-0.270	0.700	-0.540		
		0.520	-0.282	0.750	-0.473		
		0.530	-0.275	0.820	-1.030		
		0.550	-0.308	0.890	-0.393		
		0.560	-0.289	0.900	-0.458		
		0.580	-0.268	0.960	-0.400		
		0.590	-0.301				
		0.600	-0.286				
		0.640	-0.557				
		0.700	-0.475				
		0.750	-0.083				
		0.820	-0.557				
		0.870	-0.328				
		0.930	-0.284				
		0.960	-0.292				
			Lower Surface				
0.020	-1.346	0.020	-2.347	0.020	-1.254	0.020	-0.476
0.110	-0.463	0.060	-2.418	0.060	-0.885	0.060	-0.044
0.230	-0.215	0.090	-2.202	0.090	-0.421	0.110	-0.375
0.400	0.000	0.120	-0.413	0.120	-0.447	0.250	-0.344
0.490	0.025	0.200	-0.213	0.200	-0.230	0.400	-0.319
0.630	0.928**	0.260	-0.132	0.250	-0.285	0.490	-0.270
0.750	0.170	0.400	-0.091	0.400	-0.194	0.580	-0.194
0.850	0.202	0.490	-0.049	0.490	-0.098	0.650	0.031
0.900	0.275	0.580	0.013	0.580	-0.051	0.750	0.274
0.960	0.131	0.640	0.241	0.650	-0.090	0.830	0.373
		0.750	0.300	0.750	-0.042	0.900	0.448
		0.870	0.361	0.890	0.413	0.960	0.309
		0.930	0.273	0.930	0.328		
		0.960	0.166	0.960	0.323		
CN =	0.268		0.133		0.258		0.373

Table J-2. Continued.

Flight 208, Wing sweep = 26°, Time = 14-54-9-500, MINF = 0.852, Camber = 5/10, ALPT = 8.03, BETA = 0.40, QINF = 604.5, RNPU = 4.8E+06, CNWP = 0.4939

η = 0.93		0.76		0.59		0.40	
			Upper Surface				
x/c	CP	*x/c*	CP	*x/c*	CP	*x/c*	CP
0.020	0.039	0.000	0.829	0.000	0.336**	0.010	-0.704
0.060	-0.252	0.020	-0.173	0.020	-0.226	0.020	-0.745
0.110	-0.440	0.040	-0.173	0.060	-0.186	0.060	-0.795
0.200	-0.863	0.060	-0.442	0.090	-0.716	0.110	-1.008
0.230	-0.810	0.090	-0.562	0.110	-0.779	0.140	-1.176
0.400	-0.714	0.130	-0.658	0.130	-0.887	0.190	-1.970**
0.490	-0.600	0.150	-0.808	0.150	-0.937	0.250	-1.184
0.590	-0.512	0.200	-0.853	0.210	-0.982	0.400	-0.845
0.630	-0.350	0.250	-0.942	0.250	-0.966	0.490	-0.689
0.700	-0.400	0.260	-0.926	0.340	-1.028	0.580	-0.588
0.750	-0.860	0.280	-0.953	0.370	-1.033	0.650	-0.646
0.810	-0.809	0.290	-0.951	0.400	-1.000	0.700	-0.621
0.840	-0.882	0.310	-0.877	0.410	-2.464**	0.750	-0.652
0.900	-0.471	0.320	-0.922	0.430	-1.039	0.800	-0.626
0.960	-0.440	0.340	-0.914	0.440	-1.017	0.830	-0.501
		0.350	-0.398**	0.460	-0.784	0.900	-0.388
		0.370	-0.921	0.490	-0.991	0.960	-0.324
		0.380	-0.972	0.500	-1.032		
		0.400	-0.907	0.520	-1.034		
		0.410	-0.894	0.540	-1.035		
		0.430	-0.924	0.550	-1.014		
		0.440	-0.844	0.580	-1.020		
		0.460	-0.957	0.600	-1.031		
		0.470	-0.939	0.610	-1.010		
		0.490	-0.928	0.650	-0.982		
		0.500	-0.934	0.700	-0.796		
		0.520	-0.915	0.750	-0.718		
		0.530	-0.906	0.820	-0.337		
		0.550	-0.936	0.890	-0.277		
		0.560	-0.945	0.900	-0.279		
		0.580	-0.918	0.960	-0.270		
		0.590	-0.961				
		0.600	-0.944				
		0.640	-0.893				
		0.700	-0.500				
		0.750	-0.031				
		0.820	-0.274				
		0.870	-0.264				
		0.930	-0.268				
		0.960	-0.263				
			Lower Surface				
0.020	-0.275	0.020	-0.137	0.020	-0.011	0.020	0.369
0.110	-0.115	0.060	0.088	0.060	0.159	0.060	-0.041
0.230	0.045	0.090	0.044	0.090	0.103	0.110	0.116
0.400	0.011	0.120	0.044	0.120	-0.002	0.250	-0.045
0.490	0.022	0.200	0.046	0.200	0.035	0.400	-0.079
0.630	0.876**	0.260	0.018	0.250	0.000	0.490	-0.087
0.750	0.164	0.400	0.004	0.400	-0.012	0.580	-0.047
0.850	0.183	0.490	0.026	0.490	-0.041	0.650	0.144
0.900	0.277	0.580	0.064	0.580	0.029	0.750	0.388
0.960	0.101	0.640	0.284	0.650	-0.048	0.830	0.480
		0.750	0.338	0.750	-0.044	0.900	0.529
		0.870	0.417	0.890	0.495	0.960	0.350
		0.930	0.333	0.930	0.398		
		0.960	0.212	0.960	0.400		
CN =	0.643		0.766		0.803		0.864

Table J-2. Continued.

Flight 208, Wing sweep = 26°, Time = 14-54-11-000, MINF = 0.851, Camber = 5/10, ALPT = 7.93, BETA = -0.24, QINF = 606.5, RNPU = 4.8E+06, CNWP = 0.4625

η = 0.93		0.76		0.59		0.40	
			Upper Surface				
x/c	CP	*x/c*	CP	*x/c*	CP	*x/c*	CP
0.020	0.062	0.000	0.819	0.000	0.387**	0.010	-0.715
0.060	-0.236	0.020	-0.139	0.020	-0.201	0.020	-0.715
0.110	-0.424	0.040	-0.159	0.060	-0.189	0.060	-0.785
0.200	-0.860	0.060	-0.440	0.090	-0.691	0.110	-0.982
0.230	-0.805	0.090	-0.531	0.110	-0.759	0.140	-1.171
0.400	-0.701	0.130	-0.637	0.130	-0.866	0.190	-1.971**
0.490	-0.583	0.150	-0.800	0.150	-0.925	0.250	-1.166
0.590	-0.451	0.200	-0.847	0.210	-0.960	0.400	-0.825
0.630	-0.334	0.250	-0.930	0.250	-0.969	0.490	-0.675
0.700	-0.373	0.260	-0.913	0.340	-1.003	0.580	-0.564
0.750	-0.880	0.280	-0.949	0.370	-1.018	0.650	-0.618
0.810	-0.838	0.290	-0.940	0.400	-0.979	0.700	-0.599
0.840	-0.906	0.310	-0.881	0.410	-2.463**	0.750	-0.628
0.900	-0.447	0.320	-0.915	0.430	-1.020	0.800	-0.686
0.960	-0.417	0.340	-0.918	0.440	-1.002	0.830	-0.534
		0.350	-0.404**	0.460	-0.788	0.900	-0.444
		0.370	-0.915	0.490	-0.972	0.960	-0.370
		0.380	-0.965	0.500	-1.029		
		0.400	-0.902	0.520	-1.014		
		0.410	-0.898	0.540	-1.028		
		0.430	-0.903	0.550	-1.005		
		0.440	-0.848	0.580	-0.999		
		0.460	-0.936	0.600	-1.004		
		0.470	-0.924	0.610	-0.974		
		0.490	-0.913	0.650	-0.887		
		0.500	-0.918	0.700	-0.719		
		0.520	-0.908	0.750	-0.675		
		0.530	-0.891	0.820	-0.346		
		0.550	-0.923	0.890	-0.277		
		0.560	-0.927	0.900	-0.276		
		0.580	-0.902	0.960	-0.262		
		0.590	-0.944				
		0.600	-0.942				
		0.640	-0.897				
		0.700	-0.783				
		0.750	-0.038				
		0.820	-0.253				
		0.870	-0.252				
		0.930	-0.247				
		0.960	-0.247				
			Lower Surface				
0.020	-0.312	0.020	-0.171	0.020	-0.037	0.020	0.308
0.110	-0.124	0.060	0.072	0.060	0.132	0.060	-0.048
0.230	0.039	0.090	0.026	0.090	0.089	0.110	0.112
0.400	0.009	0.120	0.037	0.120	-0.020	0.250	-0.059
0.490	0.022	0.200	0.037	0.200	0.025	0.400	-0.083
0.630	0.866**	0.260	0.008	0.250	-0.003	0.490	-0.098
0.750	0.164	0.400	0.004	0.400	-0.020	0.580	-0.056
0.850	0.188	0.490	0.026	0.490	-0.044	0.650	0.137
0.900	0.275	0.580	0.066	0.580	0.026	0.750	0.383
0.960	0.097	0.640	0.297	0.650	-0.046	0.830	0.475
		0.750	0.338	0.750	-0.049	0.900	0.531
		0.870	0.423	0.890	0.501	0.960	0.358
		0.930	0.335	0.930	0.393		
		0.960	0.218	0.960	0.398		
CN =	0.630		0.772		0.778		0.853

Table J-2. Continued.

Flight 224, Wing sweep = 26°, Time = 9-7-47-000, MINF = 0.849, Camber = 5/10, ALPT = 3.03, BETA = 0.43, QINF = 588.2, RNPU = 4.6E+06, CNWP = 0.1959

η = 0.93		0.76		0.59		0.40	
			Upper Surface				
x/c	CP	*x/c*	CP	*x/c*	CP	*x/c*	CP
0.020	0.480	0.000	0.418	0.000	3.161**	0.010	0.202
0.060	0.119	0.020	0.455	0.020	0.408	0.020	0.089
0.110	-0.155	0.040	0.259	0.060	-3.484**	0.060	-0.227
0.200	-0.223	0.060	0.038	0.090	-0.158	0.110	-0.399
0.230	-0.247	0.090	-0.094	0.110	-0.298	0.140	-0.704
0.400	-0.161	0.130	-0.263	0.130	-0.504	0.190	-1.984**
0.490	-0.172	0.150	-0.388	0.150	-0.606	0.250	-0.238
0.590	-0.250	0.200	-0.373	0.210	-0.291	0.400	-0.269
0.630	-0.283	0.250	-0.268	0.250	-0.272	0.490	-0.237
0.700	-0.330	0.260	-0.270	0.340	-0.287	0.580	-0.265
0.750	-0.683	0.280	-0.276	0.370	-0.304	0.650	-0.381
0.810	-0.532	0.290	-0.281	0.400	-0.280	0.700	-0.334
0.840	-0.558	0.310	-0.274	0.410	-0.757**	0.750	-0.402
0.900	-0.221	0.320	-0.275	0.430	-0.299	0.800	-0.929
0.960	-0.210	0.340	-0.266	0.440	-0.290	0.830	-0.705
		0.350	-0.225**	0.460	-0.289	0.900	-0.389
		0.370	-0.244	0.490	-0.254	0.960	-0.388
		0.380	-0.267	0.500	-0.289		
		0.400	-0.208	0.520	-0.272		
		0.410	-0.259	0.540	-0.266		
		0.430	-0.245	0.550	-0.234		
		0.440	-0.234	0.580	-0.231		
		0.460	-0.244	0.600	-0.272		
		0.470	-0.258	0.610	-0.300		
		0.490	-0.248	0.650	2.463**		
		0.500	-0.248	0.700	-0.527		
		0.520	-0.262	0.750	-0.446		
		0.530	-0.261	0.820	-0.856		
		0.550	-0.295	0.890	-0.384		
		0.560	-0.281	0.900	-0.448		
		0.580	-0.253	0.960	-0.385		
		0.590	-0.285				
		0.600	-0.289				
		0.640	-0.542				
		0.700	-0.461				
		0.750	-0.073**				
		0.820	-0.530				
		0.870	-0.290				
		0.930	-0.283				
		0.960	-0.292				
			Lower Surface				
0.020	-1.343	0.020	-0.927	0.020	-1.179	0.020	-0.392
0.110	-0.441	0.060	-0.999	0.060	-0.655	0.060	0.949**
0.230	-0.183	0.090	-0.795	0.090	0.585**	0.110	-0.268
0.400	0.005	0.120	-0.300	0.120	-0.363	0.250	-0.324
0.490	0.045	0.200	-0.189	0.200	-0.183	0.400	-0.278
0.630	0.972**	0.260	-0.108	0.250	-0.264	0.490	-0.231
0.750	0.173	0.400	-0.066	0.400	-0.169	0.580	-0.179
0.850	0.216	0.490	-0.031	0.490	-0.063	0.650	0.064
0.900	0.267	0.580	0.035	0.580	-0.024	0.750	0.286
0.960	0.139	0.640	0.249	0.650	-0.078	0.830	0.408
		0.750	0.307	0.750	-0.027	0.900	0.469
		0.870	0.386	0.890	0.415	0.960	0.333
		0.930	0.276	0.930	0.332		
		0.960	0.170	0.960	-2.536**		
CN =	0.238		0.273		0.265		0.316

Table J-2. Continued.

Flight 224, Wing sweep = 26°, Time = 9-8-12-500, MINF = 0.858, Camber = 5/11, ALPT = 4.08, BETA = 0.28, QINF = 600.7, RNPU = 4.7E+06, CNWP = 0.2656

η = 0.93		0.76		0.59		0.40	
			Upper Surface				
x/c	CP	*x/c*	CP	*x/c*	CP	*x/c*	CP
0.020	0.419	0.000	0.507	0.000	3.095**	0.010	0.078
0.060	0.056	0.020	0.370	0.020	0.320	0.020	-0.028
0.110	-0.204	0.040	0.191	0.060	-3.411**	0.060	-0.316
0.200	-0.184	0.060	-0.017	0.090	-0.212	0.110	-0.459
0.230	-0.260	0.090	-0.157	0.110	-0.351	0.140	-0.760
0.400	-0.176	0.130	-0.352	0.130	-0.541	0.190	-1.942**
0.490	-0.181	0.150	-0.538	0.150	-0.647	0.250	-0.570
0.590	-0.248	0.200	-0.583	0.210	-0.651	0.400	-0.281
0.630	-0.279	0.250	-0.275	0.250	-0.641	0.490	-0.260
0.700	-0.388	0.260	-0.230	0.340	-0.243	0.580	-0.285
0.750	-0.688	0.280	-0.240	0.370	-0.293	0.650	-0.388
0.810	-0.610	0.290	-0.262	0.400	-0.281	0.700	-0.353
0.840	-0.634	0.310	-0.275	0.410	-0.741**	0.750	-0.429
0.900	-0.262	0.320	-0.282	0.430	-0.315	0.800	-0.909
0.960	-0.244	0.340	-0.282	0.440	-0.299	0.830	-0.808
		0.350	-0.207**	0.460	-0.305	0.900	-0.399
		0.370	-0.266	0.490	-0.275	0.960	-0.412
		0.380	-0.289	0.500	-0.310		
		0.400	-0.236	0.520	-0.283		
		0.410	-0.281	0.540	-0.280		
		0.430	-0.263	0.550	-0.247		
		0.440	-0.252	0.580	-0.234		
		0.460	-0.259	0.600	-0.281		
		0.470	-0.271	0.610	-0.307		
		0.490	-0.267	0.650	2.411**		
		0.500	-0.267	0.700	-0.525		
		0.520	-0.272	0.750	-0.451		
		0.530	-0.278	0.820	-0.894		
		0.550	-0.311	0.890	-0.426		
		0.560	-0.290	0.900	-0.478		
		0.580	-0.257	0.960	-0.428		
		0.590	-0.277				
		0.600	-0.286				
		0.640	-0.532				
		0.700	-0.465				
		0.750	-0.064**				
		0.820	-0.532				
		0.870	-0.313				
		0.930	-0.298				
		0.960	-0.306				
			Lower Surface				
0.020	-1.278	0.020	-0.907	0.020	-1.069	0.020	-0.186
0.110	-0.233	0.060	-0.978	0.060	-0.334	0.060	0.929**
0.230	-0.143	0.090	-0.363	0.090	0.573**	0.110	-0.222
0.400	-0.006	0.120	-0.127	0.120	-0.253	0.250	-0.278
0.490	0.037	0.200	-0.138	0.200	-0.148	0.400	-0.239
0.630	0.952**	0.260	-0.115	0.250	-0.229	0.490	-0.226
0.750	0.183	0.400	-0.057	0.400	-0.151	0.580	-0.168
0.850	0.215	0.490	-0.023	0.490	-0.054	0.650	0.074
0.900	0.272	0.580	0.044	0.580	-0.018	0.750	0.304
0.960	0.128	0.640	0.256	0.650	-0.069	0.830	0.431
		0.750	0.317	0.750	-0.034	0.900	0.487
		0.870	0.388	0.890	0.436	0.960	0.347
		0.930	0.291	0.930	0.351		
		0.960	0.179	0.960	-2.483**		
CN =	0.291		0.331		0.363		0.410

Table J-2. Continued.

Flight 224, Wing sweep = 26°, Time = 9-8-18-500, MINF = 0.858, Camber = 5/11, ALPT = 5.12, BETA = 0.22, QINF = 598.5, RNPU = 4.7E+06, CNWP = 0.3537

η = 0.93		0.76		0.59		0.40	
			Upper Surface				
x/c	CP	*x/c*	CP	*x/c*	CP	*x/c*	CP
0.020	0.335	0.000	0.598	0.000	3.114**	0.010	-0.054
0.060	-0.036	0.020	0.264	0.020	0.201	0.020	-0.128
0.110	-0.296	0.040	0.105	0.060	-3.417**	0.060	-0.509
0.200	-0.705	0.060	-0.104	0.090	-0.294	0.110	-0.623
0.230	-0.551	0.090	-0.232	0.110	-0.427	0.140	-0.836
0.400	-0.155	0.130	-0.415	0.130	-0.619	0.190	-1.943**
0.490	-0.180	0.150	-0.604	0.150	-0.710	0.250	-0.629
0.590	-0.252	0.200	-0.646	0.210	-0.718	0.400	-0.373
0.630	-0.281	0.250	-0.695	0.250	-0.734	0.490	-0.311
0.700	-0.398	0.260	-0.696	0.340	-0.765	0.580	-0.316
0.750	-0.861	0.280	-0.699	0.370	-0.767	0.650	-0.403
0.810	-0.724	0.290	-0.697	0.400	-0.530	0.700	-0.376
0.840	-0.768	0.310	-0.666	0.410	-0.737**	0.750	-0.439
0.900	-0.275	0.320	-0.672	0.430	-0.294	0.800	-0.906
0.960	-0.266	0.340	-0.672	0.440	-0.255	0.830	-0.776
		0.350	-0.363**	0.460	-0.249	0.900	-0.393
		0.370	-0.655	0.490	-0.216	0.960	-0.431
		0.380	-0.683	0.500	-0.248		
		0.400	-0.395	0.520	-0.226		
		0.410	-0.232	0.540	-0.234		
		0.430	-0.157	0.550	-0.204		
		0.440	-0.147	0.580	-0.228		
		0.460	-0.143	0.600	-0.250		
		0.470	-0.162	0.610	-0.281		
		0.490	-0.166	0.650	2.427**		
		0.500	-0.180	0.700	-0.504		
		0.520	-0.188	0.750	-0.420		
		0.530	-0.205	0.820	-1.036		
		0.550	-0.242	0.890	-0.421		
		0.560	-0.238	0.900	-0.479		
		0.580	-0.228	0.960	-0.426		
		0.590	-0.262				
		0.600	-0.270				
		0.640	-0.524				
		0.700	-0.446				
		0.750	-0.041**				
		0.820	-0.565				
		0.870	-0.404				
		0.930	-0.301				
		0.960	-0.315				
			Lower Surface				
0.020	-1.211	0.020	-0.904	0.020	-0.887	0.020	-0.070
0.110	-0.148	0.060	-0.355	0.060	-0.114	0.060	0.940**
0.230	-0.068	0.090	-0.191	0.090	0.582**	0.110	-0.094
0.400	-0.003	0.120	-0.088	0.120	-0.162	0.250	-0.204
0.490	0.032	0.200	-0.073	0.200	-0.068	0.400	-0.190
0.630	0.963**	0.260	-0.076	0.250	-0.158	0.490	-0.190
0.750	0.172	0.400	-0.048	0.400	-0.115	0.580	-0.140
0.850	0.215	0.490	-0.020	0.490	-0.034	0.650	0.096
0.900	0.270	0.580	0.047	0.580	-0.006	0.750	0.322
0.960	0.121	0.640	0.265	0.650	-0.049	0.830	0.453
		0.750	0.328	0.750	-0.020	0.900	0.498
		0.870	0.401	0.890	0.470	0.960	0.352
		0.930	0.304	0.930	0.374		
		0.960	0.189	0.960	-2.485**		
CN =	0.397		0.466		0.484		0.508

Table J-2. Continued.

Flight 224, Wing sweep = 26°, Time = 9-8-26-500, MINF = 0.855, Camber = 5/10, ALPT = 6.97, BETA = 0.22, QINF = 594.5, RNPU = 4.7E+06, CNWP = 0.4279

η = 0.93		0.76		0.59		0.40	
			Upper Surface				
x/c	CP	*x/c*	CP	*x/c*	CP	*x/c*	CP
0.020	0.198	0.000	0.752	0.000	3.136**	0.010	-0.535
0.060	-0.129	0.020	0.047	0.020	-0.054	0.020	-0.256
0.110	-0.354	0.040	-0.061	0.060	-3.438**	0.060	-0.680
0.200	-0.787	0.060	-0.267	0.090	-0.526	0.110	-0.841
0.230	-0.693	0.090	-0.354	0.110	-0.579	0.140	-1.011
0.400	-0.581	0.130	-0.528	0.130	-0.735	0.190	-1.954**
0.490	-0.442	0.150	-0.693	0.150	-0.811	0.250	-0.979
0.590	-0.293	0.200	-0.745	0.210	-0.818	0.400	-0.753
0.630	-0.281	0.250	-0.820	0.250	-0.853	0.490	-0.534
0.700	-0.295	0.260	-0.828	0.340	-0.906	0.580	-0.438
0.750	-0.885	0.280	-0.824	0.370	-0.909	0.650	-0.494
0.810	-0.832	0.290	-0.827	0.400	-0.886	0.700	-0.466
0.840	-0.889	0.310	-0.801	0.410	-0.740**	0.750	-0.524
0.900	-0.341	0.320	-0.806	0.430	-0.909	0.800	-0.793
0.960	-0.335	0.340	-0.812	0.440	-0.895	0.830	-0.537
		0.350	-0.383**	0.460	-0.735	0.900	-0.435
		0.370	-0.807	0.490	-0.870	0.960	-0.408
		0.380	-0.849	0.500	-0.911		
		0.400	-0.783	0.520	-0.898		
		0.410	-0.822	0.540	-0.892		
		0.430	-0.785	0.550	-0.842		
		0.440	-0.777	0.580	-0.749		
		0.460	-0.817	0.600	-0.640		
		0.470	-0.805	0.610	-0.553		
		0.490	-0.798	0.650	2.445**		
		0.500	-0.803	0.700	-0.576		
		0.520	-0.775	0.750	-0.516		
		0.530	-0.788	0.820	-0.465		
		0.550	-0.819	0.890	-0.289		
		0.560	-0.819	0.900	-0.314		
		0.580	-0.796	0.960	-0.278		
		0.590	-0.840				
		0.600	-0.813				
		0.640	-0.861				
		0.700	-0.846				
		0.750	-0.025**				
		0.820	-0.624				
		0.870	-0.304				
		0.930	-0.220				
		0.960	-0.219				
			Lower Surface				
0.020	-0.551	0.020	-0.381	0.020	-0.130	0.020	0.213
0.110	-0.146	0.060	-0.019	0.060	0.075	0.060	0.948**
0.230	0.013	0.090	-0.041	0.090	0.587**	0.110	0.059
0.400	0.007	0.120	-0.017	0.120	-0.024	0.250	-0.087
0.490	0.042	0.200	0.011	0.200	0.020	0.400	-0.106
0.630	0.970**	0.260	-0.013	0.250	-0.049	0.490	-0.111
0.750	0.182	0.400	-0.005	0.400	-0.044	0.580	-0.091
0.850	0.227	0.490	0.014	0.490	-0.015	0.650	0.134
0.900	0.290	0.580	0.066	0.580	0.025	0.750	0.359
0.960	0.123	0.640	0.295	0.650	-0.029	0.830	0.481
		0.750	0.350	0.750	-0.011	0.900	0.525
		0.870	0.465	0.890	0.497	0.960	0.369
		0.930	0.341	0.930	0.397		
		0.960	0.232	0.960	-2.500**		
CN =	0.549		0.760		0.680		0.737

Table J-2. Continued.

Flight 224, Wing sweep = 26°, Time = 9-8-31-000, MINF = 0.848, Camber = 5/10, ALPT = 8.00, BETA = 0.02, QINF = 583.5, RNPU = 4.6E+06, CNWP = 0.4797

η = 0.93		0.76		0.59		0.40	
			Upper Surface				
x/c	CP	*x/c*	CP	*x/c*	CP	*x/c*	CP
0.020	0.066	0.000	0.818	0.000	3.198**	0.010	-0.649
0.060	-0.230	0.020	-0.105	0.020	-0.212	0.020	-0.681
0.110	-0.412	0.040	-0.198	0.060	-2.031**	0.060	-0.755
0.200	-0.832	0.060	-0.404	0.090	-0.651	0.110	-0.935
0.230	-0.760	0.090	-0.496	0.110	-0.709	0.140	-1.092
0.400	-0.664	0.130	-0.612	0.130	-0.843	0.190	-1.988**
0.490	-0.556	0.150	-0.767	0.150	-0.897	0.250	-1.100
0.590	-0.394	0.200	-0.810	0.210	-0.921	0.400	-0.811
0.630	-0.313	0.250	-0.892	0.250	-0.929	0.490	-0.643
0.700	-0.323	0.260	-0.899	0.340	-0.974	0.580	-0.546
0.750	-0.879	0.280	-0.912	0.370	-0.984	0.650	-0.603
0.810	-0.831	0.290	-0.912	0.400	-0.988	0.700	-0.581
0.840	-0.888	0.310	-0.854	0.410	-0.751**	0.750	-0.613
0.900	-0.411	0.320	-0.894	0.430	-0.985	0.800	-0.641
0.960	-0.397	0.340	-0.897	0.440	-0.959	0.830	-0.507
		0.350	-0.393**	0.460	-0.746	0.900	-0.399
		0.370	-0.885	0.490	-0.931	0.960	-0.351
		0.380	-0.937	0.500	-0.989		
		0.400	-0.863	0.520	-0.990		
		0.410	-0.864	0.540	-0.976		
		0.430	-0.877	0.550	-0.949		
		0.440	-0.812	0.580	-0.923		
		0.460	-0.900	0.600	-0.946		
		0.470	-0.897	0.610	-0.913		
		0.490	-0.882	0.650	2.494**		
		0.500	-0.889	0.700	-0.729		
		0.520	-0.870	0.750	-0.651		
		0.530	-0.864	0.820	-0.336		
		0.550	-0.883	0.890	-0.259		
		0.560	-0.889	0.900	-0.259		
		0.580	-0.874	0.960	-0.241		
		0.590	-0.910				
		0.600	-0.894				
		0.640	-0.874				
		0.700	-0.898				
		0.750	-0.019**				
		0.820	-0.237				
		0.870	-0.210				
		0.930	-0.227				
		0.960	-0.228				
			Lower Surface				
0.020	-0.271	0.020	-0.164	0.020	0.007	0.020	0.334
0.110	-0.103	0.060	0.076	0.060	0.184	0.060	0.968**
0.230	0.058	0.090	0.041	0.090	0.601**	0.110	0.126
0.400	0.026	0.120	0.053	0.120	0.028	0.250	-0.032
0.490	0.043	0.200	0.055	0.200	0.063	0.400	-0.057
0.630	0.991**	0.260	0.034	0.250	0.007	0.490	-0.072
0.750	0.170	0.400	0.024	0.400	-0.007	0.580	-0.044
0.850	0.209	0.490	0.035	0.490	-0.009	0.650	0.160
0.900	0.278	0.580	0.078	0.580	0.047	0.750	0.379
0.960	0.111	0.640	0.300	0.650	-0.020	0.830	0.492
		0.750	0.347	0.750	-0.020	0.900	0.537
		0.870	0.443	0.890	0.501	0.960	0.368
		0.930	0.335	0.930	0.396		
		0.960	0.221	0.960	-2.545**		
CN =	0.618		0.802		0.784		0.844

Table J-2. Continued.

Flight 211, Wing sweep = 26°, Time = 11-53-1-500, MINF = 0.900, Camber = 0/2, ALPT = 3.52, BETA = 0.63, QINF = 601.5, RNPU = 4.6E+06, CNWP = 0.1955

η = 0.93		0.76		0.59		0.40	
			Upper Surface				
x/c	CP	*x/c*	CP	*x/c*	CP	*x/c*	CP
0.020	0.063	0.000	0.849	0.000	0.501**	0.010	-0.580
0.060	-0.114	0.020	-0.166	0.020	-0.171	0.020	-0.632
0.110	-0.222	0.040	-0.113	0.060	0.508**	0.060	-0.557
0.200	-0.252	0.060	-0.256	0.090	-0.462	0.110	-0.551
0.230	-0.359	0.090	-0.236	0.110	-0.404	0.140	-0.590
0.400	-0.098	0.130	-0.291	0.130	-1.763**	0.190	-1.763**
0.490	-0.139	0.150	-0.371	0.150	-0.398	0.250	-0.531
0.590	-0.215	0.200	-0.296	0.210	-0.417	0.400	-0.559
0.630	-0.238	0.250	-0.442	0.250	-0.493	0.490	-0.210
0.700	-0.352	0.260	-0.439	0.340	-0.567	0.580	-0.245
0.750	-0.185	0.280	-0.454	0.370	-0.518	0.650	-0.345
0.810	-0.163	0.290	-0.454	0.400	-0.441	0.700	-0.323
0.840	-0.166	0.310	-0.438	0.410	-0.727**	0.750	-0.410
0.900	-0.064	0.320	-0.452	0.430	-0.481	0.800	-0.564
0.960	0.049	0.340	-0.474	0.440	-0.347	0.830	-0.534
		0.350	-0.392**	0.460	-0.256	0.900	-0.137
		0.370	-0.478	0.490	-0.215	0.960	0.031
		0.380	-0.504	0.500	-0.251		
		0.400	-0.442	0.520	-0.235		
		0.410	-0.490	0.540	-0.232		
		0.430	-0.449	0.550	-0.221		
		0.440	-0.389	0.580	-0.218		
		0.460	-0.244	0.600	-0.233		
		0.470	-0.208	0.610	-0.249		
		0.490	-0.174	0.650	-0.518		
		0.500	-0.168	0.700	-0.435		
		0.520	-0.162	0.750	-0.412		
		0.530	-0.171	0.820	-0.542		
		0.550	-0.201	0.890	-0.061		
		0.560	-0.198	0.900	-0.017		
		0.580	-0.184	0.960	0.074		
		0.590	-0.215				
		0.600	-0.211				
		0.640	-0.430				
		0.700	-0.391				
		0.750	-0.088**				
		0.820	-0.354				
		0.870	-0.230				
		0.930	-0.080				
		0.960	-0.015				
			Lower Surface				
0.020	-0.849	0.020	-0.508	0.020	-0.345	0.020	0.291
0.110	-0.559	0.060	-0.157	0.060	-0.109	0.060	-0.084
0.230	-0.556	0.090	-0.229	0.090	-0.136	0.110	-0.099
0.400	-0.060	0.120	-0.314	0.120	-0.255	0.250	-0.426
0.490	-0.076	0.200	-0.592	0.200	-0.419	0.400	-0.296
0.630	1.328**	0.260	-0.463	0.250	-0.462	0.490	-0.446
0.750	0.051	0.400	-0.501	0.400	-0.401	0.580	-0.586
0.850	0.123	0.490	-0.544	0.490	-0.160	0.650	-0.462
0.900	0.216	0.580	-0.088	0.580	-0.606	0.750	-0.011
0.960	0.203	0.640	0.047	0.650	-0.094	0.830	0.121
		0.750	0.185	0.750	-0.087	0.900	0.270
		0.870	0.246	0.890	0.259	0.960	0.281
		0.930	0.240	0.930	0.253		
		0.960	0.196	0.960	0.343		
CN =	0.043		0.132		0.163		0.200

Table J-2. Continued.

Flight 211, Wing sweep = 26°, Time = 11-53-16-000, MINF = 0.897, Camber = 0/3, ALPT = 3.99, BETA = -0.04, QINF = 595.2, RNPU = 4.5E+06, CNWP = 0.2007

η = 0.93		0.76		0.59		0.40	
			Upper Surface				
x/c	CP	*x/c*	CP	*x/c*	CP	*x/c*	CP
0.020	0.032	0.000	0.837	0.000	0.510**	0.010	-0.613
0.060	-0.128	0.020	-0.202	0.020	-0.225	0.020	-0.679
0.110	-0.238	0.040	-0.156	0.060	0.502**	0.060	-0.590
0.200	-0.264	0.060	-0.309	0.090	-0.505	0.110	-0.602
0.230	-0.373	0.090	-0.251	0.110	-0.450	0.140	-0.628
0.400	-0.116	0.130	-0.302	0.130	-1.777**	0.190	-1.777**
0.490	-0.159	0.150	-0.389	0.150	-0.441	0.250	-0.553
0.590	-0.221	0.200	-0.308	0.210	-0.459	0.400	-0.585
0.630	-0.244	0.250	-0.468	0.250	-0.548	0.490	-0.246
0.700	-0.365	0.260	-0.461	0.340	-0.576	0.580	-0.243
0.750	-0.451	0.280	-0.468	0.370	-0.571	0.650	-0.337
0.810	-0.291	0.290	-0.472	0.400	-0.441	0.700	-0.323
0.840	-0.254	0.310	-0.461	0.410	-0.730**	0.750	-0.410
0.900	-0.076	0.320	-0.464	0.430	-0.497	0.800	-0.573
0.960	0.049	0.340	-0.492	0.440	-0.497	0.830	-0.535
		0.350	-0.400**	0.460	-0.388	0.900	-0.135
		0.370	-0.487	0.490	-0.202	0.960	0.023
		0.380	-0.510	0.500	-0.236		
		0.400	-0.449	0.520	-0.217		
		0.410	-0.508	0.540	-0.216		
		0.430	-0.478	0.550	-0.207		
		0.440	-0.449	0.580	-0.216		
		0.460	-0.261	0.600	-0.213		
		0.470	-0.190	0.610	-0.223		
		0.490	-0.163	0.650	-0.539		
		0.500	-0.158	0.700	-0.436		
		0.520	-0.164	0.750	-0.418		
		0.530	-0.164	0.820	-0.573		
		0.550	-0.208	0.890	-0.083		
		0.560	-0.196	0.900	-0.046		
		0.580	-0.175	0.960	0.047		
		0.590	-0.215				
		0.600	-0.214				
		0.640	-0.435				
		0.700	-0.396				
		0.750	-0.080**				
		0.820	-0.371				
		0.870	-0.302				
		0.930	-0.121				
		0.960	-0.055				
			Lower Surface				
0.020	-0.846	0.020	-0.391	0.020	-0.212	0.020	0.315
0.110	-0.556	0.060	-0.153	0.060	-0.079	0.060	-0.081
0.230	-0.560	0.090	-0.232	0.090	-0.127	0.110	-0.091
0.400	-0.070	0.120	-0.310	0.120	-0.245	0.250	-0.412
0.490	-0.080	0.200	-0.583	0.200	-0.390	0.400	-0.331
0.630	1.346**	0.260	-0.424	0.250	-0.430	0.490	-0.443
0.750	0.063	0.400	-0.462	0.400	-0.409	0.580	-0.573
0.850	0.126	0.490	-0.161	0.490	-0.150	0.650	-0.324
0.900	0.219	0.580	-0.105	0.580	-0.597	0.750	0.048
0.960	0.204	0.640	0.059	0.650	-0.091	0.830	0.186
		0.750	0.191	0.750	-0.084	0.900	0.289
		0.870	0.262	0.890	0.306	0.960	0.273
		0.930	0.234	0.930	0.267		
		0.960	0.198	0.960	0.339		
CN =	0.079		0.194		0.200		0.240

Table J-2. Continued.

Flight 211, Wing sweep = 26°, Time = 11-53-20-000, MINF = 0.898, Camber = 0/2, ALPT = 4.98, BETA = 0.57, QINF = 597.1, RNPU = 4.5E+06, CNWP = 0.2452

η = 0.93		0.76		0.59		0.40	
			Upper Surface				
x/c	CP	*x/c*	CP	*x/c*	CP	*x/c*	CP
0.020	-0.079	0.000	0.872	0.000	0.484**	0.010	-0.597
0.060	-0.293	0.020	-0.370	0.020	-0.359	0.020	-0.765
0.110	-0.302	0.040	-0.224	0.060	0.439**	0.060	-0.721
0.200	-0.371	0.060	-0.463	0.090	-0.605	0.110	-0.695
0.230	-0.379	0.090	-0.466	0.110	-0.595	0.140	-0.732
0.400	-0.475	0.130	-0.479	0.130	-1.771**	0.190	-1.771**
0.490	-0.386	0.150	-0.470	0.150	-0.548	0.250	-0.758
0.590	-0.216	0.200	-0.401	0.210	-0.567	0.400	-0.625
0.630	-0.200	0.250	-0.550	0.250	-0.610	0.490	-0.474
0.700	-0.175	0.260	-0.545	0.340	-0.672	0.580	-0.402
0.750	-0.228	0.280	-0.569	0.370	-0.679	0.650	-0.455
0.810	-0.218	0.290	-0.561	0.400	-0.655	0.700	-0.438
0.840	-0.215	0.310	-0.534	0.410	-0.728**	0.750	-0.492
0.900	-0.089	0.320	-0.541	0.430	-0.668	0.800	-0.648
0.960	0.029	0.340	-0.563	0.440	-0.658	0.830	-0.618
		0.350	-0.403**	0.460	-0.678	0.900	-0.078
		0.370	-0.575	0.490	-0.625	0.960	0.016
		0.380	-0.603	0.500	-0.624		
		0.400	-0.531	0.520	-0.570		
		0.410	-0.573	0.540	-0.564		
		0.430	-0.554	0.550	-0.546		
		0.440	-0.538	0.580	-0.539		
		0.460	-0.589	0.600	-0.527		
		0.470	-0.593	0.610	-0.507		
		0.490	-0.589	0.650	-0.618		
		0.500	-0.599	0.700	-0.519		
		0.520	-0.579	0.750	-0.488		
		0.530	-0.585	0.820	-0.415		
		0.550	-0.612	0.890	-0.035		
		0.560	-0.623	0.900	-0.001		
		0.580	-0.600	0.960	0.073		
		0.590	-0.641				
		0.600	-0.640				
		0.640	-0.651				
		0.700	-0.554				
		0.750	-0.088**				
		0.820	-0.161				
		0.870	-0.167				
		0.930	-0.026				
		0.960	0.037				
			Lower Surface				
0.020	-0.545	0.020	-0.328	0.020	-0.077	0.020	0.328
0.110	-0.491	0.060	-0.080	0.060	-0.007	0.060	-0.080
0.230	-0.483	0.090	-0.165	0.090	-0.056	0.110	-0.016
0.400	-0.104	0.120	-0.243	0.120	-0.195	0.250	-0.287
0.490	-0.098	0.200	-0.424	0.200	-0.284	0.400	-0.316
0.630	1.342**	0.260	-0.346	0.250	-0.364	0.490	-0.412
0.750	0.050	0.400	-0.406	0.400	-0.372	0.580	-0.508
0.850	0.109	0.490	-0.133	0.490	-0.149	0.650	-0.297
0.900	0.206	0.580	-0.149	0.580	-0.489	0.750	0.087
0.960	0.185	0.640	0.048	0.650	-0.087	0.830	0.238
		0.750	0.196	0.750	-0.083	0.900	0.308
		0.870	0.271	0.890	0.323	0.960	0.263
		0.930	0.256	0.930	0.278		
		0.960	0.218	0.960	0.357		
CN =	0.147		0.340		0.339		0.392

Table J-2. Continued.

Flight 211, Wing sweep = 26°, Time = 11-53-26-500, MINF = 0.897, Camber = 0/2, ALPT = 7.14, BETA = 0.28, QINF = 595.2, RNPU = 4.5E+06, CNWP = 0.3855

η = 0.93		0.76		0.59		0.40	
			Upper Surface				
x/c	CP	*x/c*	CP	*x/c*	CP	*x/c*	CP
0.020	-0.469	0.000	0.855	0.000	0.359**	0.010	-0.818
0.060	-0.545	0.020	-0.543	0.020	-0.682	0.020	-0.915
0.110	-0.565	0.040	-0.541	0.060	0.263**	0.060	-0.934
0.200	-0.589	0.060	-0.660	0.090	-0.785	0.110	-0.856
0.230	-0.497	0.090	-0.663	0.110	-0.781	0.140	-0.887
0.400	-0.587	0.130	-0.695	0.130	-1.777**	0.190	-1.777**
0.490	-0.522	0.150	-0.696	0.150	-0.736	0.250	-0.920
0.590	-0.538*	0.200	-0.608	0.210	-0.747	0.400	-0.725
0.630	-0.470	0.250	-0.726	0.250	-0.799	0.490	-0.649
0.700	-0.551	0.260	-0.713	0.340	-0.841	0.580	-0.524
0.750	-0.152	0.280	-0.749	0.370	-0.839	0.650	-0.572
0.810	-0.157	0.290	-0.752	0.400	-0.817	0.700	-0.561
0.840	-0.163	0.310	-0.719	0.410	-0.730**	0.750	-0.607
0.900	-0.119	0.320	-0.733	0.430	-0.859	0.800	-0.745
0.960	-0.014	0.340	-0.751	0.440	-0.832	0.830	-0.740
		0.350	-0.408**	0.460	-0.821	0.900	-0.165
		0.370	-0.748	0.490	-0.775	0.960	-0.123
		0.380	-0.793	0.500	-0.851		
		0.400	-0.727	0.520	-0.844		
		0.410	-0.770	0.540	-0.847		
		0.430	-0.742	0.550	-0.826		
		0.440	-0.713	0.580	-0.823		
		0.460	-0.771	0.600	-0.820		
		0.470	-0.765	0.610	-0.814		
		0.490	-0.754	0.650	-0.846		
		0.500	-0.766	0.700	-0.724		
		0.520	-0.750	0.750	-0.720		
		0.530	-0.746	0.820	-0.267		
		0.550	-0.774	0.890	-0.110		
		0.560	-0.784	0.900	-0.094		
		0.580	-0.760	0.960	-0.053		
		0.590	-0.807				
		0.600	-0.789				
		0.640	-0.823				
		0.700	-0.741				
		0.750	-0.089**				
		0.820	-0.154				
		0.870	-0.114				
		0.930	-0.080				
		0.960	-0.057				
			Lower Surface				
0.020	-0.150	0.020	0.021	0.020	0.150	0.020	0.513
0.110	-0.333	0.060	0.069	0.060	0.145	0.060	-0.096
0.230	-0.224	0.090	-0.031	0.090	0.072	0.110	0.136
0.400	-0.131	0.120	-0.112	0.120	-0.075	0.250	-0.172
0.490	-0.121	0.200	-0.106	0.200	-0.129	0.400	-0.215
0.630	1.346**	0.260	-0.257	0.250	-0.201	0.490	-0.327
0.750	0.002	0.400	-0.263	0.400	-0.259	0.580	-0.444
0.850	0.059	0.490	-0.197	0.490	-0.132	0.650	-0.238
0.900	0.169	0.580	-0.191	0.580	-0.245	0.750	0.111
0.960	0.146	0.640	0.039	0.650	-0.099	0.830	0.260
		0.750	0.176	0.750	-0.099	0.900	0.309
		0.870	0.234	0.890	0.313	0.960	0.232
		0.930	0.209	0.930	0.241		
		0.960	0.152	0.960	0.299		
CN =	0.319		0.529		0.567		0.587

Table J-2. Continued.

Flight 211, Wing sweep = 26°, Time = 11-53-30-500, MINF = 0.897, Camber = 0/2, ALPT = 8.10, BETA = 0.19, QINF = 600.0, RNPU = 4.6E+06, CNWP = 0.4332

η = 0.93		0.76		0.59		0.40	
			Upper Surface				
x/c	CP	*x/c*	CP	*x/c*	CP	*x/c*	CP
0.020	-0.590	0.000	0.830	0.000	0.292**	0.010	-0.879
0.060	-0.627	0.020	-0.735	0.020	-0.765	0.020	-1.009
0.110	-0.655	0.040	-0.586	0.060	0.178**	0.060	-0.998
0.200	-0.689	0.060	-0.729	0.090	-0.855	0.110	-0.945
0.230	-0.555	0.090	-0.754	0.110	-0.856	0.140	-0.966
0.400	-0.647	0.130	-0.765	0.130	-1.775**	0.190	-1.775**
0.490	-0.584	0.150	-0.777	0.150	-0.811	0.250	-1.007
0.590	-0.588	0.200	-0.708	0.210	-0.829	0.400	-0.764
0.630	-0.533	0.250	-0.780	0.250	-0.854	0.490	-0.662
0.700	-0.624	0.260	-0.769	0.340	-0.907	0.580	-0.585
0.750	-0.125	0.280	-0.808	0.370	-0.904	0.650	-0.628
0.810	-0.128	0.290	-0.808	0.400	-0.882	0.700	-0.599
0.840	-0.133	0.310	-0.780	0.410	-0.736**	0.750	-0.639
0.900	-0.136	0.320	-0.786	0.430	-0.918	0.800	-0.751
0.960	-0.033	0.340	-0.813	0.440	-0.900	0.830	-0.767
		0.350	-0.418**	0.460	-0.827	0.900	-0.210
		0.370	-0.805	0.490	-0.846	0.960	-0.160
		0.380	-0.854	0.500	-0.917		
		0.400	-0.789	0.520	-0.910		
		0.410	-0.838	0.540	-0.920		
		0.430	-0.814	0.550	-0.890		
		0.440	-0.789	0.580	-0.875		
		0.460	-0.846	0.600	-0.883		
		0.470	-0.841	0.610	-0.866		
		0.490	-0.824	0.650	-1.033		
		0.500	-0.828	0.700	-0.910		
		0.520	-0.819	0.750	-0.830		
		0.530	-0.808	0.820	-0.249		
		0.550	-0.842	0.890	-0.162		
		0.560	-0.846	0.900	-0.154		
		0.580	-0.822	0.960	-0.099		
		0.590	-0.861				
		0.600	-0.851				
		0.640	-0.380				
		0.700	-0.303				
		0.750	-0.087**				
		0.820	-0.199				
		0.870	-0.185				
		0.930	-0.173				
		0.960	-0.158				
			Lower Surface				
0.020	-0.071	0.020	0.136	0.020	0.237	0.020	0.633
0.110	-0.245	0.060	0.146	0.060	0.203	0.060	-0.092
0.230	-0.190	0.090	0.035	0.090	0.127	0.110	0.199
0.400	-0.146	0.120	-0.054	0.120	-0.025	0.250	-0.120
0.490	-0.144	0.200	-0.068	0.200	-0.021	0.400	-0.178
0.630	1.324**	0.260	-0.205	0.250	-0.149	0.490	-0.280
0.750	-0.030	0.400	-0.243	0.400	-0.210	0.580	-0.398
0.850	0.030	0.490	-0.204	0.490	-0.113	0.650	-0.267
0.900	0.139	0.580	-0.217	0.580	-0.361	0.750	0.117
0.960	0.132	0.640	0.011	0.650	-0.092	0.830	0.261
		0.750	0.148	0.750	-0.110	0.900	0.309
		0.870	0.205	0.890	0.291	0.960	0.226
		0.930	0.159	0.930	0.220		
		0.960	0.100	0.960	0.276		
CN =	0.365		0.533		0.647		0.662

Table J-2. Continued.

Flight 211, Wing sweep = 26°, Time = 11-53-32-000, MINF = 0.902, Camber = 0/2, ALPT = 8.11, BETA = 1.18, QINF = 610.3, RNPU = 4.6E+06, CNWP = 0.4627

η = 0.93		0.76		0.59		0.40	
			Upper Surface				
x/c	CP	*x/c*	CP	*x/c*	CP	*x/c*	CP
0.020	-0.600	0.000	0.847	0.000	0.303**	0.010	-0.885
0.060	-0.637	0.020	-0.737	0.020	-0.765	0.020	-1.007
0.110	-0.677	0.040	-0.597	0.060	0.147**	0.060	-0.985
0.200	-0.707	0.060	-0.729	0.090	-0.860	0.110	-0.962
0.230	-0.596	0.090	-0.759	0.110	-0.864	0.140	-0.981
0.400	-0.656	0.130	-0.776	0.130	-1.757**	0.190	-1.757**
0.490	-0.604	0.150	-0.784	0.150	-0.819	0.250	-1.020
0.590	-0.602	0.200	-0.718	0.210	-0.826	0.400	-0.780
0.630	-0.549	0.250	-0.790	0.250	-0.865	0.490	-0.674
0.700	-0.638	0.260	-0.777	0.340	-0.911	0.580	-0.611
0.750	-0.118	0.280	-0.812	0.370	-0.913	0.650	-0.630
0.810	-0.108	0.290	-0.821	0.400	-0.889	0.700	-0.616
0.840	-0.106	0.310	-0.790	0.410	-0.735**	0.750	-0.644
0.900	-0.123	0.320	-0.797	0.430	-0.922	0.800	-0.753
0.960	-0.033	0.340	-0.812	0.440	-0.904	0.830	-0.768
		0.350	-0.415**	0.460	-0.825	0.900	-0.238
		0.370	-0.813	0.490	-0.869	0.960	-0.197
		0.380	-0.860	0.500	-0.920		
		0.400	-0.792	0.520	-0.916		
		0.410	-0.842	0.540	-0.915		
		0.430	-0.817	0.550	-0.898		
		0.440	-0.794	0.580	-0.898		
		0.460	-0.859	0.600	-0.899		
		0.470	-0.841	0.610	-0.889		
		0.490	-0.833	0.650	-1.055		
		0.500	-0.845	0.700	-0.937		
		0.520	-0.821	0.750	-0.938		
		0.530	-0.818	0.820	-0.312		
		0.550	-0.851	0.890	-0.207		
		0.560	-0.858	0.900	-0.221		
		0.580	-0.832	0.960	-0.163		
		0.590	-0.876				
		0.600	-0.858				
		0.640	-0.346				
		0.700	-0.288				
		0.750	-0.094**				
		0.820	-0.221				
		0.870	-0.237				
		0.930	-0.218				
		0.960	-0.198				
			Lower Surface				
0.020	-0.005	0.020	0.173	0.020	0.267	0.020	0.652
0.110	-0.226	0.060	0.165	0.060	0.231	0.060	-0.102
0.230	-0.217	0.090	0.053	0.090	0.146	0.110	0.220
0.400	-0.161	0.120	-0.036	0.120	-0.004	0.250	-0.102
0.490	-0.168	0.200	-0.057	0.200	0.001	0.400	-0.162
0.630	1.289**	0.260	-0.199	0.250	-0.130	0.490	-0.273
0.750	-0.066	0.400	-0.249	0.400	-0.197	0.580	-0.386
0.850	0.002	0.490	-0.293	0.490	-0.123	0.650	-0.604
0.900	0.115	0.580	-0.261	0.580	-0.417	0.750	0.110
0.960	0.121	0.640	-0.022	0.650	-0.098	0.830	0.258
		0.750	0.125	0.750	-0.120	0.900	0.305
		0.870	0.183	0.890	0.269	0.960	0.217
		0.930	0.139	0.930	0.197		
		0.960	0.073	0.960	0.247		
CN =	0.357		0.526		0.670		0.651

Table J-2. Continued.

Flight 211, Wing sweep = 26°, Time = 11-48-2-000, MINF = 0.901, Camber = 10/2, ALPT = 4.04, BETA = 0.63, QINF = 599.9, RNPU = 4.6E+06, CNWP = 0.2434

η = 0.93		0.76		0.59		0.40	
			Upper Surface				
x/c	CP	*x/c*	CP	*x/c*	CP	*x/c*	CP
0.020	0.626	0.000	0.148	0.000	0.272**	0.010	0.473
0.060	0.175	0.020	0.585	0.020	0.655	0.020	0.329
0.110	-0.120	0.040	0.465	0.060	0.971**	0.060	-0.167
0.200	-0.842	0.060	0.109	0.090	-0.116	0.110	-0.470
0.230	-0.746	0.090	-0.092	0.110	-0.330	0.140	-0.866
0.400	-0.623	0.130	-0.327	0.130	-1.759**	0.190	-1.759**
0.490	-0.494	0.150	-0.611	0.150	-0.750	0.250	-0.680
0.590	-0.078	0.200	-0.683	0.210	-0.744	0.400	-0.609
0.630	-0.107	0.250	-0.723	0.250	-0.728	0.490	-0.325
0.700	-0.108	0.260	-0.691	0.340	-0.718	0.580	-0.315
0.750	-0.184	0.280	-0.697	0.370	-0.718	0.650	-0.368
0.810	-0.184	0.290	-0.684	0.400	-0.699	0.700	-0.349
0.840	-0.177	0.310	-0.647	0.410	-0.549**	0.750	-0.432
0.900	-0.077	0.320	-0.657	0.430	-0.691	0.800	-0.611
0.960	0.032	0.340	-0.659	0.440	-0.674	0.830	-0.569
		0.350	-0.479**	0.460	-0.686	0.900	-0.171
		0.370	-0.652	0.490	-0.558	0.960	-0.022
		0.380	-0.685	0.500	-0.498		
		0.400	-0.609	0.520	-0.360		
		0.410	-0.650	0.540	-0.314		
		0.430	-0.624	0.550	-0.277		
		0.440	-0.585	0.580	-0.260		
		0.460	-0.661	0.600	-0.264		
		0.470	-0.652	0.610	-0.280		
		0.490	-0.638	0.650	-0.551		
		0.500	-0.638	0.700	-0.454		
		0.520	-0.623	0.750	-0.451		
		0.530	-0.614	0.820	-0.590		
		0.550	-0.644	0.890	-0.040		
		0.560	-0.636	0.900	0.002		
		0.580	-0.624	0.960	0.074		
		0.590	-0.652				
		0.600	-0.619				
		0.640	-0.492				
		0.700	-0.433				
		0.750	-0.091**				
		0.820	-0.151				
		0.870	-0.147				
		0.930	-0.020				
		0.960	0.039				
			Lower Surface				
0.020	-0.865	0.020	-0.976	0.020	-1.376	0.020	-0.774
0.110	-0.758	0.060	-1.047	0.060	-0.937	0.060	-0.091
0.230	-0.409	0.090	-0.832	0.090	-0.684	0.110	-0.384
0.400	-0.246	0.120	-0.936	0.120	-0.561	0.250	-0.361
0.490	-0.135	0.200	-0.291	0.200	-0.256	0.400	-0.368
0.630	1.139**	0.260	-0.291	0.250	-0.282	0.490	-0.421
0.750	0.024	0.400	-0.287	0.400	-0.362	0.580	-0.529
0.850	0.074	0.490	-0.185	0.490	-0.156	0.650	-0.763
0.900	0.127	0.580	-0.137	0.580	-0.559	0.750	0.023
0.960	0.139	0.640	0.037	0.650	-0.101	0.830	0.187
		0.750	0.175	0.750	-0.094	0.900	0.282
		0.870	0.232	0.890	0.271	0.960	0.261
		0.930	0.233	0.930	0.240		
		0.960	0.201	0.960	0.334		
CN =	0.108		0.207		0.204		0.184

Table J-2. Continued.

Flight 211, Wing sweep = 26°, Time = 11-48-23-500, MINF = 0.892, Camber = 10/2, ALPT = 5.96, BETA = 0.34, QINF = 588.0, RNPU = 4.5E+06, CNWP = 0.3356

η = 0.93		0.76		0.59		0.40	
			Upper Surface				
x/c	CP	*x/c*	CP	*x/c*	CP	*x/c*	CP
0.020	0.562	0.000	0.291	0.000	0.295**	0.010	0.317
0.060	0.113	0.020	0.504	0.020	0.548	0.020	0.160
0.110	-0.219	0.040	0.377	0.060	0.833**	0.060	-0.363
0.200	-0.923	0.060	0.006	0.090	-0.226	0.110	-0.658
0.230	-0.832	0.090	-0.182	0.110	-0.438	0.140	-0.984
0.400	-0.706	0.130	-0.433	0.130	-1.796**	0.190	-1.796**
0.490	-0.544	0.150	-0.704	0.150	-0.846	0.250	-0.965
0.590	-0.534	0.200	-0.777	0.210	-0.859	0.400	-0.691
0.630	-0.301	0.250	-0.846	0.250	-0.864	0.490	-0.584
0.700	-0.129	0.260	-0.807	0.340	-0.864	0.580	-0.454
0.750	-0.156	0.280	-0.829	0.370	-0.855	0.650	-0.501
0.810	-0.163	0.290	-0.826	0.400	-0.835	0.700	-0.476
0.840	-0.151	0.310	-0.774	0.410	-0.561**	0.750	-0.534
0.900	-0.089	0.320	-0.792	0.430	-0.875	0.800	-0.698
0.960	0.004	0.340	-0.792	0.440	-0.840	0.830	-0.664
		0.350	-0.438**	0.460	-0.806	0.900	-0.135
		0.370	-0.779	0.490	-0.802	0.960	-0.073
		0.380	-0.831	0.500	-0.870		
		0.400	-0.764	0.520	-0.852		
		0.410	-0.804	0.540	-0.854		
		0.430	-0.776	0.550	-0.832		
		0.440	-0.742	0.580	-0.814		
		0.460	-0.805	0.600	-0.794		
		0.470	-0.786	0.610	-0.738		
		0.490	-0.773	0.650	-0.733		
		0.500	-0.787	0.700	-0.604		
		0.520	-0.761	0.750	-0.572		
		0.530	-0.769	0.820	-0.445		
		0.550	-0.796	0.890	-0.060		
		0.560	-0.802	0.900	-0.020		
		0.580	-0.772	0.960	0.038		
		0.590	-0.814				
		0.600	-0.805				
		0.640	-0.841				
		0.700	-0.872				
		0.750	-0.081**				
		0.820	-0.161				
		0.870	-0.086				
		0.930	-0.014				
		0.960	0.020				
			Lower Surface				
0.020	-0.757	0.020	-1.011	0.020	-0.942	0.020	-0.518
0.110	-0.542	0.060	-1.002	0.060	-0.519	0.060	-0.079
0.230	-0.151	0.090	-0.459	0.090	-0.303	0.110	-0.171
0.400	-0.088	0.120	-0.133	0.120	-0.228	0.250	-0.170
0.490	-0.059	0.200	-0.110	0.200	-0.119	0.400	-0.244
0.630	1.161**	0.260	-0.124	0.250	-0.141	0.490	-0.354
0.750	0.030	0.400	-0.167	0.400	-0.277	0.580	-0.480
0.850	0.085	0.490	-0.160	0.490	-0.112	0.650	-0.177
0.900	0.177	0.580	-0.134	0.580	-0.234	0.750	0.098
0.960	0.167	0.640	0.059	0.650	-0.089	0.830	0.248
		0.750	0.163	0.750	-0.089	0.900	0.302
		0.870	0.220	0.890	0.294	0.960	0.229
		0.930	0.211	0.930	0.236		
		0.960	0.179	0.960	0.329		
CN =	0.295		0.437		0.465		0.460

Table J-2. Continued.

Flight 211, Wing sweep = 26°, Time = 11-48-28-000, MINF = 0.895, Camber = 10/2, ALPT = 7.01, BETA = 0.25, QINF = 590.4, RNPU = 4.5E+06, CNWP = 0.3709

η = 0.93		0.76		0.59		0.40	
			Upper Surface				
x/c	CP	*x/c*	CP	*x/c*	CP	*x/c*	CP
0.020	0.532	0.000	0.326	0.000	0.287**	0.010	0.233
0.060	0.071	0.020	0.439	0.020	0.505	0.020	0.108
0.110	-0.251	0.040	0.344	0.060	0.771**	0.060	-0.429
0.200	-0.935	0.060	-0.021	0.090	-0.264	0.110	-0.719
0.230	-0.857	0.090	-0.212	0.110	-0.460	0.140	-1.025
0.400	-0.738	0.130	-0.457	0.130	-1.785**	0.190	-1.785**
0.490	-0.590	0.150	-0.722	0.150	-0.864	0.250	-0.987
0.590	-0.578	0.200	-0.801	0.210	-0.880	0.400	-0.709
0.630	-0.493	0.250	-0.871	0.250	-0.887	0.490	-0.633
0.700	-0.142	0.260	-0.831	0.340	-0.895	0.580	-0.509
0.750	-0.145	0.280	-0.863	0.370	-0.895	0.650	-0.542
0.810	-0.155	0.290	-0.854	0.400	-0.869	0.700	-0.523
0.840	-0.151	0.310	-0.810	0.410	-0.555**	0.750	-0.572
0.900	-0.099	0.320	-0.823	0.430	-0.910	0.800	-0.716
0.960	-0.007	0.340	-0.828	0.440	-0.887	0.830	-0.690
		0.350	-0.445**	0.460	-0.799	0.900	-0.170
		0.370	-0.814	0.490	-0.852	0.960	-0.118
		0.380	-0.865	0.500	-0.904		
		0.400	-0.785	0.520	-0.896		
		0.410	-0.844	0.540	-0.895		
		0.430	-0.810	0.550	-0.868		
		0.440	-0.784	0.580	-0.855		
		0.460	-0.854	0.600	-0.855		
		0.470	-0.833	0.610	-0.838		
		0.490	-0.818	0.650	-0.866		
		0.500	-0.822	0.700	-0.758		
		0.520	-0.808	0.750	-0.719		
		0.530	-0.796	0.820	-0.323		
		0.550	-0.826	0.890	-0.100		
		0.560	-0.839	0.900	-0.072		
		0.580	-0.813	0.960	-0.025		
		0.590	-0.846				
		0.600	-0.843				
		0.640	-0.827				
		0.700	-0.385				
		0.750	-0.079**				
		0.820	-0.214				
		0.870	-0.169				
		0.930	-0.143				
		0.960	-0.129				
			Lower Surface				
0.020	-0.738	0.020	-0.716	0.020	-0.854	0.020	-0.405
0.110	-0.527	0.060	-0.494	0.060	-0.390	0.060	-0.067
0.230	-0.114	0.090	-0.452	0.090	-0.166	0.110	-0.095
0.400	-0.067	0.120	-0.302	0.120	-0.144	0.250	-0.129
0.490	-0.051	0.200	-0.100	0.200	-0.119	0.400	-0.214
0.630	1.160**	0.260	-0.138	0.250	-0.114	0.490	-0.338
0.750	0.014	0.400	-0.136	0.400	-0.252	0.580	-0.448
0.850	0.068	0.490	-0.153	0.490	-0.119	0.650	-0.199
0.900	0.171	0.580	-0.149	0.580	-0.248	0.750	0.106
0.960	0.167	0.640	0.034	0.650	-0.085	0.830	0.255
		0.750	0.141	0.750	-0.070	0.900	0.307
		0.870	0.192	0.890	0.282	0.960	0.229
		0.930	0.164	0.930	0.227		
		0.960	0.118	0.960	0.310		
CN =	0.333		0.446		0.526		0.519

Table J-2. Continued.

Flight 211, Wing sweep = 26°, Time = 11-48-29-000, MINF = 0.897, Camber = 10/2, ALPT = 7.02, BETA = 0.34, QINF = 592.9, RNPU = 4.5E+06, CNWP = 0.3783

η = 0.93		0.76		0.59		0.40	
			Upper Surface				
x/c	CP	*x/c*	CP	*x/c*	CP	*x/c*	CP
0.020	0.534	0.000	0.344	0.000	0.279**	0.010	0.237
0.060	0.081	0.020	0.495	0.020	0.507	0.020	0.103
0.110	-0.238	0.040	0.339	0.060	0.764**	0.060	-0.437
0.200	-0.924	0.060	-0.021	0.090	-0.265	0.110	-0.721
0.230	-0.877	0.090	-0.210	0.110	-0.458	0.140	-1.020
0.400	-0.734	0.130	-0.455	0.130	-1.777**	0.190	-1.777**
0.490	-0.603	0.150	-0.717	0.150	-0.860	0.250	-0.982
0.590	-0.585	0.200	-0.797	0.210	-0.873	0.400	-0.709
0.630	-0.506	0.250	-0.861	0.250	-0.881	0.490	-0.630
0.700	-0.155	0.260	-0.830	0.340	-0.891	0.580	-0.501
0.750	-0.123	0.280	-0.863	0.370	-0.895	0.650	-0.539
0.810	-0.129	0.290	-0.854	0.400	-0.869	0.700	-0.521
0.840	-0.125	0.310	-0.809	0.410	-0.552**	0.750	-0.573
0.900	-0.090	0.320	-0.824	0.430	-0.901	0.800	-0.713
0.960	0.004	0.340	-0.828	0.440	-0.888	0.830	-0.686
		0.350	-0.440**	0.460	-0.795	0.900	-0.171
		0.370	-0.812	0.490	-0.840	0.960	-0.121
		0.380	-0.861	0.500	-0.907		
		0.400	-0.787	0.520	-0.892		
		0.410	-0.840	0.540	-0.891		
		0.430	-0.820	0.550	-0.870		
		0.440	-0.785	0.580	-0.856		
		0.460	-0.856	0.600	-0.857		
		0.470	-0.832	0.610	-0.830		
		0.490	-0.827	0.650	-0.866		
		0.500	-0.821	0.700	-0.771		
		0.520	-0.809	0.750	-0.734		
		0.530	-0.799	0.820	-0.323		
		0.550	-0.827	0.890	-0.099		
		0.560	-0.835	0.900	-0.074		
		0.580	-0.813	0.960	-0.023		
		0.590	-0.851				
		0.600	-0.842				
		0.640	-0.813				
		0.700	-0.374				
		0.750	-0.078**				
		0.820	-0.222				
		0.870	-0.181				
		0.930	-0.142				
		0.960	-0.126				
			Lower Surface				
0.020	-0.818	0.020	-0.699	0.020	-0.835	0.020	-0.390
0.110	-0.507	0.060	-0.484	0.060	-0.369	0.060	-0.074
0.230	-0.090	0.090	-0.432	0.090	-0.143	0.110	-0.079
0.400	-0.059	0.120	-0.289	0.120	-0.126	0.250	-0.122
0.490	-0.075	0.200	-0.096	0.200	-0.111	0.400	-0.205
0.630	1.156**	0.260	-0.126	0.250	-0.108	0.490	-0.332
0.750	0.009	0.400	-0.141	0.400	-0.246	0.580	-0.446
0.850	0.060	0.490	-0.156	0.490	-0.118	0.650	-0.262
0.900	0.164	0.580	-0.165	0.580	-0.250	0.750	0.106
0.960	0.158	0.640	0.025	0.650	-0.084	0.830	0.258
		0.750	0.137	0.750	-0.077	0.900	0.310
		0.870	0.182	0.890	0.277	0.960	0.231
		0.930	0.158	0.930	0.223		
		0.960	0.111	0.960	0.311		
CN =	0.332		0.442		0.529		0.517

Table J-2. Continued.

Flight 211, Wing sweep = 26°, Time = 11-48-36-000, MINF = 0.902, Camber = 10/2, ALPT = 7.92, BETA = 0.40, QINF = 606.0, RNPU = 4.6E+06, CNWP = 0.4400

η = 0.93		0.76		0.59		0.40	
			Upper Surface				
x/c	CP	*x/c*	CP	*x/c*	CP	*x/c*	CP
0.020	0.495	0.000	0.425	0.000	0.289**	0.010	0.151
0.060	0.035	0.020	0.422	0.020	0.437	0.020	0.029
0.110	-0.277	0.040	0.289	0.060	0.682**	0.060	-0.485
0.200	-0.948	0.060	-0.067	0.090	-0.301	0.110	-0.803
0.230	-0.910	0.090	-0.243	0.110	-0.508	0.140	-1.071
0.400	-0.767	0.130	-0.493	0.130	-1.754**	0.190	-1.754**
0.490	-0.652	0.150	-0.745	0.150	-0.886	0.250	-1.062
0.590	-0.630	0.200	-0.823	0.210	-0.909	0.400	-0.764
0.630	-0.573	0.250	-0.902	0.250	-0.920	0.490	-0.641
0.700	-0.459	0.260	-0.871	0.340	-0.939	0.580	-0.573
0.750	-0.159	0.280	-0.899	0.370	-0.942	0.650	-0.593
0.810	-0.149	0.290	-0.899	0.400	-0.917	0.700	-0.576
0.840	-0.147	0.310	-0.857	0.410	-0.556**	0.750	-0.615
0.900	-0.140	0.320	-0.870	0.430	-0.964	0.800	-0.737
0.960	-0.045	0.340	-0.862	0.440	-0.938	0.830	-0.728
		0.350	-0.454**	0.460	-0.794	0.900	-0.265
		0.370	-0.856	0.490	-0.897	0.960	-0.198
		0.380	-0.908	0.500	-0.950		
		0.400	-0.840	0.520	-0.947		
		0.410	-0.885	0.540	-0.948		
		0.430	-0.862	0.550	-0.928		
		0.440	-0.834	0.580	-0.922		
		0.460	-0.900	0.600	-0.926		
		0.470	-0.884	0.610	-0.908		
		0.490	-0.871	0.650	-1.074		
		0.500	-0.878	0.700	-0.955		
		0.520	-0.864	0.750	-0.964		
		0.530	-0.853	0.820	-0.319		
		0.550	-0.878	0.890	-0.208		
		0.560	-0.882	0.900	-0.201		
		0.580	-0.860	0.960	-0.144		
		0.590	-0.891				
		0.600	-0.883				
		0.640	-0.394				
		0.700	-0.311				
		0.750	-0.099**				
		0.820	-0.235				
		0.870	-0.220				
		0.930	-0.224				
		0.960	-0.231				
			Lower Surface				
0.020	-0.789	0.020	-0.574	0.020	-0.617	0.020	-0.181
0.110	-0.453	0.060	-0.363	0.060	-0.125	0.060	-0.088
0.230	-0.091	0.090	-0.288	0.090	0.013	0.110	0.003
0.400	-0.077	0.120	-0.133	0.120	-0.065	0.250	-0.074
0.490	-0.120	0.200	-0.089	0.200	-0.098	0.400	-0.169
0.630	1.115**	0.260	-0.068	0.250	-0.070	0.490	-0.293
0.750	-0.055	0.400	-0.159	0.400	-0.202	0.580	-0.412
0.850	0.003	0.490	-0.183	0.490	-0.127	0.650	-0.570
0.900	0.111	0.580	-0.204	0.580	-0.415	0.750	0.103
0.960	0.106	0.640	-0.004	0.650	-0.098	0.830	0.250
		0.750	0.114	0.750	-0.084	0.900	0.309
		0.870	0.154	0.890	0.263	0.960	0.217
		0.930	0.110	0.930	0.195		
		0.960	0.042	0.960	0.287		
CN =	0.362		0.457		0.615		0.570

Table J-2. Continued.

Flight 211, Wing sweep = 26°, Time = 11-48-38-500, MINF = 0.905, Camber = 10/2, ALPT = 8.01, BETA = 0.40, QINF = 613.1, RNPU = 4.6E+06, CNWP = 0.4479

η = 0.93		0.76		0.59		0.40	
			Upper Surface				
x/c	CP	*x/c*	CP	*x/c*	CP	*x/c*	CP
0.020	0.497	0.000	0.428	0.000	0.274**	0.010	0.148
0.060	0.035	0.020	0.422	0.020	0.424	0.020	0.024
0.110	-0.266	0.040	0.285	0.060	0.631**	0.060	-0.514
0.200	-0.945	0.060	-0.070	0.090	-0.304	0.110	-0.798
0.230	-0.904	0.090	-0.244	0.110	-0.502	0.140	-1.058
0.400	-0.766	0.130	-0.489	0.130	-1.745**	0.190	-1.745**
0.490	-0.658	0.150	-0.742	0.150	-0.880	0.250	-1.076
0.590	-0.642	0.200	-0.818	0.210	-0.903	0.400	-0.766
0.630	-0.578	0.250	-0.902	0.250	-0.917	0.490	-0.643
0.700	-0.624	0.260	-0.869	0.340	-0.940	0.580	-0.581
0.750	-0.152	0.280	-0.897	0.370	-0.939	0.650	-0.601
0.810	-0.141	0.290	-0.901	0.400	-0.918	0.700	-0.579
0.840	-0.135	0.310	-0.854	0.410	-0.561**	0.750	-0.613
0.900	-0.144	0.320	-0.866	0.430	-0.958	0.800	-0.729
0.960	-0.050	0.340	-0.867	0.440	-0.939	0.830	-0.724
		0.350	-0.456**	0.460	-0.796	0.900	-0.289
		0.370	-0.855	0.490	-0.895	0.960	-0.216
		0.380	-0.908	0.500	-0.957		
		0.400	-0.840	0.520	-0.940		
		0.410	-0.882	0.540	-0.948		
		0.430	-0.856	0.550	-0.927		
		0.440	-0.831	0.580	-0.924		
		0.460	-0.900	0.600	-0.928		
		0.470	-0.881	0.610	-0.902		
		0.490	-0.869	0.650	-1.060		
		0.500	-0.877	0.700	-0.967		
		0.520	-0.858	0.750	-0.974		
		0.530	-0.854	0.820	-0.349		
		0.550	-0.881	0.890	-0.216		
		0.560	-0.882	0.900	-0.226		
		0.580	-0.861	0.960	-0.160		
		0.590	-0.897				
		0.600	-0.877				
		0.640	-0.442				
		0.700	-0.346				
		0.750	-0.106**				
		0.820	-0.255				
		0.870	-0.247				
		0.930	-0.235				
		0.960	-0.227				
			Lower Surface				
0.020	-0.749	0.020	-0.555	0.020	-0.598	0.020	-0.140
0.110	-0.442	0.060	-0.346	0.060	-0.096	0.060	-0.091
0.230	-0.090	0.090	-0.269	0.090	0.026	0.110	0.018
0.400	-0.073	0.120	-0.109	0.120	-0.053	0.250	-0.066
0.490	-0.131	0.200	-0.089	0.200	-0.104	0.400	-0.161
0.630	1.091**	0.260	-0.064	0.250	-0.065	0.490	-0.290
0.750	-0.058	0.400	-0.163	0.400	-0.194	0.580	-0.407
0.850	-0.003	0.490	-0.186	0.490	-0.132	0.650	-0.626
0.900	0.110	0.580	-0.209	0.580	-0.418	0.750	0.102
0.960	0.103	0.640	-0.005	0.650	-0.108	0.830	0.251
		0.750	0.105	0.750	-0.094	0.900	0.303
		0.870	0.152	0.890	0.263	0.960	0.217
		0.930	0.104	0.930	0.192		
		0.960	0.037	0.960	0.262		
CN =	0.370		0.465		0.618		0.574

Table J-2. Continued.

Flight 211, Wing sweep = 26°, Time = 11-48-46-000, MINF = 0.908, Camber = 10/2, ALPT = 9.13, BETA = 0.19, QINF = 634.3, RNPU = 4.8E+06, CNWP = 0.4844

η = 0.93		0.76		0.59		0.40	
			Upper Surface				
x/c	CP	*x/c*	CP	*x/c*	CP	*x/c*	CP
0.020	0.451	0.000	0.522	0.000	0.300**	0.010	0.032
0.060	-0.006	0.020	0.336	0.020	0.351	0.020	-0.054
0.110	-0.303	0.040	0.231	0.060	0.526**	0.060	-0.574
0.200	-0.967	0.060	-0.122	0.090	-0.415	0.110	-0.864
0.230	-0.913	0.090	-0.295	0.110	-0.563	0.140	-1.108
0.400	-0.794	0.130	-0.526	0.130	-1.732**	0.190	-1.732**
0.490	-0.697	0.150	-0.768	0.150	-0.909	0.250	-1.133
0.590	-0.689	0.200	-0.849	0.210	-0.930	0.400	-0.827
0.630	-0.624	0.250	-0.932	0.250	-0.948	0.490	-0.679
0.700	-0.662	0.260	-0.899	0.340	-0.983	0.580	-0.619
0.750	-0.218	0.280	-0.930	0.370	-0.985	0.650	-0.642
0.810	-0.191	0.290	-0.939	0.400	-0.950	0.700	-0.626
0.840	-0.170	0.310	-0.880	0.410	-0.587**	0.750	-0.634
0.900	-0.191	0.320	-0.906	0.430	-1.000	0.800	-0.730
0.960	-0.120	0.340	-0.914	0.440	-0.982	0.830	-0.722
		0.350	-0.449**	0.460	-0.815	0.900	-0.386
		0.370	-0.897	0.490	-0.951	0.960	-0.230
		0.380	-0.947	0.500	-0.997		
		0.400	-0.871	0.520	-0.990		
		0.410	-0.896	0.540	-0.992		
		0.430	-0.900	0.550	-0.972		
		0.440	-0.848	0.580	-0.969		
		0.460	-0.944	0.600	-0.981		
		0.470	-0.922	0.610	-0.966		
		0.490	-0.911	0.650	-1.104		
		0.500	-0.925	0.700	-0.994		
		0.520	-0.906	0.750	-0.765		
		0.530	-0.899	0.820	-0.476		
		0.550	-0.925	0.890	-0.382		
		0.560	-0.926	0.900	-0.382		
		0.580	-0.907	0.960	-0.317		
		0.590	-0.941				
		0.600	-0.928				
		0.640	-0.362				
		0.700	-0.347				
		0.750	-0.115**				
		0.820	-0.302				
		0.870	-0.296				
		0.930	-0.292				
		0.960	-0.283				
			Lower Surface				
0.020	-0.824	0.020	-0.427	0.020	-0.383	0.020	0.109
0.110	-0.163	0.060	-0.154	0.060	0.132	0.060	-0.113
0.230	-0.059	0.090	-0.077	0.090	0.097	0.110	0.095
0.400	-0.104	0.120	0.027	0.120	0.007	0.250	-0.014
0.490	-0.155	0.200	-0.061	0.200	-0.081	0.400	-0.119
0.630	1.009**	0.260	-0.022	0.250	-0.018	0.490	-0.245
0.750	-0.111	0.400	-0.138	0.400	-0.154	0.580	-0.374
0.850	-0.070	0.490	-0.179	0.490	-0.130	0.650	-0.560
0.900	0.037	0.580	-0.228	0.580	-0.374	0.750	0.116
0.960	0.030	0.640	-0.017	0.650	-0.118	0.830	0.261
		0.750	0.103	0.750	-0.116	0.900	0.304
		0.870	0.151	0.890	0.257	0.960	0.207
		0.930	0.086	0.930	0.182		
		0.960	0.011	0.960	0.233		
CN =	0.416		0.527		0.697		0.652

Table J-2. Continued.

Flight 211, Wing sweep = 26°, Time = 11-45-23-500, MINF = 0.896, Camber = 5/10, ALPT = 3.20, BETA = 0.17, QINF = 596.0, RNPU = 4.5E+06, CNWP = 0.1808

η = 0.93		0.76		0.59		0.40	
			Upper Surface				
x/c	CP	*x/c*	CP	*x/c*	CP	*x/c*	CP
0.020	0.463	0.000	0.488	0.000	0.370**	0.010	0.156
0.060	0.129	0.020	0.363	0.020	0.413	0.020	0.067
0.110	-0.144	0.040	0.311	0.060	0.885**	0.060	-0.265
0.200	-0.601	0.060	0.029	0.090	-0.140	0.110	-0.395
0.230	-0.479	0.090	-0.105	0.110	-0.298	0.140	-0.690
0.400	-0.159	0.130	-0.264	0.130	-1.778**	0.190	-1.778**
0.490	-0.149	0.150	-0.457	0.150	-0.578	0.250	-0.534
0.590	-0.204	0.200	-0.489	0.210	-0.582	0.400	-0.247
0.630	-0.227	0.250	-0.526	0.250	-0.562	0.490	-0.229
0.700	-0.351	0.260	-0.503	0.340	-0.186	0.580	-0.245
0.750	-0.791	0.280	-0.491	0.370	-0.193	0.650	-0.321
0.810	-0.679	0.290	-0.361	0.400	-0.196	0.700	-0.301
0.840	-0.740	0.310	-0.192	0.410	-0.560**	0.750	-0.391
0.900	-0.279	0.320	-0.180	0.430	-0.236	0.800	-0.953
0.960	-0.288	0.340	-0.168	0.440	-0.236	0.830	-0.917
		0.350	-0.256**	0.460	-0.224	0.900	-0.428
		0.370	-0.184	0.490	-0.191	0.960	-0.430
		0.380	-0.214	0.500	-0.250		
		0.400	-0.186	0.520	-0.239		
		0.410	-0.264	0.540	-0.246		
		0.430	-0.251	0.550	-0.232		
		0.440	-0.239	0.580	-0.231		
		0.460	-0.297	0.600	-0.243		
		0.470	-0.279	0.610	-0.252		
		0.490	-0.252	0.650	-0.546		
		0.500	-0.218	0.700	-0.455		
		0.520	-0.215	0.750	-0.445		
		0.530	-0.229	0.820	-0.950		
		0.550	-0.267	0.890	-0.487		
		0.560	-0.259	0.900	-0.495		
		0.580	-0.230	0.960	-0.476		
		0.590	-0.250				
		0.600	-0.252				
		0.640	-0.469				
		0.700	-0.414				
		0.750	-0.099**				
		0.820	-0.530				
		0.870	-0.402				
		0.930	-0.328				
		0.960	-0.339				
			Lower Surface				
0.020	-1.262	0.020	-0.967	0.020	-1.093	0.020	-0.351
0.110	-0.610	0.060	-0.963	0.060	-0.812	0.060	-0.069
0.230	-0.287	0.090	-0.822	0.090	-0.434	0.110	-0.306
0.400	0.060	0.120	-0.769	0.120	-0.467	0.250	-0.421
0.490	0.075	0.200	-0.364	0.200	-0.293	0.400	-0.367
0.630	1.139**	0.260	-0.298	0.250	-0.418	0.490	-0.439
0.750	0.186	0.400	-0.043	0.400	-0.357	0.580	-0.173
0.850	0.229	0.490	-0.010	0.490	-0.113	0.650	0.062
0.900	0.317	0.580	0.060	0.580	-0.007	0.750	0.273
0.960	0.145	0.640	0.280	0.650	-0.112	0.830	0.385
		0.750	0.323	0.750	-0.063	0.900	0.458
		0.870	0.385	0.890	0.430	0.960	0.357
		0.930	0.320	0.930	0.357		
		0.960	0.215	0.960	0.365		
CN =	0.280		0.249		0.231		0.315

Table J-2. Continued.

Flight 211, Wing sweep = 26°, Time = 11-45-51-500, MINF = 0.899, Camber = 5/11, ALPT = 4.09, BETA = -0.10, QINF = 596.2, RNPU = 4.5E+06, CNWP = 0.3033

η = 0.93		0.76		0.59		0.40	
			Upper Surface				
x/c	CP	*x/c*	CP	*x/c*	CP	*x/c*	CP
0.020	0.428	0.000	0.545	0.000	0.396**	0.010	0.056
0.060	0.081	0.020	0.321	0.020	0.356	0.020	-0.019
0.110	-0.183	0.040	0.273	0.060	0.838**	0.060	-0.359
0.200	-0.668	0.060	-0.024	0.090	-0.186	0.110	-0.485
0.230	-0.555	0.090	-0.137	0.110	-0.338	0.140	-0.735
0.400	-0.068	0.130	-0.309	0.130	-1.769**	0.190	-1.769**
0.490	-0.098	0.150	-0.491	0.150	-0.610	0.250	-0.508
0.590	-0.195	0.200	-0.519	0.210	-0.613	0.400	-0.365
0.630	-0.234	0.250	-0.584	0.250	-0.618	0.490	-0.275
0.700	-0.340	0.260	-0.552	0.340	-0.628	0.580	-0.263
0.750	-0.859	0.280	-0.573	0.370	-0.641	0.650	-0.343
0.810	-0.803	0.290	-0.563	0.400	-0.562	0.700	-0.326
0.840	-0.845	0.310	-0.521	0.410	-0.551**	0.750	-0.415
0.900	-0.292	0.320	-0.528	0.430	-0.355	0.800	-0.960
0.960	-0.312	0.340	-0.529	0.440	-0.272	0.830	-0.922
		0.350	-0.359**	0.460	-0.260	0.900	-0.424
		0.370	-0.540	0.490	-0.201	0.960	-0.422
		0.380	-0.574	0.500	-0.251		
		0.400	-0.498	0.520	-0.223		
		0.410	-0.533	0.540	-0.223		
		0.430	-0.497	0.550	-0.217		
		0.440	-0.448	0.580	-0.215		
		0.460	-0.365	0.600	-0.235		
		0.470	-0.247	0.610	-0.257		
		0.490	-0.216	0.650	-0.526		
		0.500	-0.177	0.700	-0.437		
		0.520	-0.179	0.750	-0.430		
		0.530	-0.171	0.820	-0.947		
		0.550	-0.181	0.890	-0.480		
		0.560	-0.166	0.900	-0.512		
		0.580	-0.144	0.960	-0.477		
		0.590	-0.170				
		0.600	-0.182				
		0.640	-0.432				
		0.700	-0.356				
		0.750	-0.082**				
		0.820	-0.564				
		0.870	-0.397				
		0.930	-0.347				
		0.960	-0.349				
			Lower Surface				
0.020	-1.221	0.020	-0.959	0.020	-1.014	0.020	-0.223
0.110	-0.535	0.060	-0.906	0.060	-0.386	0.060	-0.061
0.230	-0.172	0.090	-0.814	0.090	-0.308	0.110	-0.216
0.400	0.051	0.120	-0.431	0.120	-0.411	0.250	-0.329
0.490	0.066	0.200	-0.167	0.200	-0.189	0.400	-0.347
0.630	1.147**	0.260	-0.153	0.250	-0.330	0.490	-0.442
0.750	0.197	0.400	-0.061	0.400	-0.205	0.580	-0.167
0.850	0.222	0.490	-0.015	0.490	-0.093	0.650	0.056
0.900	0.305	0.580	0.045	0.580	-0.008	0.750	0.291
0.960	0.137	0.640	0.286	0.650	-0.096	0.830	0.414
		0.750	0.335	0.750	-0.064	0.900	0.472
		0.870	0.407	0.890	0.438	0.960	0.350
		0.930	0.340	0.930	0.358		
		0.960	0.214	0.960	0.359		
CN =	0.318		0.354		0.366		0.379

Table J-2. Continued.

Flight 211, Wing sweep = 26°, Time = 11-45-57-000, MINF = 0.900, Camber = 5/10, ALPT = 6.03, BETA = 0.02, QINF = 594.8, RNPU = 4.5E+06, CNWP = 0.3696

η = 0.93		0.76		0.59		0.40	
			Upper Surface				
x/c	CP	*x/c*	CP	*x/c*	CP	*x/c*	CP
0.020	0.335	0.000	0.665	0.000	0.444**	0.010	-0.136
0.060	0.002	0.020	0.194	0.020	0.175	0.020	-0.179
0.110	-0.241	0.040	0.153	0.060	0.674**	0.060	-0.545
0.200	-0.741	0.060	-0.123	0.090	-0.286	0.110	-0.697
0.230	-0.634	0.090	-0.224	0.110	-0.436	0.140	-0.866
0.400	-0.539	0.130	-0.381	0.130	-1.764**	0.190	-1.764**
0.490	-0.435	0.150	-0.571	0.150	-0.690	0.250	-0.856
0.590	-0.432	0.200	-0.596	0.210	-0.707	0.400	-0.641
0.630	-0.340	0.250	-0.698	0.250	-0.727	0.490	-0.464
0.700	-0.426	0.260	-0.665	0.340	-0.763	0.580	-0.403
0.750	-0.662	0.280	-0.691	0.370	-0.771	0.650	-0.449
0.810	-0.706	0.290	-0.680	0.400	-0.751	0.700	-0.429
0.840	-0.775	0.310	-0.655	0.410	-0.544**	0.750	-0.484
0.900	-0.320	0.320	-0.663	0.430	-0.771	0.800	-0.954
0.960	-0.323	0.340	-0.671	0.440	-0.754	0.830	-0.964
		0.350	-0.368**	0.460	-0.765	0.900	-0.456
		0.370	-0.666	0.490	-0.713	0.960	-0.452
		0.380	-0.712	0.500	-0.787		
		0.400	-0.645	0.520	-0.772		
		0.410	-0.684	0.540	-0.758		
		0.430	-0.657	0.550	-0.669		
		0.440	-0.630	0.580	-0.555		
		0.460	-0.702	0.600	-0.532		
		0.470	-0.679	0.610	-0.529		
		0.490	-0.680	0.650	-0.628		
		0.500	-0.682	0.700	-0.535		
		0.520	-0.670	0.750	-0.521		
		0.530	-0.661	0.820	-0.829		
		0.550	-0.689	0.890	-0.416		
		0.560	-0.688	0.900	-0.439		
		0.580	-0.672	0.960	-0.405		
		0.590	-0.702				
		0.600	-0.713				
		0.640	-0.774				
		0.700	-0.789				
		0.750	-0.062**				
		0.820	-0.361				
		0.870	-0.312				
		0.930	-0.337				
		0.960	-0.337				
			Lower Surface				
0.020	-1.138	0.020	-0.952	0.020	-0.770	0.020	0.076
0.110	-0.121	0.060	-0.315	0.060	-0.065	0.060	-0.067
0.230	-0.077	0.090	-0.184	0.090	-0.103	0.110	-0.066
0.400	-0.022	0.120	-0.124	0.120	-0.239	0.250	-0.187
0.490	0.009	0.200	-0.070	0.200	-0.097	0.400	-0.212
0.630	1.159**	0.260	-0.119	0.250	-0.176	0.490	-0.287
0.750	0.175	0.400	-0.063	0.400	-0.128	0.580	-0.165
0.850	0.211	0.490	-0.024	0.490	-0.070	0.650	0.088
0.900	0.294	0.580	0.046	0.580	-0.017	0.750	0.344
0.960	0.123	0.640	0.278	0.650	-0.070	0.830	0.454
		0.750	0.343	0.750	-0.070	0.900	0.517
		0.870	0.407	0.890	0.489	0.960	0.362
		0.930	0.329	0.930	0.398		
		0.960	0.216	0.960	0.377		
CN =	0.490		0.591		0.573		0.621

Table J-2. Continued.

Flight 211, Wing sweep = 26°, Time = 11-46-1-000, MINF = 0.891, Camber = 5/10, ALPT = 7.16, BETA = 0.05, QINF = 580.3, RNPU = 4.4E+06, CNWP = 0.4117

η = 0.93		0.76		0.59		0.40	
			Upper Surface				
x/c	CP	*x/c*	CP	*x/c*	CP	*x/c*	CP
0.020	0.239	0.000	0.747	0.000	0.414**	0.010	-0.526
0.060	-0.086	0.020	0.025	0.020	0.014	0.020	-0.224
0.110	-0.306	0.040	0.038	0.060	0.601**	0.060	-0.650
0.200	-0.737	0.060	-0.235	0.090	-0.471	0.110	-0.821
0.230	-0.676	0.090	-0.321	0.110	-0.563	0.140	-0.987
0.400	-0.628	0.130	-0.487	0.130	-1.798**	0.190	-1.798**
0.490	-0.517	0.150	-0.643	0.150	-0.773	0.250	-0.979
0.590	-0.511	0.200	-0.677	0.210	-0.787	0.400	-0.716
0.630	-0.418	0.250	-0.786	0.250	-0.810	0.490	-0.581
0.700	-0.485	0.260	-0.752	0.340	-0.846	0.580	-0.478
0.750	-0.570	0.280	-0.790	0.370	-0.860	0.650	-0.533
0.810	-0.600	0.290	-0.773	0.400	-0.863	0.700	-0.501
0.840	-0.656	0.310	-0.744	0.410	-0.547**	0.750	-0.557
0.900	-0.360	0.320	-0.755	0.430	-0.872	0.800	-0.968
0.960	-0.375	0.340	-0.770	0.440	-0.847	0.830	-0.931
		0.350	-0.382**	0.460	-0.796	0.900	-0.489
		0.370	-0.762	0.490	-0.817	0.960	-0.486
		0.380	-0.807	0.500	-0.890		
		0.400	-0.740	0.520	-0.876		
		0.410	-0.785	0.540	-0.869		
		0.430	-0.746	0.550	-0.845		
		0.440	-0.721	0.580	-0.845		
		0.460	-0.799	0.600	-0.837		
		0.470	-0.781	0.610	-0.811		
		0.490	-0.771	0.650	-0.787		
		0.500	-0.759	0.700	-0.669		
		0.520	-0.760	0.750	-0.620		
		0.530	-0.755	0.820	-0.519		
		0.550	-0.796	0.890	-0.415		
		0.560	-0.789	0.900	-0.428		
		0.580	-0.770	0.960	-0.390		
		0.590	-0.800				
		0.600	-0.807				
		0.640	-0.848				
		0.700	-0.874				
		0.750	-0.050**				
		0.820	-0.352				
		0.870	-0.308				
		0.930	-0.327				
		0.960	-0.322				
			Lower Surface				
0.020	-0.963	0.020	-0.854	0.020	-0.200	0.020	0.195
0.110	-0.173	0.060	-0.004	0.060	0.057	0.060	-0.066
0.230	-0.020	0.090	-0.082	0.090	0.005	0.110	0.031
0.400	-0.016	0.120	-0.049	0.120	-0.158	0.250	-0.111
0.490	0.007	0.200	-0.019	0.200	-0.045	0.400	-0.151
0.630	1.198**	0.260	-0.075	0.250	-0.076	0.490	-0.187
0.750	0.165	0.400	-0.046	0.400	-0.080	0.580	-0.126
0.850	0.191	0.490	-0.013	0.490	-0.062	0.650	0.112
0.900	0.276	0.580	0.040	0.580	-0.002	0.750	0.357
0.960	0.102	0.640	0.289	0.650	-0.073	0.830	0.460
		0.750	0.337	0.750	-0.065	0.900	0.518
		0.870	0.412	0.890	0.489	0.960	0.350
		0.930	0.344	0.930	0.391		
		0.960	0.218	0.960	0.388		
CN =	0.524		0.697		0.682		0.741

Table J-2. Continued.

Flight 211, Wing sweep = 26°, Time = 11-46-14-500, MINF = 0.894, Camber = 5/10, ALPT = 7.99, BETA = 0.22, QINF = 628.8, RNPU = 4.8E+06, CNWP = 0.4275

η = 0.93		0.76		0.59		0.40	
			Upper Surface				
x/c	CP	*x/c*	CP	*x/c*	CP	*x/c*	CP
0.020	0.204	0.000	0.795	0.000	0.424**	0.010	-0.556
0.060	-0.108	0.020	-0.026	0.020	-0.042	0.020	-0.536
0.110	-0.307	0.040	-0.015	0.060	0.464**	0.060	-0.644
0.200	-0.748	0.060	-0.271	0.090	-0.528	0.110	-0.873
0.230	-0.699	0.090	-0.340	0.110	-0.608	0.140	-1.018
0.400	-0.650	0.130	-0.498	0.130	-1.788**	0.190	-1.788**
0.490	-0.553	0.150	-0.665	0.150	-0.802	0.250	-1.031
0.590	-0.545	0.200	-0.687	0.210	-0.817	0.400	-0.747
0.630	-0.459	0.250	-0.804	0.250	-0.848	0.490	-0.616
0.700	-0.527	0.260	-0.774	0.340	-0.877	0.580	-0.525
0.750	-0.542	0.280	-0.812	0.370	-0.882	0.650	-0.567
0.810	-0.576	0.290	-0.807	0.400	-0.870	0.700	-0.543
0.840	-0.642	0.310	-0.764	0.410	-0.633**	0.750	-0.587
0.900	-0.398	0.320	-0.778	0.430	-0.901	0.800	-0.973
0.960	-0.431	0.340	-0.790	0.440	-0.880	0.830	-0.999
		0.350	-0.377**	0.460	-0.862	0.900	-0.607
		0.370	-0.782	0.490	-0.840	0.960	-0.519
		0.380	-0.830	0.500	-0.909		
		0.400	-0.759	0.520	-0.902		
		0.410	-0.813	0.540	-0.908		
		0.430	-0.783	0.550	-0.890		
		0.440	-0.757	0.580	-0.887		
		0.460	-0.836	0.600	-0.883		
		0.470	-0.810	0.610	-0.870		
		0.490	-0.795	0.650	-0.989		
		0.500	-0.804	0.700	-0.841		
		0.520	-0.795	0.750	-0.738		
		0.530	-0.788	0.820	-0.523		
		0.550	-0.798	0.890	-0.443		
		0.560	-0.819	0.900	-0.444		
		0.580	-0.799	0.960	-0.429		
		0.590	-0.835				
		0.600	-0.833				
		0.640	-0.875				
		0.700	-0.888				
		0.750	-0.053**				
		0.820	-0.338				
		0.870	-0.331				
		0.930	-0.344				
		0.960	-0.339				
			Lower Surface				
0.020	-0.853	0.020	-0.252	0.020	-0.134	0.020	0.357
0.110	-0.169	0.060	0.040	0.060	0.103	0.060	-0.113
0.230	-0.005	0.090	-0.035	0.090	0.053	0.110	0.111
0.400	-0.010	0.120	-0.017	0.120	-0.100	0.250	-0.084
0.490	0.004	0.200	-0.002	0.200	-0.035	0.400	-0.131
0.630	0.977**	0.260	-0.047	0.250	-0.053	0.490	-0.158
0.750	0.156	0.400	-0.026	0.400	-0.061	0.580	-0.104
0.850	0.189	0.490	-0.005	0.490	-0.064	0.650	0.129
0.900	0.273	0.580	0.047	0.580	0.002	0.750	0.381
0.960	0.091	0.640	0.294	0.650	-0.071	0.830	0.478
		0.750	0.339	0.750	-0.185	0.900	0.535
		0.870	0.426	0.890	0.500	0.960	0.361
		0.930	0.349	0.930	0.401		
		0.960	0.225	0.960	0.397		
CN =	0.546		0.731		0.732		0.813

Table J-2. Continued.

Flight 211, Wing sweep = 26°, Time = 11-46-17-000, MINF = 0.898, Camber = 5/10, ALPT = 8.05, BETA = 0.05, QINF = 650.2, RNPU = 4.9E+06, CNWP = 0.4384

η = 0.93		0.76		0.59		0.40	
			Upper Surface				
x/c	CP	*x/c*	CP	*x/c*	CP	*x/c*	CP
0.020	0.209	0.000	0.787	0.000	0.411**	0.010	-0.541
0.060	-0.111	0.020	-0.010	0.020	-0.044	0.020	-0.557
0.110	-0.320	0.040	-0.006	0.060	0.402**	0.060	-0.671
0.200	-0.752	0.060	-0.270	0.090	-0.530	0.110	-0.859
0.230	-0.696	0.090	-0.331	0.110	-0.609	0.140	-1.015
0.400	-0.654	0.130	-0.496	0.130	-1.771**	0.190	-1.771**
0.490	-0.543	0.150	-0.661	0.150	-0.796	0.250	-1.026
0.590	-0.552	0.200	-0.683	0.210	-0.815	0.400	-0.738
0.630	-0.466	0.250	-0.788	0.250	-0.844	0.490	-0.612
0.700	-0.536	0.260	-0.764	0.340	-0.877	0.580	-0.527
0.750	-0.535	0.280	-0.805	0.370	-0.885	0.650	-0.561
0.810	-0.584	0.290	-0.801	0.400	-0.853	0.700	-0.540
0.840	-0.665	0.310	-0.754	0.410	-0.654**	0.750	-0.580
0.900	-0.415	0.320	-0.775	0.430	-0.887	0.800	-0.983
0.960	-0.436	0.340	-0.787	0.440	-0.868	0.830	-1.018
		0.350	-0.379**	0.460	-0.876	0.900	-0.628
		0.370	-0.779	0.490	-0.820	0.960	-0.564
		0.380	-0.825	0.500	-0.901		
		0.400	-0.758	0.520	-0.888		
		0.410	-0.810	0.540	-0.900		
		0.430	-0.780	0.550	-0.884		
		0.440	-0.753	0.580	-0.879		
		0.460	-0.820	0.600	-0.882		
		0.470	-0.812	0.610	-0.870		
		0.490	-0.794	0.650	-0.993		
		0.500	-0.799	0.700	-0.854		
		0.520	-0.788	0.750	-0.735		
		0.530	-0.781	0.820	-0.561		
		0.550	-0.806	0.890	-0.468		
		0.560	-0.818	0.900	-0.460		
		0.580	-0.792	0.960	-0.454		
		0.590	-0.828				
		0.600	-0.825				
		0.640	-0.877				
		0.700	-0.889				
		0.750	-0.069**				
		0.820	-0.354				
		0.870	-0.344				
		0.930	-0.358				
		0.960	-0.351				
			Lower Surface				
0.020	-0.878	0.020	-0.245	0.020	-0.137	0.020	0.357
0.110	-0.180	0.060	0.033	0.060	0.105	0.060	-0.125
0.230	-0.016	0.090	-0.041	0.090	0.047	0.110	0.088
0.400	-0.022	0.120	-0.025	0.120	-0.102	0.250	-0.089
0.490	-0.004	0.200	-0.014	0.200	-0.047	0.400	-0.140
0.630	0.903**	0.260	-0.049	0.250	-0.059	0.490	-0.175
0.750	0.149	0.400	-0.031	0.400	-0.065	0.580	-0.105
0.850	0.183	0.490	-0.014	0.490	-0.075	0.650	0.127
0.900	0.264	0.580	0.038	0.580	-0.007	0.750	0.377
0.960	0.084	0.640	0.287	0.650	-0.083	0.830	0.479
		0.750	0.331	0.750	-0.127	0.900	0.535
		0.870	0.424	0.890	0.502	0.960	0.355
		0.930	0.335	0.930	0.394		
		0.960	0.211	0.960	0.382		
CN =	0.541		0.723		0.738		0.809

Table J-2. Continued.

Flight 231, Wing sweep = 26°, Time = 13-33-23-000, MINF = 0.631, Camber = 7/-1, ALPT = 11.45, BETA = -0.27, QINF = 387.6, RNPU = 3.8E+06, CNWP = 0.4439

η = 0.93		0.76		0.59		0.40	
			Upper Surface				
x/c	CP	*x/c*	CP	*x/c*	CP	*x/c*	CP
0.020	-1.210	0.000	0.317	0.000	3.008**	0.010	-2.006
0.060	-1.031	0.020	-1.879	0.020	-1.962	0.020	-2.035
0.110	-0.968	0.040	-1.335**	0.060	-1.565**	0.060	-1.944
0.200	-0.718	0.060	-1.436	0.090	-1.861	0.110	-1.447
0.230	-0.605	0.090	-1.656	0.110	-1.946	0.140	-1.131
0.400	-0.389	0.130	-1.202	0.130	-2.031	0.190	-3.585**
0.490	-0.372	0.150	-1.519	0.150	-1.455	0.250	-0.740
0.590	-0.366	0.200	-1.186	0.210	-1.258	0.400	-0.552
0.630	-0.344	0.250	-0.172**	0.250	-0.728	0.490	-0.461
0.700	-0.253	0.260	-0.653	0.340	-0.181**	0.580	-0.435
0.750	-0.257	0.280	0.748**	0.370	0.407**	0.650	-0.514
0.810	-0.249	0.290	-0.123**	0.400	-0.548	0.700	-0.499
0.840	-0.226	0.310	0.179**	0.410	-0.060**	0.750	-0.505
0.900	-0.247	0.320	-0.041**	0.430	-0.089**	0.800	-0.538
0.960	-0.156	0.340	0.407**	0.440	-0.123**	0.830	-0.391
		0.350	-0.619**	0.460	0.086**	0.900	-0.356
		0.370	0.288**	0.490	-0.472	0.960	-0.326
		0.380	-0.148**	0.500	-0.010**		
		0.400	-0.482	0.520	-0.069**		
		0.410	0.523**	0.540	0.146**		
		0.430	0.411**	0.550	0.008**		
		0.440	-0.518	0.580	-0.452		
		0.460	-0.022**	0.600	-0.151**		
		0.470	0.658**	0.610	0.213**		
		0.490	-0.491	0.650	3.151**		
		0.500	0.599**	0.700	-0.564		
		0.520	0.765**	0.750	-0.631		
		0.530	-0.469	0.820	-0.502		
		0.550	0.662**	0.890	-0.155		
		0.560	0.275**	0.900	-0.133		
		0.580	-0.471	0.960	-0.088		
		0.590	0.917**				
		0.600	0.078**				
		0.640	-0.570				
		0.700	-0.600				
		0.750	-0.126**				
		0.820	-0.539				
		0.870	-0.164				
		0.930	-0.334				
		0.960	-0.249				
			Lower Surface				
0.020	0.300	0.020	0.466	0.020	0.526	0.020	0.716
0.110	0.139	0.060	0.418	0.060	0.460	0.060	2.917**
0.230	0.158	0.090	0.327	0.090	0.797**	0.110	0.380
0.400	0.054	0.120	0.315**	0.120	0.209	0.250	0.188
0.490	0.024	0.200	0.147	0.200	0.121	0.400	0.149
0.630	0.769**	0.260	0.222	0.250	0.238	0.490	0.106
0.750	-0.072	0.400	0.122	0.400	0.125	0.580	0.074
0.850	-0.047	0.490	0.087	0.490	-0.010	0.650	0.179
0.900	0.012	0.580	0.072	0.580	0.133	0.750	0.371
0.960	-0.004	0.640	0.206	0.650	-0.086	0.830	0.437
		0.750	0.097	0.750	0.057	0.900	0.488
		0.870	0.069	0.890	0.440	0.960	0.284
		0.930	0.031	0.930	0.361		
		0.960	-0.014	0.960	-0.127**		
CN =	0.471		0.827		0.843		0.929

Table J-2. Continued.

Flight 211, Wing sweep = 26°, Time = 11-38-33-000, MINF = 0.850, Camber = 0/2, ALPT = 5.51, BETA = 0.08, QINF = 253.3, RNPU = 2.0E+06, CNWP = 0.2692

η = 0.93		0.76		0.59		0.40	
			Upper Surface				
x/c	CP	*x/c*	CP	*x/c*	CP	*x/c*	CP
0.020	-0.526	0.000	0.847	0.000	0.375**	0.010	-0.950
0.060	-0.622	0.020	-0.783	0.020	-0.762	0.020	-0.958
0.110	-0.575	0.040	-0.574	0.060	1.527**	0.060	-0.952
0.200	-0.264	0.060	-0.784	0.090	-0.815	0.110	-0.898
0.230	-0.354	0.090	-0.735	0.110	-0.884	0.140	-0.914
0.400	-0.239	0.130	-0.735	0.130	-1.975**	0.190	-1.975**
0.490	-0.215	0.150	-0.732	0.150	-0.784	0.250	-0.930
0.590	-0.293	0.200	-0.585	0.210	-0.773	0.400	-0.704
0.630	-0.289	0.250	-0.791	0.250	-0.788	0.490	-0.315
0.700	-0.234	0.260	-0.736	0.340	-0.799	0.580	-0.310
0.750	-0.271	0.280	-0.761	0.370	-0.836	0.650	-0.359
0.810	-0.276	0.290	-0.779	0.400	-0.744	0.700	-0.351
0.840	-0.231	0.310	-0.731	0.410	0.891**	0.750	-0.424
0.900	-0.156	0.320	-0.729	0.430	-0.347	0.800	-0.406
0.960	-0.030	0.340	-0.746	0.440	-0.249	0.830	-0.310
		0.350	-0.389**	0.460	-0.219	0.900	-0.154
		0.370	-0.414	0.490	-0.152	0.960	0.015
		0.380	-0.271	0.500	-0.215		
		0.400	-0.113	0.520	-0.207		
		0.410	-0.183	0.540	-0.235		
		0.430	-0.154	0.550	-0.223		
		0.440	-0.109	0.580	-0.260		
		0.460	-0.197	0.600	-0.238		
		0.470	-0.185	0.610	-0.252		
		0.490	-0.212	0.650	-0.707		
		0.500	-0.254	0.700	-0.493		
		0.520	-0.213	0.750	-0.470		
		0.530	-0.235	0.820	-0.360		
		0.550	-0.313	0.890	-0.107		
		0.560	-0.277	0.900	-0.076		
		0.580	-0.265	0.960	0.080		
		0.590	-0.323				
		0.600	-0.330				
		0.640	-0.462				
		0.700	-0.340				
		0.750	-0.021**				
		0.820	-0.273				
		0.870	-0.240				
		0.930	-0.096				
		0.960	-0.041				
			Lower Surface				
0.020	-0.207	0.020	-0.019	0.020	0.090	0.020	0.412
0.110	-0.234	0.060	0.079	0.060	0.100	0.060	-0.046
0.230	-0.079	0.090	-0.072	0.090	-0.015	0.110	-0.003
0.400	-0.090	0.120	-0.127	0.120	-0.319	0.250	-0.225
0.490	-0.071	0.200	-0.140	0.200	-0.195	0.400	-0.258
0.630	4.888**	0.260	-0.254	0.250	-0.197	0.490	-0.315
0.750	0.011	0.400	-0.184	0.400	-0.213	0.580	-0.325
0.850	0.085	0.490	-0.189	0.490	-0.048	0.650	-0.141
0.900	0.186	0.580	-0.178	0.580	-0.226	0.750	0.095
0.960	0.129	0.640	0.016	0.650	-0.053	0.830	0.260
		0.750	0.164	0.750	-0.035	0.900	0.321
		0.870	0.234	0.890	0.294	0.960	0.244
		0.930	0.208	0.930	0.259		
		0.960	0.196	0.960	0.402		
CN =	0.238		0.381		0.413		0.466

Table J-2. Concluded.

Flight 211, Wing sweep = 26°, Time = 11-39-16-000, MINF = 0.850, Camber = 0/2, ALPT = 5.60, BETA = 0.11, QINF = 252.9, RNPU = 2.0E+06, CNWP = 0.2661

η = 0.93		0.76		0.59		0.40	
			Upper Surface				
x/c	CP	*x/c*	CP	*x/c*	CP	*x/c*	CP
0.020	-0.565	0.000	0.844	0.000	0.292**	0.010	-0.984
0.060	-0.657	0.020	-0.892	0.020	-0.790	0.020	-0.960
0.110	-0.593	0.040	-0.592	0.060	1.529**	0.060	-0.996
0.200	-0.279	0.060	-0.785	0.090	-0.853	0.110	-0.923
0.230	-0.376	0.090	-0.764	0.110	-0.903	0.140	-0.936
0.400	-0.231	0.130	-0.728	0.130	-1.978**	0.190	-1.978**
0.490	-0.228	0.150	-0.762	0.150	-0.803	0.250	-0.957
0.590	-0.276	0.200	-0.618	0.210	-0.803	0.400	-0.739
0.630	-0.285	0.250	-0.789	0.250	-0.820	0.490	-0.316
0.700	-0.230	0.260	-0.728	0.340	-0.854	0.580	-0.311
0.750	-0.267	0.280	-0.791	0.370	-0.837	0.650	-0.372
0.810	-0.241	0.290	-0.791	0.400	-0.815	0.700	-0.352
0.840	-0.249	0.310	-0.748	0.410	0.892**	0.750	-0.424
0.900	-0.135	0.320	-0.741	0.430	-0.383	0.800	-0.395
0.960	-0.030	0.340	-0.746	0.440	-0.268	0.830	-0.300
		0.350	-0.390**	0.460	-0.257	0.900	-0.154
		0.370	-0.614	0.490	-0.161	0.960	0.015
		0.380	-0.337	0.500	-0.237		
		0.400	-0.165	0.520	-0.208		
		0.410	-0.205	0.540	-0.210		
		0.430	-0.154	0.550	-0.223		
		0.440	-0.102	0.580	-0.260		
		0.460	-0.201	0.600	-0.256		
		0.470	-0.177	0.610	-0.252		
		0.490	-0.203	0.650	-0.659		
		0.500	-0.222	0.700	-0.480		
		0.520	-0.241	0.750	-0.453		
		0.530	-0.245	0.820	-0.361		
		0.550	-0.296	0.890	-0.107		
		0.560	-0.288	0.900	-0.073		
		0.580	-0.258	0.960	0.068		
		0.590	-0.287				
		0.600	-0.324				
		0.640	-0.427				
		0.700	-0.345				
		0.750	-0.017**				
		0.820	-0.269				
		0.870	-0.227				
		0.930	-0.070				
		0.960	-0.024				
			Lower Surface				
0.020	-0.225	0.020	-0.007	0.020	0.072	0.020	0.421
0.110	-0.219	0.060	0.070	0.060	0.097	0.060	-0.028
0.230	-0.052	0.090	-0.083	0.090	-0.010	0.110	0.003
0.400	-0.103	0.120	-0.119	0.120	-0.320	0.250	-0.217
0.490	-0.062	0.200	-0.114	0.200	-0.172	0.400	-0.250
0.630	4.896**	0.260	-0.246	0.250	-0.189	0.490	-0.306
0.750	0.011	0.400	-0.162	0.400	-0.202	0.580	-0.307
0.850	0.090	0.490	-0.185	0.490	-0.044	0.650	-0.155
0.900	0.168	0.580	-0.160	0.580	-0.226	0.750	0.119
0.960	0.142	0.640	0.016	0.650	-0.053	0.830	0.270
		0.750	0.202	0.750	-0.053	0.900	0.329
		0.870	0.256	0.890	0.290	0.960	0.244
		0.930	0.208	0.930	0.254		
		0.960	0.170	0.960	0.408		
CN =	0.247		0.401		0.427		0.486

APPENDIX K

Boundary-Layer Data

Leading-edge wing sweep is 26°. Table K-1 contains a summary of the data listing in table K-2. Camber is either $\delta_{LE/TE}$ or $\delta_{LE/I/M/O}$. Refer to Nomenclature for definitions.

Table K-1. Summary of data.

Flight/Time	QINF, lb/ft^2	MINF	ALPT, deg	BETA, deg	THETA, in.	Camber
229/11.17.26.000	304.	0.605	6.47	0.40	0.163	0/2
229/11.17.30.000	305.	0.606	6.51	0.51	0.171	0/2
229/11.17.40.000	306.	0.606	6.50	0.46	0.164	0/2
229/11.17.49.000	307.	0.607	6.25	0.51	0.164	0/2
229/11.18.00.000	309.	0.609	6.28	0.48	0.167	0/2
229/11.18.00.500	309.	0.609	6.29	0.54	0.166	0/2
229/11.18.01.000	309.	0.609	6.28	0.51	0.166	0/2
229/11.18.01.500	309.	0.610	6.28	0.54	0.149	0/2
229/11.18.02.000	309.	0.610	6.28	0.48	0.162	0/2
229/11.18.11.500	311.	0.611	6.28	0.22	0.169	0/2
229/11.18.12.000	310.	0.610	6.29	0.02	0.170	0/2
229/11.18.12.500	310.	0.610	6.29	-0.15	0.166	0/2
229/11.18.17.500	308.	0.608	7.03	-0.33	0.174	0/2
229/11.18.34.000	301.	0.603	8.08	-0.09	0.218	0/2
229/11.18.42.000	303.	0.605	8.99	0.14	0.430	0/2
229/11.18.51.500	296.	0.599	10.11	0.34	0.542	0/2
229/11.18.59.000	298.	0.598	10.15	0.17	0.556	0/2
229/11.18.03.500	309.	0.610	6.28	0.46	0.165	0/2
229/11.18.11.500	311.	0.611	6.28	0.22	0.169	0/2
229/11.18.17.500	308.	0.608	7.03	-0.33	0.174	0/2
229/11.18.20.500	306.	0.607	7.74	0.34	0.189	0/2
229/11.18.21.000	306.	0.607	8.03	0.25	0.207	0/2
229/11.18.24.000	303.	0.604	7.83	0.28	0.192	0/2
229/11.18.26.000	303.	0.604	7.81	0.25	0.196	0/2
229/11.18.34.000	301.	0.603	8.08	-0.09	0.218	0/2
229/11.18.36.500	301.	0.603	8.08	-0.15	0.199	0/2
229/11.18.41.500	303.	0.605	8.95	0.08	0.431	0/2
229/11.18.42.000	303.	0.605	8.99	0.14	0.430	0/2
229/11.18.42.500	303.	0.606	9.18	0.37	0.389	0/2
229/11.18.45.000	302.	0.605	9.50	0.22	0.506	0/2
229/11.18.46.500	299.	0.602	9.50	0.14	0.518	0/2

Table K-1. Continued.

Flight/Time	QINF, lb/ft^2	MINF	ALPT, deg	BETA, deg	THETA, in.	Camber
229/11.18.49.000	300.	0.603	10.02	0.05	0.557	0/2
229/11.18.51.000	296.	0.599	10.03	0.22	0.579	0/2
229/11.20.09.000	299.	0.600	6.50	0.34	0.157	5/2
229/11.20.23.500	301.	0.602	6.50	0.34	0.169	5/2
229/11.20.26.000	302.	0.603	6.50	0.37	0.161	5/2
229/11.20.34.000	302.	0.603	6.50	0.11	0.161	5/2
229/11.20.40.000	302.	0.604	6.54	0.08	0.156	5/2
229/11.20.47.000	304.	0.606	6.50	0.34	0.157	5/2
229/11.20.55.500	306.	0.607	6.81	-0.09	0.168	5/2
229/11.20.56.000	306.	0.607	7.08	0.02	0.169	5/2
229/11.21.09.000	301.	0.604	7.96	-0.33	0.188	5/2
229/11.21.13.500	297.	0.600	8.01	-0.18	0.182	5/2
229/11.21.14.000	296.	0.600	8.08	0.19	0.182	5/2
229/11.21.15.500	297.	0.601	8.95	0.19	0.196	5/2
229/11.21.16.500	299.	0.602	8.89	0.11	0.190	5/2
229/11.21.17.000	300.	0.603	9.19	0.11	0.203	5/2
229/11.21.24.000	304.	0.606	10.04	-0.04	0.215	5/2
229/11.21.24.500	304.	0.606	10.02	-0.01	0.212	5/2
229/11.21.31.500	302.	0.602	10.10	-0.12	0.202	5/2
229/11.21.33.000	302.	0.602	10.07	-0.15	0.213	5/2
229/11.26.48.500	302.	0.800	5.90	0.14	0.184	0/2
229/11.27.10.500	304.	0.802	7.12	0.02	0.194	0/2
229/11.27.17.000	297.	0.793	8.04	-0.09	0.222	0/2
229/11.28.05.500	297.	0.798	8.03	-0.27	0.224	0/2
229/11.31.02.500	301.	0.801	5.97	0.02	0.184	5/2
229/11.31.08.000	299.	0.800	6.06	-0.85	0.190	5/2
229/11.31.11.500	298.	0.799	7.03	-0.04	0.206	5/2
229/11.31.13.000	297.	0.798	7.20	0.14	0.208	5/2
229/11.31.17.500	295.	0.796	8.05	-0.07	0.212	5/2
229/11.31.22.500	288.	0.789	8.05	-0.09	0.214	5/2
229/11.31.25.500	288.	0.790	8.05	-0.30	0.216	5/2
229/11.31.34.500	297.	0.805	9.16	0.02	0.429	5/2
229/11.31.42.500	302.	0.809	10.09	-0.18	0.435	5/2
229/11.31.43.500	303.	0.810	10.04	-0.18	0.654	5/2
229/12.37.03.000	301.	0.801	6.07	-0.67	0.180	0/2
229/12.37.18.500	302.	0.800	8.01	-0.07	0.192	0/2
229/12.38.26.500	302.	0.803	6.01	-0.15	0.182	5/2

Table K-1. Continued.

Flight/Time	QINF, lb/ft^2	MINF	ALPT, deg	BETA, deg	THETA, in.	Camber
229/12.38.35.500	302.	0.802	5.98	-0.30	0.174	5/2
229/12.38.57.000	291.	0.791	7.93	-0.18	0.211	5/2
229/12.40.24.500	305.	0.805	5.97	0.11	0.230	10/2
229/12.40.27.500	305.	0.805	5.93	-0.07	0.193	10/2
229/12.41.01.500	312.	0.809	8.42	-0.21	0.398	10/2
229/12.41.02.500	314.	0.811	8.43	-0.01	0.413	10/2
229/12.41.03.000	316.	0.812	8.43	0.02	0.418	10/2
229/12.41.03.500	317.	0.814	8.42	-0.04	0.433	10/2
229/12.43.14.000	306.	0.806	8.01	-0.15	0.245	5/2
229/12.44.02.500	301.	0.802	5.01	-0.24	0.346	5/6
229/12.44.04.500	300.	0.801	5.01	-0.33	0.310	5/6
229/12.44.14.500	301.	0.801	5.10	-0.30	0.334	5/6
229/11.28.13.000	299.	0.803	8.98	0.08	0.391	0/2
229/11.28.13.500	299.	0.803	9.04	0.05	0.384	0/2
229/11.28.20.000	298.	0.803	9.98	0.14	0.573	0/2
229/11.28.24.500	298.	0.803	9.97	0.19	0.510	0/2
229/11.31.34.000	296.	0.804	8.91	0.05	0.380	5/2
229/11.31.44.000	304.	0.810	9.98	-0.09	0.746	5/2
229/11.31.45.500	307.	0.812	10.04	0.37	0.625	5/2
229/11.31.50.000	314.	0.817	10.03	-0.38	0.779	5/2
229/11.31.16.500	296.	0.797	7.94	-0.24	0.243	5/2
229/11.31.21.000	289.	0.790	7.98	-0.12	0.211	5/2
229/11.31.21.500	289.	0.790	8.04	-0.15	0.215	5/2
229/11.31.23.000	288.	0.789	8.07	-0.12	0.231	5/2
229/11.31.26.000	288.	0.791	8.04	-0.47	0.220	5/2
229/11.31.33.500	296.	0.803	8.75	0.14	0.360	5/2
229/11.31.35.000	298.	0.806	9.22	0.11	0.485	5/2
229/11.31.41.500	302.	0.809	9.97	-0.01	0.720	5/2
229/11.31.44.500	305.	0.811	10.03	-0.04	0.710	5/2
229/11.31.45.000	306.	0.812	10.05	0.19	0.657	5/2
229/11.31.46.000	308.	0.813	9.98	0.37	0.614	5/2
229/12.40.44.500	303.	0.801	7.91	-0.36	0.310	10/2
229/12.40.45.500	302.	0.800	8.06	-0.18	0.344	10/2
229/12.40.46.000	301.	0.799	8.06	-0.09	0.353	10/2
229/12.40.50.500	296.	0.793	7.90	-0.36	0.306	10/2
229/12.40.53.000	296.	0.792	8.07	-0.30	0.346	10/2
229/12.40.55.000	297.	0.793	8.06	-0.27	0.369	10/2

Table K-1. Continued.

Flight/Time	QINF, lb/ft^2	MINF	ALPT, deg	BETA, deg	THETA, in.	Camber
229/12.41.01.000	311.	0.808	8.42	-0.21	0.377	10/2
229/12.41.02.000	313.	0.810	8.34	-0.09	0.390	10/2
229/12.41.04.000	318.	0.814	8.40	-0.07	0.415	10/2
229/12.44.01.000	301.	0.802	5.01	-0.27	0.298	5/6
229/12.44.01.500	301.	0.802	4.98	-0.30	0.308	5/6
229/12.44.03.500	301.	0.801	5.04	-0.36	0.343	5/6
229/12.44.04.000	300.	0.801	5.04	-0.30	0.336	5/6
229/12.44.09.000	300.	0.801	4.50	-0.30	0.278	5/6
229/12.44.09.500	300.	0.801	4.55	-0.04	0.299	5/6
229/12.44.13.000	301.	0.802	4.99	-0.15	0.299	5/6
229/12.36.46.000	298.	0.798	5.66	-0.04	0.169	0/2
229/12.36.53.500	299.	0.798	5.65	-0.15	0.184	0/2
229/12.37.02.500	300.	0.800	6.04	-0.41	0.175	0/2
229/12.37.05.000	301.	0.801	6.09	-0.88	0.173	0/2
229/12.37.10.000	302.	0.802	7.05	-0.07	0.173	0/2
229/12.37.11.000	302.	0.802	7.18	-0.36	0.170	0/2
229/12.37.17.500	301.	0.800	8.03	-0.24	0.180	0/2
229/12.37.19.500	302.	0.800	8.03	-0.30	0.200	0/2
229/12.38.21.000	301.	0.801	5.98	-0.21	0.174	5/2
229/12.38.26.000	302.	0.802	6.01	-0.15	0.183	5/2
229/12.38.41.000	301.	0.802	5.99	-0.91	0.182	5/2
229/12.38.45.500	302.	0.803	6.98	-0.09	0.201	5/2
229/12.38.46.000	302.	0.803	7.20	-0.07	0.182	5/2
229/12.38.58.500	290.	0.790	8.06	-0.27	0.208	5/2
229/12.38.59.500	290.	0.790	8.10	-0.33	0.224	5/2
229/12.40.17.500	304.	0.803	5.97	-0.21	0.218	10/2
229/12.40.19.500	304.	0.803	5.97	0.05	0.191	10/2
229/12.40.38.000	307.	0.806	6.95	-0.18	0.213	10/2
229/12.40.38.500	307.	0.806	7.07	-0.04	0.219	10/2
229/12.40.39.000	307.	0.806	7.29	-0.12	0.226	10/2
229/12.40.45.000	302.	0.800	8.02	-0.36	0.320	10/2
229/12.40.46.500	301.	0.798	8.01	0.08	0.333	10/2
229/12.40.52.500	296.	0.792	8.00	-0.12	0.341	10/2
229/12.40.57.500	302.	0.798	8.01	-0.21	0.374	10/2
229/12.42.27.500	305.	0.804	5.52	0.08	0.178	5/2
229/12.42.29.000	305.	0.805	5.66	0.14	0.180	5/2
229/12.42.42.500	306.	0.807	5.94	-0.09	0.188	5/2

Table K-1. Continued.

Flight/Time	QINF, lb/ft^2	MINF	ALPT, deg	BETA, deg	THETA, in.	Camber
229/12.42.44.500	306.	0.806	5.97	0.11	0.185	5/2
229/12.42.52.500	306.	0.808	5.98	-0.88	0.183	5/2
229/12.42.55.500	307.	0.808	6.95	0.02	0.200	5/2
229/12.42.56.000	307.	0.808	7.06	0.08	0.193	5/2
229/12.42.57.500	307.	0.809	7.19	-0.09	0.207	5/2
229/12.43.12.000	304.	0.805	7.97	-0.24	0.241	5/2
229/12.43.14.500	306.	0.807	8.01	-0.07	0.247	5/2
229/12.44.08.500	300.	0.801	4.54	-0.36	0.316	5/6
229/12.44.10.000	300.	0.801	4.50	-0.30	0.293	5/6
229/12.44.12.500	301.	0.802	4.95	-0.27	0.314	5/6
229/12.44.13.500	301.	0.802	4.97	-0.30	0.288	5/6
229/12.44.19.000	299.	0.799	5.02	-0.15	0.342	5/6
229/12.44.30.500	298.	0.797	5.83	-0.56	0.342	5/6
229/12.44.31.000	298.	0.797	5.96	-0.56	0.368	5/6
229/12.44.31.500	298.	0.797	6.11	-0.53	0.444	5/6
229/12.44.38.000	293.	0.791	6.91	-0.47	0.477	5/6
229/12.44.39.000	292.	0.790	6.99	-0.38	0.455	5/6
229/12.44.39.500	292.	0.789	7.04	-0.30	0.494	5/6
229/12.44.52.000	299.	0.799	8.07	-0.30	0.484	5/6
229/12.44.52.500	300.	0.799	8.05	-0.30	0.495	5/6
229/12.44.53.000	300.	0.800	8.04	-0.38	0.484	5/6
229/12.52.48.500	303.	0.802	5.61	0.08	0.175	0/2
229/12.53.53.000	308.	0.807	3.13	0.14	0.146	0/2
229/12.53.53.500	310.	0.809	3.14	-0.04	0.151	0/2
229/12.53.54.000	312.	0.811	3.19	0.08	0.152	0/2
229/12.54.01.500	346.	0.837	8.08	0.11	0.273	0/2
229/13.03.57.500	298.	0.796	5.04	-0.07	0.202	1/4
229/13.03.59.000	297.	0.796	5.04	-0.01	0.202	1/4
229/13.04.07.500	296.	0.795	5.04	-0.21	0.205	1/4
229/13.04.14.000	303.	0.802	3.01	-0.27	0.163	0/2
229/13.04.14.500	305.	0.804	3.00	-0.27	0.141	0/2
229/13.04.17.500	320.	0.818	3.01	0.08	0.157	0/2
229/13.04.18.000	323.	0.820	3.00	-0.18	0.158	0/2
229/13.04.23.500	353.	0.842	7.95	-0.07	0.334	2/6
229/13.04.24.500	353.	0.840	8.56	-0.12	0.463	3/6
229/13.04.25.000	351.	0.837	8.65	-0.27	0.617	3/6
229/13.04.29.000	323.	0.808	8.88	-0.07	0.360	4/7

Table K-1. Continued.

Flight/Time	QINF, lb/ft^2	MINF	ALPT, deg	BETA, deg	THETA, in.	Camber
229/13.04.29.500	318.	0.803	8.96	-0.01	0.430	4/7
229/13.04.30.000	312.	0.797	8.88	-0.18	0.477	4/7
229/13.22.42.000	305.	0.804	5.17	0.25	0.206	1/4
229/13.22.42.500	305.	0.804	5.17	0.22	0.213	1/4
229/13.22.45.000	305.	0.804	5.17	0.08	0.204	1/4
229/13.23.09.000	307.	0.807	5.17	0.02	0.212	1/4
229/13.23.19.500	307.	0.806	6.02	-0.70	0.240	1/5
229/13.23.20.000	306.	0.806	5.81	-0.56	0.262	1/5
229/13.23.20.500	306.	0.806	6.05	-0.53	0.233	1/5
229/13.23.28.000	305.	0.800	7.06	-0.27	0.525	2/6
229/13.23.28.500	306.	0.800	7.12	-0.18	0.561	2/6
229/13.23.30.500	315.	0.806	7.94	0.17	0.669	3/6
229/13.23.31.000	319.	0.810	8.12	0.28	0.567	3/6
229/12.54.02.500	345.	0.835	9.06	0.08	0.441	0/2
229/12.54.03.000	343.	0.832	9.47	0.11	0.537	0/2
229/11.34.59.500	295.	0.847	5.16	0.22	0.188	0/2
229/11.35.01.500	295.	0.847	5.20	0.19	0.190	0/2
229/11.35.09.500	298.	0.849	5.89	0.19	0.188	0/2
229/11.35.36.500	300.	0.852	6.02	-0.04	0.193	0/2
229/11.35.42.000	302.	0.855	7.01	-0.27	0.216	0/2
229/11.35.51.000	293.	0.845	8.01	0.02	0.309	0/2
229/11.35.52.000	295.	0.847	8.01	-0.04	0.324	0/2
229/11.37.34.000	298.	0.844	5.70	0.05	0.191	5/2
229/11.37.40.000	297.	0.844	5.70	-0.01	0.180	5/2
229/11.38.11.500	297.	0.845	6.00	-0.53	0.197	5/2
229/11.38.12.500	298.	0.846	6.02	-0.44	0.207	5/2
229/11.38.18.500	300.	0.849	7.10	-0.33	0.246	5/2
229/11.38.22.000	300.	0.850	8.01	-0.41	0.395	5/2
229/11.38.25.000	299.	0.850	8.01	-0.04	0.386	5/2
229/11.38.28.500	299.	0.850	8.01	-0.18	0.430	5/2
229/11.38.33.500	299.	0.851	9.02	-0.07	0.866	5/2
229/11.35.07.500	297.	0.849	5.72	0.28	0.190	0/2
229/11.35.10.500	298.	0.849	5.71	0.19	0.192	0/2
229/11.35.11.500	298.	0.849	5.72	0.25	0.181	0/2
229/11.35.23.000	296.	0.848	5.52	0.11	0.192	0/2
229/11.35.28.500	297.	0.848	5.49	0.08	0.197	0/2
229/11.35.29.000	297.	0.848	5.49	0.19	0.191	0/2

Table K-1. Continued.

Flight/Time	QINF, lb/ft^2	MINF	ALPT, deg	BETA, deg	THETA, in.	Camber
229/11.35.29.500	297.	0.848	5.49	0.22	0.186	0/2
229/11.35.37.000	300.	0.852	6.02	0.02	0.191	0/2
229/11.35.37.500	301.	0.852	6.07	-0.01	0.188	0/2
229/11.35.41.500	302.	0.855	6.96	-0.33	0.218	0/2
229/11.35.42.500	301.	0.854	7.06	-0.33	0.226	0/2
229/11.35.50.000	292.	0.844	7.92	0.19	0.292	0/2
229/11.35.50.500	293.	0.844	7.92	0.02	0.278	0/2
229/11.36.01.500	310.	0.860	8.58	0.66	0.701	0/2
229/11.36.02.000	312.	0.861	8.67	0.75	0.821	0/2
229/11.36.24.500	314.	0.860	9.15	-0.15	0.915	0/2
229/11.37.33.500	298.	0.845	5.70	0.02	0.218	5/2
229/11.37.37.000	297.	0.844	5.56	0.02	0.192	5/2
229/11.37.38.000	297.	0.844	5.53	0.02	0.187	5/2
229/11.37.38.500	297.	0.844	5.53	-0.04	0.188	5/2
229/11.37.55.000	297.	0.844	5.71	-0.01	0.195	5/2
229/11.37.55.500	297.	0.844	5.71	-0.01	0.192	5/2
229/11.38.10.500	297.	0.845	5.91	-0.64	0.194	5/2
229/11.38.11.000	297.	0.845	5.91	-0.56	0.199	5/2
229/11.38.12.000	297.	0.845	5.96	-0.53	0.200	5/2
229/11.38.13.500	297.	0.845	6.11	-0.38	0.212	5/2
229/11.38.17.500	299.	0.848	6.91	-0.44	0.237	5/2
229/11.38.18.000	300.	0.849	6.98	-0.38	0.233	5/2
229/11.38.19.000	300.	0.850	7.27	-0.44	0.266	5/2
229/11.38.22.500	300.	0.850	8.04	-0.36	0.396	5/2
229/11.38.24.000	299.	0.850	8.04	-0.21	0.429	5/2
229/11.38.25.500	299.	0.850	8.01	-0.07	0.390	5/2
229/11.38.27.000	299.	0.849	8.01	-0.09	0.420	5/2
229/11.38.28.000	298.	0.849	8.01	-0.12	0.387	5/2
229/11.38.31.000	299.	0.851	8.20	-0.09	0.448	5/2
229/11.38.31.500	299.	0.851	8.38	-0.04	0.588	5/2
229/11.38.32.000	299.	0.851	8.78	0.11	0.780	5/2
229/11.38.32.500	299.	0.851	8.85	0.05	0.877	5/2
229/11.38.33.000	299.	0.851	8.90	0.08	0.879	5/2
229/11.38.34.000	299.	0.851	9.08	-0.09	0.865	5/2
229/12.31.28.000	302.	0.902	5.70	-0.12	0.257	0/2
229/12.31.28.500	302.	0.902	5.70	0.28	0.256	0/2
229/12.31.37.000	301.	0.899	5.70	0.22	0.247	0/2

Table K-1. Continued.

Flight/Time	QINF, lb/ft^2	MINF	ALPT, deg	BETA, deg	THETA, in.	Camber
229/12.31.42.000	302.	0.898	6.03	0.11	0.269	0/2
229/12.31.44.500	301.	0.897	6.11	-0.01	0.267	0/2
229/12.31.58.000	300.	0.895	6.70	-0.47	0.310	0/2
229/12.31.59.000	300.	0.895	7.27	-0.33	0.542	0/2
229/12.32.01.000	299.	0.893	7.60	-0.41	0.952	0/2
229/12.32.01.500	298.	0.892	7.58	-0.53	0.938	0/2
229/12.32.03.000	298.	0.892	7.23	-0.15	0.650	0/2
229/12.32.03.500	298.	0.893	7.32	0.05	0.704	0/2
229/12.32.04.000	298.	0.893	7.35	0.31	0.770	0/2
229/12.32.05.500	299.	0.895	7.58	0.25	0.951	0/2
229/12.32.59.000	324.	0.901	6.98	0.05	0.800	0/2
229/12.33.43.500	300.	0.896	6.45	0.05	0.585	5/2
229/12.33.44.000	300.	0.896	6.43	-0.04	0.694	5/2
229/12.33.50.000	300.	0.897	5.83	-0.15	0.355	5/2
229/12.33.50.500	300.	0.897	5.83	-0.21	0.345	5/2
229/12.33.51.500	300.	0.898	5.71	-0.04	0.319	5/2
229/12.33.52.500	301.	0.899	5.83	-0.04	0.367	5/2
229/12.33.53.000	301.	0.899	5.79	-0.01	0.367	5/2
229/12.33.58.000	302.	0.901	6.06	0.02	0.608	5/2
229/12.34.06.000	304.	0.904	6.38	-0.18	0.904	5/2
229/12.34.07.000	304.	0.904	6.33	-0.07	0.894	5/2
229/12.34.07.500	304.	0.904	6.42	-0.36	0.874	5/2
229/12.34.12.500	304.	0.904	6.33	-0.24	0.903	5/2
229/12.34.13.500	304.	0.904	6.32	0.46	0.861	5/2
229/12.34.22.000	303.	0.904	6.33	-0.62	0.767	5/2
229/12.34.22.500	303.	0.904	6.59	-0.47	0.914	5/2
229/12.34.23.000	303.	0.903	6.80	-0.38	0.968	5/2
229/12.31.41.500	302.	0.898	6.00	-0.04	0.276	0/2
229/12.31.45.500	301.	0.896	6.02	-0.27	0.262	0/2
229/12.31.58.500	300.	0.895	6.99	-0.12	0.373	0/2
229/12.33.38.500	299.	0.895	6.06	-0.09	0.399	5/2
229/12.33.39.500	299.	0.896	5.98	-0.21	0.385	5/2
229/12.33.49.500	299.	0.896	6.00	-0.01	0.409	5/2
229/12.34.02.000	304.	0.903	6.02	0.14	0.664	5/2
229/12.34.15.500	304.	0.904	6.00	-0.09	0.623	5/2
229/12.34.23.500	303.	0.903	6.92	-0.44	0.895	5/2
229/12.31.46.000	301.	0.896	5.93	-0.09	0.252	0/2

Table K-1. Continued.

Flight/Time	QINF, lb/ft^2	MINF	ALPT, deg	BETA, deg	THETA, in.	Camber
229/12.31.54.000	301.	0.895	5.97	0.11	0.260	0/2
229/12.31.57.000	300.	0.896	6.02	-0.64	0.245	0/2
229/12.33.57.000	302.	0.901	6.08	-0.15	0.559	5/2
229/12.33.59.000	302.	0.902	5.97	-0.27	0.542	5/2
229/12.34.01.000	303.	0.903	5.97	-0.09	0.576	5/2
229/12.34.01.500	303.	0.903	6.02	0.08	0.607	5/2
229/11.42.02.500	302.	0.951	6.50	0.22	0.594	0/2
229/11.42.03.000	301.	0.950	6.47	0.34	0.608	0/2
229/11.42.03.500	301.	0.950	6.36	0.37	0.621	0/2
229/11.42.04.000	301.	0.950	6.14	0.25	0.611	0/2
229/11.42.04.500	301.	0.950	6.10	0.34	0.646	0/2
229/11.42.05.000	301.	0.950	6.00	0.22	0.628	0/2
229/11.42.05.500	301.	0.950	5.98	0.25	0.627	0/2
229/11.42.06.500	301.	0.950	6.10	0.22	0.624	0/2
229/11.42.07.000	301.	0.950	6.07	0.28	0.624	0/2
229/11.42.15.500	300.	0.949	6.06	0.22	0.689	0/2
229/11.42.16.500	300.	0.949	6.10	0.31	0.697	0/2
229/11.42.28.000	301.	0.950	6.38	-0.15	0.682	0/2
229/11.42.28.500	301.	0.950	6.44	-0.12	0.698	0/2
229/11.42.29.000	301.	0.950	6.61	-0.07	0.701	0/2
229/11.42.29.500	301.	0.949	6.56	-0.01	0.709	0/2
229/11.42.31.000	301.	0.949	6.86	0.05	0.739	0/2
229/11.42.31.500	301.	0.949	6.95	0.05	0.713	0/2
229/11.42.32.000	301.	0.949	7.08	0.05	0.730	0/2
229/11.42.32.500	301.	0.949	7.16	0.02	0.732	0/2
229/14.04.24.500	450.	0.802	3.95	0.34	0.172	0/2
229/14.04.25.000	449.	0.802	4.01	0.22	0.175	0/2
229/14.04.26.000	450.	0.802	4.04	0.25	0.174	0/2
229/14.04.27.000	450.	0.803	4.01	0.28	0.175	0/2
229/14.04.36.500	452.	0.804	4.04	0.37	0.176	0/2
229/14.04.38.000	452.	0.804	3.95	0.31	0.173	0/2
229/14.04.38.500	452.	0.804	4.01	0.34	0.174	0/2
229/14.04.46.500	452.	0.804	4.01	0.31	0.173	0/2
229/14.05.12.000	454.	0.805	4.94	0.02	0.185	0/2
229/14.05.12.500	455.	0.805	5.07	0.25	0.240	0/2
229/14.05.13.000	455.	0.805	5.14	0.11	0.188	0/2
229/14.05.16.000	457.	0.807	6.04	0.05	0.247	0/2

Table K-1. Continued.

Flight/Time	QINF, lb/ft^2	MINF	ALPT, deg	BETA, deg	THETA, in.	Camber
229/14.05.16.500	457.	0.807	6.09	0.05	0.200	0/2
229/14.05.18.000	456.	0.807	6.20	-0.07	0.197	0/2
229/14.05.21.000	455.	0.805	6.96	0.37	0.227	0/2
229/14.05.21.500	455.	0.805	7.02	0.37	0.226	0/2
229/14.05.22.000	455.	0.805	7.08	0.34	0.218	0/2
229/14.05.22.500	455.	0.805	7.01	0.17	0.224	0/2
229/14.05.23.000	455.	0.804	7.01	0.25	0.238	0/2
229/14.05.26.500	460.	0.808	7.93	0.28	0.247	0/2
229/14.05.27.000	460.	0.808	8.02	0.22	0.237	0/2
229/14.05.27.500	460.	0.808	7.97	0.25	0.253	0/2
229/14.05.28.000	461.	0.808	8.01	0.25	0.246	0/2
229/14.05.28.500	461.	0.808	8.02	0.34	0.251	0/2
229/14.05.36.500	472.	0.813	8.52	0.19	0.335	0/2
229/14.05.37.000	473.	0.813	8.52	0.17	0.331	0/2
229/14.05.37.500	473.	0.813	8.48	0.08	0.327	0/2
229/14.05.38.000	473.	0.813	8.63	0.14	0.340	0/2
229/14.05.38.500	473.	0.813	8.75	0.22	0.370	0/2
229/14.05.39.000	472.	0.812	8.75	0.28	0.393	0/2
229/14.05.39.500	472.	0.812	8.93	0.37	0.430	0/2
229/14.05.40.000	471.	0.811	9.14	0.25	0.444	0/2
229/14.05.43.000	462.	0.804	9.97	0.11	0.744	0/2
229/14.05.46.000	455.	0.797	9.97	0.05	0.639	0/2
229/14.07.12.500	451.	0.801	4.18	0.28	0.181	5/2
229/14.07.14.000	450.	0.800	4.19	0.34	0.183	5/2
229/14.07.19.500	450.	0.800	4.19	0.19	0.183	5/2
229/14.07.20.000	450.	0.801	4.18	0.43	0.181	5/2
229/14.07.34.500	452.	0.801	4.18	0.28	0.180	5/2
229/14.07.35.000	452.	0.801	4.19	0.34	0.183	5/2
229/14.07.42.500	454.	0.801	4.84	-0.85	0.192	5/2
229/14.07.43.000	454.	0.801	5.00	-1.25	0.229	5/2
229/14.07.43.500	454.	0.801	5.21	-1.31	0.194	5/2
229/14.07.44.500	454.	0.801	5.83	-0.38	0.200	5/2
229/14.07.45.000	454.	0.801	6.11	0.08	0.203	5/2
229/14.07.45.500	454.	0.801	6.33	0.43	0.217	5/2
229/14.07.46.500	453.	0.800	6.69	0.48	0.211	5/2
229/14.07.47.000	452.	0.799	6.96	0.40	0.233	5/2
229/14.07.47.500	451.	0.798	7.05	0.25	0.263	5/2

Table K-1. Continued.

Flight/Time	QINF, lb/ft^2	MINF	ALPT, deg	BETA, deg	THETA, in.	Camber
229/14.07.48.000	451.	0.798	7.08	0.17	0.225	5/2
229/14.07.50.500	451.	0.798	7.60	0.34	0.232	5/2
229/14.07.51.000	451.	0.798	7.57	0.31	0.240	5/2
229/14.07.51.500	452.	0.798	7.63	0.31	0.226	5/2
229/14.07.52.000	452.	0.798	7.92	0.40	0.273	5/2
229/14.07.52.500	452.	0.798	8.00	0.31	0.271	5/2
229/14.07.53.500	452.	0.798	8.11	0.02	0.283	5/2
229/14.07.54.000	453.	0.798	8.11	0.28	0.274	5/2
229/14.07.57.500	458.	0.802	7.99	0.46	0.244	5/2
229/14.07.58.000	460.	0.803	7.96	0.34	0.264	5/2
229/14.07.58.500	460.	0.804	8.05	0.28	0.261	5/2
229/14.08.05.000	475.	0.813	9.09	0.28	0.445	5/2
229/14.08.05.500	476.	0.813	9.11	0.25	0.473	5/2
229/14.08.06.000	476.	0.814	9.08	0.22	0.461	5/2
229/14.08.14.500	467.	0.802	9.99	0.05	0.681	5/2
230/08.53.04.500	511.	0.780	2.82	0.72	0.201	0/2
230/08.53.06.000	505.	0.778	2.82	0.46	0.194	0/2
230/08.53.06.500	502.	0.777	2.82	0.54	0.190	0/2
230/08.53.09.000	498.	0.775	2.79	0.60	0.154	0/2
230/08.53.09.500	499.	0.775	2.85	0.60	0.160	0/2
230/08.53.15.500	516.	0.785	3.97	0.63	0.215	0/2
230/08.53.16.000	518.	0.786	4.06	0.57	0.175	0/2
230/08.53.17.000	524.	0.789	4.03	0.63	0.214	0/2
230/08.54.44.500	514.	0.783	4.20	0.66	0.188	0/3
230/08.54.46.000	513.	0.783	4.20	0.66	0.185	0/3
230/08.54.47.500	513.	0.783	4.19	0.60	0.185	0/3
230/08.54.48.500	513.	0.783	4.19	0.54	0.183	0/3
230/08.54.54.500	512.	0.782	5.80	0.66	0.214	1/4
230/08.54.55.000	511.	0.781	5.99	0.60	0.253	1/4
230/08.54.55.500	509.	0.780	6.02	0.66	0.223	1/4
230/08.54.56.000	507.	0.779	6.21	0.63	0.229	1/4
230/08.54.57.000	500.	0.775	6.70	0.46	0.258	2/5/4/5
230/08.54.57.500	496.	0.772	6.70	0.51	0.262	2/5
230/08.54.58.000	492.	0.770	6.59	0.60	0.272	2/5
230/08.55.05.500	444.	0.747	2.63	0.69	0.154	0/2
230/08.55.06.500	442.	0.746	2.62	0.77	0.148	0/2
230/08.55.07.500	440.	0.745	2.62	0.75	0.152	0/2

Table K-1. Continued.

Flight/Time	QINF, lb/ft^2	MINF	ALPT, deg	BETA, deg	THETA, in.	Camber
230/08.55.09.500	441.	0.746	3.10	0.77	0.159	0/2
230/08.55.12.000	448.	0.751	3.10	0.80	0.163	0/3/2/2
230/08.55.13.500	455.	0.755	3.10	0.77	0.160	0/2
230/08.55.26.500	551.	0.804	6.29	0.60	0.258	1/4
230/08.55.27.000	552.	0.804	6.28	0.66	0.259	1/5/4/4
230/08.55.27.500	554.	0.805	6.24	0.72	0.266	1/5/4/4
230/08.55.34.000	558.	0.805	6.21	0.63	0.234	1/4
230/08.55.42.000	509.	0.783	2.57	0.57	0.193	0/2
230/08.55.43.000	503.	0.780	2.59	0.66	0.155	0/2
230/08.55.44.000	498.	0.778	2.59	0.75	0.190	0/2
230/08.55.46.000	494.	0.776	2.96	0.69	0.196	0/2
230/08.55.46.500	494.	0.775	3.02	0.66	0.163	0/2
230/08.55.47.000	494.	0.776	3.01	0.75	0.162	0/2
230/08.55.54.000	524.	0.792	3.96	0.66	0.220	0/3
230/08.55.54.500	527.	0.794	3.98	0.66	0.185	0/3
230/08.56.00.000	564.	0.813	4.00	0.60	0.218	0/3
230/08.56.01.500	571.	0.815	3.97	0.63	0.219	0/3
230/09.00.30.000	513.	0.783	4.01	0.66	0.186	0/3
230/09.00.30.500	514.	0.785	4.02	0.57	0.180	0/3
230/09.00.31.000	514.	0.784	3.98	0.75	0.187	0/3
230/09.00.31.500	513.	0.784	4.02	0.46	0.228	0/3
230/09.00.35.000	510.	0.781	4.17	0.63	0.192	0/3
230/09.00.36.500	512.	0.783	4.18	0.63	0.186	0/3
230/09.00.45.500	513.	0.785	7.89	0.34	0.518	3/6
230/09.00.46.000	510.	0.782	8.37	0.34	0.594	3/6
230/09.00.46.500	506.	0.780	7.80	0.43	0.632	3/6
230/09.00.56.000	511.	0.783	8.11	0.86	0.555	3/6
230/09.00.56.500	509.	0.782	8.22	0.75	0.659	3/6
230/09.00.57.000	506.	0.780	8.46	0.69	0.736	3/6
230/09.00.57.500	503.	0.777	8.44	0.60	0.722	3/6
230/09.01.04.500	497.	0.775	5.77	0.98	0.211	1/4
230/09.01.05.000	498.	0.776	6.65	0.83	0.228	1/4
230/09.01.08.500	485.	0.766	9.05	0.14	0.714	4/7
230/09.01.09.000	481.	0.763	9.10	0.25	0.691	4/7
230/09.01.19.000	454.	0.745	9.18	0.63	0.453	4/7
230/09.01.19.500	450.	0.742	8.88	0.75	0.606	4/7
230/09.01.20.000	447.	0.740	8.65	0.83	0.584	4/7

Table K-1. Continued.

Flight/Time	QINF, lb/ft^2	MINF	ALPT, deg	BETA, deg	THETA, in.	Camber
230/09.01.20.500	443.	0.737	8.87	0.83	0.556	4/7
230/09.01.21.000	440.	0.734	9.10	0.80	0.490	4/7
230/09.01.21.500	437.	0.732	8.87	0.86	0.537	4/7
230/09.01.24.000	434.	0.731	4.87	-1.51	0.194	1/4
230/09.01.25.000	435.	0.731	5.02	-0.56	0.193	1/4
230/09.01.28.500	433.	0.732	3.09	0.80	0.164	0/3
230/09.01.29.000	434.	0.733	3.01	0.72	0.167	0/3
230/09.01.29.500	437.	0.715	3.06	0.75	0.161	0/3
230/09.01.35.500	449.	0.746	4.19	0.63	0.180	1/3
230/09.01.36.500	453.	0.749	4.23	0.66	0.179	1/3
230/09.01.37.500	456.	0.751	4.24	0.63	0.182	1/3
230/09.01.39.000	464.	0.757	4.24	0.63	0.184	1/3
230/09.01.39.500	465.	0.758	4.24	0.57	0.185	1/3
230/09.01.41.500	473.	0.764	4.21	1.29	0.182	1/3
230/09.04.26.500	478.	0.767	4.97	1.90	0.199	1/4/3/3
230/09.04.27.000	478.	0.766	4.94	1.53	0.197	1/4/3/3
230/09.04.27.500	478.	0.767	5.00	1.47	0.253	1/4/3/3
230/09.04.35.000	450.	0.747	4.91	0.40	0.206	1/4/5/5
230/09.04.35.500	450.	0.747	5.16	-0.64	0.213	1/4/5/5
230/09.04.36.000	451.	0.748	4.96	-1.11	0.211	1/4/5/5
230/09.07.50.000	519.	0.788	4.12	0.08	0.195	0/3/4/4
230/09.07.50.500	520.	0.789	4.13	-0.38	0.229	0/3/4/4
230/09.07.51.000	521.	0.790	4.22	-0.62	0.194	0/3/4/4
230/09.07.56.500	524.	0.792	6.69	0.46	0.266	2/5/4/5
230/09.07.57.000	523.	0.791	6.75	0.63	0.261	2/5
230/09.08.17.500	254.	0.595	6.13	0.69	0.184	3/5/5/6
230/09.08.18.000	247.	0.589	6.07	0.43	0.191	3/5
230/09.08.18.500	241.	0.583	6.02	0.22	0.174	3/5
230/09.08.19.000	235.	0.578	5.67	0.22	0.164	3/5
230/09.08.28.000	161.	0.500	5.12	0.57	0.117	2/4
230/09.08.28.500	159.	0.498	5.19	0.54	0.110	2/4
230/09.08.29.000	158.	0.496	5.17	0.40	0.111	2/4/4/5
230/09.08.29.500	156.	0.494	5.14	0.25	0.110	2/4/4/5
230/09.08.30.000	154.	0.492	5.18	0.22	0.130	2/4
230/09.08.34.000	148.	0.484	5.54	0.66	0.104	2/5
230/09.08.34.500	147.	0.484	5.53	0.69	0.124	2/5
230/09.08.35.000	147.	0.484	5.49	0.75	0.111	2/5

Table K-1. Continued.

Flight/Time	QINF, lb/ft^2	MINF	ALPT, deg	BETA, deg	THETA, in.	Camber
230/09.08.35.500	148.	0.485	5.54	0.83	0.132	2/5
230/09.11.18.000	524.	0.791	7.33	0.25	0.385	2/5/5/-1
230/09.11.18.500	523.	0.790	7.01	0.31	0.430	2/5/5/-1
230/09.11.19.000	521.	0.789	7.14	0.48	0.410	2/5/5/-1
230/09.11.19.500	519.	0.787	7.32	0.40	0.414	2/5/5/-1
230/08.46.19.000	597.	0.796	3.98	0.51	0.224	0/2
230/08.46.20.500	593.	0.793	4.02	0.60	0.233	0/2
230/08.46.25.500	589.	0.791	4.06	0.43	0.218	0/2
230/08.46.26.500	588.	0.791	4.05	0.48	0.219	0/2
230/08.46.27.500	587.	0.790	4.01	0.60	0.220	0/2
230/08.46.44.500	609.	0.806	3.52	0.28	0.393	5/6
230/08.46.45.000	609.	0.807	3.52	0.31	0.354	5/6
230/08.46.46.500	608.	0.806	3.53	0.22	0.375	5/6
230/08.46.48.000	606.	0.804	3.53	0.40	0.356	5/6
230/08.46.49.500	605.	0.804	3.53	0.34	0.380	5/6
230/08.46.55.000	603.	0.802	3.53	0.40	0.372	5/6
230/08.47.24.000	605.	0.803	4.02	0.63	0.220	0/2
230/08.47.32.500	602.	0.800	4.03	0.75	0.222	0/2
230/08.48.03.500	601.	0.799	4.02	0.66	0.221	0/2
230/08.48.18.000	600.	0.795	5.25	1.15	0.227	0/2
230/08.48.18.500	600.	0.795	4.92	0.98	0.219	0/2
230/08.48.19.000	599.	0.795	4.84	1.00	0.225	0/2
230/08.48.20.000	597.	0.793	5.06	0.83	0.227	0/2
230/08.48.27.500	573.	0.783	5.89	0.80	0.235	0/2
230/08.48.28.000	571.	0.782	5.98	0.95	0.257	0/2
230/08.48.28.500	568.	0.781	5.96	0.92	0.234	0/2
230/08.48.29.000	565.	0.779	5.86	0.75	0.230	0/2
231/13.03.14.500	601.	0.799	4.01	0.48	0.170	0/2
231/13.03.30.000	596.	0.795	4.01	0.48	0.169	0/2
231/13.03.31.500	593.	0.794	4.02	0.40	0.171	0/2
231/13.03.32.500	593.	0.793	4.02	0.40	0.171	0/2
231/13.03.42.000	598.	0.796	3.04	0.48	0.161	0/2
231/13.03.43.000	597.	0.795	3.02	0.48	0.156	0/2
231/13.03.47.000	616.	0.804	3.06	0.31	0.162	0/2
231/13.03.47.500	619.	0.805	3.07	0.37	0.159	0/2
231/13.03.49.500	640.	0.814	5.95	0.51	0.197	0/2
231/13.03.50.000	642.	0.815	6.40	0.40	0.208	0/2

Table K-1. Concluded.

Flight/Time	QINF, lb/ft^2	MINF	ALPT, deg	BETA, deg	THETA, in.	Camber
231/13.03.50.500	643.	0.814	6.86	0.40	0.216	0/2
231/13.03.51.000	641.	0.813	7.20	0.51	0.221	0/2
231/13.03.51.500	639.	0.811	7.43	0.60	0.244	0/2
231/13.03.52.000	635.	0.808	7.69	0.57	0.250	0/2
231/13.03.52.500	628.	0.805	8.08	0.66	0.252	0/2
231/13.03.54.000	605.	0.792	8.66	0.51	0.303	0/2
231/13.03.54.500	597.	0.787	8.59	0.60	0.297	0/2
231/13.03.55.000	587.	0.782	8.75	0.51	0.309	0/2
231/13.05.56.500	600.	0.801	3.98	0.37	0.180	0/3
231/13.06.08.500	605.	0.804	3.98	0.34	0.182	0/3
231/13.06.22.000	600.	0.801	3.98	0.46	0.182	0/3
231/13.06.58.000	599.	0.800	3.01	0.40	0.159	0/2
231/13.06.59.500	603.	0.801	3.03	0.46	0.159	0/2
231/13.07.01.000	613.	0.807	3.03	0.57	0.154	0/2
231/13.07.02.500	625.	0.813	3.46	0.46	0.166	0/2
231/13.07.03.000	629.	0.815	3.95	0.40	0.168	0/2
231/13.07.04.000	635.	0.817	5.04	0.37	0.197	0/3
231/13.07.04.500	637.	0.818	5.50	0.48	0.212	0/3
231/13.07.06.000	635.	0.815	6.39	0.37	0.245	1/4
231/13.07.06.500	632.	0.813	6.62	0.34	0.259	1/4
231/13.07.09.000	609.	0.800	7.01	0.37	0.358	2/5
231/13.07.09.500	601.	0.796	7.04	0.40	0.392	2/5
231/13.07.10.500	581.	0.786	6.92	0.37	0.328	2/5
231/13.07.11.500	558.	0.773	5.05	0.34	0.229	2/5
231/13.08.43.500	609.	0.805	3.91	0.02	0.183	0/3
231/13.08.44.000	609.	0.805	3.99	-0.01	0.183	0/3
231/13.08.44.500	610.	0.806	3.95	-0.04	0.183	0/3
231/13.08.45.000	611.	0.806	4.07	-0.04	0.183	0/3
231/13.08.47.000	613.	0.807	4.66	-0.04	0.199	0/3
231/13.08.47.500	613.	0.807	4.85	-0.09	0.200	0/3
231/13.08.48.000	613.	0.807	5.16	0.05	0.208	0/3
231/13.08.49.500	611.	0.805	5.86	-0.07	0.219	1/4
231/13.08.50.500	610.	0.804	6.04	-0.24	0.237	1/4
231/13.09.02.000	629.	0.801	5.09	0.60	0.210	1/4
231/13.09.02.500	629.	0.800	4.77	0.37	0.206	1/4

Table K-2. Listing of data.

F111/MAW BOUNDARY LAYER DATA, FLT 229										
Time	11:17:26.000		11:17:30.000		11:17:40.000		11:17:49.000		11:18:00.000	
	Camber	0/2	Camber	0/2	Camber	0/2	Camber	0/2	Camber	0/2
	QINF =	303.7	QINF =	305.2	QINF =	305.9	QINF =	306.9	QINF =	308.8
	MINF =	0.605	MINF =	0.606	MINF =	0.606	MINF =	0.607	MINF =	0.609
	ALPT =	6.47	ALPT =	6.51	ALPT =	6.50	ALPT =	6.25	ALPT =	6.28
	BETA =	0.40	BETA =	0.51	BETA =	0.45	BETA =	0.51	BETA =	0.48
	H =	15150.	H =	15141.	H =	15119.	H =	15120.	H =	15111.
	TINF =	17.2	TINF =	17.4	TINF =	17.0	TINF =	18.3	TINF =	17.7
	RNPU =	2.7E+06	RNPU =	2.7E+06	RNPU =	2.7E+06	RNPU =	2.7E+06	RNPU =	2.7E+06
	PSUR =	1168.4	PSUR =	1168.4	PSUR =	1168.4	PSUR =	1169.5	PSUR =	1169.5
	MTOP =	0.62	MTOP =	0.63	MTOP =	0.62	MTOP =	0.62	MTOP =	0.63
Y,in.	U/UTOP	W/UTOP	U/UTOP	W/UTOP	U/UTOP	W/UTOP	U/UTOP	W/UTOP	U/UTOP	W/UTOP
0.240	0.6606	-0.2293	0.6623	-0.2280	0.6642	-0.2088	0.6650	-0.2270	0.6578	-0.2169
0.470	0.7765	-0.0660	0.7732	-0.0581	0.7809	-0.0554	0.7730	-0.0676	0.7713	-0.0674
0.970	0.8983	0.0564	0.8891	0.0567	0.8955	0.0577	0.8953	0.0591	0.8932	0.0575
1.470	0.9877	-0.1889	0.9789	-0.1874	0.9852	-0.1811	0.9896	-0.1821	0.9854	-0.1834
1.960	1.0189	-0.1914	1.0206	-0.1938	1.0266	-0.1879	1.0225	-0.1913	1.0223	-0.1900
2.330	0.9875	-0.1416	0.9895	-0.1427	0.9920	-0.1375	0.9920	-0.1386	0.9924	-0.1375
2.990	0.9956	-0.2241	0.9984	-0.2210	0.9987	-0.2130	1.0016	-0.2166	1.0025	-0.2203
3.490	1.0068	-0.1209	1.0038	-0.1271	1.0065	-0.1288	1.0068	-0.1322	1.0087	-0.1219
3.990	1.0040	-0.1370	0.9988	-0.1479	1.0015	-0.1422	1.0015	-0.1439	1.0045	-0.1356
4.960	1.0000	-0.0893	1.0000	-0.0906	1.0000	-0.0880	1.0000	-0.0880	1.0000	-0.0936

F111/MAW BOUNDARY LAYER DATA, FLT 229										
Time	11:18:00.500		11:18:01.000		11:18:01.500		11:18:02.000		11:18:11.500	
	Camber	0/2	Camber	0/2	Camber	0/2	Camber	0/2	Camber	0/2
	QINF =	308.8	QINF =	309.1	QINF =	309.3	QINF =	309.3	QINF =	310.5
	MINF =	0.609	MINF =	0.609	MINF =	0.610	MINF =	0.610	MINF =	0.611
	ALPT =	6.29	ALPT =	6.28	ALPT =	6.28	ALPT =	6.28	ALPT =	6.28
	BETA =	0.54	BETA =	0.51	BETA =	0.54	BETA =	0.48	BETA =	0.22
	H =	15111.	H =	15111.	H =	15111.	H =	15122.	H =	15124.
	TINF =	18.4	TINF =	18.4	TINF =	18.4	TINF =	18.7	TINF =	18.2
	RNPU =	2.7E+06	RNPU =	2.7E+06	RNPU =	2.7E+06	RNPU =	2.7E+06	RNPU =	2.7E+06
	PSUR =	1168.4	PSUR =	1168.4	PSUR =	1168.4	PSUR =	1168.4	PSUR =	1168.4
	MTOP =	0.63	MTOP =	0.63	MTOP =	0.62	MTOP =	0.63	MTOP =	0.63
Y,in.	U/UTOP	W/UTOP	U/UTOP	W/UTOP	U/UTOP	W/UTOP	U/UTOP	W/UTOP	U/UTOP	W/UTOP
0.240	0.6589	-0.2175	0.6668	-0.2472	0.6729	-0.2297	0.6652	-0.2271	0.6559	-0.2164
0.470	0.7707	-0.0608	0.7707	-0.0594	0.7888	-0.0649	0.7797	-0.0642	0.7671	-0.0577
0.970	0.8975	0.0487	0.8922	0.0560	0.9101	0.0575	0.8937	0.0576	0.8941	0.0565
1.470	0.9839	-0.1809	0.9881	-0.1798	1.0018	-0.1865	0.9921	-0.1816	0.9818	-0.1817
1.960	1.0220	-0.1966	1.0210	-0.1912	1.0349	-0.1954	1.0256	-0.1934	1.0184	-0.1883
2.330	0.9929	-0.1300	0.9937	-0.1376	1.0047	-0.1458	0.9930	-0.1419	0.9887	-0.1326
2.990	1.0011	-0.2200	1.0013	-0.2205	1.0144	-0.2234	1.0015	-0.2214	0.9973	-0.2173
3.490	1.0096	-0.1167	1.0068	-0.1472	1.0073	-0.1450	1.0116	-0.1267	1.0050	-0.1196
3.990	1.0009	-0.1429	0.9972	-0.1360	1.0165	-0.1388	0.9878	-0.1496	0.9960	-0.1403
4.960	1.0000	-0.0898	1.0000	-0.0898	1.0000	-0.0987	1.0000	-0.0918	1.0000	-0.0852

Table K-2. Continued.

F111/MAW BOUNDARY LAYER DATA, FLT 229										
Time	11:18:12.000		11:18:12.500		11:18:17.500		11:18:34.000		11:18:42.000	
	Camber	0/2	Camber	0/2	Camber	0/2	Camber	0/2	Camber	0/2
	QINF =	310.0	QINF =	309.5	QINF =	307.8	QINF =	301.0	QINF =	302.9
	MINF =	0.610	MINF =	0.610	MINF =	0.608	MINF =	0.603	MINF =	0.605
	ALPT =	6.29	ALPT =	6.29	ALPT =	7.03	ALPT =	8.08	ALPT =	8.99
	BETA =	0.02	BETA =	-0.15	BETA =	-0.33	BETA =	-0.10	BETA =	0.14
	H =	15123.	H =	15123.	H =	15132.	H =	15237.	H =	15294.
	TINF =	17.9	TINF =	18.0	TINF =	17.5	TINF =	17.7	TINF =	17.8
	RNPU =	2.7E+06	RNPU =	2.7E+06	RNPU =	2.7E+06	RNPU =	2.7E+06	RNPU =	2.7E+06
	PSUR =	1169.5	PSUR =	1168.4	PSUR =	1166.3	PSUR =	1164.1	PSUR =	1157.6
	MTOP =	0.63	MTOP =	0.63	MTOP =	0.63	MTOP =	0.62	MTOP =	0.63
Y,in.	U/UTOP	W/UTOP	U/UTOP	W/UTOP	U/UTOP	W/UTOP	U/UTOP	W/UTOP	U/UTOP	W/UTOP
0.240	0.6534	-0.2268	0.6555	-0.2275	0.6544	-0.2309	0.6200	-0.2144	0.5384	-0.1904
0.470	0.7684	-0.0578	0.7699	-0.0579	0.7674	-0.0519	0.7306	-0.0352	0.6417	0.0296
0.970	0.8906	0.0591	0.8976	0.0599	0.8830	0.0452	0.8425	0.0304	0.7469	-0.0040
1.470	0.9837	-0.1767	0.9840	-0.1736	0.9798	-0.1746	0.9333	-0.1823	0.8206	-0.1528
1.960	1.0211	-0.1861	1.0214	-0.1854	1.0230	-0.1947	1.0087	-0.1864	0.8866	-0.1492
2.330	0.9915	-0.1318	0.9918	-0.1287	0.9948	-0.1389	0.9913	-0.1467	0.9092	-0.1143
2.990	1.0001	-0.2173	0.9979	-0.2060	1.0016	-0.2166	1.0018	-0.2226	0.9538	-0.2093
3.490	1.0049	-0.1119	1.0062	-0.1216	1.0067	-0.1322	1.0049	-0.1333	0.9799	-0.1247
3.990	1.0009	-0.1318	1.0042	-0.1282	1.0036	-0.1350	1.0046	-0.1541	0.9834	-0.1487
4.960	1.0000	-0.0891	1.0000	-0.0821	1.0000	-0.0880	1.0000	-0.0967	1.0000	-0.0986

F111/MAW BOUNDARY LAYER DATA, FLT 229										
Time	11:18:51.500		11:18:59.000		11:18:03.500		11:18:11.500		11:18:17.500	
	Camber	0/2	Camber	0/2	Camber	0/2	Camber	0/2	Camber	0/2
	QINF =	296.5	QINF =	297.8	QINF =	309.3	QINF =	310.5	QINF =	307.8
	MINF =	0.599	MINF =	0.598	MINF =	0.610	MINF =	0.611	MINF =	0.608
	ALPT =	10.11	ALPT =	10.15	ALPT =	6.28	ALPT =	6.28	ALPT =	7.03
	BETA =	0.34	BETA =	0.17	BETA =	0.48	BETA =	0.22	BETA =	-0.33
	H =	15266.	H =	15068.	H =	15122.	H =	15124.	H =	15132.
	TINF =	18.5	TINF =	19.0	TINF =	18.4	TINF =	18.2	TINF =	17.5
	RNPU =	2.6E+06	RNPU =	2.6E+06	RNPU =	2.7E+06	RNPU =	2.7E+06	RNPU =	2.7E+06
	PSUR =	1164.1	PSUR =	1171.7	PSUR =	1169.5	PSUR =	1168.4	PSUR =	1166.3
	MTOP =	0.54	MTOP =	0.56	MTOP =	0.63	MTOP =	0.63	MTOP =	0.63
Y,in.	U/UTOP	W/UTOP	U/UTOP	W/UTOP	U/UTOP	W/UTOP	U/UTOP	W/UTOP	U/UTOP	W/UTOP
0.240	0.5731	-0.1205	0.5618	-0.1406	0.6626	-0.2262	0.6559	-0.2164	0.6544	-0.2309
0.470	0.7075	0.0844	0.6929	0.0690	0.7702	-0.0673	0.7671	-0.0577	0.7674	-0.0519
0.970	0.7707	-0.0121	0.7629	-0.0128	0.8981	0.0599	0.8941	0.0565	0.8830	0.0452
1.470	0.8159	-0.1287	0.8081	-0.1347	0.9858	-0.1803	0.9818	-0.1817	0.9798	-0.1746
1.960	0.8553	-0.1097	0.8375	-0.1145	1.0211	-0.1906	1.0184	-0.1883	1.0230	-0.1947
2.330	0.8478	-0.0684	0.8398	-0.0779	0.9934	-0.1354	0.9887	-0.1326	0.9948	-0.1389
2.990	0.8811	-0.1956	0.8772	-0.1924	1.0000	-0.2130	0.9973	-0.2173	1.0016	-0.2166
3.490	0.9300	-0.0519	0.9181	-0.0592	1.0073	-0.1217	1.0050	-0.1196	1.0067	-0.1322
3.990	0.9350	-0.0956	0.9453	-0.0983	1.0035	-0.1394	0.9960	-0.1403	1.0036	-0.1350
4.960	1.0000	-0.0774	1.0000	-0.0869	1.0000	-0.0898	1.0000	-0.0852	1.0000	-0.0880

Table K-2. Continued.

F111/MAW BOUNDARY LAYER DATA, FLT 229										
Time	11:18:20.500		11:18:21.000		11:18:24.000		11:18:26.000		11:18:34.000	
	Camber	0/2	Camber	0/2	Camber	0/2	Camber	0/2	Camber	0/2
	QINF =	305.9	QINF =	305.9	QINF =	303.2	QINF =	302.7	QINF =	301.0
	MINF =	0.607	MINF =	0.607	MINF =	0.604	MINF =	0.604	MINF =	0.603
	ALPT =	7.74	ALPT =	8.03	ALPT =	7.83	ALPT =	7.81	ALPT =	8.08
	BETA =	0.34	BETA =	0.25	BETA =	0.28	BETA =	0.25	BETA =	-0.10
	H =	15141.	H =	15141.	H =	15161.	H =	15172.	H =	15237.
	TINF =	17.7	TINF =	17.7	TINF =	17.2	TINF =	17.3	TINF =	17.7
	RNPU =	2.7E+06	RNPU =	2.7E+06	RNPU =	2.7E+06	RNPU =	2.7E+06	RNPU =	2.7E+06
	PSUR =	1165.2	PSUR =	1165.2	PSUR =	1166.3	PSUR =	1160.8	PSUR =	1164.1
	MTOP =	0.63	MTOP =	0.63	MTOP =	0.62	MTOP =	0.63	MTOP =	0.62
Y,in.	U/UTOP	W/UTOP	U/UTOP	W/UTOP	U/UTOP	W/UTOP	U/UTOP	W/UTOP	U/UTOP	W/UTOP
0.240	0.6488	-0.2321	0.6390	-0.2460	0.6506	-0.2327	0.6375	-0.2345	0.6200	-0.2144
0.470	0.7566	-0.0630	0.7373	-0.0517	0.7551	-0.0555	0.7512	-0.0565	0.7306	-0.0352
0.970	0.8693	0.0366	0.8511	0.0276	0.8671	0.0389	0.8678	0.0282	0.8425	0.0304
1.470	0.9631	-0.1917	0.9461	-0.1928	0.9606	-0.1913	0.9538	-0.1879	0.9333	-0.1823
1.960	1.0151	-0.1959	1.0052	-0.1965	1.0104	-0.1980	1.0083	-0.1932	1.0087	-0.1864
2.330	0.9892	-0.1493	0.9913	-0.1528	0.9915	-0.1476	0.9904	-0.1458	0.9913	-0.1467
2.990	0.9993	-0.2301	0.9999	-0.2316	1.0014	-0.2271	0.9940	-0.2364	1.0018	-0.2226
3.490	1.0037	-0.1401	1.0052	-0.1669	1.0088	-0.1371	0.9994	-0.1344	1.0049	-0.1333
3.990	1.0026	-0.1619	1.0032	-0.1537	1.0050	-0.1646	0.9938	-0.1516	1.0046	-0.1541
4.960	1.0000	-0.1020	1.0000	-0.1027	1.0000	-0.1010	1.0000	-0.0981	1.0000	-0.0967

F111/MAW BOUNDARY LAYER DATA, FLT 229										
Time	11:18:36.500		11:18:41.500		11:18:42.000		11:18:42.500		11:18:45.000	
	Camber	0/2	Camber	0/2	Camber	0/2	Camber	0/2	Camber	0/2
	QINF =	301.2	QINF =	302.9	QINF =	302.9	QINF =	303.4	QINF =	302.2
	MINF =	0.603	MINF =	0.605	MINF =	0.605	MINF =	0.606	MINF =	0.605
	ALPT =	8.08	ALPT =	8.95	ALPT =	8.99	ALPT =	9.18	ALPT =	9.50
	BETA =	-0.15	BETA =	0.08	BETA =	0.14	BETA =	0.37	BETA =	0.22
	H =	15259.	H =	15294.	H =	15294.	H =	15294.	H =	15293.
	TINF =	17.7	TINF =	17.4	TINF =	17.8	TINF =	18.1	TINF =	17.9
	RNPU =	2.7E+06	RNPU =	2.7E+06	RNPU =	2.7E+06	RNPU =	2.7E+06	RNPU =	2.7E+06
	PSUR =	1157.6	PSUR =	1163.0	PSUR =	1157.6	PSUR =	1156.5	PSUR =	1158.8
	MTOP =	0.63	MTOP =	0.62	MTOP =	0.63	MTOP =	0.62	MTOP =	0.62
Y,in.	U/UTOP	W/UTOP	U/UTOP	W/UTOP	U/UTOP	W/UTOP	U/UTOP	W/UTOP	U/UTOP	W/UTOP
0.240	0.6372	-0.2247	0.5361	-0.2085	0.5384	-0.1904	0.5393	-0.1751	0.5208	-0.1761
0.470	0.7483	-0.0404	0.6467	0.0057	0.6417	0.0296	0.6616	0.0237	0.6356	0.0259
0.970	0.8626	0.0348	0.7404	0.0127	0.7469	-0.0040	0.7579	-0.0008	0.7278	-0.0035
1.470	0.9520	-0.1827	0.8276	-0.1453	0.8206	-0.1528	0.8325	-0.1777	0.8000	-0.1564
1.960	1.0104	-0.1932	0.8865	-0.1405	0.8866	-0.1492	0.8985	-0.1496	0.8569	-0.1277
2.330	0.9937	-0.1457	0.9145	-0.1214	0.9092	-0.1143	0.9252	-0.1194	0.8789	-0.1078
2.990	1.0010	-0.2205	0.9625	-0.2209	0.9538	-0.2093	0.9642	-0.2232	0.9185	-0.2005
3.490	1.0066	-0.1451	0.9809	-0.1298	0.9799	-0.1247	0.9900	-0.1213	0.9607	-0.1023
3.990	1.0054	-0.1505	0.9696	-0.1579	0.9834	-0.1487	0.9992	-0.1472	0.9574	-0.1328
4.960	1.0000	-0.0960	1.0000	-0.0966	1.0000	-0.0986	1.0000	-0.1081	1.0000	-0.0956

Table K-2. Continued.

F111/MAW BOUNDARY LAYER DATA, FLT 229										
Time	11:18:46.500		11:18:49.000		11:18:51.000		11:20:09.000		11:20:23.500	
	Camber	0/2	Camber	0/2	Camber	0/2	Camber	5/2	Camber	5/2
	QINF =	299.1	QINF =	300.0	QINF =	296.2	QINF =	299.2	QINF =	301.4
	MINF =	0.602	MINF =	0.603	MINF =	0.599	MINF =	0.600	MINF =	0.602
	ALPT =	9.50	ALPT =	10.02	ALPT =	10.03	ALPT =	6.50	ALPT =	6.50
	BETA =	0.14	BETA =	0.05	BETA =	0.22	BETA =	0.34	BETA =	0.34
	H =	15290.	H =	15291.	H =	15277.	H =	15102.	H =	15115.
	TINF =	18.2	TINF =	17.7	TINF =	18.2	TINF =	18.1	TINF =	18.2
	RNPU =	2.6E+06	RNPU =	2.7E+06	RNPU =	2.6E+06	RNPU =	2.7E+06	RNPU =	2.7E+06
	PSUR =	1161.9	PSUR =	1161.9	PSUR =	1163.0	PSUR =	1168.4	PSUR =	1168.4
	MTOP =	0.61	MTOP =	0.58	MTOP =	0.57	MTOP =	0.62	MTOP =	0.63
Y,in.	U/UTOP	W/UTOP	U/UTOP	W/UTOP	U/UTOP	W/UTOP	U/UTOP	W/UTOP	U/UTOP	W/UTOP
0.240	0.5448	-0.1773	0.5501	-0.1914	0.5538	-0.1183	0.6751	-0.2699	0.6611	-0.2182
0.470	0.6601	0.0474	0.6698	0.0731	0.6804	0.0893	0.7889	-0.0547	0.7801	-0.0405
0.970	0.7510	0.0100	0.7483	-0.0020	0.7435	-0.0065	0.8981	0.0549	0.8948	0.0533
1.470	0.8084	-0.1392	0.7922	-0.1332	0.7902	-0.1327	0.9935	-0.1824	0.9769	-0.1859
1.960	0.8675	-0.1289	0.8367	-0.1157	0.8381	-0.1089	1.0217	-0.1932	1.0183	-0.1797
2.330	0.8672	-0.0952	0.8475	-0.0774	0.8417	-0.0771	0.9923	-0.1473	0.9890	-0.1351
2.990	0.9055	-0.1978	0.8875	-0.1909	0.8793	-0.1881	1.0033	-0.2108	0.9930	-0.2212
3.490	0.9401	-0.0794	0.9322	-0.0956	0.9206	-0.0578	1.0133	-0.1454	1.0063	-0.1234
3.990	0.9499	-0.1273	0.9396	-0.1109	0.9219	-0.1103	1.0094	-0.1313	1.0017	-0.1276
4.960	1.0000	-0.0927	1.0000	-0.0835	1.0000	-0.0845	1.0000	-0.0904	1.0000	-0.0893

F111/MAW BOUNDARY LAYER DATA, FLT 229										
Time	11:20:26.000		11:20:34.000		11:20:40.000		11:20:47.000		11:20:55.500	
	Camber	5/2	Camber	5/2	Camber	5/2	Camber	5/2	Camber	5/2
	QINF =	302.1	QINF =	301.6	QINF =	302.3	QINF =	304.2	QINF =	305.6
	MINF =	0.603	MINF =	0.603	MINF =	0.604	MINF =	0.606	MINF =	0.607
	ALPT =	6.50	ALPT =	6.50	ALPT =	6.54	ALPT =	6.50	ALPT =	6.81
	BETA =	0.37	BETA =	0.11	BETA =	0.08	BETA =	0.34	BETA =	-0.10
	H =	15127.	H =	15160.	H =	15182.	H =	15195.	H =	15186.
	TINF =	18.1	TINF =	17.7	TINF =	18.0	TINF =	17.4	TINF =	17.6
	RNPU =	2.7E+06	RNPU =	2.7E+06	RNPU =	2.7E+06	RNPU =	2.7E+06	RNPU =	2.7E+06
	PSUR =	1168.4	PSUR =	1165.3	PSUR =	1165.3	PSUR =	1163.0	PSUR =	1167.3
	MTOP =	0.62	MTOP =	0.62	MTOP =	0.62	MTOP =	0.62	MTOP =	0.62
Y,in.	U/UTOP	W/UTOP	U/UTOP	W/UTOP	U/UTOP	W/UTOP	U/UTOP	W/UTOP	U/UTOP	W/UTOP
0.240	0.6582	-0.1917	0.6649	-0.2434	0.6678	-0.2051	0.6778	-0.2242	0.6621	-0.1943
0.470	0.7787	-0.0585	0.7736	-0.0523	0.7845	-0.0590	0.7787	-0.0460	0.7720	-0.0552
0.970	0.9006	0.0475	0.9024	0.0537	0.9062	0.0581	0.8953	0.0559	0.8949	0.0597
1.470	0.9895	-0.1830	0.9888	-0.1763	0.9907	-0.1809	0.9981	-0.1822	0.9821	-0.1833
1.960	1.0220	-0.1898	1.0196	-0.1892	1.0183	-0.1793	1.0278	-0.1976	1.0161	-0.1860
2.330	0.9935	-0.1390	0.9935	-0.1357	0.9973	-0.1373	1.0016	-0.1435	0.9884	-0.1337
2.990	1.0011	-0.2188	1.0012	-0.2189	0.9990	-0.2254	1.0069	-0.2099	0.9970	-0.2248
3.490	1.0035	-0.0906	1.0079	-0.1531	1.0090	-0.1185	1.0092	-0.1140	1.0027	-0.1180
3.990	1.0032	-0.1534	1.0036	-0.1279	1.0024	-0.1308	1.0038	-0.1349	0.9990	-0.1303
4.960	1.0000	-0.0886	1.0000	-0.0871	1.0000	-0.0834	1.0000	-0.0939	1.0000	-0.0837

Table K-2. Continued.

F111/MAW BOUNDARY LAYER DATA, FLT 229										
Time	11:20:56.000		11:21:09.000		11:21:13.500		11:21:14.000		11:21:15.500	
	Camber	5/2	Camber	5/2	Camber	5/2	Camber	5/2	Camber	5/2
	QINF =	305.6	QINF =	301.2	QINF =	296.6	QINF =	296.4	QINF =	297.3
	MINF =	0.607	MINF =	0.604	MINF =	0.600	MINF =	0.600	MINF =	0.601
	ALPT =	7.08	ALPT =	7.96	ALPT =	8.01	ALPT =	8.08	ALPT =	8.95
	BETA =	0.02	BETA =	-0.33	BETA =	-0.18	BETA =	0.19	BETA =	0.19
	H =	15174.	H =	15303.	H =	15355.	H =	15355.	H =	15344.
	TINF =	17.3	TINF =	17.6	TINF =	17.3	TINF =	17.0	TINF =	17.3
	RNPU =	2.7E+06	RNPU =	2.7E+06	RNPU =	2.6E+06	RNPU =	2.6E+06	RNPU =	2.6E+06
	PSUR =	1161.9	PSUR =	1156.5	PSUR =	1157.6	PSUR =	1152.2	PSUR =	1154.3
	MTOP =	0.63	MTOP =	0.63	MTOP =	0.62	MTOP =	0.63	MTOP =	0.63
Y,in.	U/UTOP	W/UTOP	U/UTOP	W/UTOP	U/UTOP	W/UTOP	U/UTOP	W/UTOP	U/UTOP	W/UTOP
0.240	0.6585	-0.2933	0.6411	-0.2257	0.6516	-0.2377	0.6488	-0.2729	0.6434	-0.2502
0.470	0.7725	-0.0618	0.7516	-0.0588	0.7626	-0.0643	0.7654	-0.0554	0.7492	-0.0710
0.970	0.8916	0.0438	0.8709	0.0343	0.8723	0.0275	0.8750	0.0269	0.8614	0.0074
1.470	0.9819	-0.1866	0.9687	-0.1873	0.9748	-0.1937	0.9720	-0.1870	0.9589	-0.2028
1.960	1.0156	-0.1890	1.0171	-0.1944	1.0236	-0.1996	1.0111	-0.1916	1.0125	-0.2014
2.330	0.9863	-0.1471	0.9906	-0.1499	0.9980	-0.1500	0.9901	-0.1557	0.9901	-0.1601
2.990	0.9954	-0.2269	0.9988	-0.2266	1.0051	-0.2270	0.9979	-0.2337	0.9985	-0.2373
3.490	1.0032	-0.1674	1.0049	-0.1315	1.0083	-0.1397	1.0005	-0.1338	1.0037	-0.1590
3.990	1.0053	-0.1408	1.0175	-0.1344	1.0078	-0.1471	0.9983	-0.1536	1.0002	-0.1591
4.960	1.0000	-0.0942	1.0000	-0.0949	1.0000	-0.0989	1.0000	-0.1018	1.0000	-0.1092

F111/MAW BOUNDARY LAYER DATA, FLT 229										
Time	11:21:16.500		11:21:17.000		11:21:24.000		11:21:24.500		11:21:31.500	
	Camber	5/2	Camber	5/2	Camber	5/2	Camber	5/2	Camber	5/2
	QINF =	299.0	QINF =	300.5	QINF =	304.2	QINF =	303.9	QINF =	301.8
	MINF =	0.602	MINF =	0.603	MINF =	0.606	MINF =	0.606	MINF =	0.602
	ALPT =	8.89	ALPT =	9.19	ALPT =	10.04	ALPT =	10.02	ALPT =	10.10
	BETA =	0.11	BETA =	0.11	BETA =	-0.04	BETA =	-0.01	BETA =	-0.12
	H =	15324.	H =	15325.	H =	15217.	H =	15217.	H =	15127.
	TINF =	17.5	TINF =	17.3	TINF =	17.4	TINF =	17.4	TINF =	17.8
	RNPU =	2.7E+06	RNPU =	2.7E+06	RNPU =	2.7E+06	RNPU =	2.7E+06	RNPU =	2.7E+06
	PSUR =	1154.3	PSUR =	1157.6	PSUR =	1158.6	PSUR =	1160.8	PSUR =	1162.9
	MTOP =	0.62	MTOP =	0.63	MTOP =	0.63	MTOP =	0.63	MTOP =	0.62
Y,in.	U/UTOP	W/UTOP	U/UTOP	W/UTOP	U/UTOP	W/UTOP	U/UTOP	W/UTOP	U/UTOP	W/UTOP
0.240	0.6462	-0.2393	0.6437	-0.2386	0.6248	-0.2454	0.6295	-0.2553	0.6420	-0.2251
0.470	0.7584	-0.0673	0.7387	-0.0700	0.7330	-0.0661	0.7340	-0.0778	0.7461	-0.0571
0.970	0.8631	0.0149	0.8580	0.0053	0.8393	-0.0029	0.8476	-0.0029	0.8549	-0.0071
1.470	0.9659	-0.2064	0.9488	-0.1997	0.9402	-0.2025	0.9397	-0.2013	0.9516	-0.2009
1.960	1.0164	-0.2016	1.0054	-0.2015	1.0027	-0.2014	1.0079	-0.1996	1.0137	-0.2038
2.330	0.9945	-0.1595	0.9856	-0.1577	0.9900	-0.1595	0.9941	-0.1643	1.0058	-0.1610
2.990	1.0055	-0.2473	0.9970	-0.2313	0.9984	-0.2384	1.0032	-0.2385	1.0151	-0.2458
3.490	1.0101	-0.1557	1.0013	-0.1221	1.0005	-0.1599	1.0050	-0.1674	1.0259	-0.1527
3.990	1.0014	-0.1563	1.0147	-0.1424	1.0010	-0.1617	1.0049	-0.1637	1.0188	-0.1569
4.960	1.0000	-0.1091	1.0000	-0.1025	1.0000	-0.1123	1.0000	-0.1115	1.0000	-0.1194

Table K-2. Continued.

F111/MAW BOUNDARY LAYER DATA, FLT 229										
Time	11:21:33.000		11:26:48.500		11:27:10.500		11:27:17.000		11:28:05.500	
	Camber	5/2	Camber	0/2	Camber	0/2	Camber	0/2	Camber	0/2
	QINF =	301.6	QINF =	301.8	QINF =	304.1	QINF =	297.0	QINF =	297.1
	MINF =	0.602	MINF =	0.800	MINF =	0.802	MINF =	0.793	MINF =	0.798
	ALPT =	10.07	ALPT =	5.90	ALPT =	7.12	ALPT =	8.04	ALPT =	8.03
	BETA =	-0.15	BETA =	0.14	BETA =	0.02	BETA =	-0.10	BETA =	-0.27
	H =	15104.	H =	28440.	H =	28388.	H =	28421.	H =	28723.
	TINF =	17.5	TINF =	-36.5	TINF =	-36.1	TINF =	-36.4	TINF =	-38.3
	RNPU =	2.7E+06	RNPU =	2.4E+06	RNPU =	2.4E+06	RNPU =	2.3E+06	RNPU =	2.3E+06
	PSUR =	1168.3	PSUR =	661.6	PSUR =	659.4	PSUR =	658.3	PSUR =	651.7
	MTOP =	0.63	MTOP =	0.81	MTOP =	0.81	MTOP =	0.79	MTOP =	0.79
Y,in.	U/UTOP	W/UTOP	U/UTOP	W/UTOP	U/UTOP	W/UTOP	U/UTOP	W/UTOP	U/UTOP	W/UTOP
0.240	0.6328	-0.2439	0.6132	-0.2222	0.6374	-0.2277	0.6931	-0.2284	0.6866	-0.2256
0.470	0.7333	-0.0466	0.7367	-0.0401	0.7523	-0.0529	0.7893	-0.0544	0.7928	-0.0489
0.970	0.8416	-0.0012	0.8701	0.0727	0.8688	0.0543	0.8598	0.0436	0.8693	0.0437
1.470	0.9431	-0.1995	0.9772	-0.1812	0.9474	-0.2071	0.9286	-0.1996	0.9307	-0.1971
1.960	1.0098	-0.1945	1.0198	-0.1918	1.0037	-0.2034	0.9688	-0.1929	0.9659	-0.1927
2.330	0.9863	-0.1646	0.9921	-0.1409	0.9927	-0.1540	0.9723	-0.1612	0.9656	-0.1532
2.990	1.0000	-0.2325	1.0004	-0.2230	1.0012	-0.2357	0.9999	-0.2398	0.9974	-0.2492
3.490	1.0070	-0.1601	1.0067	-0.1327	1.0060	-0.1504	1.0131	-0.1569	1.0201	-0.1938
3.990	0.9957	-0.1615	0.9973	-0.1397	1.0028	-0.1542	1.0015	-0.1580	1.0069	-0.1656
4.960	1.0000	-0.1084	1.0000	-0.0903	1.0000	-0.1033	1.0000	-0.1086	1.0000	-0.1072

F111/MAW BOUNDARY LAYER DATA, FLT 229										
Time	11:31:02.500		11:31:08.000		11:31:11.500		11:31:13.000		11:31:17.500	
	Camber	5/2	Camber	5/2	Camber	5/2	Camber	5/2	Camber	5/2
	QINF =	300.8	QINF =	299.2	QINF =	298.1	QINF =	297.2	QINF =	294.9
	MINF =	0.801	MINF =	0.800	MINF =	0.799	MINF =	0.798	MINF =	0.796
	ALPT =	5.97	ALPT =	6.06	ALPT =	7.03	ALPT =	7.20	ALPT =	8.05
	BETA =	0.02	BETA =	-0.85	BETA =	-0.04	BETA =	0.14	BETA =	-0.07
	H =	28606.	H =	28649.	H =	28658.	H =	28668.	H =	28753.
	TINF =	-37.4	TINF =	-37.2	TINF =	-37.0	TINF =	-37.2	TINF =	-37.4
	RNPU =	2.4E+06	RNPU =	2.3E+06	RNPU =	2.3E+06	RNPU =	2.3E+06	RNPU =	2.3E+06
	PSUR =	658.2	PSUR =	657.1	PSUR =	655.0	PSUR =	653.8	PSUR =	647.2
	MTOP =	0.80	MTOP =	0.80	MTOP =	0.80	MTOP =	0.80	MTOP =	0.79
Y,in.	U/UTOP	W/UTOP	U/UTOP	W/UTOP	U/UTOP	W/UTOP	U/UTOP	W/UTOP	U/UTOP	W/UTOP
0.240	0.6380	-0.2081	0.6234	-0.1956	0.6586	-0.2330	0.6699	-0.3262	0.6860	-0.2385
0.470	0.7595	-0.0458	0.7480	-0.0246	0.7677	-0.0553	0.7798	-0.0514	0.7883	-0.0568
0.970	0.8757	0.0725	0.8734	0.0766	0.8652	0.0565	0.8641	0.0620	0.8657	0.0408
1.470	0.9635	-0.1755	0.9577	-0.1684	0.9369	-0.1838	0.9338	-0.1968	0.9348	-0.1909
1.960	1.0115	-0.1975	1.0109	-0.1846	0.9895	-0.1913	0.9852	-0.1928	0.9768	-0.1939
2.330	0.9960	-0.1488	0.9939	-0.1263	0.9899	-0.1512	0.9876	-0.1563	0.9799	-0.1613
2.990	1.0025	-0.2287	0.9994	-0.2123	1.0052	-0.2375	1.0043	-0.2391	1.0123	-0.2492
3.490	1.0187	-0.1196	1.0076	-0.0863	1.0078	-0.1333	1.0116	-0.1527	1.0306	-0.1455
3.990	1.0023	-0.1395	1.0192	-0.1235	1.0089	-0.1480	0.9973	-0.1543	1.0153	-0.1604
4.960	1.0000	-0.0925	1.0000	-0.0773	1.0000	-0.0991	1.0000	-0.1007	1.0000	-0.1071

Table K-2. Continued.

F111/MAW BOUNDARY LAYER DATA, FLT 229										
Time	11:31:22.500		11:31:25.500		11:31:34.500		11:31:42.500		11:31:43.500	
	Camber	5/2	Camber	5/2	Camber	5/2	Camber	5/2	Camber	5/2
	QINF =	288.0	QINF =	287.8	QINF =	297.1	QINF =	302.2	QINF =	303.3
	MINF =	0.789	MINF =	0.790	MINF =	0.805	MINF =	0.809	MINF =	0.810
	ALPT =	8.05	ALPT =	8.05	ALPT =	9.16	ALPT =	10.09	ALPT =	10.04
	BETA =	-0.10	BETA =	-0.30	BETA =	0.02	BETA =	-0.18	BETA =	-0.18
	H =	28888.	H =	28966.	H =	29083.	H =	28946.	H =	28903.
	TINF =	-37.9	TINF =	-38.3	TINF =	-39.1	TINF =	-38.3	TINF =	-38.4
	RNPU =	2.3E+06	RNPU =	2.3E+06	RNPU =	2.3E+06	RNPU =	2.3E+06	RNPU =	2.4E+06
	PSUR =	646.1	PSUR =	643.9	PSUR =	641.7	PSUR =	656.0	PSUR =	634.1
	MTOP =	0.78	MTOP =	0.79	MTOP =	0.81	MTOP =	0.73	MTOP =	0.67
Y,in.	U/UTOP	W/UTOP	U/UTOP	W/UTOP	U/UTOP	W/UTOP	U/UTOP	W/UTOP	U/UTOP	W/UTOP
0.240	0.6826	-0.2322	0.6810	-0.2129	0.6380	-0.1891	0.6487	-0.0081	0.7371	0.3999
0.470	0.7966	-0.0474	0.7912	-0.0390	0.7282	-0.0209	0.7714	0.0992	0.6951	0.2528
0.970	0.8681	0.0410	0.8633	0.0448	0.8057	0.0247	0.8043	0.0491	0.7518	-0.0045
1.470	0.9326	-0.1968	0.9330	-0.1888	0.8373	-0.1768	0.8448	-0.0987	0.7536	-0.0991
1.960	0.9730	-0.1898	0.9765	-0.1899	0.8701	-0.1581	0.8915	-0.1036	0.7401	-0.0542
2.330	0.9763	-0.1618	0.9731	-0.1493	0.8818	-0.1621	0.8631	-0.0061	0.7972	-0.1064
2.990	1.0087	-0.2497	1.0125	-0.2426	0.9218	-0.2266	0.9027	-0.1823	0.8377	-0.2071
3.490	1.0274	-0.1513	1.0217	-0.1578	0.9658	-0.1682	0.9616	-0.0505	0.9074	-0.0019
3.990	1.0109	-0.1631	1.0064	-0.1653	0.9807	-0.1648	0.9781	-0.0998	0.8723	-0.0725
4.960	1.0000	-0.1107	1.0000	-0.1014	1.0000	-0.1167	1.0000	-0.0650	1.0000	-0.0792

F111/MAW BOUNDARY LAYER DATA, FLT 229										
Time	12:37:03.000		12:37:18.500		12:38:26.500		12:38:35.500		12:38:57.000	
	Camber	0/2	Camber	0/2	Camber	5/2	Camber	5/2	Camber	5/2
	QINF =	300.6	QINF =	301.9	QINF =	302.4	QINF =	301.7	QINF =	291.4
	MINF =	0.801	MINF =	0.800	MINF =	0.803	MINF =	0.802	MINF =	0.791
	ALPT =	6.07	ALPT =	8.01	ALPT =	6.01	ALPT =	5.98	ALPT =	7.93
	BETA =	-0.67	BETA =	-0.07	BETA =	-0.15	BETA =	-0.30	BETA =	-0.18
	H =	28584.	H =	28474.	H =	28575.	H =	28574.	H =	28770.
	TINF =	-38.3	TINF =	-37.9	TINF =	-37.2	TINF =	-36.5	TINF =	-37.5
	RNPU =	2.4E+06	RNPU =	2.4E+06	RNPU =	2.4E+06	RNPU =	2.3E+06	RNPU =	2.3E+06
	PSUR =	656.0	PSUR =	656.0	PSUR =	657.1	PSUR =	656.0	PSUR =	648.3
	MTOP =	0.82	MTOP =	0.80	MTOP =	0.81	MTOP =	0.81	MTOP =	0.79
Y,in.	U/UTOP	W/UTOP	U/UTOP	W/UTOP	U/UTOP	W/UTOP	U/UTOP	W/UTOP	U/UTOP	W/UTOP
0.240	0.5940	-0.2062	0.6811	-0.2282	0.6347	-0.2322	0.6413	-0.2359	0.6841	-0.2494
0.470	0.7365	0.0026	0.8068	-0.0354	0.7616	-0.0144	0.7696	-0.0145	0.7977	-0.0219
0.970	0.8834	0.0876	0.8861	0.0466	0.8779	0.0710	0.8933	0.0791	0.8738	0.0449
1.470	0.9771	-0.1781	0.9536	-0.2043	0.9638	-0.1849	0.9670	-0.1938	0.9341	-0.2145
1.960	1.0205	-0.1892	0.9806	-0.1923	1.0128	-0.1915	1.0195	-0.1924	0.9746	-0.1812
2.330	0.9882	-0.1366	0.9783	-0.1648	0.9927	-0.1469	1.0011	-0.1433	0.9735	-0.1733
2.990	0.9898	-0.2308	0.9999	-0.2635	0.9941	-0.2332	1.0011	-0.2378	1.0037	-0.2622
3.490	1.0063	-0.1145	1.0190	-0.1556	1.0093	-0.1295	1.0137	-0.1277	1.0181	-0.1541
3.990	0.9957	-0.1258	1.0011	-0.1603	1.0124	-0.1299	1.0060	-0.1380	1.0042	-0.1510
4.960	1.0000	-0.0845	1.0000	-0.1157	1.0000	-0.0935	1.0000	-0.0978	1.0000	-0.1011

Table K-2. Continued.

F111/MAW BOUNDARY LAYER DATA, FLT 229										
Time	12:40:24.500		12:40:27.500		12:41:01.500		12:41:02.500		12:41:03.000	
	Camber	10/2	Camber	10/2	Camber	10/2	Camber	10/2	Camber	10/2
	QINF =	305.2	QINF =	305.2	QINF =	311.9	QINF =	314.5	QINF =	315.9
	MINF =	0.805	MINF =	0.805	MINF =	0.809	MINF =	0.811	MINF =	0.812
	ALPT =	5.97	ALPT =	5.93	ALPT =	8.42	ALPT =	8.43	ALPT =	8.43
	BETA =	0.11	BETA =	-0.07	BETA =	-0.21	BETA =	-0.01	BETA =	0.02
	H =	28468.	H =	28479.	H =	28209.	H =	28158.	H =	28137.
	TINF =	-35.5	TINF =	-35.5	TINF =	-34.7	TINF =	-34.6	TINF =	-34.1
	RNPU =	2.4E+06	RNPU =	2.4E+06	RNPU =	2.4E+06	RNPU =	2.4E+06	RNPU =	2.4E+06
	PSUR =	660.4	PSUR =	660.4	PSUR =	673.8	PSUR =	674.9	PSUR =	674.9
	MTOP =	0.81	MTOP =	0.81	MTOP =	0.81	MTOP =	0.81	MTOP =	0.81
Y,in.	U/UTOP	W/UTOP	U/UTOP	W/UTOP	U/UTOP	W/UTOP	U/UTOP	W/UTOP	U/UTOP	W/UTOP
0.240	0.6594	-0.1921	0.6590	-0.2029	0.6559	-0.1880	0.6433	-0.2091	0.6436	-0.1738
0.470	0.7813	-0.0162	0.7858	-0.0060	0.7610	0.0051	0.7510	-0.0057	0.7426	-0.0060
0.970	0.8821	0.0825	0.8867	0.0791	0.8072	0.0362	0.8006	0.0328	0.8000	0.0370
1.470	0.9352	-0.1855	0.9510	-0.1777	0.8421	-0.2072	0.8449	-0.1938	0.8373	-0.1878
1.960	0.9838	-0.1804	0.9887	-0.1779	0.8896	-0.1606	0.8726	-0.1621	0.8866	-0.1544
2.330	0.9803	-0.1430	0.9869	-0.1403	0.8936	-0.1525	0.8858	-0.1422	0.8893	-0.1534
2.990	0.9889	-0.2330	0.9956	-0.2332	0.9332	-0.2418	0.9259	-0.2386	0.9263	-0.2467
3.490	0.9984	-0.1270	1.0102	-0.1199	0.9774	-0.1258	0.9748	-0.1489	0.9672	-0.1508
3.990	0.9747	-0.1407	0.9966	-0.1358	0.9828	-0.1754	0.9845	-0.1574	0.9784	-0.1611
4.960	1.0000	-0.0884	1.0000	-0.0909	1.0000	-0.1101	1.0000	-0.1161	1.0000	-0.1123

F111/MAW BOUNDARY LAYER DATA, FLT 229										
Time	12:41:03.500		12:43:14.000		12:44:02.500		12:44:04.500		12:44:14.500	
	Camber	10/2	Camber	5/2	Camber	5/6	Camber	5/6	Camber	5/6
	QINF =	317.0	QINF =	305.6	QINF =	301.0	QINF =	300.3	QINF =	300.6
	MINF =	0.814	MINF =	0.806	MINF =	0.802	MINF =	0.801	MINF =	0.801
	ALPT =	8.42	ALPT =	8.01	ALPT =	5.01	ALPT =	5.01	ALPT =	5.10
	BETA =	-0.04	BETA =	-0.15	BETA =	-0.24	BETA =	-0.33	BETA =	-0.30
	H =	28117.	H =	28536.	H =	28640.	H =	28639.	H =	28628.
	TINF =	-34.6	TINF =	-37.3	TINF =	-37.5	TINF =	-37.4	TINF =	-37.0
	RNPU =	2.4E+06	RNPU =	2.4E+06	RNPU =	2.4E+06	RNPU =	2.3E+06	RNPU =	2.3E+06
	PSUR =	673.8	PSUR =	657.2	PSUR =	603.3	PSUR =	617.6	PSUR =	612.1
	MTOP =	0.82	MTOP =	0.81	MTOP =	0.89	MTOP =	0.86	MTOP =	0.87
Y,in.	U/UTOP	W/UTOP	U/UTOP	W/UTOP	U/UTOP	W/UTOP	U/UTOP	W/UTOP	U/UTOP	W/UTOP
0.240	0.6477	-0.1825	0.6801	-0.2283	0.6550	-0.2039	0.6300	-0.1994	0.6414	-0.1927
0.470	0.7417	0.0055	0.7939	-0.0278	0.7602	-0.0067	0.7516	0.0049	0.7565	-0.0137
0.970	0.7921	0.0377	0.8606	0.0483	0.8395	0.0416	0.8372	0.0465	0.8338	0.0431
1.470	0.8373	-0.1824	0.9088	-0.2183	0.8896	-0.1746	0.8963	-0.1732	0.9011	-0.1653
1.960	0.8770	-0.1560	0.9582	-0.1831	0.9205	-0.1528	0.9468	-0.1503	0.9339	-0.1481
2.330	0.8831	-0.1446	0.9596	-0.1601	0.9263	-0.1443	0.9409	-0.1377	0.9324	-0.1425
2.990	0.9230	-0.2477	0.9907	-0.2593	0.9429	-0.2337	0.9543	-0.2312	0.9497	-0.2295
3.490	0.9690	-0.1504	1.0223	-0.1658	0.9781	-0.1545	0.9819	-0.1482	0.9778	-0.1542
3.990	0.9687	-0.1715	1.0071	-0.1572	0.9761	-0.1738	0.9962	-0.1633	0.9773	-0.1774
4.960	1.0000	-0.1107	1.0000	-0.1064	1.0000	-0.1209	1.0000	-0.1258	1.0000	-0.1219

Table K-2. Continued.

F111/MAW BOUNDARY LAYER DATA, FLT 229										
Time	11:28:13.000		11:28:13.500		11:28:20.000		11:28:24.500		11:31:34.000	
	Camber	0/2	Camber	0/2	Camber	0/2	Camber	0/2	Camber	5/2
	QINF =	298.6	QINF =	298.8	QINF =	297.6	QINF =	298.3	QINF =	296.5
	MINF =	0.803	MINF =	0.803	MINF =	0.803	MINF =	0.803	MINF =	0.804
	ALPT =	8.98	ALPT =	9.04	ALPT =	9.98	ALPT =	9.97	ALPT =	8.91
	BETA =	0.08	BETA =	0.05	BETA =	0.14	BETA =	0.19	BETA =	0.05
	H =	28850.	H =	28850.	H =	28915.	H =	28905.	H =	29082.
	TINF =	-38.5	TINF =	-38.6	TINF =	-39.2	TINF =	-39.3	TINF =	-39.0
	RNPU =	2.3E+06	RNPU =	2.3E+06	RNPU =	2.3E+06	RNPU =	2.3E+06	RNPU =	2.3E+06
	PSUR =	652.8	PSUR =	648.3	PSUR =	646.2	PSUR =	639.5	PSUR =	647.2
	MTOP =	0.79	MTOP =	0.80	MTOP =	0.63	MTOP =	0.66	MTOP =	0.81
Y,in.	U/UTOP	W/UTOP	U/UTOP	W/UTOP	U/UTOP	W/UTOP	U/UTOP	W/UTOP	U/UTOP	W/UTOP
0.240	0.6571	-0.2443	0.6736	-0.1968	0.7020	-0.6099	0.6120	0.2405	0.6585	-0.2026
0.470	0.7592	-0.0341	0.7680	-0.0225	0.7452	0.2683	0.7573	0.2111	0.7494	-0.0287
0.970	0.8200	0.0301	0.8120	0.0264	0.7685	0.0606	0.8017	0.0778	0.8091	0.0284
1.470	0.8602	-0.1866	0.8606	-0.1946	0.7793	-0.0442	0.8153	-0.0767	0.8559	-0.1868
1.960	0.9012	-0.1757	0.8970	-0.1579	0.8178	-0.0484	0.8658	-0.0652	0.8912	-0.1667
2.330	0.8919	-0.1421	0.8919	-0.1348	0.8247	-0.0222	0.8496	-0.0165	0.8972	-0.1502
2.990	0.9341	-0.2470	0.9319	-0.2332	0.8576	-0.1752	0.8815	-0.1673	0.9391	-0.2364
3.490	0.9692	-0.1425	0.9590	-0.1582	0.9416	0.0172	0.9433	-0.0132	0.9730	-0.1403
3.990	0.9805	-0.1645	0.9988	-0.1630	0.9118	-0.0512	0.9356	-0.0823	1.0058	-0.1602
4.960	1.0000	-0.1153	1.0000	-0.1129	1.0000	-0.0726	1.0000	-0.0622	1.0000	-0.1124

F111/MAW BOUNDARY LAYER DATA, FLT 229										
Time	11:31:44.000		11:31:45.500		11:31:50.000		11:31:16.500		11:31:21.000	
	Camber	5/2	Camber	5/2	Camber	5/2	Camber	5/2	Camber	5/2
	QINF =	304.1	QINF =	306.6	QINF =	314.1	QINF =	296.2	QINF =	289.3
	MINF =	0.810	MINF =	0.812	MINF =	0.817	MINF =	0.797	MINF =	0.790
	ALPT =	9.98	ALPT =	10.04	ALPT =	10.03	ALPT =	7.94	ALPT =	7.98
	BETA =	-0.10	BETA =	0.37	BETA =	-0.38	BETA =	-0.24	BETA =	-0.12
	H =	28870.	H =	28784.	H =	28494.	H =	28722.	H =	28845.
	TINF =	-38.1	TINF =	-37.7	TINF =	-36.6	TINF =	-37.5	TINF =	-37.7
	RNPU =	2.4E+06	RNPU =	2.4E+06	RNPU =	2.4E+06	RNPU =	2.3E+06	RNPU =	2.3E+06
	PSUR =	645.1	PSUR =	630.8	PSUR =	632.0	PSUR =	653.8	PSUR =	648.3
	MTOP =	0.54	MTOP =	0.51	MTOP =	0.60	MTOP =	0.80	MTOP =	0.79
Y,in.	U/UTOP	W/UTOP	U/UTOP	W/UTOP	U/UTOP	W/UTOP	U/UTOP	W/UTOP	U/UTOP	W/UTOP
0.240	0.4646	-0.1815	0.5378	-0.0957	0.4551	-0.0734	0.6676	-0.2687	0.6797	-0.2963
0.470	0.7196	0.3114	0.7798	0.3807	0.7003	0.2365	0.7749	-0.0545	0.7870	-0.0468
0.970	0.6987	-0.2270	0.8778	-0.8296	0.7386	-0.7369	0.8585	0.0370	0.8646	0.0292
1.470	0.7032	-0.1526	0.8050	-0.2135	0.6949	-0.1596	0.9159	-0.1829	0.9393	-0.1848
1.960	0.7573	-0.0062	0.8121	-0.0129	0.7048	0.0009	0.9630	-0.1794	0.9794	-0.2002
2.330	0.7484	-0.0632	0.7746	-0.0312	0.7261	-0.1401	0.9565	-0.1726	0.9771	-0.1556
2.990	0.7803	-0.1898	0.8024	-0.2914	0.7553	-0.2048	0.9973	-0.2471	1.0049	-0.2441
3.490	0.9033	0.0437	0.9273	0.0709	0.8589	0.0403	1.0138	-0.1617	1.0135	-0.1548
3.990	0.8264	-0.1229	0.8312	-0.0761	0.8189	-0.0731	1.0038	-0.1575	1.0069	-0.1589
4.960	1.0000	-0.0756	1.0000	-0.0790	1.0000	-0.0831	1.0000	-0.0979	1.0000	-0.1029

Table K-2. Continued.

F111/MAW BOUNDARY LAYER DATA, FLT 229										
Time	11:31:21.500		11:31:23.000		11:31:26.000		11:31:33.500		11:31:35.000	
	Camber	5/2	Camber	5/2	Camber	5/2	Camber	5/2	Camber	5/2
	QINF =	288.9	QINF =	287.9	QINF =	288.0	QINF =	295.6	QINF =	297.8
	MINF =	0.790	MINF =	0.789	MINF =	0.791	MINF =	0.803	MINF =	0.806
	ALPT =	8.04	ALPT =	8.07	ALPT =	8.04	ALPT =	8.75	ALPT =	9.22
	BETA =	-0.15	BETA =	-0.12	BETA =	-0.47	BETA =	0.14	BETA =	0.11
	H =	28856.	H =	28899.	H =	28989.	H =	29080.	H =	29073.
	TINF =	-37.6	TINF =	-38.2	TINF =	-37.8	TINF =	-39.5	TINF =	-38.9
	RNPU =	2.3E+06	RNPU =	2.3E+06	RNPU =	2.3E+06	RNPU =	2.3E+06	RNPU =	2.3E+06
	PSUR =	647.2	PSUR =	647.2	PSUR =	642.8	PSUR =	646.1	PSUR =	649.4
	MTOP =	0.79	MTOP =	0.79	MTOP =	0.79	MTOP =	0.81	MTOP =	0.79
Y,in.	U/UTOP	W/UTOP	U/UTOP	W/UTOP	U/UTOP	W/UTOP	U/UTOP	W/UTOP	U/UTOP	W/UTOP
0.240	0.6813	-0.2410	0.6747	-0.2088	0.6628	-0.2203	0.6666	-0.2157	0.6194	-0.1509
0.470	0.7828	-0.0498	0.7832	-0.0398	0.7753	-0.0420	0.7501	-0.0617	0.7205	0.0173
0.970	0.8687	0.0409	0.8559	0.0425	0.8631	0.0445	0.8154	0.0319	0.7703	0.0167
1.470	0.9290	-0.1961	0.9183	-0.2058	0.9357	-0.1826	0.8696	-0.1926	0.8136	-0.1739
1.960	0.9762	-0.1870	0.9645	-0.1909	0.9720	-0.1859	0.9062	-0.1692	0.8483	-0.1427
2.330	0.9782	-0.1627	0.9734	-0.1570	0.9757	-0.1558	0.9093	-0.1527	0.8550	-0.1354
2.990	1.0092	-0.2522	1.0047	-0.2403	1.0076	-0.2471	0.9453	-0.2487	0.9002	-0.2258
3.490	1.0195	-0.1605	1.0169	-0.1440	1.0136	-0.1355	0.9860	-0.1774	0.9512	-0.1213
3.990	1.0128	-0.1574	1.0003	-0.1622	1.0042	-0.1811	0.9904	-0.1676	0.9729	-0.1426
4.960	1.0000	-0.1045	1.0000	-0.1110	1.0000	-0.0980	1.0000	-0.1159	1.0000	-0.1064

F111/MAW BOUNDARY LAYER DATA, FLT 229										
Time	11:31:41.500		11:31:44.500		11:31:45.000		11:31:46.000		12:40:44.500	
	Camber	5/2	Camber	5/2	Camber	5/2	Camber	5/2	Camber	10/2
	QINF =	301.7	QINF =	304.8	QINF =	305.7	QINF =	307.6	QINF =	303.1
	MINF =	0.809	MINF =	0.811	MINF =	0.812	MINF =	0.813	MINF =	0.801
	ALPT =	9.97	ALPT =	10.03	ALPT =	10.05	ALPT =	9.98	ALPT =	7.91
	BETA =	-0.01	BETA =	-0.04	BETA =	0.19	BETA =	0.37	BETA =	-0.36
	H =	28978.	H =	28849.	H =	28817.	H =	28752.	H =	28431.
	TINF =	-38.6	TINF =	-37.9	TINF =	-38.0	TINF =	-37.8	TINF =	-35.4
	RNPU =	2.3E+06	RNPU =	2.4E+06	RNPU =	2.4E+06	RNPU =	2.4E+06	RNPU =	2.4E+06
	PSUR =	638.4	PSUR =	634.1	PSUR =	636.3	PSUR =	631.9	PSUR =	661.6
	MTOP =	0.63	MTOP =	0.52	MTOP =	0.45	MTOP =	0.50	MTOP =	0.81
Y,in.	U/UTOP	W/UTOP	U/UTOP	W/UTOP	U/UTOP	W/UTOP	U/UTOP	W/UTOP	U/UTOP	W/UTOP
0.240	0.4786	-0.3262	0.4785	-0.1253	0.4782	-0.0415	0.5336	-0.1243	0.6831	-0.2340
0.470	0.6817	0.2734	0.7476	0.3681	0.8040	0.4329	0.7946	0.3677	0.7794	-0.0183
0.970	0.7102	-0.0069	0.7685	-0.2331	0.5427	0.1952	0.8576	-0.7605	0.8463	0.0371
1.470	0.7093	-0.1135	0.7422	-0.1509	0.7859	-0.1962	0.8073	-0.1689	0.8967	-0.1856
1.960	0.7460	-0.0344	0.7654	0.0592	0.7821	-0.0140	0.8132	-0.0016	0.9350	-0.1459
2.330	0.7549	-0.0476	0.7473	-0.0253	0.7671	-0.0565	0.7727	-0.0182	0.9214	-0.1565
2.990	0.7937	-0.1743	0.7925	-0.4382	0.8368	-0.8186	0.8039	-0.4281	0.9510	-0.2396
3.490	0.8941	0.0085	0.9443	0.0463	0.9643	0.1017	0.9345	0.0857	0.9922	-0.1363
3.990	0.8697	-0.0962	0.7968	-0.0773	0.8688	-0.0433	0.8552	-0.0773	0.9970	-0.1682
4.960	1.0000	-0.0804	1.0000	-0.0682	1.0000	-0.0782	1.0000	-0.0754	1.0000	-0.1017

Table K-2. Continued.

F111/MAW BOUNDARY LAYER DATA, FLT 229										
Time	12:40:45.500		12:40:46.000		12:40:50.500		12:40:53.000		12:40:55.000	
	Camber	10/2	Camber	10/2	Camber	10/2	Camber	10/2	Camber	10/2
	QINF =	301.8	QINF =	301.1	QINF =	296.4	QINF =	295.8	QINF =	296.9
	MINF =	0.800	MINF =	0.799	MINF =	0.793	MINF =	0.792	MINF =	0.793
	ALPT =	8.06	ALPT =	8.06	ALPT =	7.90	ALPT =	8.07	ALPT =	8.06
	BETA =	-0.18	BETA =	-0.10	BETA =	-0.36	BETA =	-0.30	BETA =	-0.27
	H =	28440.	H =	28450.	H =	28498.	H =	28475.	H =	28443.
	TINF =	-35.2	TINF =	-35.1	TINF =	-35.4	TINF =	-35.0	TINF =	-35.1
	RNPU =	2.3E+06	RNPU =	2.3E+06	RNPU =	2.3E+06	RNPU =	2.3E+06	RNPU =	2.3E+06
	PSUR =	660.5	PSUR =	656.0	PSUR =	656.0	PSUR =	660.5	PSUR =	662.7
	MTOP =	0.81	MTOP =	0.82	MTOP =	0.80	MTOP =	0.80	MTOP =	0.81
Y,in.	U/UTOP	W/UTOP	U/UTOP	W/UTOP	U/UTOP	W/UTOP	U/UTOP	W/UTOP	U/UTOP	W/UTOP
0.240	0.6668	-0.1839	0.6684	-0.2126	0.6703	-0.2130	0.6667	-0.1879	0.6605	-0.2147
0.470	0.7775	-0.0112	0.7743	0.0060	0.7875	0.0053	0.7785	-0.0086	0.7681	-0.0058
0.970	0.8392	0.0424	0.8291	0.0439	0.8499	0.0410	0.8352	0.0405	0.8314	0.0403
1.470	0.8772	-0.1934	0.8723	-0.2056	0.8903	-0.1922	0.8803	-0.1874	0.8741	-0.1913
1.960	0.9171	-0.1678	0.9127	-0.1682	0.9258	-0.1695	0.9155	-0.1622	0.9097	-0.1572
2.330	0.9158	-0.1517	0.9109	-0.1456	0.9321	-0.1400	0.9124	-0.1441	0.9051	-0.1336
2.990	0.9448	-0.2420	0.9487	-0.2469	0.9579	-0.2530	0.9432	-0.2427	0.9369	-0.2434
3.490	0.9852	-0.1495	0.9827	-0.1487	0.9952	-0.1500	0.9838	-0.1434	0.9757	-0.1440
3.990	0.9857	-0.1539	0.9838	-0.1529	0.9953	-0.1549	0.9883	-0.1585	0.9788	-0.1533
4.960	1.0000	-0.1064	1.0000	-0.1068	1.0000	-0.1051	1.0000	-0.1063	1.0000	-0.1060

F111/MAW BOUNDARY LAYER DATA, FLT 229										
Time	12:41:01.000		12:41:02.000		12:41:04.000		12:44:01.000		12:44:01.500	
	Camber	10/2	Camber	10/2	Camber	10/2	Camber	5/6	Camber	5/6
	QINF =	310.8	QINF =	313.1	QINF =	318.0	QINF =	301.2	QINF =	301.2
	MINF =	0.808	MINF =	0.810	MINF =	0.814	MINF =	0.802	MINF =	0.802
	ALPT =	8.42	ALPT =	8.34	ALPT =	8.40	ALPT =	5.01	ALPT =	4.98
	BETA =	-0.21	BETA =	-0.10	BETA =	-0.07	BETA =	-0.27	BETA =	-0.30
	H =	28230.	H =	28189.	H =	28085.	H =	28641.	H =	28641.
	TINF =	-34.2	TINF =	-34.5	TINF =	-34.4	TINF =	-37.2	TINF =	-37.5
	RNPU =	2.4E+06	RNPU =	2.4E+06	RNPU =	2.4E+06	RNPU =	2.3E+06	RNPU =	2.4E+06
	PSUR =	674.9	PSUR =	676.0	PSUR =	674.9	PSUR =	617.6	PSUR =	605.5
	MTOP =	0.80	MTOP =	0.81	MTOP =	0.82	MTOP =	0.87	MTOP =	0.89
Y,in.	U/UTOP	W/UTOP	U/UTOP	W/UTOP	U/UTOP	W/UTOP	U/UTOP	W/UTOP	U/UTOP	W/UTOP
0.240	0.6578	-0.1543	0.6564	-0.1834	0.6449	-0.1817	0.6364	-0.1999	0.6518	-0.2029
0.470	0.7536	0.0052	0.7590	-0.0119	0.7468	0.0052	0.7580	-0.0092	0.7583	-0.0122
0.970	0.8188	0.0347	0.8149	0.0346	0.8027	0.0297	0.8518	0.0527	0.8496	0.0468
1.470	0.8532	-0.1841	0.8536	-0.1930	0.8371	-0.1803	0.9025	-0.1748	0.9085	-0.1681
1.960	0.9078	-0.1559	0.8890	-0.1491	0.8781	-0.1589	0.9572	-0.1681	0.9457	-0.1600
2.330	0.9045	-0.1460	0.8963	-0.1451	0.8839	-0.1525	0.9490	-0.1315	0.9433	-0.1377
2.990	0.9425	-0.2472	0.9339	-0.2481	0.9209	-0.2467	0.9593	-0.2290	0.9564	-0.2354
3.490	0.9750	-0.1530	0.9786	-0.1439	0.9697	-0.1514	0.9809	-0.1608	0.9830	-0.1442
3.990	0.9856	-0.1625	0.9835	-0.1545	0.9896	-0.1562	0.9879	-0.1798	0.9805	-0.1713
4.960	1.0000	-0.1106	1.0000	-0.1092	1.0000	-0.1130	1.0000	-0.1202	1.0000	-0.1188

Table K-2. Continued.

F111/MAW BOUNDARY LAYER DATA, FLT 229										
Time	12:44:03.500		12:44:04.000		12:44:09.000		12:44:09.500		12:44:13.000	
	Camber	5/6	Camber	5/6	Camber	5/6	Camber	5/6	Camber	5/6
	QINF =	300.5	QINF =	300.3	QINF =	299.6	QINF =	299.6	QINF =	301.0
	MINF =	0.801	MINF =	0.801	MINF =	0.801	MINF =	0.801	MINF =	0.802
	ALPT =	5.04	ALPT =	5.04	ALPT =	4.50	ALPT =	4.55	ALPT =	4.99
	BETA =	-0.36	BETA =	-0.30	BETA =	-0.30	BETA =	-0.04	BETA =	-0.15
	H =	28640.	H =	28639.	H =	28660.	H =	28660.	H =	28640.
	TINF =	-37.4	TINF =	-37.4	TINF =	-37.6	TINF =	-37.3	TINF =	-37.1
	RNPU =	2.3E+06	RNPU =	2.3E+06	RNPU =	2.3E+06	RNPU =	2.3E+06	RNPU =	2.3E+06
	PSUR =	617.6	PSUR =	612.1	PSUR =	622.0	PSUR =	617.6	PSUR =	620.9
	MTOP =	0.87	MTOP =	0.88	MTOP =	0.87	MTOP =	0.87	MTOP =	0.86
Y,in.	U/UTOP	W/UTOP	U/UTOP	W/UTOP	U/UTOP	W/UTOP	U/UTOP	W/UTOP	U/UTOP	W/UTOP
0.240	0.6354	-0.1983	0.6435	-0.2322	0.6348	-0.2018	0.6386	-0.1915	0.6269	-0.1951
0.470	0.7490	-0.0120	0.7463	0.0024	0.7530	-0.0120	0.7549	-0.0092	0.7462	-0.0061
0.970	0.8340	0.0430	0.8307	0.0454	0.8494	0.0603	0.8508	0.0496	0.8412	0.0543
1.470	0.8884	-0.1704	0.8890	-0.1695	0.9123	-0.1716	0.9069	-0.1712	0.9009	-0.1712
1.960	0.9232	-0.1349	0.9348	-0.1500	0.9691	-0.1575	0.9532	-0.1534	0.9585	-0.1545
2.330	0.9343	-0.1402	0.9395	-0.1363	0.9586	-0.1323	0.9477	-0.1394	0.9467	-0.1356
2.990	0.9501	-0.2322	0.9538	-0.2243	0.9682	-0.2279	0.9596	-0.2310	0.9643	-0.2257
3.490	0.9808	-0.1519	0.9769	-0.1154	0.9868	-0.1494	0.9857	-0.1288	0.9866	-0.1512
3.990	0.9751	-0.1846	0.9773	-0.1698	0.9904	-0.1686	0.9849	-0.1725	0.9888	-0.1661
4.960	1.0000	-0.1203	1.0000	-0.1225	1.0000	-0.1151	1.0000	-0.1214	1.0000	-0.1188

F111/MAW BOUNDARY LAYER DATA, FLT 229										
Time	12:36:46.000		12:36:53.500		12:37:02.500		12:37:05.000		12:37:10.000	
	Camber	0/2	Camber	0/2	Camber	0/2	Camber	0/2	Camber	0/2
	QINF =	297.9	QINF =	298.6	QINF =	300.4	QINF =	301.1	QINF =	301.8
	MINF =	0.798	MINF =	0.798	MINF =	0.800	MINF =	0.801	MINF =	0.802
	ALPT =	5.66	ALPT =	5.65	ALPT =	6.04	ALPT =	6.09	ALPT =	7.05
	BETA =	-0.04	BETA =	-0.15	BETA =	-0.65	BETA =	-0.79	BETA =	-0.07
	H =	28624.	H =	28614.	H =	28583.	H =	28584.	H =	28563.
	TINF =	-38.3	TINF =	-38.0	TINF =	-38.2	TINF =	-38.0	TINF =	-38.1
	RNPU =	2.3E+06	RNPU =	2.3E+06	RNPU =	2.4E+06	RNPU =	2.4E+06	RNPU =	2.4E+06
	PSUR =	653.8	PSUR =	653.8	PSUR =	652.7	PSUR =	654.9	PSUR =	652.7
	MTOP =	0.81	MTOP =	0.83	MTOP =	0.82	MTOP =	0.81	MTOP =	0.82
Y,in.	U/UTOP	W/UTOP	U/UTOP	W/UTOP	U/UTOP	W/UTOP	U/UTOP	W/UTOP	U/UTOP	W/UTOP
0.240	0.6110	-0.2636	0.6076	-0.2504	0.6051	-0.2437	0.6084	-0.2054	0.6390	-0.1950
0.470	0.7509	-0.0061	0.7437	-0.0140	0.7411	0.0026	0.7420	0.0026	0.7691	-0.0230
0.970	0.8938	0.0804	0.8821	0.0819	0.8899	0.0758	0.8903	0.0786	0.8836	0.0609
1.470	0.9873	-0.1834	0.9660	-0.1828	0.9792	-0.1829	0.9828	-0.1791	0.9760	-0.1994
1.960	1.0261	-0.1915	1.0059	-0.1883	1.0166	-0.1953	1.0257	-0.1872	1.0120	-0.1944
2.330	0.9940	-0.1398	0.9746	-0.1393	0.9896	-0.1379	0.9936	-0.1326	0.9878	-0.1529
2.990	0.9957	-0.2332	0.9777	-0.2335	0.9923	-0.2304	0.9954	-0.2237	0.9859	-0.2448
3.490	1.0102	-0.1229	0.9925	-0.1219	1.0080	-0.1208	1.0119	-0.1121	1.0027	-0.1405
3.990	0.9990	-0.1321	0.9819	-0.1279	0.9904	-0.1408	1.0016	-0.1288	0.9872	-0.1540
4.960	1.0000	-0.0914	1.0000	-0.0829	1.0000	-0.0881	1.0000	-0.0887	1.0000	-0.1047

Table K-2. Continued.

F111/MAW BOUNDARY LAYER DATA, FLT 229										
Time	12:37:11.000		12:37:17.500		12:37:19.500		12:38:21.000		12:38:26.000	
	Camber	0/2	Camber	0/2	Camber	0/2	Camber	5/2	Camber	5/2
	QINF =	301.8	QINF =	301.2	QINF =	302.2	QINF =	301.3	QINF =	302.2
	MINF =	0.802	MINF =	0.800	MINF =	0.800	MINF =	0.801	MINF =	0.802
	ALPT =	7.18	ALPT =	8.03	ALPT =	8.03	ALPT =	5.98	ALPT =	6.01
	BETA =	-0.36	BETA =	-0.24	BETA =	-0.30	BETA =	-0.21	BETA =	-0.21
	H =	28563.	H =	28495.	H =	28441.	H =	28574.	H =	28575.
	TINF =	-38.1	TINF =	-37.8	TINF =	-37.6	TINF =	-36.7	TINF =	-37.2
	RNPU =	2.4E+06	RNPU =	2.4E+06	RNPU =	2.4E+06	RNPU =	2.3E+06	RNPU =	2.4E+06
	PSUR =	652.7	PSUR =	656.0	PSUR =	657.1	PSUR =	657.1	PSUR =	657.1
	MTOP =	0.81	MTOP =	0.80	MTOP =	0.80	MTOP =	0.80	MTOP =	0.81
Y,in.	U/UTOP	W/UTOP	U/UTOP	W/UTOP	U/UTOP	W/UTOP	U/UTOP	W/UTOP	U/UTOP	W/UTOP
0.240	0.6410	-0.2674	0.6802	-0.2420	0.6754	-0.2042	0.6462	-0.2496	0.6324	-0.2426
0.470	0.7657	-0.0192	0.8012	-0.0375	0.7966	-0.0373	0.7694	-0.0034	0.7654	-0.0032
0.970	0.8986	0.0592	0.8940	0.0476	0.8900	0.0506	0.8938	0.0771	0.8860	0.0841
1.470	0.9733	-0.2042	0.9517	-0.2145	0.9415	-0.2152	0.9660	-0.1950	0.9540	-0.1941
1.960	1.0172	-0.2019	0.9922	-0.1968	0.9836	-0.2031	1.0210	-0.1927	1.0141	-0.1950
2.330	0.9942	-0.1606	0.9904	-0.1670	0.9781	-0.1647	1.0006	-0.1470	0.9928	-0.1457
2.990	0.9981	-0.2476	1.0044	-0.2587	0.9958	-0.2545	1.0035	-0.2368	0.9923	-0.2357
3.490	1.0089	-0.1414	1.0189	-0.1587	1.0114	-0.1187	1.0087	-0.1297	1.0091	-0.1233
3.990	0.9905	-0.1588	1.0030	-0.1619	1.0012	-0.1836	1.0072	-0.1364	0.9947	-0.1410
4.960	1.0000	-0.1059	1.0000	-0.1124	1.0000	-0.1096	1.0000	-0.0998	1.0000	-0.0922

F111/MAW BOUNDARY LAYER DATA, FLT 229										
Time	12:38:41.000		12:38:45.500		12:38:46.000		12:38:58.500		12:38:59.500	
	Camber	5/2	Camber	5/2	Camber	5/2	Camber	5/2	Camber	5/2
	QINF =	301.3	QINF =	302.4	QINF =	302.4	QINF =	290.1	QINF =	289.8
	MINF =	0.802	MINF =	0.803	MINF =	0.803	MINF =	0.790	MINF =	0.790
	ALPT =	5.99	ALPT =	6.98	ALPT =	7.20	ALPT =	8.06	ALPT =	8.10
	BETA =	-0.91	BETA =	-0.10	BETA =	-0.07	BETA =	-0.27	BETA =	-0.33
	H =	28596.	H =	28587.	H =	28587.	H =	28791.	H =	28790.
	TINF =	-36.8	TINF =	-36.9	TINF =	-36.9	TINF =	-37.3	TINF =	-37.0
	RNPU =	2.3E+06	RNPU =	2.4E+06	RNPU =	2.4E+06	RNPU =	2.3E+06	RNPU =	2.3E+06
	PSUR =	657.1	PSUR =	656.0	PSUR =	656.0	PSUR =	649.4	PSUR =	650.5
	MTOP =	0.81	MTOP =	0.81	MTOP =	0.80	MTOP =	0.79	MTOP =	0.79
Y,in.	U/UTOP	W/UTOP	U/UTOP	W/UTOP	U/UTOP	W/UTOP	U/UTOP	W/UTOP	U/UTOP	W/UTOP
0.240	0.6146	-0.2073	0.6579	-0.3589	0.6773	-0.2412	0.6719	-0.2236	0.6734	-0.2863
0.470	0.7561	0.0025	0.7661	-0.0118	0.7908	-0.0296	0.7963	-0.0184	0.7971	-0.0140
0.970	0.8872	0.0780	0.8758	0.0597	0.8857	0.0580	0.8797	0.0476	0.8742	0.0448
1.470	0.9610	-0.1786	0.9385	-0.2099	0.9460	-0.2152	0.9330	-0.1988	0.9257	-0.2049
1.960	1.0168	-0.1850	0.9886	-0.1848	0.9970	-0.1917	0.9768	-0.1819	0.9680	-0.1783
2.330	0.9943	-0.1318	0.9914	-0.1569	0.9990	-0.1673	0.9780	-0.1670	0.9673	-0.1629
2.990	0.9951	-0.2324	1.0001	-0.2475	1.0105	-0.2672	0.9999	-0.2570	0.9948	-0.2593
3.490	1.0114	-0.1181	1.0089	-0.1420	1.0254	-0.1461	1.0211	-0.1418	1.0212	-0.2006
3.990	1.0167	-0.1178	0.9991	-0.1600	1.0076	-0.1583	0.9997	-0.1674	1.0028	-0.1537
4.960	1.0000	-0.0764	1.0000	-0.1062	1.0000	-0.1001	1.0000	-0.1065	1.0000	-0.1040

Table K-2. Continued.

F111/MAW BOUNDARY LAYER DATA, FLT 229										
Time	12:40:17.500		12:40:19.500		12:40:38.000		12:40:38.500		12:40:39.000	
	Camber	10/2	Camber	10/2	Camber	10/2	Camber	10/2	Camber	10/2
	QINF =	303.7	QINF =	304.1	QINF =	306.9	QINF =	306.9	QINF =	306.9
	MINF =	0.803	MINF =	0.803	MINF =	0.806	MINF =	0.806	MINF =	0.806
	ALPT =	5.97	ALPT =	5.97	ALPT =	6.95	ALPT =	7.07	ALPT =	7.29
	BETA =	-0.21	BETA =	0.05	BETA =	-0.18	BETA =	-0.04	BETA =	-0.12
	H =	28465.	H =	28466.	H =	28426.	H =	28415.	H =	28415.
	TINF =	-35.6	TINF =	-35.6	TINF =	-35.3	TINF =	-35.3	TINF =	-35.3
	RNPU =	2.4E+06	RNPU =	2.4E+06	RNPU =	2.4E+06	RNPU =	2.4E+06	RNPU =	2.4E+06
	PSUR =	659.3	PSUR =	659.3	PSUR =	663.8	PSUR =	663.8	PSUR =	659.3
	MTOP =	0.81	MTOP =	0.81	MTOP =	0.80	MTOP =	0.80	MTOP =	0.81
Y,in.	U/UTOP	W/UTOP	U/UTOP	W/UTOP	U/UTOP	W/UTOP	U/UTOP	W/UTOP	U/UTOP	W/UTOP
0.240	0.6633	-0.1933	0.6658	-0.2003	0.6814	-0.2064	0.6862	-0.2019	0.6814	-0.2602
0.470	0.7847	-0.0059	0.7895	-0.0060	0.7903	-0.0148	0.7944	-0.0291	0.7983	-0.0155
0.970	0.8790	0.0793	0.8896	0.0753	0.8771	0.0562	0.8727	0.0601	0.8764	0.0427
1.470	0.9344	-0.1889	0.9407	-0.1835	0.9419	-0.1872	0.9260	-0.2004	0.9242	-0.2048
1.960	0.9863	-0.1773	0.9930	-0.1821	0.9678	-0.1824	0.9700	-0.1818	0.9640	-0.1840
2.330	0.9818	-0.1385	0.9905	-0.1420	0.9712	-0.1516	0.9706	-0.1461	0.9646	-0.1579
2.990	0.9903	-0.2368	0.9971	-0.2365	0.9976	-0.2473	1.0005	-0.2399	0.9944	-0.2467
3.490	0.9992	-0.1242	1.0008	-0.1252	1.0217	-0.1484	1.0267	-0.1486	1.0283	-0.1718
3.990	0.9888	-0.1389	1.0049	-0.1287	1.0033	-0.1489	1.0061	-0.1567	1.0093	-0.1608
4.960	1.0000	-0.0867	1.0000	-0.0861	1.0000	-0.1016	1.0000	-0.1009	1.0000	-0.1043

F111/MAW BOUNDARY LAYER DATA, FLT 229										
Time	12:40:45.000		12:40:46.500		12:40:52.500		12:40:57.500		12:42:27.500	
	Camber	10/2	Camber	10/2	Camber	10/2	Camber	10/2	Camber	5/2
	QINF =	302.4	QINF =	300.6	QINF =	295.8	QINF =	301.7	QINF =	305.0
	MINF =	0.800	MINF =	0.798	MINF =	0.792	MINF =	0.798	MINF =	0.804
	ALPT =	8.02	ALPT =	8.01	ALPT =	8.00	ALPT =	8.01	ALPT =	5.52
	BETA =	-0.36	BETA =	0.08	BETA =	-0.12	BETA =	-0.21	BETA =	0.08
	H =	28441.	H =	28460.	H =	28486.	H =	28372.	H =	28468.
	TINF =	-35.3	TINF =	-35.1	TINF =	-35.3	TINF =	-35.4	TINF =	-36.4
	RNPU =	2.4E+06	RNPU =	2.3E+06	RNPU =	2.3E+06	RNPU =	2.4E+06	RNPU =	2.4E+06
	PSUR =	660.5	PSUR =	660.5	PSUR =	659.4	PSUR =	663.8	PSUR =	660.4
	MTOP =	0.81	MTOP =	0.81	MTOP =	0.81	MTOP =	0.82	MTOP =	0.81
Y,in.	U/UTOP	W/UTOP	U/UTOP	W/UTOP	U/UTOP	W/UTOP	U/UTOP	W/UTOP	U/UTOP	W/UTOP
0.240	0.6646	-0.1978	0.6736	-0.1983	0.6611	-0.2150	0.6544	-0.1843	0.6349	-0.2335
0.470	0.7774	-0.0112	0.7860	-0.0086	0.7771	-0.0032	0.7632	-0.0031	0.7694	-0.0021
0.970	0.8402	0.0554	0.8399	0.0376	0.8399	0.0416	0.8283	0.0424	0.8855	0.0866
1.470	0.8807	-0.1951	0.8792	-0.1992	0.8813	-0.1899	0.8685	-0.1884	0.9649	-0.1915
1.960	0.9187	-0.1643	0.9158	-0.1702	0.9176	-0.1609	0.9021	-0.1617	1.0236	-0.1900
2.330	0.9179	-0.1480	0.9174	-0.1540	0.9110	-0.1411	0.9006	-0.1404	0.9987	-0.1439
2.990	0.9505	-0.2412	0.9498	-0.2510	0.9440	-0.2568	0.9345	-0.2412	1.0007	-0.2385
3.490	1.0014	-0.1324	0.9888	-0.1510	0.9919	-0.1369	0.9894	-0.1293	1.0035	-0.1258
3.990	0.9853	-0.1523	0.9898	-0.1538	0.9858	-0.1627	0.9756	-0.1508	1.0018	-0.1604
4.960	1.0000	-0.1080	1.0000	-0.1099	1.0000	-0.1067	1.0000	-0.1011	1.0000	-0.0871

Table K-2. Continued.

F111/MAW BOUNDARY LAYER DATA, FLT 229										
Time	12:42:29.000		12:42:42.500		12:42:44.500		12:42:52.500		12:42:55.500	
	Camber	5/2	Camber	5/2	Camber	5/2	Camber	5/2	Camber	5/2
	QINF =	305.5	QINF =	306.3	QINF =	306.0	QINF =	306.4	QINF =	306.9
	MINF =	0.805	MINF =	0.807	MINF =	0.806	MINF =	0.808	MINF =	0.808
	ALPT =	5.66	ALPT =	5.94	ALPT =	5.97	ALPT =	5.98	ALPT =	6.95
	BETA =	0.14	BETA =	-0.10	BETA =	0.11	BETA =	-0.88	BETA =	0.02
	H =	28468.	H =	28503.	H =	28514.	H =	28571.	H =	28549.
	TINF =	-36.5	TINF =	-36.7	TINF =	-36.7	TINF =	-37.2	TINF =	-37.2
	RNPU =	2.4E+06	RNPU =	2.4E+06	RNPU =	2.4E+06	RNPU =	2.4E+06	RNPU =	2.4E+06
	PSUR =	658.2	PSUR =	661.6	PSUR =	661.6	PSUR =	658.2	PSUR =	656.0
	MTOP =	0.82	MTOP =	0.82	MTOP =	0.81	MTOP =	0.82	MTOP =	0.82
Y,in.	U/UTOP	W/UTOP	U/UTOP	W/UTOP	U/UTOP	W/UTOP	U/UTOP	W/UTOP	U/UTOP	W/UTOP
0.240	0.6345	-0.1896	0.6350	-0.1897	0.6265	-0.2455	0.6229	-0.1992	0.6646	-0.2367
0.470	0.7637	-0.0221	0.7556	-0.0022	0.7600	-0.0084	0.7620	0.0162	0.7832	-0.0274
0.970	0.8859	0.0848	0.8781	0.0765	0.8837	0.0806	0.8896	0.0850	0.8756	0.0625
1.470	0.9617	-0.1864	0.9522	-0.1972	0.9546	-0.1977	0.9543	-0.1741	0.9384	-0.2023
1.960	1.0173	-0.1920	1.0116	-0.1891	1.0158	-0.1920	1.0108	-0.1769	0.9872	-0.1899
2.330	0.9987	-0.1486	0.9880	-0.1467	0.9941	-0.1538	0.9902	-0.1274	0.9894	-0.1622
2.990	0.9943	-0.2311	0.9868	-0.2333	0.9936	-0.2397	0.9905	-0.2196	1.0010	-0.2472
3.490	1.0094	-0.1240	1.0023	-0.1302	1.0076	-0.1287	1.0079	-0.1011	1.0172	-0.1499
3.990	0.9987	-0.1324	0.9981	-0.1364	0.9979	-0.1239	0.9887	-0.1353	0.9992	-0.1534
4.960	1.0000	-0.0914	1.0000	-0.0872	1.0000	-0.0922	1.0000	-0.0806	1.0000	-0.1028

F111/MAW BOUNDARY LAYER DATA, FLT 229										
Time	12:42:56.000		12:42:57.500		12:43:12.000		12:43:14.500		12:44:08.500	
	Camber	5/2	Camber	5/2	Camber	5/2	Camber	5/2	Camber	5/6
	QINF =	306.9	QINF =	307.3	QINF =	303.7	QINF =	306.2	QINF =	299.6
	MINF =	0.808	MINF =	0.809	MINF =	0.805	MINF =	0.807	MINF =	0.801
	ALPT =	7.06	ALPT =	7.19	ALPT =	7.97	ALPT =	8.01	ALPT =	4.54
	BETA =	0.08	BETA =	-0.10	BETA =	-0.24	BETA =	-0.07	BETA =	-0.36
	H =	28549.	H =	28550.	H =	28578.	H =	28526.	H =	28660.
	TINF =	-37.2	TINF =	-37.0	TINF =	-37.4	TINF =	-37.4	TINF =	-37.3
	RNPU =	2.4E+06	RNPU =	2.4E+06	RNPU =	2.4E+06	RNPU =	2.4E+06	RNPU =	2.3E+06
	PSUR =	656.0	PSUR =	653.8	PSUR =	658.3	PSUR =	657.2	PSUR =	620.9
	MTOP =	0.81	MTOP =	0.82	MTOP =	0.81	MTOP =	0.81	MTOP =	0.87
Y,in.	U/UTOP	W/UTOP	U/UTOP	W/UTOP	U/UTOP	W/UTOP	U/UTOP	W/UTOP	U/UTOP	W/UTOP
0.240	0.6636	-0.2264	0.6700	-0.2386	0.6760	-0.1963	0.6706	-0.1993	0.6334	-0.2128
0.470	0.7884	-0.0276	0.7875	-0.0276	0.7864	-0.0275	0.7878	-0.0394	0.7531	-0.0165
0.970	0.8839	0.0594	0.8731	0.0606	0.8662	0.0325	0.8552	0.0474	0.8430	0.0563
1.470	0.9416	-0.2112	0.9349	-0.2050	0.9195	-0.1983	0.9116	-0.2123	0.9038	-0.1727
1.960	0.9877	-0.1851	0.9808	-0.1863	0.9609	-0.1775	0.9573	-0.1858	0.9516	-0.1630
2.330	0.9911	-0.1619	0.9829	-0.1610	0.9578	-0.1709	0.9596	-0.1627	0.9454	-0.1363
2.990	1.0087	-0.2480	1.0059	-0.2539	0.9889	-0.2710	0.9916	-0.2592	0.9535	-0.2265
3.490	1.0192	-0.1450	1.0129	-0.1399	1.0187	-0.1551	1.0250	-0.1607	0.9798	-0.1505
3.990	0.9992	-0.1424	0.9997	-0.1545	0.9854	-0.1755	1.0116	-0.1642	0.9769	-0.1683
4.960	1.0000	-0.1140	1.0000	-0.1036	1.0000	-0.1099	1.0000	-0.1132	1.0000	-0.1142

Table K-2. Continued.

F111/MAW BOUNDARY LAYER DATA, FLT 229										
Time	12:44:10.000		12:44:12.500		12:44:13.500		12:44:19.000		12:44:30.500	
	Camber	5/6	Camber	5/6	Camber	5/6	Camber	5/6	Camber	5/6
	QINF =	299.8	QINF =	300.7	QINF =	301.0	QINF =	299.2	QINF =	297.7
	MINF =	0.801	MINF =	0.802	MINF =	0.802	MINF =	0.799	MINF =	0.797
	ALPT =	4.50	ALPT =	4.95	ALPT =	4.97	ALPT =	5.02	ALPT =	5.83
	BETA =	-0.30	BETA =	-0.27	BETA =	-0.30	BETA =	-0.15	BETA =	-0.56
	H =	28661.	H =	28651.	H =	28640.	H =	28626.	H =	28612.
	TINF =	-37.3	TINF =	-37.1	TINF =	-37.1	TINF =	-37.2	TINF =	-37.2
	RNPU =	2.3E+06	RNPU =	2.3E+06	RNPU =	2.3E+06	RNPU =	2.3E+06	RNPU =	2.3E+06
	PSUR =	603.3	PSUR =	605.5	PSUR =	617.6	PSUR =	621.0	PSUR =	607.8
	MTOP =	0.89	MTOP =	0.90	MTOP =	0.86	MTOP =	0.87	MTOP =	0.88
Y,in.	U/UTOP	W/UTOP	U/UTOP	W/UTOP	U/UTOP	W/UTOP	U/UTOP	W/UTOP	U/UTOP	W/UTOP
0.240	0.6545	-0.2322	0.6369	-0.2007	0.6356	-0.1978	0.6247	-0.1836	0.6396	-0.1978
0.470	0.7618	-0.0199	0.7529	-0.0025	0.7497	-0.0025	0.7346	-0.0141	0.7558	0.0072
0.970	0.8531	0.0608	0.8348	0.0502	0.8472	0.0539	0.8398	0.0439	0.8379	0.0290
1.470	0.9121	-0.1659	0.8965	-0.1725	0.9066	-0.1711	0.8891	-0.1774	0.8897	-0.1783
1.960	0.9543	-0.1562	0.9461	-0.1556	0.9611	-0.1517	0.9395	-0.1539	0.9242	-0.1455
2.330	0.9518	-0.1444	0.9409	-0.1347	0.9518	-0.1342	0.9258	-0.1468	0.9245	-0.1357
2.990	0.9648	-0.2340	0.9543	-0.2330	0.9674	-0.2289	0.9495	-0.2316	0.9496	-0.2246
3.490	0.9821	-0.1128	0.9796	-0.1478	0.9913	-0.1490	0.9724	-0.1563	0.9777	-0.1420
3.990	0.9818	-0.1612	0.9913	-0.1589	0.9869	-0.1729	0.9801	-0.1866	0.9794	-0.1798
4.960	1.0000	-0.1178	1.0000	-0.1067	1.0000	-0.1260	1.0000	-0.1256	1.0000	-0.1241

F111/MAW BOUNDARY LAYER DATA, FLT 229										
Time	12:44:31.000		12:44:31.500		12:44:38.000		12:44:39.000		12:44:39.500	
	Camber	5/6	Camber	5/6	Camber	5/6	Camber	5/6	Camber	5/6
	QINF =	297.8	QINF =	297.5	QINF =	293.0	QINF =	292.3	QINF =	291.7
	MINF =	0.797	MINF =	0.797	MINF =	0.791	MINF =	0.790	MINF =	0.789
	ALPT =	5.96	ALPT =	6.11	ALPT =	6.91	ALPT =	6.99	ALPT =	7.04
	BETA =	-0.56	BETA =	-0.53	BETA =	-0.47	BETA =	-0.38	BETA =	-0.30
	H =	28601.	H =	28601.	H =	28604.	H =	28603.	H =	28602.
	TINF =	-36.9	TINF =	-37.2	TINF =	-37.1	TINF =	-36.7	TINF =	-37.2
	RNPU =	2.3E+06	RNPU =	2.3E+06	RNPU =	2.3E+06	RNPU =	2.3E+06	RNPU =	2.3E+06
	PSUR =	604.5	PSUR =	601.2	PSUR =	601.2	PSUR =	595.7	PSUR =	601.2
	MTOP =	0.88	MTOP =	0.88	MTOP =	0.86	MTOP =	0.86	MTOP =	0.86
Y,in.	U/UTOP	W/UTOP	U/UTOP	W/UTOP	U/UTOP	W/UTOP	U/UTOP	W/UTOP	U/UTOP	W/UTOP
0.240	0.6482	-0.1916	0.6450	-0.2644	0.6625	-0.2330	0.6715	-0.2282	0.6577	-0.2349
0.470	0.7562	-0.0023	0.7460	-0.0055	0.7571	-0.0289	0.7653	-0.0140	0.7484	-0.0270
0.970	0.8332	0.0328	0.8150	0.0237	0.8084	-0.0119	0.8067	-0.0126	0.7981	-0.0188
1.470	0.8731	-0.1869	0.8483	-0.1818	0.8363	-0.2048	0.8388	-0.2067	0.8265	-0.2142
1.960	0.9041	-0.1215	0.8641	-0.1371	0.8332	-0.1305	0.8563	-0.1200	0.8261	-0.1249
2.330	0.9162	-0.1477	0.8880	-0.1456	0.8487	-0.1494	0.8575	-0.1484	0.8533	-0.1527
2.990	0.9378	-0.2314	0.9089	-0.2475	0.8861	-0.2490	0.8981	-0.2352	0.8819	-0.2677
3.490	0.9778	-0.1507	0.9650	-0.1522	0.9513	-0.1546	0.9529	-0.1471	0.9545	-0.1544
3.990	0.9752	-0.1590	0.9486	-0.1866	0.9620	-0.2312	0.9684	-0.2121	0.9485	-0.1904
4.960	1.0000	-0.1244	1.0000	-0.1284	1.0000	-0.1408	1.0000	-0.1534	1.0000	-0.1491

Table K-2. Continued.

F111/MAW BOUNDARY LAYER DATA, FLT 229										
Time	12:44:52.000		12:44:52.500		12:44:53.000		12:52:48.500		12:53:53.000	
	Camber	5/6	Camber	5/6	Camber	5/6	Camber	0/2	Camber	0/2
	QINF =	299.3	QINF =	300.0	QINF =	300.5	QINF =	302.8	QINF =	308.1
	MINF =	0.799	MINF =	0.799	MINF =	0.800	MINF =	0.802	MINF =	0.807
	ALPT =	8.07	ALPT =	8.05	ALPT =	8.04	ALPT =	5.61	ALPT =	3.13
	BETA =	-0.30	BETA =	-0.30	BETA =	-0.38	BETA =	0.08	BETA =	0.14
	H =	28570.	H =	28560.	H =	28550.	H =	28498.	H =	28372.
	TINF =	-36.7	TINF =	-36.5	TINF =	-36.5	TINF =	-36.1	TINF =	-35.7
	RNPU =	2.3E+06	RNPU =	2.3E+06	RNPU =	2.3E+06	RNPU =	2.4E+06	RNPU =	2.4E+06
	PSUR =	603.4	PSUR =	602.3	PSUR =	611.2	PSUR =	659.3	PSUR =	664.8
	MTOP =	0.88	MTOP =	0.89	MTOP =	0.88	MTOP =	0.82	MTOP =	0.82
Y,in.	U/UTOP	W/UTOP	U/UTOP	W/UTOP	U/UTOP	W/UTOP	U/UTOP	W/UTOP	U/UTOP	W/UTOP
0.240	0.6755	-0.2734	0.6896	-0.2541	0.6690	-0.2608	0.6058	-0.2345	0.6219	-0.2165
0.470	0.7558	-0.0674	0.7662	-0.0665	0.7518	-0.0661	0.7416	-0.0150	0.7735	0.0132
0.970	0.7941	-0.0373	0.8028	-0.0314	0.7909	-0.0403	0.8834	0.0769	0.9309	0.1293
1.470	0.8319	-0.2298	0.8255	-0.2227	0.8401	-0.2344	0.9850	-0.1833	0.9952	-0.1472
1.960	0.8289	-0.1255	0.8250	-0.1291	0.8411	-0.1472	1.0215	-0.1912	1.0212	-0.1633
2.330	0.8428	-0.1472	0.8384	-0.1649	0.8482	-0.1664	0.9876	-0.1372	0.9895	-0.1083
2.990	0.8869	-0.2853	0.8768	-0.2450	0.8860	-0.2693	0.9908	-0.2312	0.9917	-0.2031
3.490	0.9463	-0.1799	0.9322	-0.1918	0.9362	-0.1988	1.0085	-0.1274	1.0045	-0.1217
3.990	0.9639	-0.2253	0.9603	-0.2199	0.9627	-0.2210	0.9942	-0.1349	0.9987	-0.0956
4.960	1.0000	-0.1543	1.0000	-0.1659	1.0000	-0.1577	1.0000	-0.0928	1.0000	-0.0637

F111/MAW BOUNDARY LAYER DATA, FLT 229										
Time	12:53:53.500		12:53:54.000		12:54:01.500		13:03:57.500		13:03:59.000	
	Camber	0/2	Camber	0/2	Camber	0/2	Camber	1/4	Camber	1/4
	QINF =	310.1	QINF =	312.4	QINF =	346.4	QINF =	298.1	QINF =	297.4
	MINF =	0.809	MINF =	0.811	MINF =	0.837	MINF =	0.796	MINF =	0.796
	ALPT =	3.14	ALPT =	3.19	ALPT =	8.08	ALPT =	5.04	ALPT =	5.04
	BETA =	-0.04	BETA =	0.08	BETA =	0.11	BETA =	-0.07	BETA =	-0.01
	H =	28330.	H =	28289.	H =	27423.	H =	28535.	H =	28545.
	TINF =	-35.6	TINF =	-35.6	TINF =	-32.7	TINF =	-37.1	TINF =	-37.3
	RNPU =	2.4E+06	RNPU =	2.4E+06	RNPU =	2.6E+06	RNPU =	2.3E+06	RNPU =	2.3E+06
	PSUR =	664.8	PSUR =	669.3	PSUR =	693.7	PSUR =	651.7	PSUR =	651.7
	MTOP =	0.83	MTOP =	0.82	MTOP =	0.84	MTOP =	0.83	MTOP =	0.82
Y,in.	U/UTOP	W/UTOP	U/UTOP	W/UTOP	U/UTOP	W/UTOP	U/UTOP	W/UTOP	U/UTOP	W/UTOP
0.240	0.6179	-0.2149	0.6212	-0.1834	0.6775	-0.2143	0.5369	-0.4042	0.5373	-0.3838
0.470	0.7605	0.0051	0.7537	0.0097	0.7734	-0.0737	0.6735	0.0173	0.6745	0.0032
0.970	0.9290	0.1271	0.9254	0.1273	0.8367	0.0421	0.8521	0.0704	0.8527	0.0655
1.470	0.9906	-0.1317	0.9935	-0.1467	0.8961	-0.2191	0.9721	-0.2044	0.9725	-0.1997
1.960	1.0229	-0.1764	1.0185	-0.1607	0.9426	-0.1929	1.0243	-0.1932	1.0245	-0.1952
2.330	0.9888	-0.0977	0.9900	-0.1007	0.9546	-0.1835	0.9936	-0.1502	0.9935	-0.1577
2.990	0.9857	-0.2109	0.9874	-0.1996	0.9824	-0.2530	0.9939	-0.2415	0.9937	-0.2364
3.490	1.0079	-0.1212	1.0163	-0.0753	1.0073	-0.1843	1.0104	-0.1419	1.0111	-0.1304
3.990	0.9821	-0.0998	1.0156	-0.0895	0.9977	-0.1706	0.9770	-0.1692	0.9960	-0.1547
4.960	1.0000	-0.0587	1.0000	-0.0650	1.0000	-0.1110	1.0000	-0.0991	1.0000	-0.0973

Table K-2. Continued.

F111/MAW BOUNDARY LAYER DATA, FLT 229										
Time	13:04:07.500		13:04:14.000		13:04:14.500		13:04:17.500		13:04:18.000	
	Camber	1/4	Camber	0/2	Camber	0/2	Camber	0/2	Camber	0/2
	QINF =	296.5	QINF =	303.2	QINF =	304.8	QINF =	319.9	QINF =	322.7
	MINF =	0.795	MINF =	0.802	MINF =	0.804	MINF =	0.818	MINF =	0.820
	ALPT =	5.04	ALPT =	3.01	ALPT =	3.00	ALPT =	3.01	ALPT =	3.00
	BETA =	-0.21	BETA =	-0.27	BETA =	-0.27	BETA =	0.08	BETA =	-0.18
	H =	28577.	H =	28476.	H =	28445.	H =	28144.	H =	28081.
	TINF =	-36.9	TINF =	-36.5	TINF =	-36.7	TINF =	-35.4	TINF =	-34.8
	RNPU =	2.3E+06	RNPU =	2.4E+06	RNPU =	2.4E+06	RNPU =	2.4E+06	RNPU =	2.4E+06
	PSUR =	647.3	PSUR =	662.6	PSUR =	662.6	PSUR =	672.6	PSUR =	677.0
	MTOP =	0.83	MTOP =	0.83	MTOP =	0.81	MTOP =	0.84	MTOP =	0.84
Y,in.	U/UTOP	W/UTOP	U/UTOP	W/UTOP	U/UTOP	W/UTOP	U/UTOP	W/UTOP	U/UTOP	W/UTOP
0.240	0.5437	-0.4960	0.6046	-0.1759	0.6196	-0.1802	0.6046	-0.1541	0.6078	-0.1673
0.470	0.6709	0.0071	0.7567	0.0102	0.7682	0.0192	0.7527	0.0090	0.7503	-0.0041
0.970	0.8522	0.0743	0.9108	0.1264	0.9393	0.1323	0.9194	0.1275	0.9130	0.1325
1.470	0.9661	-0.2047	0.9841	-0.1425	1.0109	-0.1491	0.9902	-0.1443	0.9930	-0.1457
1.960	1.0184	-0.1927	1.0057	-0.1709	1.0401	-0.1683	1.0167	-0.1764	1.0212	-0.1761
2.330	0.9875	-0.1553	0.9765	-0.0905	1.0015	-0.1038	0.9862	-0.0971	0.9873	-0.0913
2.990	0.9862	-0.2376	0.9755	-0.2025	1.0011	-0.2026	0.9848	-0.1993	0.9820	-0.2039
3.490	1.0017	-0.1384	0.9951	-0.0879	1.0284	-0.0867	1.0041	-0.0834	1.0187	-0.0883
3.990	0.9924	-0.1484	0.9850	-0.1149	1.0110	-0.1027	0.9916	-0.0998	0.9891	-0.0973
4.960	1.0000	-0.0942	1.0000	-0.0598	1.0000	-0.0673	1.0000	-0.0638	1.0000	-0.0659

F111/MAW BOUNDARY LAYER DATA, FLT 229										
Time	13:04:23.500		13:04:24.500		13:04:25.000		13:04:29.000		13:04:29.500	
	Camber	2/6	Camber	3/6	Camber	3/6	Camber	4/7	Camber	4/7
	QINF =	353.4	QINF =	352.6	QINF =	351.3	QINF =	323.4	QINF =	318.1
	MINF =	0.842	MINF =	0.840	MINF =	0.837	MINF =	0.808	MINF =	0.803
	ALPT =	7.95	ALPT =	8.56	ALPT =	8.65	ALPT =	8.88	ALPT =	8.96
	BETA =	-0.07	BETA =	-0.12	BETA =	-0.27	BETA =	-0.07	BETA =	-0.01
	H =	27221.	H =	27141.	H =	27117.	H =	27364.	H =	27445.
	TINF =	-31.0	TINF =	-31.0	TINF =	-31.1	TINF =	-32.0	TINF =	-32.0
	RNPU =	2.6E+06	RNPU =	2.6E+06	RNPU =	2.6E+06	RNPU =	2.5E+06	RNPU =	2.4E+06
	PSUR =	700.4	PSUR =	698.3	PSUR =	689.5	PSUR =	647.7	PSUR =	643.3
	MTOP =	0.85	MTOP =	0.83	MTOP =	0.87	MTOP =	0.89	MTOP =	0.90
Y,in.	U/UTOP	W/UTOP	U/UTOP	W/UTOP	U/UTOP	W/UTOP	U/UTOP	W/UTOP	U/UTOP	W/UTOP
0.240	0.3831	0.2196	0.3252	-0.1072	0.2455	-0.0705	0.6231	-0.3865	0.6247	-0.3426
0.470	0.5489	0.1037	0.5349	0.2921	0.4869	0.3095	0.6886	-0.0924	0.7014	-0.1035
0.970	0.6798	0.0347	0.5804	0.0505	0.4898	0.0094	0.7675	-0.0543	0.7698	-0.0456
1.470	0.8110	-0.2057	0.6704	-0.1106	0.5236	-0.0983	0.8531	-0.2595	0.8509	-0.2418
1.960	0.9377	-0.1879	0.7940	-0.0985	0.6396	-0.0366	0.8954	-0.1963	0.8726	-0.1694
2.330	0.9908	-0.1760	0.8992	-0.1602	0.7492	-0.1354	0.9289	-0.2405	0.8963	-0.2309
2.990	1.0049	-0.2605	0.9848	-0.2159	0.8550	-0.1831	0.9632	-0.2826	0.9219	-0.2701
3.490	1.0199	-0.1837	1.0326	-0.1463	0.9641	-0.1121	0.9981	-0.2206	0.9711	-0.2361
3.990	1.0052	-0.1833	1.0237	-0.1569	0.9922	-0.1444	0.9995	-0.2357	0.9732	-0.2294
4.960	1.0000	-0.1253	1.0000	-0.0961	1.0000	-0.0828	1.0000	-0.1601	1.0000	-0.1538

Table K-2. Continued.

F111/MAW BOUNDARY LAYER DATA, FLT 229										
Time	13:04:30.000		13:22:42.000		13:22:42.500		13:22:45.000		13:23:09.000	
	Camber	4/7	Camber	1/4	Camber	1/4	Camber	1/4	Camber	1/4
	QINF =	312.1	QINF =	304.8	QINF =	304.8	QINF =	305.0	QINF =	307.0
	MINF =	0.797	MINF =	0.804	MINF =	0.804	MINF =	0.804	MINF =	0.807
	ALPT =	8.88	ALPT =	5.17	ALPT =	5.17	ALPT =	5.17	ALPT =	5.17
	BETA =	-0.18	BETA =	0.25	BETA =	0.22	BETA =	0.08	BETA =	0.02
	H =	27537.	H =	28478.	H =	28478.	H =	28479.	H =	28471.
	TINF =	-32.6	TINF =	-36.4	TINF =	-36.7	TINF =	-36.8	TINF =	-36.7
	RNPU =	2.4E+06	RNPU =	2.4E+06	RNPU =	2.4E+06	RNPU =	2.4E+06	RNPU =	2.4E+06
	PSUR =	626.7	PSUR =	655.0	PSUR =	655.0	PSUR =	653.9	PSUR =	650.6
	MTOP =	0.89	MTOP =	0.82	MTOP =	0.83	MTOP =	0.83	MTOP =	0.84
Y,in.	U/UTOP	W/UTOP	U/UTOP	W/UTOP	U/UTOP	W/UTOP	U/UTOP	W/UTOP	U/UTOP	W/UTOP
0.240	0.6664	-0.2278	0.5306	-0.3124	0.5302	-0.4205	0.5421	-0.5206	0.5571	-0.4055
0.470	0.7446	-0.0673	0.6572	0.0135	0.6544	0.0148	0.6672	-0.0001	0.6587	0.0182
0.970	0.7898	-0.0642	0.8478	0.0706	0.8319	0.0726	0.8410	0.0711	0.8315	0.0730
1.470	0.8243	-0.2237	0.9707	-0.2118	0.9668	-0.2137	0.9771	-0.2061	0.9662	-0.2016
1.960	0.8284	-0.1300	1.0308	-0.2016	1.0213	-0.2047	1.0275	-0.2035	1.0260	-0.2007
2.330	0.8638	-0.2339	0.9967	-0.1751	0.9909	-0.1566	0.9944	-0.1690	0.9916	-0.1561
2.990	0.8869	-0.2488	1.0051	-0.2550	0.9982	-0.2376	1.0024	-0.2478	0.9924	-0.2406
3.490	0.9479	-0.2193	1.0108	-0.1571	1.0122	-0.1508	1.0174	-0.1587	1.0138	-0.1493
3.990	0.9705	-0.2206	1.0003	-0.1422	1.0014	-0.1488	1.0075	-0.1588	1.0006	-0.1747
4.960	1.0000	-0.1615	1.0000	-0.1016	1.0000	-0.1019	1.0000	-0.1033	1.0000	-0.1005

F111/MAW BOUNDARY LAYER DATA, FLT 229										
Time	13:23:19.500		13:23:20.000		13:23:20.500		13:23:28.000		13:23:28.500	
	Camber	1/5	Camber	1/5	Camber	1/5	Camber	2/6	Camber	2/6
	QINF =	306.6	QINF =	306.4	QINF =	306.1	QINF =	305.0	QINF =	306.2
	MINF =	0.806	MINF =	0.806	MINF =	0.806	MINF =	0.800	MINF =	0.800
	ALPT =	6.02	ALPT =	5.81	ALPT =	6.05	ALPT =	7.06	ALPT =	7.12
	BETA =	-0.70	BETA =	-0.56	BETA =	-0.53	BETA =	-0.27	BETA =	-0.18
	H =	28459.	H =	28459.	H =	28458.	H =	28221.	H =	28166.
	TINF =	-37.0	TINF =	-36.9	TINF =	-36.9	TINF =	-35.6	TINF =	-35.6
	RNPU =	2.4E+06	RNPU =	2.4E+06	RNPU =	2.4E+06	RNPU =	2.4E+06	RNPU =	2.4E+06
	PSUR =	629.8	PSUR =	630.9	PSUR =	625.4	PSUR =	615.6	PSUR =	611.2
	MTOP =	0.87	MTOP =	0.88	MTOP =	0.88	MTOP =	0.86	MTOP =	0.87
Y,in.	U/UTOP	W/UTOP	U/UTOP	W/UTOP	U/UTOP	W/UTOP	U/UTOP	W/UTOP	U/UTOP	W/UTOP
0.240	0.5816	-0.3376	0.5887	-0.3430	0.6126	-0.3005	0.6471	-0.2125	0.6423	-0.2107
0.470	0.6792	-0.0197	0.6883	-0.0248	0.7078	-0.0328	0.7476	-0.0190	0.7263	-0.0081
0.970	0.8204	0.0443	0.8166	0.0497	0.8254	0.0438	0.7864	-0.0109	0.7782	-0.0505
1.470	0.9278	-0.2001	0.9221	-0.1990	0.9418	-0.1968	0.8106	-0.1967	0.8020	-0.1897
1.960	0.9954	-0.1848	0.9921	-0.1871	0.9924	-0.1917	0.8257	-0.0937	0.7945	-0.1005
2.330	0.9887	-0.1553	0.9810	-0.1562	0.9844	-0.1616	0.8315	-0.1335	0.8175	-0.1581
2.990	0.9923	-0.2364	0.9845	-0.2346	0.9899	-0.2444	0.8644	-0.2156	0.8578	-0.2408
3.490	1.0093	-0.1502	0.9917	-0.1654	1.0078	-0.1652	0.9370	-0.1506	0.9200	-0.1285
3.990	1.0000	-0.1654	0.9921	-0.1641	0.9916	-0.1802	0.9467	-0.1937	0.9355	-0.2062
4.960	1.0000	-0.1056	1.0000	-0.1059	1.0000	-0.1159	1.0000	-0.1447	1.0000	-0.1423

Table K-2. Continued.

F111/MAW BOUNDARY LAYER DATA, FLT 229										
Time	13:23:30.500		13:23:31.000		12:54:02.500		12:54:03.000		11:34:59.500	
	Camber	3/6	Camber	3/6	Camber	0/2	Camber	0/2	Camber	0/2
	QINF =	314.8	QINF =	318.5	QINF =	345.1	QINF =	343.5	QINF =	295.0
	MINF =	0.806	MINF =	0.810	MINF =	0.835	MINF =	0.832	MINF =	0.847
	ALPT =	7.94	ALPT =	8.12	ALPT =	9.06	ALPT =	9.47	ALPT =	5.16
	BETA =	0.17	BETA =	0.28	BETA =	0.08	BETA =	0.11	BETA =	0.22
	H =	27878.	H =	27794.	H =	27365.	H =	27351.	H =	31472.
	TINF =	-34.1	TINF =	-34.1	TINF =	-32.3	TINF =	-32.1	TINF =	-50.4
	RNPU =	2.4E+06	RNPU =	2.4E+06	RNPU =	2.5E+06	RNPU =	2.5E+06	RNPU =	2.3E+06
	PSUR =	603.5	PSUR =	627.8	PSUR =	702.5	PSUR =	699.2	PSUR =	571.5
	MTOP =	0.87	MTOP =	0.88	MTOP =	0.84	MTOP =	0.83	MTOP =	0.87
Y,in.	U/UTOP	W/UTOP	U/UTOP	W/UTOP	U/UTOP	W/UTOP	U/UTOP	W/UTOP	U/UTOP	W/UTOP
0.240	0.6645	-0.2246	0.6918	-0.2523	0.6340	-0.1841	0.5910	-0.1348	0.6057	-0.2641
0.470	0.7347	-0.0225	0.7643	-0.0571	0.7179	-0.0370	0.6861	0.0384	0.7253	-0.0236
0.970	0.7531	-0.0697	0.7775	-0.0469	0.7722	0.0374	0.7394	0.0446	0.8744	0.0865
1.470	0.7542	-0.2049	0.7957	-0.2210	0.8137	-0.2103	0.7821	-0.1644	0.9660	-0.1836
1.960	0.7382	-0.0781	0.7968	-0.1114	0.8697	-0.1699	0.8236	-0.1321	1.0171	-0.1935
2.330	0.7546	-0.1474	0.7887	-0.1232	0.8842	-0.1830	0.8515	-0.1739	0.9945	-0.1422
2.990	0.7925	-0.2367	0.8380	-0.2320	0.9250	-0.2414	0.8919	-0.2203	0.9985	-0.2263
3.490	0.8708	-0.1358	0.9166	-0.1925	0.9718	-0.1704	0.9461	-0.1449	1.0032	-0.1176
3.990	0.8912	-0.2050	0.9382	-0.2310	0.9793	-0.1699	0.9435	-0.1388	0.9949	-0.1326
4.960	1.0000	-0.1560	1.0000	-0.1603	1.0000	-0.1197	1.0000	-0.1093	1.0000	-0.0852

F111/MAW BOUNDARY LAYER DATA, FLT 229										
Time	11:35:01.500		11:35:09.500		11:35:36.500		11:35:42.000		11:35:51.000	
	Camber	0/2	Camber	0/2	Camber	0/2	Camber	0/2	Camber	0/2
	QINF =	295.0	QINF =	297.7	QINF =	300.1	QINF =	301.5	QINF =	293.2
	MINF =	0.847	MINF =	0.849	MINF =	0.852	MINF =	0.855	MINF =	0.845
	ALPT =	5.20	ALPT =	5.89	ALPT =	6.02	ALPT =	7.01	ALPT =	8.01
	BETA =	0.19	BETA =	0.19	BETA =	-0.04	BETA =	-0.27	BETA =	0.02
	H =	31461.	H =	31376.	H =	31358.	H =	31394.	H =	31514.
	TINF =	-50.4	TINF =	-50.0	TINF =	-50.4	TINF =	-50.0	TINF =	-50.2
	RNPU =	2.3E+06	RNPU =	2.3E+06	RNPU =	2.3E+06	RNPU =	2.3E+06	RNPU =	2.3E+06
	PSUR =	578.2	PSUR =	577.0	PSUR =	577.0	PSUR =	580.3	PSUR =	578.2
	MTOP =	0.86	MTOP =	0.86	MTOP =	0.86	MTOP =	0.85	MTOP =	0.84
Y,in.	U/UTOP	W/UTOP	U/UTOP	W/UTOP	U/UTOP	W/UTOP	U/UTOP	W/UTOP	U/UTOP	W/UTOP
0.240	0.6010	-0.2498	0.6357	-0.2287	0.6399	-0.2051	0.6751	-0.2312	0.6710	-0.1980
0.470	0.7253	-0.0217	0.7517	-0.0356	0.7471	-0.0354	0.7758	-0.0588	0.7530	-0.0528
0.970	0.8717	0.0933	0.8744	0.0834	0.8660	0.0821	0.8533	0.0688	0.8137	0.0486
1.470	0.9662	-0.1789	0.9547	-0.1956	0.9515	-0.1971	0.9242	-0.2043	0.8688	-0.2131
1.960	1.0218	-0.1944	1.0078	-0.2014	1.0059	-0.2000	0.9799	-0.1963	0.9252	-0.1844
2.330	0.9944	-0.1444	0.9979	-0.1494	0.9940	-0.1500	0.9894	-0.1582	0.9388	-0.1636
2.990	0.9997	-0.2314	1.0030	-0.2385	1.0012	-0.2305	1.0140	-0.2494	0.9796	-0.2630
3.490	1.0076	-0.1225	1.0058	-0.1426	1.0081	-0.1445	1.0250	-0.1338	1.0124	-0.1826
3.990	1.0021	-0.1357	0.9913	-0.1502	1.0104	-0.1410	1.0049	-0.1559	1.0076	-0.1788
4.960	1.0000	-0.0855	1.0000	-0.0917	1.0000	-0.0952	1.0000	-0.1044	1.0000	-0.1124

Table K-2. Continued.

F111/MAW BOUNDARY LAYER DATA, FLT 229										
Time	11:35:52.000		11:37:34.000		11:37:40.000		11:38:11.500		11:38:12.500	
	Camber	0/2	Camber	5/2	Camber	5/2	Camber	5/2	Camber	5/2
	QINF =	294.7	QINF =	297.5	QINF =	297.3	QINF =	297.2	QINF =	297.6
	MINF =	0.847	MINF =	0.844	MINF =	0.844	MINF =	0.845	MINF =	0.846
	ALPT =	8.01	ALPT =	5.70	ALPT =	5.70	ALPT =	6.00	ALPT =	6.02
	BETA =	-0.04	BETA =	0.05	BETA =	-0.01	BETA =	-0.53	BETA =	-0.44
	H =	31494.	H =	31162.	H =	31173.	H =	31206.	H =	31207.
	TINF =	-50.1	TINF =	-49.1	TINF =	-49.1	TINF =	-48.9	TINF =	-48.9
	RNPU =	2.3E+06	RNPU =	2.3E+06	RNPU =	2.3E+06	RNPU =	2.3E+06	RNPU =	2.3E+06
	PSUR =	580.3	PSUR =	584.9	PSUR =	584.9	PSUR =	584.9	PSUR =	580.4
	MTOP =	0.84	MTOP =	0.85	MTOP =	0.83	MTOP =	0.84	MTOP =	0.85
Y,in.	U/UTOP	W/UTOP	U/UTOP	W/UTOP	U/UTOP	W/UTOP	U/UTOP	W/UTOP	U/UTOP	W/UTOP
0.240	0.6574	-0.2843	0.6500	-0.2018	0.6664	-0.2441	0.6568	-0.2143	0.6548	-0.2207
0.470	0.7468	-0.0474	0.7655	-0.0338	0.7760	-0.0340	0.7669	-0.0336	0.7665	-0.0436
0.970	0.8011	0.0553	0.8729	0.0894	0.8839	0.0842	0.8731	0.0806	0.8665	0.0846
1.470	0.8651	-0.2008	0.9430	-0.1857	0.9540	-0.1905	0.9375	-0.1836	0.9293	-0.1820
1.960	0.9143	-0.1869	1.0013	-0.1920	1.0155	-0.1943	0.9924	-0.1920	0.9901	-0.1855
2.330	0.9346	-0.1714	0.9978	-0.1439	1.0094	-0.1470	0.9974	-0.1429	0.9916	-0.1460
2.990	0.9738	-0.2526	1.0093	-0.2336	1.0213	-0.2388	1.0099	-0.2250	1.0090	-0.2390
3.490	1.0077	-0.1631	1.0122	-0.1301	1.0303	-0.1285	1.0182	-0.1270	1.0159	-0.1135
3.990	1.0067	-0.1633	1.0023	-0.1336	1.0158	-0.1326	1.0045	-0.1372	1.0086	-0.1379
4.960	1.0000	-0.1163	1.0000	-0.0947	1.0000	-0.0981	1.0000	-0.0889	1.0000	-0.0867

F111/MAW BOUNDARY LAYER DATA, FLT 229										
Time	11:38:18.500		11:38:22.000		11:38:25.000		11:38:28.500		11:38:33.500	
	Camber	5/2	Camber	5/2	Camber	5/2	Camber	5/2	Camber	5/2
	QINF =	300.1	QINF =	300.3	QINF =	299.3	QINF =	298.6	QINF =	299.0
	MINF =	0.849	MINF =	0.850	MINF =	0.850	MINF =	0.850	MINF =	0.851
	ALPT =	7.10	ALPT =	8.01	ALPT =	8.01	ALPT =	8.01	ALPT =	9.02
	BETA =	-0.33	BETA =	-0.41	BETA =	-0.04	BETA =	-0.18	BETA =	-0.07
	H =	31223.	H =	31257.	H =	31300.	H =	31344.	H =	31367.
	TINF =	-49.1	TINF =	-48.9	TINF =	-49.1	TINF =	-49.4	TINF =	-49.2
	RNPU =	2.3E+06	RNPU =	2.3E+06	RNPU =	2.3E+06	RNPU =	2.3E+06	RNPU =	2.3E+06
	PSUR =	584.9	PSUR =	589.3	PSUR =	587.1	PSUR =	583.7	PSUR =	559.6
	MTOP =	0.84	MTOP =	0.85	MTOP =	0.85	MTOP =	0.87	MTOP =	0.66
Y,in.	U/UTOP	W/UTOP	U/UTOP	W/UTOP	U/UTOP	W/UTOP	U/UTOP	W/UTOP	U/UTOP	W/UTOP
0.240	0.6715	-0.2318	0.5744	-0.1723	0.5951	-0.1755	0.5793	-0.2275	0.3587	-0.0175
0.470	0.7621	-0.0466	0.6824	0.0018	0.6833	0.0135	0.6776	0.0102	0.6040	0.3736
0.970	0.8426	0.0653	0.7458	0.0724	0.7458	0.0589	0.7381	0.0601	0.5879	-0.0828
1.470	0.9026	-0.1979	0.8096	-0.1865	0.8142	-0.1947	0.7944	-0.1975	0.6058	-0.1941
1.960	0.9591	-0.1885	0.8798	-0.1711	0.8803	-0.1689	0.8639	-0.1563	0.6377	-0.0014
2.330	0.9756	-0.1566	0.9097	-0.1602	0.9150	-0.1651	0.8935	-0.1622	0.6281	-0.0744
2.990	1.0081	-0.2474	0.9671	-0.2395	0.9697	-0.2455	0.9492	-0.2415	0.6797	-0.2382
3.490	1.0291	-0.1445	0.9933	-0.1594	1.0030	-0.1579	0.9866	-0.1416	0.8174	-0.0176
3.990	1.0228	-0.1539	0.9991	-0.1719	1.0017	-0.1747	0.9908	-0.1676	0.8225	-0.1236
4.960	1.0000	-0.1044	1.0000	-0.1143	1.0000	-0.1174	1.0000	-0.0974	1.0000	-0.0974

Table K-2. Continued.

F111/MAW BOUNDARY LAYER DATA, FLT 229										
Time	11:35:07.500		11:35:10.500		11:35:11.500		11:35:23.000		11:35:28.500	
	Camber	0/2	Camber	0/2	Camber	0/2	Camber	0/2	Camber	0/2
	QINF =	297.4	QINF =	297.7	QINF =	298.1	QINF =	296.3	QINF =	296.8
	MINF =	0.849	MINF =	0.849	MINF =	0.849	MINF =	0.848	MINF =	0.848
	ALPT =	5.72	ALPT =	5.71	ALPT =	5.72	ALPT =	5.52	ALPT =	5.49
	BETA =	0.28	BETA =	0.19	BETA =	0.25	BETA =	0.11	BETA =	0.08
	H =	31398.	H =	31376.	H =	31365.	H =	31419.	H =	31397.
	TINF =	-50.3	TINF =	-50.0	TINF =	-50.4	TINF =	-50.2	TINF =	-49.9
	RNPU =	2.3E+06	RNPU =	2.3E+06	RNPU =	2.3E+06	RNPU =	2.3E+06	RNPU =	2.3E+06
	PSUR =	578.2	PSUR =	577.0	PSUR =	576.0	PSUR =	578.2	PSUR =	578.2
	MTOP =	0.85	MTOP =	0.86	MTOP =	0.86	MTOP =	0.86	MTOP =	0.86
Y,in.	U/UTOP	W/UTOP	U/UTOP	W/UTOP	U/UTOP	W/UTOP	U/UTOP	W/UTOP	U/UTOP	W/UTOP
0.240	0.6217	-0.2323	0.6270	-0.2385	0.6298	-0.2506	0.6128	-0.2275	0.6087	-0.2357
0.470	0.7437	-0.0379	0.7494	-0.0355	0.7620	-0.0445	0.7344	-0.0247	0.7312	-0.0190
0.970	0.8720	0.0827	0.8715	0.0819	0.8787	0.0830	0.8668	0.0934	0.8690	0.0930
1.470	0.9564	-0.1867	0.9512	-0.1900	0.9651	-0.1937	0.9599	-0.1858	0.9478	-0.1925
1.960	1.0140	-0.2051	1.0061	-0.1982	1.0145	-0.2004	1.0179	-0.1987	1.0221	-0.1909
2.330	0.9990	-0.1461	0.9948	-0.1502	0.9987	-0.1484	0.9955	-0.1457	0.9928	-0.1369
2.990	1.0026	-0.2335	0.9999	-0.2377	1.0069	-0.2265	1.0020	-0.2388	0.9982	-0.2355
3.490	1.0049	-0.1417	1.0051	-0.1470	1.0117	-0.1243	1.0097	-0.1358	1.0049	-0.1287
3.990	1.0077	-0.1397	0.9984	-0.1450	1.0057	-0.1544	1.0052	-0.1553	0.9789	-0.1504
4.960	1.0000	-0.0923	1.0000	-0.0934	1.0000	-0.0988	1.0000	-0.0889	1.0000	-0.0870

F111/MAW BOUNDARY LAYER DATA, FLT 229										
Time	11:35:29.000		11:35:29.500		11:35:37.000		11:35:37.500		11:35:41.500	
	Camber	0/2	Camber	0/2	Camber	0/2	Camber	0/2	Camber	0/2
	QINF =	296.8	QINF =	297.0	QINF =	300.3	QINF =	300.5	QINF =	301.9
	MINF =	0.848	MINF =	0.848	MINF =	0.852	MINF =	0.852	MINF =	0.855
	ALPT =	5.49	ALPT =	5.49	ALPT =	6.02	ALPT =	6.07	ALPT =	6.96
	BETA =	0.19	BETA =	0.22	BETA =	0.02	BETA =	-0.01	BETA =	-0.33
	H =	31397.	H =	31397.	H =	31358.	H =	31347.	H =	31384.
	TINF =	-49.9	TINF =	-49.9	TINF =	-50.1	TINF =	-50.1	TINF =	-50.4
	RNPU =	2.3E+06	RNPU =	2.3E+06	RNPU =	2.3E+06	RNPU =	2.3E+06	RNPU =	2.3E+06
	PSUR =	578.2	PSUR =	578.2	PSUR =	580.3	PSUR =	578.2	PSUR =	579.3
	MTOP =	0.86	MTOP =	0.86	MTOP =	0.86	MTOP =	0.86	MTOP =	0.85
Y,in.	U/UTOP	W/UTOP	U/UTOP	W/UTOP	U/UTOP	W/UTOP	U/UTOP	W/UTOP	U/UTOP	W/UTOP
0.240	0.6096	-0.2360	0.6086	-0.2356	0.6390	-0.2225	0.6438	-0.2245	0.6732	-0.2440
0.470	0.7323	-0.0246	0.7315	-0.0349	0.7527	-0.0428	0.7654	-0.0541	0.7754	-0.0485
0.970	0.8691	0.0866	0.8749	0.0918	0.8767	0.0775	0.8748	0.0788	0.8600	0.0749
1.470	0.9616	-0.1860	0.9690	-0.1740	0.9452	-0.1913	0.9487	-0.1930	0.9172	-0.2122
1.960	1.0183	-0.1956	1.0161	-0.1928	1.0013	-0.2000	1.0022	-0.2014	0.9759	-0.1967
2.330	0.9944	-0.1383	0.9971	-0.1323	0.9957	-0.1514	0.9969	-0.1565	0.9906	-0.1580
2.990	0.9982	-0.2315	0.9961	-0.2295	1.0039	-0.2378	1.0087	-0.2438	1.0141	-0.2536
3.490	1.0026	-0.1357	1.0055	-0.1385	1.0094	-0.1380	1.0145	-0.1399	1.0227	-0.1516
3.990	1.0007	-0.1373	0.9825	-0.1599	1.0023	-0.1456	1.0053	-0.1460	0.9910	-0.1662
4.960	1.0000	-0.0876	1.0000	-0.0883	1.0000	-0.0928	1.0000	-0.0928	1.0000	-0.1023

Table K-2. Continued.

F111/MAW BOUNDARY LAYER DATA, FLT 229										
Time	11:35:42.500		11:35:50.000		11:35:50.500		11:36:01.500		11:36:02.000	
	Camber	0/2	Camber	0/2	Camber	0/2	Camber	0/2	Camber	0/2
	QINF =	301.3	QINF =	292.4	QINF =	292.6	QINF =	310.2	QINF =	311.6
	MINF =	0.854	MINF =	0.844	MINF =	0.844	MINF =	0.860	MINF =	0.861
	ALPT =	7.06	ALPT =	7.92	ALPT =	7.92	ALPT =	8.58	ALPT =	8.67
	BETA =	-0.33	BETA =	0.19	BETA =	0.02	BETA =	0.66	BETA =	0.74
	H =	31394.	H =	31512.	H =	31513.	H =	31038.	H =	31007.
	TINF =	-50.0	TINF =	-50.4	TINF =	-50.1	TINF =	-48.4	TINF =	-47.9
	RNPU =	2.3E+06	RNPU =	2.3E+06	RNPU =	2.3E+06	RNPU =	2.3E+06	RNPU =	2.3E+06
	PSUR =	582.6	PSUR =	577.0	PSUR =	577.0	PSUR =	588.2	PSUR =	577.3
	MTOP =	0.85	MTOP =	0.85	MTOP =	0.84	MTOP =	0.85	MTOP =	0.79
Y,in.	U/UTOP	W/UTOP	U/UTOP	W/UTOP	U/UTOP	W/UTOP	U/UTOP	W/UTOP	U/UTOP	W/UTOP
0.240	0.6662	-0.2282	0.6751	-0.2739	0.6784	-0.2275	0.4083	0.0766	0.3661	-0.0187
0.470	0.7678	-0.0596	0.7656	-0.0528	0.7676	-0.0416	0.5344	0.1376	0.5246	0.2020
0.970	0.8547	0.0625	0.8232	0.0499	0.8266	0.0402	0.5783	0.0602	0.5497	0.0607
1.470	0.9218	-0.1946	0.8848	-0.2060	0.8909	-0.2051	0.6256	-0.1574	0.5662	-0.1647
1.960	0.9727	-0.1962	0.9326	-0.1872	0.9420	-0.1763	0.6826	-0.0675	0.5978	-0.0453
2.330	0.9796	-0.1568	0.9436	-0.1744	0.9498	-0.1763	0.7664	-0.1890	0.6658	-0.1788
2.990	1.0098	-0.2433	0.9814	-0.2566	0.9897	-0.2501	0.8240	-0.2472	0.7257	-0.2286
3.490	1.0181	-0.1624	1.0066	-0.1629	1.0176	-0.1602	0.9079	-0.1234	0.8407	-0.0903
3.990	1.0072	-0.1511	0.9959	-0.1733	1.0165	-0.1644	0.9140	-0.1715	0.8581	-0.1636
4.960	1.0000	-0.0989	1.0000	-0.1076	1.0000	-0.1159	1.0000	-0.1115	1.0000	-0.1156

F111/MAW BOUNDARY LAYER DATA, FLT 229										
Time	11:36:24.500		11:37:33.500		11:37:37.000		11:37:38.000		11:37:38.500	
	Camber	0/2	Camber	5/2	Camber	5/2	Camber	5/2	Camber	5/2
	QINF =	313.7	QINF =	297.7	QINF =	297.0	QINF =	297.3	QINF =	297.3
	MINF =	0.860	MINF =	0.845	MINF =	0.844	MINF =	0.844	MINF =	0.844
	ALPT =	9.15	ALPT =	5.70	ALPT =	5.56	ALPT =	5.53	ALPT =	5.53
	BETA =	-0.15	BETA	0.02	BETA =	0.02	BETA =	0.02	BETA =	-0.04
	H =	30809.	H =	31162.	H =	31172.	H =	31173.	H =	31173.
	TINF =	-46.8	TINF =	-49.2	TINF =	-49.1	TINF =	-49.1	TINF =	-49.1
	RNPU =	2.4E+06	RNPU =	2.3E+06	RNPU =	2.3E+06	RNPU =	2.3E+06	RNPU =	2.3E+06
	PSUR =	572.9	PSUR =	589.3	PSUR =	584.9	PSUR =	584.9	PSUR =	586.0
	MTOP =	0.65	MTOP =	0.85	MTOP =	0.85	MTOP =	0.85	MTOP =	0.85
Y,in.	U/UTOP	W/UTOP	U/UTOP	W/UTOP	U/UTOP	W/UTOP	U/UTOP	W/UTOP	U/UTOP	W/UTOP
0.240	0.3513	-0.0177	0.6377	-0.2081	0.6515	-0.1897	0.6528	-0.2277	0.6520	-0.2127
0.470	0.6105	0.3724	0.7561	-0.0207	0.7709	-0.0315	0.7656	-0.0335	0.7698	-0.0314
0.970	0.5711	-0.1738	0.8615	0.0794	0.8766	0.0902	0.8790	0.0893	0.8757	0.0877
1.470	0.5868	-0.1880	0.9369	-0.1725	0.9424	-0.1846	0.9461	-0.1780	0.9463	-0.1790
1.960	0.5835	-0.0013	0.9873	-0.1873	0.9983	-0.1817	1.0036	-0.1926	1.0083	-0.1866
2.330	0.6175	-0.1305	0.9824	-0.1471	0.9951	-0.1436	0.9981	-0.1440	0.9948	-0.1399
2.990	0.6721	-0.2962	0.9935	-0.2372	1.0052	-0.2326	1.0083	-0.2338	1.0053	-0.2327
3.490	0.8003	-0.0134	1.0034	-0.1655	1.0091	-0.1266	1.0124	-0.1302	1.0096	-0.1298
3.990	0.7342	-0.1126	0.9833	-0.1326	1.0040	-0.1525	1.0078	-0.1337	1.0028	-0.1392
4.960	1.0000	-0.1211	1.0000	-0.0844	1.0000	-0.0900	1.0000	-0.0914	1.0000	-0.0885

Table K-2. Continued.

F111/MAW BOUNDARY LAYER DATA, FLT 229										
Time	11:37:55.000		11:37:55.500		11:38:10.500		11:38:11.000		11:38:12.000	
	Camber	5/2	Camber	5/2	Camber	5/2	Camber	5/2	Camber	5/2
	QINF =	296.6	QINF =	296.6	QINF =	297.2	QINF =	297.2	QINF =	297.4
	MINF =	0.844	MINF =	0.844	MINF =	0.845	MINF =	0.845	MINF =	0.845
	ALPT =	5.71	ALPT =	5.71	ALPT =	5.91	ALPT =	5.91	ALPT =	5.96
	BETA =	-0.01	BETA =	-0.01	BETA =	-0.65	BETA =	-0.56	BETA =	-0.53
	H =	31194.	H =	31194.	H =	31206.	H =	31206.	H =	31207.
	TINF =	-49.0	TINF =	-49.0	TINF =	-48.9	TINF =	-48.9	TINF =	-48.9
	RNPU =	2.3E+06	RNPU =	2.3E+06	RNPU =	2.3E+06	RNPU =	2.3E+06	RNPU =	2.3E+06
	PSUR =	584.9	PSUR =	584.9	PSUR =	580.4	PSUR =	584.9	PSUR =	584.9
	MTOP =	0.85	MTOP =	0.85	MTOP =	0.85	MTOP =	0.84	MTOP =	0.85
Y,in.	U/UTOP	W/UTOP	U/UTOP	W/UTOP	U/UTOP	W/UTOP	U/UTOP	W/UTOP	U/UTOP	W/UTOP
0.240	0.6574	-0.2398	0.6586	-0.2017	0.6638	-0.2312	0.6595	-0.2406	0.6547	-0.2129
0.470	0.7641	-0.0336	0.7730	-0.0315	0.7728	-0.0326	0.7588	-0.0360	0.7659	-0.0436
0.970	0.8710	0.0843	0.8725	0.0879	0.8706	0.0807	0.8716	0.0701	0.8653	0.0788
1.470	0.9416	-0.1843	0.9428	-0.1845	0.9321	-0.1983	0.9358	-0.1870	0.9442	-0.1736
1.960	0.9982	-0.1940	0.9988	-0.1898	1.0015	-0.1937	0.9960	-0.1956	0.9919	-0.1946
2.330	0.9963	-0.1401	0.9957	-0.1462	0.9986	-0.1344	0.9950	-0.1439	0.9936	-0.1473
2.990	1.0059	-0.2347	1.0077	-0.2366	1.0071	-0.2392	1.0100	-0.2342	1.0094	-0.2410
3.490	1.0109	-0.1300	1.0040	-0.1376	1.0122	-0.1178	1.0279	-0.1163	1.0153	-0.1085
3.990	1.0037	-0.1327	1.0002	-0.1405	1.0037	-0.1333	1.0011	-0.1303	1.0022	-0.1303
4.960	1.0000	-0.0907	1.0000	-0.0947	1.0000	-0.0901	1.0000	-0.0889	1.0000	-0.0909

F111/MAW BOUNDARY LAYER DATA, FLT 229										
Time	11:38:13.500		11:38:17.500		11:38:18.000		11:38:19.000		11:38:22.500	
	Camber	5/2	Camber	5/2	Camber	5/2	Camber	5/2	Camber	5/2
	QINF =	297.4	QINF =	299.3	QINF =	299.9	QINF =	300.1	QINF =	299.8
	MINF =	0.845	MINF =	0.848	MINF =	0.849	MINF =	0.850	MINF =	0.850
	ALPT =	6.11	ALPT =	6.91	ALPT =	6.98	ALPT =	7.27	ALPT =	8.04
	BETA =	-0.38	BETA =	-0.44	BETA =	-0.38	BETA =	-0.44	BETA =	-0.36
	H =	31207.	H =	31221.	H =	31223.	H =	31234.	H =	31267.
	TINF =	-48.9	TINF =	-48.6	TINF =	-48.7	TINF =	-48.8	TINF =	-48.8
	RNPU =	2.3E+06	RNPU =	2.3E+06	RNPU =	2.3E+06	RNPU =	2.3E+06	RNPU =	2.3E+06
	PSUR =	584.9	PSUR =	586.0	PSUR =	584.9	PSUR =	586.0	PSUR =	588.2
	MTOP =	0.85	MTOP =	0.84	MTOP =	0.83	MTOP =	0.84	MTOP =	0.85
Y,in.	U/UTOP	W/UTOP	U/UTOP	W/UTOP	U/UTOP	W/UTOP	U/UTOP	W/UTOP	U/UTOP	W/UTOP
0.240	0.6555	-0.2139	0.6768	-0.2362	0.6762	-0.2403	0.6651	-0.2389	0.5908	-0.2056
0.470	0.7733	-0.0411	0.7688	-0.0437	0.7684	-0.0567	0.7524	-0.0279	0.6819	0.0128
0.970	0.8583	0.0735	0.8425	0.0690	0.8430	0.0699	0.8206	0.0550	0.7405	0.0641
1.470	0.9274	-0.1878	0.9095	-0.1946	0.9084	-0.2031	0.8831	-0.2087	0.8085	-0.1804
1.960	0.9840	-0.1920	0.9669	-0.1901	0.9693	-0.1916	0.9544	-0.1888	0.8773	-0.1680
2.330	0.9911	-0.1470	0.9781	-0.1555	0.9855	-0.1564	0.9687	-0.1625	0.9085	-0.1600
2.990	1.0084	-0.2348	1.0101	-0.2444	1.0175	-0.2462	1.0051	-0.2427	0.9633	-0.2434
3.490	1.0147	-0.1347	1.0238	-0.1538	1.0325	-0.1427	1.0275	-0.1497	0.9976	-0.1417
3.990	1.0031	-0.1431	1.0182	-0.1577	1.0408	-0.1522	1.0187	-0.1638	1.0044	-0.1592
4.960	1.0000	-0.0941	1.0000	-0.1010	1.0000	-0.1064	1.0000	-0.1040	1.0000	-0.1047

Table K-2. Continued.

F111/MAW BOUNDARY LAYER DATA, FLT 229										
Time	11:38:24.000		11:38:25.500		11:38:27.000		11:38:28.000		11:38:31.000	
	Camber	5/2	Camber	5/2	Camber	5/2	Camber	5/2	Camber	5/2
	QINF =	299.4	QINF =	299.3	QINF =	298.6	QINF =	298.4	QINF =	299.2
	MINF =	0.850	MINF =	0.850	MINF =	0.849	MINF =	0.849	MINF =	0.851
	ALPT =	8.04	ALPT =	8.01	ALPT =	8.01	ALPT =	8.01	ALPT =	8.20
	BETA =	-0.21	BETA =	-0.07	BETA =	-0.10	BETA =	-0.12	BETA =	-0.10
	H =	31289.	H =	31311.	H =	31333.	H =	31343.	H =	31367.
	TINF =	-48.8	TINF =	-49.1	TINF =	-49.4	TINF =	-49.1	TINF =	-49.3
	RNPU =	2.3E+06	RNPU =	2.3E+06	RNPU =	2.3E+06	RNPU =	2.3E+06	RNPU =	2.3E+06
	PSUR =	589.3	PSUR =	587.1	PSUR =	587.1	PSUR =	589.3	PSUR =	590.3
	MTOP =	0.85	MTOP =	0.85	MTOP =	0.85	MTOP =	0.85	MTOP =	0.85
Y,in.	U/UTOP	W/UTOP	U/UTOP	W/UTOP	U/UTOP	W/UTOP	U/UTOP	W/UTOP	U/UTOP	W/UTOP
0.240	0.5756	-0.2330	0.5972	-0.2075	0.5785	-0.1932	0.5898	-0.2053	0.5513	-0.1991
0.470	0.6659	0.0408	0.6826	0.0134	0.6799	0.0226	0.6773	0.0133	0.6485	0.0772
0.970	0.7301	0.0654	0.7456	0.0645	0.7264	0.0624	0.7412	0.0660	0.7044	0.0568
1.470	0.7954	-0.1855	0.8091	-0.1902	0.8003	-0.1918	0.8273	-0.1771	0.7850	-0.1704
1.960	0.8692	-0.1642	0.8797	-0.1683	0.8606	-0.1764	0.8854	-0.1721	0.8444	-0.1574
2.330	0.9034	-0.1569	0.9111	-0.1658	0.8989	-0.1632	0.9099	-0.1574	0.8859	-0.1630
2.990	0.9575	-0.2399	0.9669	-0.2485	0.9569	-0.2474	0.9647	-0.2547	0.9449	-0.2454
3.490	0.9962	-0.1977	1.0025	-0.1641	0.9919	-0.1622	0.9991	-0.1566	0.9911	-0.2070
3.990	0.9768	-0.1709	1.0000	-0.1697	0.9954	-0.1644	1.0026	-0.1927	0.9960	-0.1705
4.960	1.0000	-0.1067	1.0000	-0.1132	1.0000	-0.1095	1.0000	-0.1115	1.0000	-0.1107

F111/MAW BOUNDARY LAYER DATA, FLT 229										
Time	11:38:31.500		11:38:32.000		11:38:32.500		11:38:33.000		11:38:34.000	
	Camber	5/2	Camber	5/2	Camber	5/2	Camber	5/2	Camber	5/2
	QINF =	299.4	QINF =	299.4	QINF =	299.2	QINF =	299.0	QINF =	299.0
	MINF =	0.851	MINF =	0.851	MINF =	0.851	MINF =	0.851	MINF =	0.851
	ALPT =	8.38	ALPT =	8.78	ALPT =	8.85	ALPT =	8.90	ALPT =	9.08
	BETA =	-0.04	BETA =	0.11	BETA =	0.05	BETA =	0.08	BETA =	-0.10
	H =	31368.	H =	31368.	H =	31367.	H =	31367.	H =	31367.
	TINF =	-49.0	TINF =	-49.3	TINF =	-49.3	TINF =	-49.2	TINF =	-49.2
	RNPU =	2.3E+06	RNPU =	2.3E+06	RNPU =	2.3E+06	RNPU =	2.3E+06	RNPU =	2.3E+06
	PSUR =	586.0	PSUR =	577.2	PSUR =	569.5	PSUR =	564.0	PSUR =	551.9
	MTOP =	0.86	MTOP =	0.81	MTOP =	0.74	MTOP =	0.67	MTOP =	0.62
Y,in.	U/UTOP	W/UTOP	U/UTOP	W/UTOP	U/UTOP	W/UTOP	U/UTOP	W/UTOP	U/UTOP	W/UTOP
0.240	0.4808	-0.4474	0.3431	-0.0502	0.3077	-0.0311	0.3120	-0.0246	0.3846	-0.0503
0.470	0.5760	0.1196	0.5280	0.2625	0.5410	0.3209	0.5806	0.2754	0.6540	0.4442
0.970	0.6282	0.0661	0.5231	0.0355	0.5336	0.0103	0.5552	-0.0320	0.6218	-0.1475
1.470	0.6850	-0.1471	0.5761	-0.1550	0.5554	-0.1535	0.5872	-0.1799	0.6500	-0.1814
1.960	0.7549	-0.1155	0.6228	-0.0656	0.5679	-0.0195	0.5903	0.0030	0.6390	-0.0030
2.330	0.8156	-0.1656	0.6974	-0.1815	0.6256	-0.1362	0.6029	-0.1094	0.6309	-0.0746
2.990	0.8867	-0.2200	0.7610	-0.2121	0.6786	-0.2399	0.6752	-0.4431	0.7294	-0.5914
3.490	0.9500	-0.1485	0.8591	-0.1137	0.8185	-0.0836	0.8091	-0.0163	0.8100	-0.0002
3.990	0.9736	-0.1635	0.8901	-0.1625	0.7941	-0.1312	0.8167	-0.1024	0.7910	-0.1029
4.960	1.0000	-0.1127	1.0000	-0.1117	1.0000	-0.1017	1.0000	-0.1104	1.0000	-0.1083

Table K-2. Continued.

F111/MAW BOUNDARY LAYER DATA, FLT 229										
Time	12:31:28.000		12:31:28.500		12:31:37.000		12:31:42.000		12:31:44.500	
	Camber	0/2	Camber	0/2	Camber	0/2	Camber	0/2	Camber	0/2
	QINF =	302.0	QINF =	302.0	QINF =	301.4	QINF =	301.7	QINF =	301.4
	MINF =	0.902	MINF =	0.902	MINF =	0.899	MINF =	0.898	MINF =	0.897
	ALPT =	5.70	ALPT =	5.70	ALPT =	5.70	ALPT =	6.03	ALPT =	6.11
	BETA =	-0.12	BETA =	0.28	BETA =	0.22	BETA =	0.11	BETA =	-0.01
	H =	33651.	H =	33651.	H =	33556.	H =	33500.	H =	33465.
	TINF =	-59.4	TINF =	-59.7	TINF =	-59.7	TINF =	-59.6	TINF =	-59.4
	RNPU =	2.3E+06	RNPU =	2.3E+06	RNPU =	2.3E+06	RNPU =	2.3E+06	RNPU =	2.3E+06
	PSUR =	533.1	PSUR =	533.1	PSUR =	535.4	PSUR =	537.6	PSUR =	537.6
	MTOP =	0.88	MTOP =	0.88	MTOP =	0.88	MTOP =	0.87	MTOP =	0.87
Y,in.	U/UTOP	W/UTOP	U/UTOP	W/UTOP	U/UTOP	W/UTOP	U/UTOP	W/UTOP	U/UTOP	W/UTOP
0.240	0.5233	-0.4812	0.5231	-0.4810	0.5376	-0.4093	0.5196	-0.5191	0.5189	-0.5184
0.470	0.6441	0.0905	0.6473	0.0685	0.6597	0.0975	0.6354	0.0846	0.6358	0.1041
0.970	0.7806	0.1247	0.7803	0.1247	0.7910	0.1224	0.7587	0.1209	0.7654	0.1186
1.470	0.8911	-0.1729	0.8933	-0.1718	0.9063	-0.1862	0.8750	-0.1791	0.8746	-0.1695
1.960	1.0156	-0.1987	1.0120	-0.2038	1.0252	-0.2027	1.0047	-0.1980	1.0029	-0.1968
2.330	1.0002	-0.1450	1.0017	-0.1414	1.0029	-0.1454	1.0019	-0.1492	1.0011	-0.1575
2.990	1.0045	-0.2377	1.0057	-0.2425	1.0064	-0.2400	1.0084	-0.2471	1.0072	-0.2472
3.490	1.0187	-0.1216	1.0185	-0.1248	1.0200	-0.1352	1.0209	-0.1303	1.0179	-0.1350
3.990	1.0016	-0.1373	1.0062	-0.1338	1.0022	-0.1423	1.0109	-0.1405	1.0217	-0.1299
4.960	1.0000	-0.0831	1.0000	-0.0895	1.0000	-0.0871	1.0000	-0.0943	1.0000	-0.0917

F111/MAW BOUNDARY LAYER DATA, FLT 229										
Time	12:31:58.000		12:31:59.000		12:32:01.000		12:32:01.500		12:32:03.000	
	Camber	0/2	Camber	0/2	Camber	0/2	Camber	0/2	Camber	0/2
	QINF =	300.3	QINF =	300.3	QINF =	298.6	QINF =	297.9	QINF =	297.6
	MINF =	0.895	MINF =	0.895	MINF =	0.893	MINF =	0.892	MINF =	0.892
	ALPT =	6.70	ALPT =	7.27	ALPT =	7.60	ALPT =	7.58	ALPT =	7.23
	BETA =	-0.47	BETA =	-0.33	BETA =	-0.41	BETA =	-0.53	BETA =	-0.15
	H =	33473.	H =	33473.	H =	33490.	H =	33499.	H =	33521.
	TINF =	-59.2	TINF =	-59.2	TINF =	-59.3	TINF =	-59.5	TINF =	-59.5
	RNPU =	2.3E+06	RNPU =	2.3E+06	RNPU =	2.2E+06	RNPU =	2.2E+06	RNPU =	2.2E+06
	PSUR =	536.5	PSUR =	522.2	PSUR =	500.3	PSUR =	504.7	PSUR =	522.3
	MTOP =	0.87	MTOP =	0.91	MTOP =	0.72	MTOP =	0.70	MTOP =	0.90
Y,in.	U/UTOP	W/UTOP	U/UTOP	W/UTOP	U/UTOP	W/UTOP	U/UTOP	W/UTOP	U/UTOP	W/UTOP
0.240	0.4559	0.1368	0.3323	-0.0767	0.2940	-0.0395	0.3014	-0.0533	0.3063	-0.0371
0.470	0.5963	0.1185	0.5305	0.2607	0.6001	0.3587	0.6203	0.4292	0.5147	0.2664
0.970	0.7197	0.1268	0.5674	0.1292	0.5436	0.1488	0.5353	0.1432	0.5275	0.1076
1.470	0.8211	-0.1628	0.6101	-0.1433	0.5290	-0.2087	0.4977	-0.1963	0.5568	-0.1556
1.960	0.9684	-0.1925	0.7010	-0.1011	0.5335	0.0089	0.4966	0.0388	0.6457	-0.0780
2.330	0.9967	-0.1475	0.8273	-0.2473	0.5006	-0.0521	0.4974	-0.0432	0.7089	-0.0416
2.990	1.0081	-0.2309	0.9239	-0.2384	0.5006	-0.2688	0.3389	0.1125	0.8374	-0.2240
3.490	1.0235	-0.1219	0.9958	-0.1017	0.7247	0.0472	0.7314	0.0376	0.9408	-0.1230
3.990	1.0057	-0.1353	0.9960	-0.1523	0.7001	-0.0833	0.7031	-0.0552	0.9820	-0.1431
4.960	1.0000	-0.0862	1.0000	-0.0893	1.0000	-0.0721	1.0000	-0.0823	1.0000	-0.0935

Table K-2. Continued.

F111/MAW BOUNDARY LAYER DATA, FLT 229										
Time	12:32:03.500		12:32:04.000		12:32:05.500		12:32:59.000		12:33:43.500	
	Camber	0/2	Camber	0/2	Camber	0/2	Camber	0/2	Camber	5/2
	QINF =	297.9	QINF =	297.9	QINF =	299.1	QINF =	324.0	QINF =	299.9
	MINF =	0.893	MINF =	0.893	MINF =	0.895	MINF =	0.901	MINF =	0.896
	ALPT =	7.32	ALPT =	7.35	ALPT =	7.58	ALPT =	6.98	ALPT =	6.45
	BETA =	0.05	BETA =	0.31	BETA =	0.25	BETA =	0.05	BETA =	0.05
	H =	33522.	H =	33522.	H =	33537.	H =	32125.	H =	33552.
	TINF =	-59.6	TINF =	-59.2	TINF =	-59.5	TINF =	-53.5	TINF =	-57.4
	RNPU =	2.2E+06	RNPU =	2.2E+06	RNPU =	2.2E+06	RNPU =	2.4E+06	RNPU =	2.2E+06
	PSUR =	520.1	PSUR =	511.3	PSUR =	494.9	PSUR =	550.2	PSUR =	530.0
	MTOP =	0.90	MTOP =	0.90	MTOP =	0.71	MTOP =	0.86	MTOP =	0.90
Y,in.	U/UTOP	W/UTOP	U/UTOP	W/UTOP	U/UTOP	W/UTOP	U/UTOP	W/UTOP	U/UTOP	W/UTOP
0.240	0.2714	-0.0251	0.2676	-0.0531	0.2678	-0.0348	0.2255	-0.0374	0.2972	-0.0463
0.470	0.4902	0.2292	0.5203	0.3063	0.5925	0.3314	0.5114	0.4416	0.5012	0.2900
0.970	0.5124	0.1197	0.5141	0.1051	0.5351	0.1187	0.4564	0.1461	0.5424	0.1391
1.470	0.5299	-0.1571	0.5139	-0.1289	0.5378	-0.2231	0.4404	-0.1385	0.5573	-0.1374
1.960	0.6077	-0.0616	0.5473	-0.0344	0.5286	0.0305	0.5111	-0.0122	0.6693	-0.0851
2.330	0.6779	-0.0805	0.6243	-0.1189	0.5300	-0.0843	0.5280	0.0153	0.7856	-0.1632
2.990	0.8005	-0.2375	0.7322	-0.2247	0.4123	0.3243	0.6485	-0.1919	0.9009	-0.2339
3.490	0.9120	-0.0956	0.8765	-0.0612	0.7345	0.0698	0.8218	-0.0729	0.9782	-0.1182
3.990	0.9444	-0.1353	0.9025	-0.1310	0.6764	-0.0480	0.9127	-0.1146	0.9865	-0.1316
4.960	1.0000	-0.0983	1.0000	-0.0972	1.0000	-0.0992	1.0000	-0.0729	1.0000	-0.0873

F111/MAW BOUNDARY LAYER DATA, FLT 229										
Time	12:33:44.000		12:33:50.000		12:33:50.500		12:33:51.500		12:33:52.500	
	Camber	5/2	Camber	5/2	Camber	5/2	Camber	5/2	Camber	5/2
	QINF =	299.9	QINF =	299.6	QINF =	299.6	QINF =	300.2	QINF =	300.6
	MINF =	0.896	MINF =	0.897	MINF =	0.897	MINF =	0.898	MINF =	0.899
	ALPT =	6.43	ALPT =	5.83	ALPT =	5.83	ALPT =	5.71	ALPT =	5.83
	BETA =	-0.04	BETA =	-0.15	BETA =	-0.21	BETA =	-0.04	BETA =	-0.04
	H =	33552.	H =	33585.	H =	33596.	H =	33598.	H =	33611.
	TINF =	-57.4	TINF =	-57.8	TINF =	-57.5	TINF =	-57.6	TINF =	-57.7
	RNPU =	2.2E+06	RNPU =	2.2E+06	RNPU =	2.2E+06	RNPU =	2.2E+06	RNPU =	2.2E+06
	PSUR =	523.4	PSUR =	542.0	PSUR =	539.9	PSUR =	541.0	PSUR =	535.4
	MTOP =	0.90	MTOP =	0.87	MTOP =	0.87	MTOP =	0.87	MTOP =	0.88
Y,in.	U/UTOP	W/UTOP	U/UTOP	W/UTOP	U/UTOP	W/UTOP	U/UTOP	W/UTOP	U/UTOP	W/UTOP
0.240	0.2729	-0.0523	0.4418	-0.0652	0.4686	-0.2029	0.4726	0.3071	0.4340	-0.0321
0.470	0.5119	0.4025	0.5916	0.1882	0.6032	0.1402	0.6249	0.1351	0.5850	0.2108
0.970	0.5029	0.1389	0.6936	0.1358	0.7070	0.1328	0.7173	0.1383	0.6844	0.1367
1.470	0.5060	-0.1220	0.7774	-0.1631	0.7805	-0.1830	0.8207	-0.1466	0.7664	-0.1645
1.960	0.5798	-0.0506	0.9286	-0.1712	0.9369	-0.1674	0.9558	-0.1706	0.9163	-0.1644
2.330	0.6849	-0.1668	0.9719	-0.1156	0.9812	-0.1217	0.9880	-0.1194	0.9693	-0.1337
2.990	0.7990	-0.2201	0.9960	-0.2364	0.9956	-0.2338	1.0039	-0.2343	0.9908	-0.2312
3.490	0.9156	-0.0831	1.0113	-0.1094	1.0168	-0.1032	1.0198	-0.1114	1.0054	-0.1043
3.990	0.9588	-0.0994	1.0020	-0.1244	1.0058	-0.1249	1.0035	-0.1238	1.0012	-0.1210
4.960	1.0000	-0.0878	1.0000	-0.0837	1.0000	-0.0754	1.0000	-0.0779	1.0000	-0.0752

Table K-2. Continued.

F111/MAW BOUNDARY LAYER DATA, FLT 229										
Time	12:33:53.000		12:33:58.000		12:34:06.000		12:34:07.000		12:34:07.500	
	Camber	5/2	Camber	5/2	Camber	5/2	Camber	5/2	Camber	5/2
	QINF =	301.1	QINF =	302.1	QINF =	304.0	QINF =	304.0	QINF =	304.0
	MINF =	0.899	MINF =	0.901	MINF =	0.904	MINF =	0.904	MINF =	0.904
	ALPT =	5.79	ALPT =	6.06	ALPT =	6.38	ALPT =	6.33	ALPT =	6.42
	BETA =	-0.01	BETA =	0.02	BETA =	-0.18	BETA =	-0.07	BETA =	-0.36
	H =	33613.	H =	33628.	H =	33622.	H =	33622.	H =	33622.
	TINF =	-57.8	TINF =	-57.7	TINF =	-57.7	TINF =	-58.1	TINF =	-57.7
	RNPU =	2.2E+06	RNPU =	2.2E+06	RNPU =	2.2E+06	RNPU =	2.3E+06	RNPU =	2.2E+06
	PSUR =	536.5	PSUR =	528.8	PSUR =	511.3	PSUR =	510.2	PSUR =	513.5
	MTOP =	0.88	MTOP =	0.90	MTOP =	0.83	MTOP =	0.86	MTOP =	0.88
Y,in.	U/UTOP	W/UTOP	U/UTOP	W/UTOP	U/UTOP	W/UTOP	U/UTOP	W/UTOP	U/UTOP	W/UTOP
0.240	0.4340	-0.1826	0.2620	-0.0482	0.2202	-0.0278	0.2392	-0.0335	0.2210	-0.0293
0.470	0.5979	0.1416	0.4906	0.3370	0.5583	0.4866	0.5203	0.4226	0.4901	0.3125
0.970	0.6830	0.1379	0.5149	0.1522	0.4735	0.1586	0.4862	0.1613	0.4585	0.1663
1.470	0.7629	-0.1575	0.5197	-0.1302	0.4154	-0.2030	0.4140	-0.2537	0.4070	-0.1550
1.960	0.9121	-0.1575	0.6384	-0.0725	0.4434	0.0085	0.4450	0.0104	0.4460	0.0083
2.330	0.9732	-0.1280	0.7345	-0.0790	0.4287	-0.0251	0.4310	0.0019	0.4530	-0.0112
2.990	0.9909	-0.2297	0.8806	-0.2159	0.5191	-0.2972	0.5301	-0.2735	0.5578	-0.2245
3.490	1.0079	-0.1169	0.9736	-0.1052	0.6971	0.0347	0.7087	-0.0071	0.7129	-0.0097
3.990	1.0006	-0.1243	0.9860	-0.1099	0.7589	-0.0774	0.7769	-0.0838	0.8103	-0.0967
4.960	1.0000	-0.0867	1.0000	-0.0813	1.0000	-0.0853	1.0000	-0.0891	1.0000	-0.0760

F111/MAW BOUNDARY LAYER DATA, FLT 229										
Time	12:34:12.500		12:34:13.500		12:34:22.000		12:34:22.500		12:34:23.000	
	Camber	5/2	Camber	5/2	Camber	5/2	Camber	5/2	Camber	5/2
	QINF =	304.0	QINF =	303.8	QINF =	303.3	QINF =	303.3	QINF =	303.1
	MINF =	0.904	MINF =	0.904	MINF =	0.904	MINF =	0.904	MINF =	0.903
	ALPT =	6.33	ALPT =	6.32	ALPT =	6.33	ALPT =	6.59	ALPT =	6.80
	BETA =	-0.24	BETA =	0.45	BETA =	-0.62	BETA =	-0.47	BETA =	-0.38
	H =	33646.	H =	33646.	H =	33667.	H =	33656.	H =	33655.
	TINF =	-58.1	TINF =	-58.1	TINF =	-58.4	TINF =	-58.3	TINF =	-58.6
	RNPU =	2.3E+06	RNPU =	2.2E+06	RNPU =	2.2E+06	RNPU =	2.2E+06	RNPU =	2.3E+06
	PSUR =	510.2	PSUR =	513.5	PSUR =	510.1	PSUR =	495.8	PSUR =	492.5
	MTOP =	0.84	MTOP =	0.88	MTOP =	0.92	MTOP =	0.83	MTOP =	0.66
Y,in.	U/UTOP	W/UTOP	U/UTOP	W/UTOP	U/UTOP	W/UTOP	U/UTOP	W/UTOP	U/UTOP	W/UTOP
0.240	0.2287	-0.0288	0.2182	-0.0333	0.2696	-0.0338	0.3028	-0.0469	0.3132	-0.0894
0.470	0.5018	0.3079	0.4898	0.3280	0.5061	0.3728	0.5341	0.3338	0.6410	0.4209
0.970	0.4717	0.1429	0.4790	0.1572	0.5016	0.1486	0.5329	0.1430	0.6227	0.1691
1.470	0.4339	-0.1621	0.4053	-0.1859	0.4558	-0.1551	0.4716	-0.1761	0.5515	-0.2086
1.960	0.4350	0.0106	0.4534	0.0018	0.5158	-0.0242	0.4949	0.0128	0.5130	0.0440
2.330	0.4301	-0.0338	0.4609	-0.0042	0.6064	-0.1810	0.5144	-0.2152	0.5080	-0.1964
2.990	0.5306	-0.3317	0.5730	-0.2149	0.7202	-0.2074	0.5819	-0.3286	0.4457	0.1055
3.490	0.6966	0.0057	0.7397	-0.0720	0.8740	-0.0645	0.7593	-0.0125	0.7571	0.0548
3.990	0.7647	-0.0859	0.8297	-0.0877	0.9096	-0.1112	0.7443	-0.0700	0.5680	-0.0379
4.960	1.0000	-0.0932	1.0000	-0.0888	1.0000	-0.0806	1.0000	-0.0886	1.0000	-0.1101

Table K-2. Continued.

F111/MAW BOUNDARY LAYER DATA, FLT 229										
Time	12:31:41.500		12:31:45.500		12:31:58.500		12:33:38.500		12:33:39.500	
	Camber	0/2	Camber	0/2	Camber	0/2	Camber	5/2	Camber	5/2
	QINF =	301.7	QINF =	301.2	QINF =	300.3	QINF =	299.0	QINF =	299.2
	MINF =	0.898	MINF =	0.896	MINF =	0.895	MINF =	0.895	MINF =	0.896
	ALPT =	6.00	ALPT =	6.02	ALPT =	6.99	ALPT =	6.06	ALPT =	5.98
	BETA =	-0.04	BETA =	-0.27	BETA =	-0.12	BETA =	-0.10	BETA =	-0.21
	H =	33500.	H =	33464.	H =	33473.	H =	33572.	H =	33572.
	TINF =	-59.2	TINF =	-59.4	TINF =	-59.2	TINF =	-57.6	TINF =	-57.7
	RNPU =	2.3E+06	RNPU =	2.3E+06	RNPU =	2.3E+06	RNPU =	2.2E+06	RNPU =	2.2E+06
	PSUR =	536.5	PSUR =	541.0	PSUR =	534.3	PSUR =	535.4	PSUR =	535.4
	MTOP =	0.89	MTOP =	0.87	MTOP =	0.88	MTOP =	0.88	MTOP =	0.89
Y,in.	U/UTOP	W/UTOP	U/UTOP	W/UTOP	U/UTOP	W/UTOP	U/UTOP	W/UTOP	U/UTOP	W/UTOP
0.240	0.5186	-0.3663	0.5298	-0.2810	0.4088	-0.2136	0.4027	-0.3261	0.4100	-0.0498
0.470	0.6399	0.0899	0.6360	0.0938	0.5800	0.1917	0.5797	0.1491	0.5697	0.2041
0.970	0.7646	0.1157	0.7724	0.1118	0.6641	0.1276	0.6568	0.1339	0.6734	0.1371
1.470	0.8747	-0.1777	0.8834	-0.1849	0.7560	-0.1641	0.7318	-0.1485	0.7537	-0.1547
1.960	0.9959	-0.1952	1.0092	-0.2028	0.8983	-0.1663	0.8720	-0.1525	0.8955	-0.1619
2.330	0.9893	-0.1473	0.9967	-0.1544	0.9709	-0.1481	0.9531	-0.1295	0.9571	-0.1325
2.990	0.9957	-0.2440	1.0060	-0.2419	0.9980	-0.2360	0.9907	-0.2295	0.9876	-0.2417
3.490	1.0082	-0.1319	1.0160	-0.1286	1.0258	-0.1110	1.0100	-0.1127	1.0126	-0.1136
3.990	0.9912	-0.1168	1.0055	-0.1443	1.0050	-0.1665	0.9894	-0.1413	1.0170	-0.1162
4.960	1.0000	-0.0852	1.0000	-0.1018	1.0000	-0.0915	1.0000	-0.0884	1.0000	-0.0881

F111/MAW BOUNDARY LAYER DATA, FLT 229										
Time	12:33:49.500		12:34:02.000		12:34:15.500		12:34:23.500		12:31:46.000	
	Camber	5/2	Camber	5/2	Camber	5/2	Camber	5/2	Camber	0/2
	QINF =	299.4	QINF =	303.6	QINF =	303.5	QINF =	302.9	QINF =	300.7
	MINF =	0.896	MINF =	0.903	MINF =	0.904	MINF =	0.903	MINF =	0.896
	ALPT =	6.00	ALPT =	6.02	ALPT =	6.00	ALPT =	6.92	ALPT =	5.93
	BETA =	-0.01	BETA =	0.14	BETA =	-0.10	BETA =	-0.44	BETA =	-0.10
	H =	33584.	H =	33632.	H =	33656.	H =	33643.	H =	33463.
	TINF =	-57.8	TINF =	-58.0	TINF =	-58.4	TINF =	-58.2	TINF =	-59.3
	RNPU =	2.2E+06	RNPU =	2.2E+06	RNPU =	2.2E+06	RNPU =	2.2E+06	RNPU =	2.3E+06
	PSUR =	542.0	PSUR =	522.2	PSUR =	525.5	PSUR =	483.7	PSUR =	535.4
	MTOP =	0.87	MTOP =	0.92	MTOP =	0.91	MTOP =	0.53	MTOP =	0.88
Y,in.	U/UTOP	W/UTOP	U/UTOP	W/UTOP	U/UTOP	W/UTOP	U/UTOP	W/UTOP	U/UTOP	W/UTOP
0.240	0.3829	-0.1062	0.2477	-0.0382	0.2610	-0.0461	0.4174	-0.0800	0.5708	-0.5681
0.470	0.5496	0.2203	0.4914	0.3096	0.4923	0.3417	0.8184	0.4935	0.6633	0.0725
0.970	0.6354	0.1396	0.5034	0.1498	0.5086	0.1503	0.7722	0.2213	0.7833	0.1210
1.470	0.7226	-0.1425	0.4824	-0.1181	0.5087	-0.1142	0.7178	-0.2943	0.8955	-0.1962
1.960	0.8692	-0.1498	0.5756	-0.0494	0.6147	-0.0553	0.6615	0.0557	1.0067	-0.2059
2.330	0.9435	-0.1162	0.6737	-0.1027	0.7064	-0.0751	0.5886	-0.1000	0.9996	-0.1553
2.990	0.9900	-0.2269	0.8128	-0.2085	0.8520	-0.2225	0.4934	-0.0122	1.0049	-0.2504
3.490	1.0098	-0.1092	0.9360	-0.0967	0.9778	-0.0939	0.8123	0.0889	1.0183	-0.1318
3.990	1.0008	-0.1262	0.9808	-0.1184	0.9875	-0.1241	0.4757	0.0302	1.0099	-0.1400
4.960	1.0000	-0.0831	1.0000	-0.0810	1.0000	-0.0766	1.0000	-0.1053	1.0000	-0.1002

Table K-2. Continued.

F111/MAW BOUNDARY LAYER DATA, FLT 229										
Time	12:31:54.000		12:31:57.000		12:33:57.000		12:33:59.000		12:34:01.000	
	Camber	0/2	Camber	0/2	Camber	5/2	Camber	5/2	Camber	5/2
	QINF =	300.8	QINF =	300.5	QINF =	302.1	QINF =	302.3	QINF =	303.1
	MINF =	0.895	MINF =	0.896	MINF =	0.901	MINF =	0.902	MINF =	0.903
	ALPT =	5.97	ALPT =	6.02	ALPT =	6.08	ALPT =	5.97	ALPT =	5.97
	BETA =	0.11	BETA =	-0.65	BETA =	-0.07	BETA =	-0.27	BETA =	-0.10
	H =	33451.	H =	33473.	H =	33628.	H =	33628.	H =	33631.
	TINF =	-59.3	TINF =	-59.3	TINF =	-57.7	TINF =	-58.1	TINF =	-57.6
	RNPU =	2.3E+06	RNPU =	2.3E+06	RNPU =	2.2E+06	RNPU =	2.2E+06	RNPU =	2.2E+06
	PSUR =	531.0	PSUR =	533.2	PSUR =	526.6	PSUR =	533.3	PSUR =	527.7
	MTOP =	0.88	MTOP =	0.87	MTOP =	0.91	MTOP =	0.90	MTOP =	0.90
Y,in.	U/UTOP	W/UTOP	U/UTOP	W/UTOP	U/UTOP	W/UTOP	U/UTOP	W/UTOP	U/UTOP	W/UTOP
0.240	0.4385	0.3076	0.5555	-0.3364	0.2971	-0.0624	0.2633	-0.0597	0.2819	-0.0489
0.470	0.6586	0.0784	0.6768	0.0825	0.5138	0.2953	0.4935	0.2945	0.5123	0.3450
0.970	0.7670	0.1200	0.7974	0.1191	0.5639	0.1396	0.5520	0.1520	0.5476	0.1488
1.470	0.8828	-0.1821	0.9029	-0.1839	0.5690	-0.1111	0.5655	-0.1105	0.5445	-0.1238
1.960	1.0058	-0.1974	1.0278	-0.2086	0.6862	-0.0873	0.6921	-0.0919	0.6557	-0.0765
2.330	1.0037	-0.1519	1.0049	-0.1346	0.7987	-0.0947	0.8141	-0.0973	0.7745	-0.1257
2.990	1.0066	-0.2455	1.0100	-0.2384	0.9224	-0.2296	0.9333	-0.2256	0.9050	-0.2225
3.490	1.0277	-0.1222	1.0293	-0.0901	0.9886	-0.1159	0.9947	-0.1348	0.9870	-0.1130
3.990	1.0069	-0.1373	1.0116	-0.1373	0.9922	-0.1273	0.9946	-0.1214	0.9946	-0.1226
4.960	1.0000	-0.0913	1.0000	-0.0894	1.0000	-0.0843	1.0000	-0.0809	1.0000	-0.0843

F111/MAW BOUNDARY LAYER DATA, FLT 229										
Time	12:34:01.500		11:42:02.500		11:42:03.000		11:42:03.500		11:42:04.000	
	Camber	5/2	Camber	0/2	Camber	0/2	Camber	0/2	Camber	0/2
	QINF =	303.4	QINF =	301.6	QINF =	301.4	QINF =	301.4	QINF =	301.4
	MINF =	0.903	MINF =	0.951	MINF =	0.950	MINF =	0.950	MINF =	0.950
	ALPT =	6.02	ALPT =	6.50	ALPT =	6.47	ALPT =	6.36	ALPT =	6.14
	BETA =	0.08	BETA =	0.22	BETA =	0.34	BETA =	0.37	BETA =	0.25
	H =	33632.	H =	35906.	H =	35905.	H =	35905.	H =	35905.
	TINF =	-58.0	TINF =	-67.1	TINF =	-67.4	TINF =	-67.1	TINF =	-67.4
	RNPU =	2.2E+06	RNPU =	2.2E+06	RNPU =	2.2E+06	RNPU =	2.2E+06	RNPU =	2.2E+06
	PSUR =	524.4	PSUR =	392.2	PSUR =	395.5	PSUR =	391.0	PSUR =	397.6
	MTOP =	0.91	MTOP =	1.11	MTOP =	1.10	MTOP =	1.11	MTOP =	1.09
Y,in.	U/UTOP	W/UTOP	U/UTOP	W/UTOP	U/UTOP	W/UTOP	U/UTOP	W/UTOP	U/UTOP	W/UTOP
0.240	0.2819	-0.0421	0.2136	-0.0440	0.1621	-0.0163	0.2308	-0.0374	0.2233	-0.0295
0.470	0.4859	0.2708	0.4413	0.2084	0.4217	0.2345	0.4562	0.3079	0.4621	0.2284
0.970	0.5256	0.1549	0.4623	0.0068	0.4042	0.0135	0.4466	0.1139	0.4929	0.0637
1.470	0.5250	-0.1295	0.4958	-0.0906	0.4628	-0.0861	0.4777	-0.1025	0.5085	-0.0916
1.960	0.6415	-0.0711	0.5953	-0.0354	0.5554	-0.0312	0.5740	-0.0243	0.6062	-0.0475
2.330	0.7368	-0.1004	0.7133	-0.0221	0.6758	-0.0186	0.6870	-0.0161	0.7001	-0.0104
2.990	0.8760	-0.2166	0.8518	-0.1869	0.8221	-0.1995	0.8319	-0.1727	0.8390	-0.1890
3.490	0.9741	-0.1444	0.9560	-0.0937	0.9415	-0.0908	0.9444	-0.1003	0.9478	-0.0839
3.990	0.9896	-0.1247	0.9925	-0.1377	0.9876	-0.1294	0.9795	-0.1356	0.9904	-0.1325
4.960	1.0000	-0.0846	1.0000	-0.0686	1.0000	-0.0612	1.0000	-0.0654	1.0000	-0.0677

Table K-2. Continued.

F111/MAW BOUNDARY LAYER DATA, FLT 229										
Time	11:42:04.500		11:42:05.000		11:42:05.500		11:42:06.500		11:42:07.000	
	Camber	0/2	Camber	0/2	Camber	0/2	Camber	0/2	Camber	0/2
	QINF =	301.4	QINF =	301.4	QINF =	301.4	QINF =	301.4	QINF =	301.4
	MINF =	0.950	MINF =	0.950	MINF =	0.950	MINF =	0.950	MINF =	0.950
	ALPT =	6.10	ALPT =	6.00	ALPT =	5.98	ALPT =	6.10	ALPT =	6.07
	BETA =	0.34	BETA =	0.22	BETA =	0.25	BETA =	0.22	BETA =	0.28
	H =	35905.	H =	35917.	H =	35917.	H =	35917.	H =	35917.
	TINF =	-67.1	TINF =	-67.4	TINF =	-67.1	TINF =	-67.1	TINF =	-67.1
	RNPU =	2.2E+06	RNPU =	2.2E+06	RNPU =	2.2E+06	RNPU =	2.2E+06	RNPU =	2.2E+06
	PSUR =	400.9	PSUR =	398.8	PSUR =	397.6	PSUR =	398.8	PSUR =	399.8
	MTOP =	1.09	MTOP =	1.09	MTOP =	1.09	MTOP =	1.10	MTOP =	1.10
Y,in.	U/UTOP	W/UTOP	U/UTOP	W/UTOP	U/UTOP	W/UTOP	U/UTOP	W/UTOP	U/UTOP	W/UTOP
0.240	0.2048	-0.0147	0.2050	-0.0273	0.2282	-0.0393	0.2311	-0.0398	0.2198	-0.0461
0.470	0.4308	0.2730	0.4487	0.3113	0.4409	0.2210	0.4466	0.2701	0.4452	0.2248
0.970	0.4256	0.0870	0.4149	0.0734	0.4077	0.1301	0.4337	0.1083	0.4431	0.0904
1.470	0.4493	-0.1012	0.4366	-0.0998	0.4292	-0.1452	0.4786	-0.1032	0.4815	-0.1076
1.960	0.5320	-0.0247	0.5315	-0.0110	0.5138	-0.0192	0.5708	-0.0249	0.5625	-0.0254
2.330	0.6541	-0.0225	0.6391	-0.0204	0.6390	-0.0214	0.6696	0.0063	0.6669	-0.0098
2.990	0.8079	-0.1801	0.7994	-0.1809	0.8014	-0.1762	0.8286	-0.1689	0.8212	-0.1871
3.490	0.9286	-0.0890	0.9395	-0.0796	0.9399	-0.0836	0.9397	-0.0884	0.9437	-0.0772
3.990	0.9641	-0.1494	0.9873	-0.1408	0.9895	-0.1354	0.9830	-0.1336	0.9846	-0.1328
4.960	1.0000	-0.0662	1.0000	-0.0630	1.0000	-0.0649	1.0000	-0.0622	1.0000	-0.0671

F111/MAW BOUNDARY LAYER DATA, FLT 229										
Time	11:42:15.500		11:42:16.500		11:42:28.000		11:42:28.500		11:42:29.000	
	Camber	0/2	Camber	0/2	Camber	0/2	Camber	0/2	Camber	0/2
	QINF =	300.4	QINF =	300.4	QINF =	301.0	QINF =	301.0	QINF =	301.0
	MINF =	0.949	MINF =	0.949	MINF =	0.950	MINF =	0.950	MINF =	0.950
	ALPT =	6.06	ALPT =	6.10	ALPT =	6.38	ALPT =	6.44	ALPT =	6.61
	BETA =	0.22	BETA =	0.31	BETA =	-0.15	BETA =	-0.12	BETA =	-0.07
	H =	35911.	H =	35911.	H =	35915.	H =	35915.	H =	35915.
	TINF =	-66.9	TINF =	-67.2	TINF =	-67.3	TINF =	-67.0	TINF =	-67.0
	RNPU =	2.2E+06	RNPU =	2.2E+06	RNPU =	2.2E+06	RNPU =	2.2E+06	RNPU =	2.2E+06
	PSUR =	404.2	PSUR =	400.9	PSUR =	400.9	PSUR =	395.5	PSUR =	394.4
	MTOP =	1.08	MTOP =	1.08	MTOP =	1.09	MTOP =	1.10	MTOP =	1.10
Y,in.	U/UTOP	W/UTOP	U/UTOP	W/UTOP	U/UTOP	W/UTOP	U/UTOP	W/UTOP	U/UTOP	W/UTOP
0.240	0.1516	-0.0168	0.2046	-0.0208	0.1483	-0.0187	0.2066	-0.0177	0.2160	-0.0218
0.470	0.4300	0.2692	0.4239	0.2531	0.4224	0.2416	0.4413	0.2524	0.4459	0.2551
0.970	0.3842	0.1217	0.3994	0.1265	0.3903	0.0845	0.4377	0.0084	0.4113	-0.0213
1.470	0.3883	-0.1162	0.3929	-0.1243	0.4242	-0.0944	0.4369	-0.1334	0.4393	-0.1246
1.960	0.4449	-0.0002	0.4646	0.0025	0.4507	0.0478	0.4908	-0.0082	0.4889	-0.0002
2.330	0.5298	0.0112	0.5406	0.0097	0.5544	-0.0004	0.5716	-0.0013	0.5648	0.0001
2.990	0.6857	-0.1511	0.6940	-0.1669	0.7075	-0.1588	0.7168	-0.1714	0.7118	-0.1640
3.490	0.8713	-0.0502	0.8755	-0.0616	0.8789	-0.0991	0.8751	-0.0643	0.8772	-0.0564
3.990	0.9586	-0.1221	0.9558	-0.1304	0.9625	-0.1486	0.9568	-0.1214	0.9510	-0.1266
4.960	1.0000	-0.0509	1.0000	-0.0604	1.0000	-0.0615	1.0000	-0.0564	1.0000	-0.0558

Table K-2. Continued.

F111/MAW BOUNDARY LAYER DATA, FLT 229										
Time	11:42:29.500		11:42:31.000		11:42:31.500		11:42:32.000		11:42:32.500	
	Camber	0/2	Camber	0/2	Camber	0/2	Camber	0/2	Camber	0/2
	QINF =	300.8	QINF =	300.6	QINF =	300.6	QINF =	300.6	QINF =	300.6
	MINF =	0.949	MINF =	0.949	MINF =	0.949	MINF =	0.949	MINF =	0.949
	ALPT =	6.56	ALPT =	6.86	ALPT =	6.95	ALPT =	7.08	ALPT =	7.16
	BETA =	-0.01	BETA =	0.05	BETA =	0.05	BETA =	0.05	BETA =	0.02
	H =	35913.	H =	35901.	H =	35912.	H =	35912.	H =	35912.
	TINF =	-67.0	TINF =	-66.9	TINF =	-66.9	TINF =	-66.3	TINF =	-66.9
	RNPU =	2.2E+06	RNPU =	2.2E+06	RNPU =	2.2E+06	RNPU =	2.2E+06	RNPU =	2.2E+06
	PSUR =	394.4	PSUR =	386.7	PSUR =	387.8	PSUR =	384.6	PSUR =	382.3
	MTOP =	1.10	MTOP =	1.11	MTOP =	1.11	MTOP =	1.11	MTOP =	1.11
Y,in.	U/UTOP	W/UTOP	U/UTOP	W/UTOP	U/UTOP	W/UTOP	U/UTOP	W/UTOP	U/UTOP	W/UTOP
0.240	0.1683	-0.0142	0.2110	-0.0093	0.1763	-0.0326	0.2601	-0.0242	0.2047	-0.0115
0.470	0.4280	0.2365	0.4364	0.2739	0.4309	0.2704	0.4548	0.1970	0.4387	0.2170
0.970	0.3953	-0.0383	0.6037	0.2366	0.3524	0.1687	0.3855	0.2214	0.2860	0.0957
1.470	0.3945	-0.1341	0.4177	-0.1311	0.3975	-0.1236	0.4230	-0.1456	0.4074	-0.1254
1.960	0.4380	0.0042	0.4652	0.0086	0.4334	0.0162	0.4810	0.0076	0.4419	0.0179
2.330	0.5208	-0.0018	0.5252	0.0133	0.5021	0.0128	0.5316	0.0051	0.5024	0.0067
2.990	0.6665	-0.1533	0.6601	-0.1434	0.6497	-0.1541	0.6736	-0.1456	0.6312	-0.1422
3.490	0.8522	-0.0518	0.8372	-0.0394	0.8423	-0.0339	0.8411	-0.0441	0.8046	-0.0336
3.990	0.9414	-0.1235	0.9201	-0.1108	0.9322	-0.1205	0.9319	-0.1220	0.9119	-0.1182
4.960	1.0000	-0.0534	1.0000	-0.0552	1.0000	-0.0536	1.0000	-0.0481	1.0000	-0.0571

F111/MAW BOUNDARY LAYER DATA, FLT 229										
Time	14:04:24.500		14:04:25.000		14:04:26.000		14:04:27.000		14:04:36.500	
	Camber	0/2	Camber	0/2	Camber	0/2	Camber	0/2	Camber	0/2
	QINF =	449.5	QINF =	449.5	QINF =	449.8	QINF =	450.0	QINF =	452.1
	MINF =	0.802	MINF =	0.802	MINF =	0.802	MINF =	0.803	MINF =	0.804
	ALPT =	3.95	ALPT =	4.01	ALPT =	4.04	ALPT =	4.01	ALPT =	4.04
	BETA =	0.34	BETA =	0.22	BETA =	0.25	BETA =	0.28	BETA =	0.37
	H =	19366.	H =	19377.	H =	19378.	H =	19378.	H =	19347.
	TINF =	2.7	TINF =	3.0	TINF =	2.7	TINF =	2.6	TINF =	2.8
	RNPU =	3.1E+06	RNPU =	3.1E+06	RNPU =	3.1E+06	RNPU =	3.1E+06	RNPU =	3.1E+06
	PSUR =	982.5	PSUR =	982.5	PSUR =	983.5	PSUR =	980.3	PSUR =	982.5
	MTOP =	0.82	MTOP =	0.82	MTOP =	0.82	MTOP =	0.82	MTOP =	0.82
Y,in.	U/UTOP	W/UTOP	U/UTOP	W/UTOP	U/UTOP	W/UTOP	U/UTOP	W/UTOP	U/UTOP	W/UTOP
0.240	0.6248	-0.1802	0.6235	-0.1798	0.6214	-0.1779	0.6249	-0.1802	0.6200	-0.1860
0.470	0.7459	-0.0669	0.7467	-0.0625	0.7483	-0.0612	0.7493	-0.0613	0.7429	-0.0695
0.970	0.8967	0.1034	0.8909	0.1026	0.8940	0.1014	0.8935	0.1024	0.8925	0.1009
1.470	0.9782	-0.1523	0.9748	-0.1521	0.9758	-0.1510	0.9722	-0.1556	0.9742	-0.1529
1.960	1.0076	-0.1943	1.0076	-0.1961	1.0043	-0.1899	1.0051	-0.1945	1.0052	-0.1968
2.330	0.9814	-0.1264	0.9794	-0.1262	0.9807	-0.1257	0.9792	-0.1277	0.9806	-0.1296
2.990	0.9847	-0.1986	0.9831	-0.2024	0.9821	-0.1961	0.9814	-0.1972	0.9831	-0.2003
3.490	0.9947	-0.1233	0.9913	-0.1242	0.9920	-0.1164	0.9919	-0.1195	0.9937	-0.1495
3.990	0.9984	-0.1236	0.9976	-0.1170	0.9975	-0.1183	0.9925	-0.1213	0.9862	-0.1341
4.960	1.0000	-0.0765	1.0000	-0.0776	1.0000	-0.0806	1.0000	-0.0778	1.0000	-0.0808

Table K-2. Continued.

F111/MAW BOUNDARY LAYER DATA, FLT 229										
Time	14:04:38.000		14:04:38.500		14:04:46.500		14:05:12.000		14:05:12.500	
	Camber	0/2	Camber	0/2	Camber	0/2	Camber	0/2	Camber	0/2
	QINF =	451.8	QINF =	452.0	QINF =	451.7	QINF =	454.2	QINF =	454.7
	MINF =	0.804	MINF =	0.804	MINF =	0.804	MINF =	0.805	MINF =	0.805
	ALPT =	3.95	ALPT =	4.01	ALPT =	4.01	ALPT =	4.94	ALPT =	5.07
	BETA =	0.31	BETA =	0.34	BETA =	0.31	BETA =	0.02	BETA =	0.25
	H =	19358.	H =	19358.	H =	19369.	H =	19282.	H =	19283.
	TINF =	2.8	TINF =	2.8	TINF =	2.1	TINF =	2.7	TINF =	2.6
	RNPU =	3.1E+06	RNPU =	3.1E+06	RNPU =	3.1E+06	RNPU =	3.1E+06	RNPU =	3.1E+06
	PSUR =	981.4	PSUR =	985.8	PSUR =	980.3	PSUR =	982.4	PSUR =	983.5
	MTOP =	0.82	MTOP =	0.82	MTOP =	0.82	MTOP =	0.83	MTOP =	0.83
Y,in.	U/UTOP	W/UTOP	U/UTOP	W/UTOP	U/UTOP	W/UTOP	U/UTOP	W/UTOP	U/UTOP	W/UTOP
0.240	0.6244	-0.1926	0.6212	-0.1786	0.6234	-0.1870	0.6135	-0.1990	0.5992	-0.1725
0.470	0.7485	-0.0612	0.7453	-0.0609	0.7447	-0.0567	0.7331	-0.0590	0.7246	-0.0699
0.970	0.8942	0.1071	0.8955	0.1015	0.8944	0.1025	0.8776	0.0879	0.8698	0.0835
1.470	0.9759	-0.1537	0.9745	-0.1556	0.9781	-0.1519	0.9690	-0.1633	0.9603	-0.1640
1.960	1.0061	-0.1933	1.0060	-0.1932	1.0071	-0.1930	1.0053	-0.1989	0.9983	-0.2009
2.330	0.9808	-0.1303	0.9805	-0.1287	0.9816	-0.1257	0.9769	-0.1373	0.9695	-0.1403
2.990	0.9831	-0.1999	0.9834	-0.1971	0.9837	-0.1960	0.9834	-0.2039	0.9757	-0.2075
3.490	0.9908	-0.1250	0.9947	-0.1194	0.9892	-0.1275	0.9870	-0.1325	0.9841	-0.1388
3.990	0.9966	-0.1290	0.9944	-0.1027	0.9968	-0.1183	0.9949	-0.1220	0.9879	-0.1302
4.960	1.0000	-0.0788	1.0000	-0.0788	1.0000	-0.0773	1.0000	-0.0797	1.0000	-0.0823

F111/MAW BOUNDARY LAYER DATA, FLT 229										
Time	14:05:13.000		14:05:16.000		14:05:16.500		14:05:18.000		14:05:21.000	
	Camber	0/2	Camber	0/2	Camber	0/2	Camber	0/2	Camber	0/2
	QINF =	454.7	QINF =	457.0	QINF =	457.3	QINF =	456.4	QINF =	455.0
	MINF =	0.805	MINF =	0.807	MINF =	0.807	MINF =	0.807	MINF =	0.805
	ALPT =	5.14	ALPT =	6.04	ALPT =	6.09	ALPT =	6.20	ALPT =	6.96
	BETA =	0.11	BETA =	0.05	BETA =	0.05	BETA =	-0.07	BETA =	0.37
	H =	19283.	H =	19274.	H =	19275.	H =	19285.	H =	19272.
	TINF =	2.6	TINF =	2.7	TINF =	2.7	TINF =	2.4	TINF =	2.3
	RNPU =	3.1E+06	RNPU =	3.1E+06	RNPU =	3.2E+06	RNPU =	3.1E+06	RNPU =	3.1E+06
	PSUR =	983.5	PSUR =	981.3	PSUR =	981.3	PSUR =	977.0	PSUR =	978.0
	MTOP =	0.83	MTOP =	0.83	MTOP =	0.83	MTOP =	0.83	MTOP =	0.82
Y,in.	U/UTOP	W/UTOP	U/UTOP	W/UTOP	U/UTOP	W/UTOP	U/UTOP	W/UTOP	U/UTOP	W/UTOP
0.240	0.6114	-0.1892	0.5971	-0.1838	0.6092	-0.1992	0.6193	-0.2168	0.6345	-0.2165
0.470	0.7267	-0.0708	0.7148	-0.0711	0.7257	-0.0761	0.7317	-0.0628	0.7435	-0.0895
0.970	0.8749	0.0809	0.8549	0.0676	0.8569	0.0647	0.8583	0.0639	0.8514	0.0504
1.470	0.9667	-0.1659	0.9512	-0.1784	0.9541	-0.1788	0.9567	-0.1815	0.9321	-0.2006
1.960	1.0070	-0.2000	0.9985	-0.2064	1.0047	-0.2090	1.0070	-0.2034	0.9932	-0.2132
2.330	0.9790	-0.1406	0.9729	-0.1518	0.9804	-0.1560	0.9829	-0.1558	0.9832	-0.1691
2.990	0.9827	-0.2081	0.9770	-0.2136	0.9836	-0.2159	0.9852	-0.2167	0.9897	-0.2342
3.490	0.9905	-0.1397	0.9848	-0.1546	0.9928	-0.1647	0.9914	-0.1590	0.9967	-0.1762
3.990	0.9915	-0.1371	0.9883	-0.1456	0.9973	-0.1466	0.9987	-0.1479	1.0029	-0.1603
4.960	1.0000	-0.0850	1.0000	-0.0915	1.0000	-0.0960	1.0000	-0.0980	1.0000	-0.1089

Table K-2. Continued.

F111/MAW BOUNDARY LAYER DATA, FLT 229										
Time	14:05:21.500		14:05:22.000		14:05:22.500		14:05:23.000		14:05:26.500	
	Camber	0/2	Camber	0/2	Camber	0/2	Camber	0/2	Camber	0/2
	QINF =	455.0	QINF =	455.1	QINF =	454.8	QINF =	454.5	QINF =	459.8
	MINF =	0.805	MINF =	0.805	MINF =	0.805	MINF =	0.804	MINF =	0.808
	ALPT =	7.02	ALPT =	7.08	ALPT =	7.01	ALPT =	7.01	ALPT =	7.93
	BETA =	0.37	BETA =	0.34	BETA =	0.17	BETA =	0.25	BETA =	0.28
	H =	19272.	H =	19261.	H =	19249.	H =	19249.	H =	19177.
	TINF =	2.3	TINF =	2.3	TINF =	2.0	TINF =	2.0	TINF =	2.6
	RNPU =	3.1E+06	RNPU =	3.1E+06	RNPU =	3.1E+06	RNPU =	3.1E+06	RNPU =	3.2E+06
	PSUR =	979.1	PSUR =	983.5	PSUR =	979.1	PSUR =	978.0	PSUR =	985.6
	MTOP =	0.82	MTOP =	0.81	MTOP =	0.81	MTOP =	0.82	MTOP =	0.80
Y,in.	U/UTOP	W/UTOP	U/UTOP	W/UTOP	U/UTOP	W/UTOP	U/UTOP	W/UTOP	U/UTOP	W/UTOP
0.240	0.6351	-0.2089	0.6416	-0.1985	0.6394	-0.2316	0.6376	-0.1978	0.6693	-0.2130
0.470	0.7431	-0.0976	0.7479	-0.0935	0.7481	-0.0915	0.7424	-0.0941	0.7692	-0.0893
0.970	0.8544	0.0457	0.8605	0.0472	0.8581	0.0485	0.8496	0.0477	0.8504	0.0365
1.470	0.9372	-0.1963	0.9393	-0.1960	0.9306	-0.2041	0.9323	-0.2040	0.9125	-0.2008
1.960	0.9920	-0.2051	0.9953	-0.2136	0.9872	-0.2181	0.9880	-0.2189	0.9623	-0.2124
2.330	0.9832	-0.1716	0.9855	-0.1750	0.9851	-0.1666	0.9795	-0.1646	0.9705	-0.1767
2.990	0.9882	-0.2306	0.9913	-0.2299	0.9925	-0.2377	0.9872	-0.2368	0.9926	-0.2372
3.490	0.9951	-0.1779	0.9956	-0.1732	0.9980	-0.1803	0.9918	-0.1708	0.9961	-0.1673
3.990	1.0026	-0.1598	1.0018	-0.1649	1.0003	-0.1702	0.9963	-0.1650	1.0039	-0.1726
4.960	1.0000	-0.1105	1.0000	-0.1108	1.0000	-0.1124	1.0000	-0.1055	1.0000	-0.1182

F111/MAW BOUNDARY LAYER DATA, FLT 229										
Time	14:05:27.000		14:05:27.500		14:05:28.000		14:05:28.500		14:05:36.500	
	Camber	0/2	Camber	0/2	Camber	0/2	Camber	0/2	Camber	0/2
	QINF =	460.1	QINF =	460.4	QINF =	460.7	QINF =	461.3	QINF =	472.3
	MINF =	0.808	MINF =	0.808	MINF =	0.808	MINF =	0.808	MINF =	0.813
	ALPT =	8.02	ALPT =	7.97	ALPT =	8.01	ALPT =	8.02	ALPT =	8.52
	BETA =	0.22	BETA =	0.25	BETA =	0.25	BETA =	0.34	BETA =	0.19
	H =	19166.	H =	19155.	H =	19144.	H =	19122.	H =	18833.
	TINF =	2.6	TINF =	2.2	TINF =	2.2	TINF =	2.5	TINF =	3.9
	RNPU =	3.2E+06	RNPU =	3.2E+06	RNPU =	3.2E+06	RNPU =	3.2E+06	RNPU =	3.2E+06
	PSUR =	988.9	PSUR =	988.9	PSUR =	984.5	PSUR =	988.9	PSUR =	1007.4
	MTOP =	0.79	MTOP =	0.80	MTOP =	0.80	MTOP =	0.80	MTOP =	0.80
Y,in.	U/UTOP	W/UTOP	U/UTOP	W/UTOP	U/UTOP	W/UTOP	U/UTOP	W/UTOP	U/UTOP	W/UTOP
0.240	0.6744	-0.2021	0.6682	-0.2139	0.6668	-0.2123	0.6710	-0.2075	0.6738	-0.2043
0.470	0.7736	-0.0956	0.7706	-0.0998	0.7764	-0.1053	0.7712	-0.0869	0.7617	-0.1026
0.970	0.8540	0.0316	0.8505	0.0305	0.8553	0.0352	0.8481	0.0334	0.8185	0.0267
1.470	0.9188	-0.2030	0.9136	-0.2038	0.9184	-0.2095	0.9097	-0.1999	0.8708	-0.1924
1.960	0.9642	-0.2100	0.9569	-0.2071	0.9546	-0.2007	0.9542	-0.2098	0.9117	-0.1962
2.330	0.9708	-0.1721	0.9639	-0.1776	0.9659	-0.1641	0.9656	-0.1748	0.9225	-0.1729
2.990	0.9966	-0.2417	0.9915	-0.2393	0.9907	-0.2434	0.9929	-0.2406	0.9583	-0.2339
3.490	1.0057	-0.1921	0.9983	-0.1904	1.0064	-0.1748	1.0017	-0.1889	0.9877	-0.1866
3.990	1.0073	-0.1642	0.9971	-0.1786	1.0033	-0.1678	1.0078	-0.1715	1.0063	-0.1692
4.960	1.0000	-0.1191	1.0000	-0.1167	1.0000	-0.1186	1.0000	-0.1179	1.0000	-0.1160

Table K-2. Continued.

F111/MAW BOUNDARY LAYER DATA, FLT 229										
Time	14:05:37.000		14:05:37.500		14:05:38.000		14:05:38.500		14:05:39.000	
	Camber	0/2	Camber	0/2	Camber	0/2	Camber	0/2	Camber	0/2
	QINF =	472.6	QINF =	472.6	QINF =	472.6	QINF =	472.6	QINF =	472.1
	MINF =	0.813	MINF =	0.813	MINF =	0.813	MINF =	0.813	MINF =	0.812
	ALPT =	8.52	ALPT =	8.48	ALPT =	8.63	ALPT =	8.75	ALPT =	8.75
	BETA =	0.17	BETA =	0.08	BETA =	0.14	BETA =	0.22	BETA =	0.28
	H =	18822.	H =	18811.	H =	18811.	H =	18800.	H =	18799.
	TINF =	3.9	TINF =	4.3	TINF =	3.9	TINF =	4.0	TINF =	4.0
	RNPU =	3.2E+06	RNPU =	3.2E+06	RNPU =	3.2E+06	RNPU =	3.2E+06	RNPU =	3.2E+06
	PSUR =	1006.3	PSUR =	1005.2	PSUR =	1005.2	PSUR =	1008.5	PSUR =	1008.5
	MTOP =	0.80	MTOP =	0.80	MTOP =	0.80	MTOP =	0.80	MTOP =	0.81
Y,in.	U/UTOP	W/UTOP	U/UTOP	W/UTOP	U/UTOP	W/UTOP	U/UTOP	W/UTOP	U/UTOP	W/UTOP
0.240	0.6696	-0.1987	0.6842	-0.1918	0.6714	-0.2107	0.6629	-0.2122	0.6586	-0.2108
0.470	0.7599	-0.0928	0.7637	-0.0941	0.7621	-0.0876	0.7474	-0.0872	0.7426	-0.0882
0.970	0.8247	0.0279	0.8213	0.0280	0.8196	0.0246	0.8021	0.0219	0.7921	0.0221
1.470	0.8780	-0.1912	0.8795	-0.1929	0.8710	-0.1942	0.8561	-0.1867	0.8535	-0.1919
1.960	0.9157	-0.1920	0.9218	-0.1918	0.9118	-0.1939	0.8993	-0.1878	0.8934	-0.1871
2.330	0.9217	-0.1755	0.9256	-0.1714	0.9199	-0.1689	0.9094	-0.1673	0.8998	-0.1679
2.990	0.9576	-0.2370	0.9586	-0.2312	0.9556	-0.2309	0.9435	-0.2246	0.9342	-0.2294
3.490	0.9883	-0.1940	0.9842	-0.1778	0.9825	-0.1607	0.9769	-0.1798	0.9688	-0.1919
3.990	1.0096	-0.1716	1.0054	-0.1720	1.0048	-0.1732	1.0000	-0.1744	0.9934	-0.1727
4.960	1.0000	-0.1149	1.0000	-0.1175	1.0000	-0.1160	1.0000	-0.1227	1.0000	-0.1164

F111/MAW BOUNDARY LAYER DATA, FLT 229										
Time	14:05:39.500		14:05:40.000		14:05:43.000		14:05:46.000		14:07:12.500	
	Camber	0/2	Camber	0/2	Camber	0/2	Camber	0/2	Camber	5/2
	QINF =	471.8	QINF =	471.2	QINF =	462.4	QINF =	454.6	QINF =	451.2
	MINF =	0.812	MINF =	0.811	MINF =	0.804	MINF =	0.797	MINF =	0.801
	ALPT =	8.93	ALPT =	9.14	ALPT =	9.97	ALPT =	9.97	ALPT =	4.18
	BETA =	0.37	BETA =	0.25	BETA =	0.11	BETA =	0.05	BETA =	0.28
	H =	18799.	H =	18798.	H =	18810.	H =	18790.	H =	19245.
	TINF =	4.4	TINF =	4.1	TINF =	4.4	TINF =	4.4	TINF =	2.8
	RNPU =	3.2E+06	RNPU =	3.2E+06	RNPU =	3.2E+06	RNPU =	3.2E+06	RNPU =	3.1E+06
	PSUR =	1008.5	PSUR =	1007.4	PSUR =	988.6	PSUR =	989.7	PSUR =	987.9
	MTOP =	0.81	MTOP =	0.80	MTOP =	0.59	MTOP =	0.53	MTOP =	0.82
Y,in.	U/UTOP	W/UTOP	U/UTOP	W/UTOP	U/UTOP	W/UTOP	U/UTOP	W/UTOP	U/UTOP	W/UTOP
0.240	0.6413	-0.1939	0.6488	-0.1956	0.4206	-0.3083	0.3523	0.0088	0.6171	-0.1814
0.470	0.7267	-0.0801	0.7315	-0.0814	0.6506	0.3405	0.7166	0.3182	0.7368	-0.0543
0.970	0.7761	0.0192	0.7834	0.0162	0.6776	-0.2548	0.7511	-0.2292	0.8876	0.0921
1.470	0.8364	-0.1924	0.8350	-0.1915	0.6607	-0.0962	0.7575	-0.1070	0.9702	-0.1525
1.960	0.8716	-0.1821	0.8705	-0.1803	0.7293	-0.0419	0.8048	-0.0230	1.0057	-0.1977
2.330	0.8855	-0.1699	0.8798	-0.1613	0.7519	-0.0838	0.8043	-0.0260	0.9801	-0.1290
2.990	0.9256	-0.2237	0.9177	-0.2251	0.7820	-0.1285	0.8214	-0.2009	0.9824	-0.1975
3.490	0.9643	-0.2017	0.9546	-0.1811	0.8799	-0.0149	0.9138	-0.0221	0.9904	-0.1244
3.990	0.9855	-0.1763	0.9783	-0.1671	0.8851	-0.0954	0.8958	-0.1004	0.9980	-0.1194
4.960	1.0000	-0.1190	1.0000	-0.1168	1.0000	-0.0978	1.0000	-0.0880	1.0000	-0.0782

Table K-2. Continued.

F111/MAW BOUNDARY LAYER DATA, FLT 229										
Time	14:07:14.000		14:07:19.500		14:07:20.000		14:07:34.500		14:07:35.000	
	Camber	5/2	Camber	5/2	Camber	5/2	Camber	5/2	Camber	5/2
	QINF =	450.1	QINF =	449.8	QINF =	450.3	QINF =	452.3	QINF =	452.3
	MINF =	0.800	MINF =	0.800	MINF =	0.801	MINF =	0.801	MINF =	0.801
	ALPT =	4.19	ALPT =	4.19	ALPT =	4.18	ALPT =	4.18	ALPT =	4.19
	BETA =	0.34	BETA =	0.19	BETA =	0.43	BETA =	0.28	BETA =	0.34
	H =	19243.	H =	19254.	H =	19255.	H =	19145.	H =	19145.
	TINF =	3.2	TINF =	2.9	TINF =	2.9	TINF =	3.2	TINF =	3.2
	RNPU =	3.1E+06	RNPU =	3.1E+06	RNPU =	3.1E+06	RNPU =	3.1E+06	RNPU =	3.1E+06
	PSUR =	992.2	PSUR =	987.9	PSUR =	986.8	PSUR =	992.2	PSUR =	991.1
	MTOP =	0.81	MTOP =	0.82	MTOP =	0.82	MTOP =	0.82	MTOP =	0.82
Y,in.	U/UTOP	W/UTOP	U/UTOP	W/UTOP	U/UTOP	W/UTOP	U/UTOP	W/UTOP	U/UTOP	W/UTOP
0.240	0.6086	-0.1954	0.6205	-0.1752	0.6203	-0.1856	0.6244	-0.1755	0.6224	-0.2035
0.470	0.7346	-0.0592	0.7387	-0.0638	0.7434	-0.0640	0.7413	-0.0580	0.7366	-0.0635
0.970	0.8832	0.0906	0.8853	0.0912	0.8837	0.0896	0.8832	0.0942	0.8861	0.0920
1.470	0.9712	-0.1544	0.9670	-0.1567	0.9704	-0.1534	0.9733	-0.1523	0.9664	-0.1585
1.960	1.0069	-0.1989	1.0063	-0.1924	1.0020	-0.1951	1.0027	-0.1959	1.0058	-0.1941
2.330	0.9793	-0.1305	0.9804	-0.1292	0.9786	-0.1297	0.9789	-0.1287	0.9783	-0.1295
2.990	0.9827	-0.1992	0.9831	-0.2001	0.9819	-0.1938	0.9832	-0.2004	0.9818	-0.1957
3.490	0.9927	-0.1234	0.9990	-0.1170	0.9907	-0.1289	0.9922	-0.1253	0.9917	-0.1285
3.990	0.9970	-0.1164	0.9981	-0.1192	0.9965	-0.1237	0.9954	-0.1229	0.9978	-0.1182
4.960	1.0000	-0.0786	1.0000	-0.0799	1.0000	-0.0791	1.0000	-0.0798	1.0000	-0.0774

F111/MAW BOUNDARY LAYER DATA, FLT 229										
Time	14:07:42.500		14:07:43.000		14:07:43.500		14:07:44.500		14:07:45.000	
	Camber	5/2	Camber	5/2	Camber	5/2	Camber	5/2	Camber	5/2
	QINF =	454.2	QINF =	454.1	QINF =	454.4	QINF =	454.4	QINF =	454.4
	MINF =	0.801	MINF =	0.801	MINF =	0.801	MINF =	0.801	MINF =	0.801
	ALPT =	4.84	ALPT =	5.00	ALPT =	5.21	ALPT =	5.83	ALPT =	6.11
	BETA =	-0.85	BETA =	-1.25	BETA =	-1.31	BETA =	-0.38	BETA =	0.08
	H =	19069.	H =	19081.	H =	19081.	H =	19070.	H =	19059.
	TINF =	3.5	TINF =	3.5	TINF =	3.4	TINF =	3.5	TINF =	3.5
	RNPU =	3.1E+06	RNPU =	3.1E+06	RNPU =	3.1E+06	RNPU =	3.1E+06	RNPU =	3.1E+06
	PSUR =	993.3	PSUR =	993.3	PSUR =	994.4	PSUR =	995.4	PSUR =	992.2
	MTOP =	0.82	MTOP =	0.82	MTOP =	0.82	MTOP =	0.81	MTOP =	0.81
Y,in.	U/UTOP	W/UTOP	U/UTOP	W/UTOP	U/UTOP	W/UTOP	U/UTOP	W/UTOP	U/UTOP	W/UTOP
0.240	0.5875	-0.1770	0.5911	-0.1590	0.5989	-0.1569	0.6181	-0.1877	0.6296	-0.2011
0.470	0.7168	-0.0526	0.7218	-0.0378	0.7230	-0.0345	0.7390	-0.0655	0.7466	-0.0821
0.970	0.8751	0.0876	0.8760	0.0920	0.8697	0.0881	0.8655	0.0712	0.8643	0.0688
1.470	0.9631	-0.1473	0.9600	-0.1407	0.9606	-0.1349	0.9437	-0.1579	0.9327	-0.1848
1.960	1.0019	-0.1859	0.9981	-0.1847	1.0021	-0.1767	1.0021	-0.1979	1.0018	-0.2074
2.330	0.9783	-0.1226	0.9763	-0.1113	0.9792	-0.1123	0.9820	-0.1336	0.9811	-0.1534
2.990	0.9812	-0.1895	0.9789	-0.1808	0.9811	-0.1820	0.9806	-0.1990	0.9827	-0.2159
3.490	0.9883	-0.0882	0.9876	-0.0982	0.9895	-0.1048	0.9872	-0.1350	0.9937	-0.1494
3.990	1.0041	-0.1060	0.9922	-0.1067	0.9988	-0.1134	0.9993	-0.1250	0.9973	-0.1373
4.960	1.0000	-0.0717	1.0000	-0.0659	1.0000	-0.0640	1.0000	-0.0810	1.0000	-0.0938

Table K-2. Continued.

F111/MAW BOUNDARY LAYER DATA, FLT 229										
Time	14:07:45.500		14:07:46.500		14:07:47.000		14:07:47.500		14:07:48.000	
	Camber	5/2	Camber	5/2	Camber	5/2	Camber	5/2	Camber	5/2
	QINF =	453.9	QINF =	453.1	QINF =	452.2	QINF =	451.4	QINF =	451.1
	MINF =	0.801	MINF =	0.800	MINF =	0.799	MINF =	0.798	MINF =	0.798
	ALPT =	6.33	ALPT =	6.69	ALPT =	6.96	ALPT =	7.05	ALPT =	7.08
	BETA =	0.43	BETA =	0.48	BETA =	0.40	BETA =	0.25	BETA =	0.17
	H =	19058.	H =	19046.	H =	19045.	H =	19044.	H =	19043.
	TINF =	3.2	TINF =	3.3	TINF =	3.8	TINF =	3.2	TINF =	3.2
	RNPU =	3.1E+06	RNPU =	3.1E+06	RNPU =	3.1E+06	RNPU =	3.1E+06	RNPU =	3.1E+06
	PSUR =	988.9	PSUR =	992.2	PSUR =	991.1	PSUR =	991.1	PSUR =	991.1
	MTOP =	0.82	MTOP =	0.81	MTOP =	0.81	MTOP =	0.81	MTOP =	0.80
Y,in.	U/UTOP	W/UTOP	U/UTOP	W/UTOP	U/UTOP	W/UTOP	U/UTOP	W/UTOP	U/UTOP	W/UTOP
0.240	0.6436	-0.1993	0.6567	-0.2194	0.6559	-0.2190	0.6492	-0.2118	0.6561	-0.2137
0.470	0.7551	-0.0945	0.7543	-0.0976	0.7589	-0.0998	0.7541	-0.0915	0.7624	-0.0875
0.970	0.8643	0.0568	0.8636	0.0486	0.8561	0.0481	0.8475	0.0514	0.8568	0.0451
1.470	0.9423	-0.1843	0.9380	-0.1971	0.9265	-0.2011	0.9163	-0.1890	0.9218	-0.2009
1.960	0.9984	-0.2114	0.9921	-0.2169	0.9772	-0.2138	0.9678	-0.2073	0.9814	-0.2111
2.330	0.9822	-0.1604	0.9899	-0.1721	0.9832	-0.1737	0.9762	-0.1722	0.9859	-0.1732
2.990	0.9885	-0.2236	0.9943	-0.2327	0.9902	-0.2317	0.9837	-0.2342	0.9933	-0.2318
3.490	0.9936	-0.1614	1.0018	-0.1736	0.9933	-0.1702	0.9904	-0.1973	1.0021	-0.2024
3.990	1.0007	-0.1495	1.0155	-0.1567	0.9990	-0.1567	0.9850	-0.1619	0.9964	-0.1638
4.960	1.0000	-0.1022	1.0000	-0.1081	1.0000	-0.1083	1.0000	-0.1014	1.0000	-0.1111

F111/MAW BOUNDARY LAYER DATA, FLT 229										
Time	14:07:50.500		14:07:51.000		14:07:51.500		14:07:52.000		14:07:52.500	
	Camber	5/2	Camber	5/2	Camber	5/2	Camber	5/2	Camber	5/2
	QINF =	451.2	QINF =	451.5	QINF =	451.8	QINF =	452.1	QINF =	452.1
	MINF =	0.798	MINF =	0.798	MINF =	0.798	MINF =	0.798	MINF =	0.798
	ALPT =	7.60	ALPT =	7.57	ALPT =	7.63	ALPT =	7.92	ALPT =	8.00
	BETA =	0.34	BETA =	0.31	BETA =	0.31	BETA =	0.40	BETA =	0.31
	H =	19021.	H =	19010.	H =	19011.	H =	19000.	H =	19000.
	TINF =	3.9	TINF =	3.3	TINF =	3.6	TINF =	3.5	TINF =	3.2
	RNPU =	3.1E+06	RNPU =	3.1E+06	RNPU =	3.1E+06	RNPU =	3.1E+06	RNPU =	3.1E+06
	PSUR =	990.0	PSUR =	994.3	PSUR =	994.3	PSUR =	992.1	PSUR =	996.5
	MTOP =	0.80	MTOP =	0.80	MTOP =	0.79	MTOP =	0.81	MTOP =	0.80
Y,in.	U/UTOP	W/UTOP	U/UTOP	W/UTOP	U/UTOP	W/UTOP	U/UTOP	W/UTOP	U/UTOP	W/UTOP
0.240	0.6731	-0.2268	0.6706	-0.2157	0.6749	-0.2198	0.6708	-0.2087	0.6557	-0.2139
0.470	0.7751	-0.0989	0.7674	-0.0986	0.7713	-0.0886	0.7634	-0.1050	0.7576	-0.0933
0.970	0.8578	0.0406	0.8449	0.0392	0.8535	0.0441	0.8370	0.0251	0.8324	0.0295
1.470	0.9229	-0.1873	0.9168	-0.1980	0.9217	-0.1962	0.8988	-0.1980	0.8989	-0.1929
1.960	0.9700	-0.2093	0.9684	-0.2084	0.9720	-0.2116	0.9442	-0.2097	0.9466	-0.2046
2.330	0.9778	-0.1820	0.9747	-0.1814	0.9808	-0.1798	0.9583	-0.1766	0.9609	-0.1811
2.990	0.9950	-0.2357	0.9963	-0.2372	1.0017	-0.2430	0.9878	-0.2444	0.9896	-0.2374
3.490	0.9976	-0.1741	0.9966	-0.1755	1.0069	-0.1836	0.9952	-0.1772	1.0012	-0.1928
3.990	0.9977	-0.1661	1.0005	-0.1532	1.0163	-0.1592	0.9995	-0.1694	1.0003	-0.1734
4.960	1.0000	-0.1129	1.0000	-0.1087	1.0000	-0.1187	1.0000	-0.1139	1.0000	-0.1224

Table K-2. Continued.

F111/MAW BOUNDARY LAYER DATA, FLT 229										
Time	14:07:53.500		14:07:54.000		14:07:57.500		14:07:58.000		14:07:58.500	
	Camber	5/2	Camber	5/2	Camber	5/2	Camber	5/2	Camber	5/2
	QINF =	452.4	QINF =	452.7	QINF =	457.6	QINF =	459.6	QINF =	460.5
	MINF =	0.798	MINF =	0.798	MINF =	0.802	MINF =	0.803	MINF =	0.804
	ALPT =	8.11	ALPT =	8.11	ALPT =	7.99	ALPT =	7.96	ALPT =	8.05
	BETA =	0.02	BETA =	0.28	BETA =	0.45	BETA =	0.34	BETA =	0.28
	H =	18989.	H =	18978.	H =	18917.	H =	18908.	H =	18898.
	TINF =	3.5	TINF =	3.5	TINF =	3.4	TINF =	3.2	TINF =	3.1
	RNPU =	3.1E+06	RNPU =	3.1E+06	RNPU =	3.2E+06	RNPU =	3.2E+06	RNPU =	3.2E+06
	PSUR =	992.1	PSUR =	995.4	PSUR =	997.6	PSUR =	997.6	PSUR =	998.7
	MTOP =	0.80	MTOP =	0.80	MTOP =	0.79	MTOP =	0.80	MTOP =	0.80
Y,in.	U/UTOP	W/UTOP	U/UTOP	W/UTOP	U/UTOP	W/UTOP	U/UTOP	W/UTOP	U/UTOP	W/UTOP
0.240	0.6646	-0.2136	0.6669	-0.2106	0.6699	-0.2190	0.6702	-0.2219	0.6729	-0.2121
0.470	0.7582	-0.0937	0.7645	-0.0893	0.7711	-0.0950	0.7672	-0.0978	0.7674	-0.0887
0.970	0.8308	0.0264	0.8364	0.0260	0.8484	0.0286	0.8381	0.0318	0.8394	0.0294
1.470	0.8938	-0.1971	0.9008	-0.1920	0.9095	-0.2042	0.9015	-0.2005	0.9031	-0.2002
1.960	0.9409	-0.1981	0.9404	-0.2080	0.9573	-0.2118	0.9465	-0.2073	0.9492	-0.2088
2.330	0.9523	-0.1737	0.9550	-0.1731	0.9702	-0.1789	0.9613	-0.1747	0.9618	-0.1772
2.990	0.9837	-0.2371	0.9858	-0.2391	1.0023	-0.2435	0.9918	-0.2376	0.9923	-0.2372
3.490	0.9995	-0.1856	1.0010	-0.1904	1.0136	-0.1672	1.0060	-0.1871	1.0040	-0.1904
3.990	0.9984	-0.1545	1.0009	-0.1678	1.0281	-0.1719	1.0026	-0.1703	1.0019	-0.1768
4.960	1.0000	-0.1142	1.0000	-0.1156	1.0000	-0.1248	1.0000	-0.1184	1.0000	-0.1162

F111/MAW BOUNDARY LAYER DATA, FLT 229								
Time	14:08:05.000		14:08:05.500		14:08:06.000		14:08:14.500	
	Camber	5/2	Camber	5/2	Camber	5/2	Camber	5/2
	QINF =	475.2	QINF =	475.8	QINF =	476.4	QINF =	467.1
	MINF =	0.813	MINF =	0.813	MINF =	0.814	MINF =	0.802
	ALPT =	9.09	ALPT =	9.11	ALPT =	9.08	ALPT =	9.99
	BETA =	0.28	BETA =	0.25	BETA =	0.22	BETA =	0.05
	H =	18691.	H =	18680.	H =	18659.	H =	18424.
	TINF =	3.9	TINF =	4.2	TINF =	4.2	TINF =	5.1
	RNPU =	3.2E+06	RNPU =	3.2E+06	RNPU =	3.2E+06	RNPU =	3.2E+06
	PSUR =	1018.2	PSUR =	1019.3	PSUR =	1018.2	PSUR =	1011.5
	MTOP =	0.81	MTOP =	0.81	MTOP =	0.81	MTOP =	0.71
Y,in.	U/UTOP	W/UTOP	U/UTOP	W/UTOP	U/UTOP	W/UTOP	U/UTOP	W/UTOP
0.240	0.6346	-0.1853	0.6289	-0.1836	0.6353	-0.1713	0.5339	0.2149
0.470	0.7155	-0.0760	0.7085	-0.0640	0.7117	-0.0576	0.6721	0.1162
0.970	0.7683	0.0180	0.7572	0.0207	0.7655	0.0176	0.7107	0.0045
1.470	0.8148	-0.1890	0.8124	-0.1844	0.8148	-0.1885	0.7276	-0.0989
1.960	0.8602	-0.1794	0.8527	-0.1754	0.8592	-0.1779	0.7438	-0.0936
2.330	0.8802	-0.1724	0.8705	-0.1642	0.8747	-0.1591	0.7741	-0.0949
2.990	0.9258	-0.2336	0.9134	-0.2327	0.9176	-0.2275	0.8283	-0.1904
3.490	0.9630	-0.1866	0.9494	-0.1505	0.9542	-0.1760	0.8724	-0.0621
3.990	0.9877	-0.1667	0.9783	-0.1692	0.9807	-0.1703	0.9094	-0.1136
4.960	1.0000	-0.1184	1.0000	-0.1140	1.0000	-0.1161	1.0000	-0.0988

Table K-2. Continued.

F111/MAW BOUNDARY LAYER DATA, FLT 230										
Time	08:53:04.500		08:53:06.000		08:53:06.500		08:53:09.000		08:53:09.500	
	Camber	0/2	Camber	0/2	Camber	0/2	Camber	0/2	Camber	0/2
	QINF =	510.8	QINF =	505.0	QINF =	502.5	QINF =	498.0	QINF =	498.6
	MINF =	0.780	MINF =	0.778	MINF =	0.777	MINF =	0.775	MINF =	0.775
	ALPT =	2.82	ALPT =	2.82	ALPT =	2.82	ALPT =	2.79	ALPT =	2.85
	BETA =	0.72	BETA =	0.45	BETA =	0.54	BETA =	0.60	BETA =	0.60
	H =	14914.	H =	15042.	H =	15084.	H =	15180.	H =	15181.
	TINF =	13.0	TINF =	11.9	TINF =	12.4	TINF =	11.7	TINF =	11.9
	RNPU =	3.5E+06	RNPU =	3.5E+06	RNPU =	3.5E+06	RNPU =	3.5E+06	RNPU =	3.5E+06
	PSUR =	1188.3	PSUR =	1181.8	PSUR =	1181.8	PSUR =	1176.4	PSUR =	1176.4
	MTOP =	0.79	MTOP =	0.79	MTOP =	0.78	MTOP =	0.78	MTOP =	0.79
Y,in.	U/UTOP	W/UTOP	U/UTOP	W/UTOP	U/UTOP	W/UTOP	U/UTOP	W/UTOP	U/UTOP	W/UTOP
0.240	0.6367	-0.1621	0.6454	-0.1623	0.6444	-0.1842	0.6429	-0.1635	0.6450	-0.1639
0.470	0.7657	-0.0524	0.7684	-0.0411	0.7711	-0.0521	0.7722	-0.0483	0.7732	-0.0522
0.970	0.9180	0.1269	0.9171	0.1254	0.9210	0.1242	0.9240	0.1252	0.9172	0.1215
1.470	0.9804	-0.1129	0.9835	-0.1182	0.9804	-0.1232	0.9843	-0.1227	0.9762	-0.1264
1.960	0.9989	-0.1870	0.9984	-0.1850	0.9989	-0.1867	1.0056	-0.1871	1.0005	-0.1861
2.330	0.9690	-0.1050	0.9726	-0.1046	0.9731	-0.1049	0.9767	-0.1057	0.9727	-0.1051
2.990	0.9738	-0.1753	0.9760	-0.1726	0.9782	-0.1742	0.9811	-0.1750	0.9769	-0.1783
3.490	0.9846	-0.0889	0.9819	-0.0946	0.9857	-0.0886	0.9896	-0.0908	0.9852	-0.0966
3.990	0.9948	-0.0935	0.9998	-0.0954	0.9994	-0.0970	1.0025	-0.0957	0.9965	-0.1017
4.960	1.0000	-0.0528	1.0000	-0.0561	1.0000	-0.0552	1.0000	-0.0552	1.0000	-0.0575

F111/MAW BOUNDARY LAYER DATA, FLT 230										
Time	08:53:15.500		08:53:16.000		08:53:17.000		08:54:44.500		08:54:46.000	
	Camber	0/2	Camber	0/2	Camber	0/2	Camber	0/3	Camber	0/3
	QINF =	515.9	QINF =	518.4	QINF =	523.9	QINF =	513.7	QINF =	513.4
	MINF =	0.785	MINF =	0.786	MINF =	0.789	MINF =	0.783	MINF =	0.783
	ALPT =	3.97	ALPT =	4.06	ALPT =	4.03	ALPT =	4.20	ALPT =	4.20
	BETA =	0.63	BETA =	0.57	BETA =	0.63	BETA =	0.66	BETA =	0.66
	H =	14942.	H =	14900.	H =	14827.	H =	14962.	H =	14950.
	TINF =	12.7	TINF =	12.9	TINF =	12.9	TINF =	11.6	TINF =	11.6
	RNPU =	3.6E+06	RNPU =	3.6E+06	RNPU =	3.6E+06	RNPU =	3.6E+06	RNPU =	3.6E+06
	PSUR =	1182.8	PSUR =	1182.8	PSUR =	1193.6	PSUR =	1170.7	PSUR =	1169.6
	MTOP =	0.80	MTOP =	0.80	MTOP =	0.80	MTOP =	0.81	MTOP =	0.81
Y,in.	U/UTOP	W/UTOP	U/UTOP	W/UTOP	U/UTOP	W/UTOP	U/UTOP	W/UTOP	U/UTOP	W/UTOP
0.240	0.6275	-0.1931	0.6290	-0.2101	0.6244	-0.1613	0.5960	-0.2323	0.5987	-0.2020
0.470	0.7514	-0.0713	0.7517	-0.0783	0.7474	-0.0810	0.7191	-0.0830	0.7216	-0.0921
0.970	0.8982	0.1050	0.8931	0.0972	0.8950	0.1015	0.8774	0.0861	0.8821	0.0834
1.470	0.9727	-0.1420	0.9726	-0.1428	0.9752	-0.1354	0.9695	-0.1635	0.9730	-0.1698
1.960	0.9945	-0.1939	1.0001	-0.2009	0.9960	-0.1995	1.0004	-0.2083	1.0050	-0.2091
2.330	0.9699	-0.1284	0.9717	-0.1361	0.9728	-0.1272	0.9749	-0.1520	0.9788	-0.1472
2.990	0.9753	-0.1926	0.9802	-0.1900	0.9779	-0.1869	0.9796	-0.2036	0.9817	-0.2081
3.490	0.9810	-0.1212	0.9865	-0.1249	0.9810	-0.1272	0.9837	-0.1503	0.9864	-0.1467
3.990	0.9977	-0.1157	1.0019	-0.1169	0.9958	-0.1166	0.9988	-0.1374	1.0035	-0.1387
4.960	1.0000	-0.0680	1.0000	-0.0705	1.0000	-0.0754	1.0000	-0.0849	1.0000	-0.0884

Table K-2. Continued.

F111/MAW BOUNDARY LAYER DATA, FLT 230										
Time	08:54:47.500		08:54:48.500		08:54:54.500		08:54:55.000		08:54:55.500	
	Camber	0/3	Camber	0/3	Camber	1/4	Camber	1/4	Camber	1/4
	QINF =	513.4	QINF =	513.1	QINF =	512.2	QINF =	510.7	QINF =	509.1
	MINF =	0.783	MINF =	0.783	MINF =	0.782	MINF =	0.781	MINF =	0.780
	ALPT =	4.19	ALPT =	4.19	ALPT =	5.80	ALPT =	5.99	ALPT =	6.02
	BETA =	0.60	BETA =	0.54	BETA =	0.66	BETA =	0.60	BETA =	0.66
	H =	14950.	H =	14950.	H =	14960.	H =	14970.	H =	14991.
	TINF =	11.6	TINF =	11.6	TINF =	12.0	TINF =	11.5	TINF =	11.3
	RNPU =	3.6E+06	RNPU =	3.6E+06	RNPU =	3.5E+06	RNPU =	3.5E+06	RNPU =	3.5E+06
	PSUR =	1171.8	PSUR =	1172.9	PSUR =	1160.7	PSUR =	1156.3	PSUR =	1153.0
	MTOP =	0.81	MTOP =	0.80	MTOP =	0.81	MTOP =	0.82	MTOP =	0.82
Y,in.	U/UTOP	W/UTOP	U/UTOP	W/UTOP	U/UTOP	W/UTOP	U/UTOP	W/UTOP	U/UTOP	W/UTOP
0.240	0.5987	-0.2477	0.5961	-0.2324	0.5574	-0.2595	0.5427	-0.2706	0.5384	-0.2912
0.470	0.7238	-0.0932	0.7263	-0.0915	0.6824	-0.1019	0.6635	-0.1072	0.6575	-0.0964
0.970	0.8839	0.0865	0.8849	0.0904	0.8382	0.0486	0.8251	0.0413	0.8223	0.0394
1.470	0.9703	-0.1622	0.9737	-0.1642	0.9538	-0.1965	0.9418	-0.2094	0.9500	-0.2075
1.960	1.0035	-0.2097	1.0073	-0.2118	1.0016	-0.2272	0.9982	-0.2325	1.0010	-0.2327
2.330	0.9767	-0.1502	0.9802	-0.1500	0.9771	-0.1773	0.9758	-0.1854	0.9774	-0.1888
2.990	0.9822	-0.2035	0.9845	-0.2091	0.9834	-0.2267	0.9824	-0.2364	0.9839	-0.2367
3.490	0.9875	-0.1495	0.9880	-0.1509	0.9876	-0.1765	0.9890	-0.1978	0.9907	-0.2114
3.990	1.0015	-0.1318	1.0047	-0.1370	0.9987	-0.1643	0.9998	-0.1832	0.9990	-0.1795
4.960	1.0000	-0.0849	1.0000	-0.0850	1.0000	-0.1071	1.0000	-0.1118	1.0000	-0.1137

F111/MAW BOUNDARY LAYER DATA, FLT 230										
Time	08:54:56.000		08:54:57.000		08:54:57.500		08:54:58.000		08:55:05.500	
	Camber	1/4	Camber	2/5/4/5	Camber	2/5	Camber	2/5	Camber	0/2
	QINF =	506.6	QINF =	500.1	QINF =	496.0	QINF =	491.7	QINF =	444.3
	MINF =	0.779	MINF =	0.775	MINF =	0.772	MINF =	0.770	MINF =	0.747
	ALPT =	6.21	ALPT =	6.70	ALPT =	6.70	ALPT =	6.59	ALPT =	2.63
	BETA =	0.63	BETA =	0.45	BETA =	0.51	BETA =	0.60	BETA =	0.69
	H =	15022.	H =	15082.	H =	15133.	H =	15185.	H =	16206.
	TINF =	11.1	TINF =	11.0	TINF =	10.9	TINF =	10.3	TINF =	6.4
	RNPU =	3.5E+06	RNPU =	3.5E+06	RNPU =	3.5E+06	RNPU =	3.5E+06	RNPU =	3.3E+06
	PSUR =	1151.9	PSUR =	1142.0	PSUR =	1140.9	PSUR =	1134.4	PSUR =	1128.8
	MTOP =	0.81	MTOP =	0.82	MTOP =	0.81	MTOP =	0.81	MTOP =	0.76
Y,in.	U/UTOP	W/UTOP	U/UTOP	W/UTOP	U/UTOP	W/UTOP	U/UTOP	W/UTOP	U/UTOP	W/UTOP
0.240	0.5325	-0.3138	0.5191	-0.3122	0.5187	-0.3522	0.5121	-0.3486	0.6448	-0.1872
0.470	0.6468	-0.1034	0.6300	-0.0858	0.6228	-0.0880	0.6208	-0.0980	0.7785	-0.0358
0.970	0.8142	0.0323	0.8015	0.0232	0.7896	0.0172	0.7876	0.0197	0.9245	0.1213
1.470	0.9448	-0.2147	0.9386	-0.2200	0.9348	-0.2224	0.9289	-0.2277	0.9821	-0.1356
1.960	1.0020	-0.2374	0.9985	-0.2396	0.9983	-0.2389	0.9962	-0.2334	1.0010	-0.1855
2.330	0.9799	-0.1941	0.9806	-0.1957	0.9815	-0.1992	0.9792	-0.2009	0.9745	-0.1085
2.990	0.9865	-0.2415	0.9873	-0.2470	0.9888	-0.2503	0.9863	-0.2523	0.9794	-0.1860
3.490	0.9927	-0.2060	0.9918	-0.2135	0.9912	-0.2097	0.9886	-0.2249	0.9860	-0.0928
3.990	1.0013	-0.1843	0.9998	-0.1878	1.0024	-0.1939	0.9976	-0.1985	0.9987	-0.1085
4.960	1.0000	-0.1198	1.0000	-0.1236	1.0000	-0.1276	1.0000	-0.1268	1.0000	-0.0606

Table K-2. Continued.

F111/MAW BOUNDARY LAYER DATA, FLT 230										
Time	08:55:06.500		08:55:07.500		08:55:09.500		08:55:12.000		08:55:13.500	
	Camber	0/2	Camber	0/2	Camber	0/2	Camber	0/3/2/2	Camber	0/2
	QINF =	441.7	QINF =	439.9	QINF =	440.9	QINF =	447.9	QINF =	454.7
	MINF =	0.746	MINF =	0.745	MINF =	0.746	MINF =	0.751	MINF =	0.755
	ALPT =	2.62	ALPT =	2.62	ALPT =	3.10	ALPT =	3.10	ALPT =	3.10
	BETA =	0.77	BETA =	0.74	BETA =	0.77	BETA =	0.80	BETA =	0.77
	H =	16270.	H =	16313.	H =	16336.	H =	16266.	H =	16173.
	TINF =	6.5	TINF =	6.7	TINF =	5.8	TINF =	6.2	TINF =	6.4
	RNPU =	3.3E+06	RNPU =	3.2E+06	RNPU =	3.3E+06	RNPU =	3.3E+06	RNPU =	3.3E+06
	PSUR =	1123.4	PSUR =	1123.4	PSUR =	1118.0	PSUR =	1120.1	PSUR =	1124.5
	MTOP =	0.76	MTOP =	0.75	MTOP =	0.76	MTOP =	0.76	MTOP =	0.77
Y,in.	U/UTOP	W/UTOP	U/UTOP	W/UTOP	U/UTOP	W/UTOP	U/UTOP	W/UTOP	U/UTOP	W/UTOP
0.240	0.6533	-0.1764	0.6413	-0.2004	0.6407	-0.1968	0.6284	-0.2102	0.6324	-0.1973
0.470	0.7829	-0.0440	0.7785	-0.0443	0.7703	-0.0488	0.7598	-0.0551	0.7645	-0.0572
0.970	0.9286	0.1213	0.9222	0.1230	0.9152	0.1124	0.9125	0.1074	0.9144	0.1118
1.470	0.9874	-0.1320	0.9884	-0.1322	0.9828	-0.1417	0.9820	-0.1548	0.9837	-0.1455
1.960	1.0053	-0.1845	1.0062	-0.1834	1.0009	-0.1865	1.0074	-0.1941	1.0083	-0.1908
2.330	0.9771	-0.1079	0.9764	-0.1086	0.9767	-0.1146	0.9786	-0.1269	0.9763	-0.1232
2.990	0.9818	-0.1844	0.9814	-0.1865	0.9779	-0.1878	0.9829	-0.1928	0.9816	-0.1883
3.490	0.9918	-0.0914	0.9916	-0.0991	0.9864	-0.1012	0.9925	-0.1139	1.0000	-0.1047
3.990	1.0003	-0.0981	1.0012	-0.0959	0.9985	-0.1072	1.0019	-0.1103	1.0006	-0.1127
4.960	1.0000	-0.0608	1.0000	-0.0621	1.0000	-0.0635	1.0000	-0.0707	1.0000	-0.0675

F111/MAW BOUNDARY LAYER DATA, FLT 230										
Time	08:55:26.500		08:55:27.000		08:55:27.500		08:55:34.000		08:55:42.000	
	Camber	1/4	Camber	1/5/4/4	Camber	1/5/4/4	Camber	1/4	Camber	0/2
	QINF =	550.5	QINF =	552.2	QINF =	553.6	QINF =	558.2	QINF =	508.5
	MINF =	0.804	MINF =	0.804	MINF =	0.805	MINF =	0.805	MINF =	0.783
	ALPT =	6.29	ALPT =	6.28	ALPT =	6.24	ALPT =	6.21	ALPT =	2.57
	BETA =	0.60	BETA =	0.66	BETA =	0.72	BETA =	0.63	BETA =	0.57
	H =	14530.	H =	14487.	H =	14433.	H =	14281.	H =	15214.
	TINF =	12.5	TINF =	12.8	TINF =	13.1	TINF =	14.0	TINF =	10.9
	RNPU =	3.7E+06	RNPU =	3.7E+06	RNPU =	3.7E+06	RNPU =	3.7E+06	RNPU =	3.5E+06
	PSUR =	1136.0	PSUR =	1132.6	PSUR =	1128.2	PSUR =	1183.1	PSUR =	1173.2
	MTOP =	0.87	MTOP =	0.88	MTOP =	0.88	MTOP =	0.84	MTOP =	0.79
Y,in.	U/UTOP	W/UTOP	U/UTOP	W/UTOP	U/UTOP	W/UTOP	U/UTOP	W/UTOP	U/UTOP	W/UTOP
0.240	0.6318	-0.2947	0.6412	-0.3021	0.6503	-0.2840	0.5268	-0.3414	0.6410	-0.1844
0.470	0.7155	-0.1539	0.7199	-0.1548	0.7381	-0.1634	0.6331	-0.0892	0.7707	-0.0516
0.970	0.8202	0.0116	0.8257	0.0149	0.8285	0.0122	0.8106	0.0367	0.9194	0.1269
1.470	0.9243	-0.2183	0.9276	-0.2155	0.9221	-0.2159	0.9363	-0.2045	0.9798	-0.1186
1.960	0.9819	-0.2332	0.9806	-0.2350	0.9721	-0.2333	1.0007	-0.2369	0.9991	-0.1879
2.330	0.9760	-0.2023	0.9731	-0.2077	0.9690	-0.2060	0.9813	-0.1885	0.9720	-0.1074
2.990	0.9827	-0.2479	0.9820	-0.2483	0.9779	-0.2479	0.9872	-0.2343	0.9774	-0.1744
3.490	0.9890	-0.2437	0.9853	-0.2395	0.9838	-0.2337	0.9925	-0.2172	0.9861	-0.0910
3.990	1.0025	-0.2021	0.9989	-0.2072	0.9975	-0.2035	1.0051	-0.1745	0.9979	-0.0998
4.960	1.0000	-0.1328	1.0000	-0.1360	1.0000	-0.1376	1.0000	-0.1158	1.0000	-0.0585

Table K-2. Continued.

F111/MAW BOUNDARY LAYER DATA, FLT 230										
Time	08:55:43.000		08:55:44.000		08:55:46.000		08:55:46.500		08:55:47.000	
	Camber	0/2	Camber	0/2	Camber	0/2	Camber	0/2	Camber	0/2
	QINF =	502.9	QINF =	498.5	QINF =	494.1	QINF =	493.8	QINF =	494.1
	MINF =	0.780	MINF =	0.778	MINF =	0.776	MINF =	0.775	MINF =	0.776
	ALPT =	2.59	ALPT =	2.59	ALPT =	2.96	ALPT =	3.02	ALPT =	3.01
	BETA =	0.66	BETA =	0.74	BETA =	0.69	BETA =	0.66	BETA =	0.74
	H =	15297.	H =	15371.	H =	15433.	H =	15433.	H =	15433.
	TINF =	10.3	TINF =	10.2	TINF =	10.2	TINF =	10.2	TINF =	10.2
	RNPU =	3.5E+06	RNPU =	3.5E+06	RNPU =	3.5E+06	RNPU =	3.5E+06	RNPU =	3.5E+06
	PSUR =	1168.8	PSUR =	1168.8	PSUR =	1162.3	PSUR =	1161.3	PSUR =	1159.1
	MTOP =	0.79	MTOP =	0.78	MTOP =	0.79	MTOP =	0.78	MTOP =	0.79
Y,in.	U/UTOP	W/UTOP	U/UTOP	W/UTOP	U/UTOP	W/UTOP	U/UTOP	W/UTOP	U/UTOP	W/UTOP
0.240	0.6461	-0.1693	0.6390	-0.1693	0.6372	-0.1895	0.6386	-0.1778	0.6363	-0.1758
0.470	0.7756	-0.0453	0.7756	-0.0519	0.7680	-0.0541	0.7623	-0.0588	0.7631	-0.0615
0.970	0.9224	0.1284	0.9203	0.1269	0.9116	0.1176	0.9119	0.1189	0.9108	0.1157
1.470	0.9804	-0.1241	0.9816	-0.1233	0.9781	-0.1351	0.9789	-0.1372	0.9813	-0.1393
1.960	1.0014	-0.1870	0.9988	-0.1821	0.9985	-0.1935	1.0016	-0.1934	1.0046	-0.1919
2.330	0.9740	-0.1078	0.9735	-0.1086	0.9727	-0.1188	0.9744	-0.1142	0.9754	-0.1189
2.990	0.9791	-0.1768	0.9780	-0.1826	0.9789	-0.1875	0.9796	-0.1885	0.9814	-0.1851
3.490	0.9858	-0.0917	0.9859	-0.0975	0.9863	-0.1042	0.9887	-0.1058	0.9843	-0.1184
3.990	0.9975	-0.0954	0.9990	-0.1010	0.9987	-0.1052	0.9980	-0.1083	1.0004	-0.1133
4.960	1.0000	-0.0569	1.0000	-0.0595	1.0000	-0.0622	1.0000	-0.0652	1.0000	-0.0648

F111/MAW BOUNDARY LAYER DATA, FLT 230										
Time	08:55:54.000		08:55:54.500		08:56:00.000		08:56:01.500		09:00:30.000	
	Camber	0/3	Camber	0/3	Camber	0/3	Camber	0/3	Camber	0/3
	QINF =	523.9	QINF =	526.7	QINF =	564.3	QINF =	571.2	QINF =	512.6
	MINF =	0.792	MINF =	0.794	MINF =	0.813	MINF =	0.815	MINF =	0.783
	ALPT =	3.96	ALPT =	3.98	ALPT =	4.00	ALPT =	3.97	ALPT =	4.01
	BETA =	0.66	BETA =	0.66	BETA =	0.60	BETA =	0.63	BETA =	0.66
	H =	15051.	H =	15009.	H =	14466.	H =	14294.	H =	15017.
	TINF =	11.4	TINF =	11.8	TINF =	14.0	TINF =	14.8	TINF =	11.9
	RNPU =	3.6E+06	RNPU =	3.6E+06	RNPU =	3.7E+06	RNPU =	3.8E+06	RNPU =	3.5E+06
	PSUR =	1171.9	PSUR =	1171.9	PSUR =	1198.9	PSUR =	1208.6	PSUR =	1170.7
	MTOP =	0.81	MTOP =	0.81	MTOP =	0.83	MTOP =	0.83	MTOP =	0.80
Y,in.	U/UTOP	W/UTOP	U/UTOP	W/UTOP	U/UTOP	W/UTOP	U/UTOP	W/UTOP	U/UTOP	W/UTOP
0.240	0.6075	-0.2225	0.6017	-0.2234	0.5980	-0.2206	0.5941	-0.2154	0.5943	-0.2224
0.470	0.7305	-0.0842	0.7296	-0.0819	0.7222	-0.0939	0.7238	-0.0942	0.7264	-0.0950
0.970	0.8806	0.0936	0.8797	0.0935	0.8817	0.1011	0.8794	0.1000	0.8798	0.0900
1.470	0.9714	-0.1577	0.9715	-0.1566	0.9703	-0.1577	0.9713	-0.1501	0.9709	-0.1621
1.960	0.9990	-0.2085	1.0013	-0.2083	0.9993	-0.2102	0.9996	-0.2105	1.0010	-0.2076
2.330	0.9721	-0.1422	0.9739	-0.1437	0.9728	-0.1444	0.9725	-0.1460	0.9765	-0.1486
2.990	0.9781	-0.2010	0.9794	-0.1997	0.9791	-0.1978	0.9790	-0.1976	0.9795	-0.2058
3.490	0.9831	-0.1427	0.9847	-0.1456	0.9862	-0.1443	0.9834	-0.1474	0.9862	-0.1420
3.990	0.9986	-0.1283	0.9971	-0.1236	1.0010	-0.1308	1.0017	-0.1227	1.0014	-0.1389
4.960	1.0000	-0.0791	1.0000	-0.0820	1.0000	-0.0809	1.0000	-0.0805	1.0000	-0.0829

Table K-2. Continued.

F111/MAW BOUNDARY LAYER DATA, FLT 230										
Time	09:00:30.500		09:00:31.000		09:00:31.500		09:00:35.000		09:00:36.500	
	Camber	0/3	Camber	0/3	Camber	0/3	Camber	0/3	Camber	0/3
	QINF =	514.5	QINF =	513.6	QINF =	513.0	QINF =	510.3	QINF =	512.1
	MINF =	0.785	MINF =	0.784	MINF =	0.784	MINF =	0.781	MINF =	0.783
	ALPT =	4.02	ALPT =	3.98	ALPT =	4.02	ALPT =	4.17	ALPT =	4.18
	BETA =	0.57	BETA =	0.74	BETA =	0.45	BETA =	0.63	BETA =	0.63
	H =	15019.	H =	15018.	H =	15017.	H =	15003.	H =	15005.
	TINF =	12.0	TINF =	11.8	TINF =	11.9	TINF =	12.2	TINF =	12.0
	RNPU =	3.6E+06	RNPU =	3.6E+06	RNPU =	3.5E+06	RNPU =	3.5E+06	RNPU =	3.5E+06
	PSUR =	1167.5	PSUR =	1171.8	PSUR =	1171.8	PSUR =	1169.6	PSUR =	1166.4
	MTOP =	0.80	MTOP =	0.80	MTOP =	0.81	MTOP =	0.81	MTOP =	0.81
Y,in.	U/UTOP	W/UTOP	U/UTOP	W/UTOP	U/UTOP	W/UTOP	U/UTOP	W/UTOP	U/UTOP	W/UTOP
0.240	0.6024	-0.2441	0.5958	-0.2210	0.5920	-0.2449	0.5886	-0.2348	0.5896	-0.2221
0.470	0.7273	-0.0923	0.7206	-0.0950	0.7183	-0.0869	0.7172	-0.0930	0.7161	-0.0964
0.970	0.8870	0.0903	0.8794	0.0895	0.8735	0.0882	0.8716	0.0824	0.8776	0.0821
1.470	0.9777	-0.1622	0.9712	-0.1631	0.9698	-0.1617	0.9669	-0.1700	0.9760	-0.1665
1.960	1.0129	-0.2094	1.0029	-0.2101	0.9984	-0.2045	1.0013	-0.2119	1.0042	-0.2088
2.330	0.9830	-0.1480	0.9765	-0.1500	0.9739	-0.1475	0.9764	-0.1521	0.9777	-0.1506
2.990	0.9887	-0.1985	0.9830	-0.2061	0.9782	-0.1982	0.9810	-0.2065	0.9843	-0.2060
3.490	0.9921	-0.1529	0.9954	-0.1426	0.9831	-0.1502	0.9882	-0.1536	0.9863	-0.1562
3.990	1.0088	-0.1354	1.0051	-0.1348	0.9946	-0.1336	0.9992	-0.1420	1.0013	-0.1394
4.960	1.0000	-0.0834	1.0000	-0.0829	1.0000	-0.0813	1.0000	-0.0888	1.0000	-0.0869

F111/MAW BOUNDARY LAYER DATA, FLT 230										
Time	09:00:45.500		09:00:46.000		09:00:46.500		09:00:56.000		09:00:56.500	
	Camber	3/6	Camber	3/6	Camber	3/6	Camber	3/6	Camber	3/6
	QINF =	512.8	QINF =	510.1	QINF =	506.4	QINF =	510.9	QINF =	508.8
	MINF =	0.785	MINF =	0.782	MINF =	0.780	MINF =	0.783	MINF =	0.782
	ALPT =	7.89	ALPT =	8.37	ALPT =	7.80	ALPT =	8.11	ALPT =	8.22
	BETA =	0.34	BETA =	0.34	BETA =	0.43	BETA =	0.86	BETA =	0.74
	H =	15084.	H =	15081.	H =	15088.	H =	15093.	H =	15091.
	TINF =	11.7	TINF =	11.7	TINF =	11.7	TINF =	11.6	TINF =	11.8
	RNPU =	3.5E+06	RNPU =	3.5E+06	RNPU =	3.5E+06	RNPU =	3.5E+06	RNPU =	3.5E+06
	PSUR =	1064.7	PSUR =	1056.9	PSUR =	1047.1	PSUR =	1067.9	PSUR =	1049.2
	MTOP =	0.86	MTOP =	0.85	MTOP =	0.82	MTOP =	0.84	MTOP =	0.83
Y,in.	U/UTOP	W/UTOP	U/UTOP	W/UTOP	U/UTOP	W/UTOP	U/UTOP	W/UTOP	U/UTOP	W/UTOP
0.240	0.6824	-0.2553	0.6954	-0.2323	0.6866	-0.2277	0.6908	-0.2446	0.6928	-0.2286
0.470	0.7434	-0.1096	0.7668	-0.1084	0.7568	-0.0945	0.7584	-0.1244	0.7520	-0.0922
0.970	0.7722	-0.0506	0.7729	-0.0728	0.7741	-0.0672	0.7869	-0.0626	0.7507	-0.1053
1.470	0.8056	-0.1859	0.7859	-0.1897	0.7777	-0.1890	0.8070	-0.1964	0.7524	-0.1887
1.960	0.8093	-0.1543	0.7455	-0.1407	0.7325	-0.1185	0.7760	-0.1613	0.7235	-0.1141
2.330	0.8438	-0.2271	0.7896	-0.2451	0.7642	-0.2249	0.8224	-0.2815	0.7593	-0.2165
2.990	0.8824	-0.2208	0.8337	-0.2372	0.8058	-0.2311	0.8564	-0.2371	0.7973	-0.2163
3.490	0.9234	-0.1991	0.8884	-0.1901	0.8673	-0.1577	0.9068	-0.1813	0.8620	-0.1627
3.990	0.9607	-0.2096	0.9391	-0.2146	0.9293	-0.2064	0.9424	-0.2170	0.9144	-0.2041
4.960	1.0000	-0.1603	1.0000	-0.1666	1.0000	-0.1740	1.0000	-0.1694	1.0000	-0.1700

Table K-2. Continued.

F111/MAW BOUNDARY LAYER DATA, FLT 230										
Time	09:00:57.000		09:00:57.500		09:01:04.500		09:01:05.000		09:01:08.500	
	Camber	3/6	Camber	3/6	Camber	1/4	Camber	1/4	Camber	4/7
	QINF =	506.1	QINF =	502.8	QINF =	497.2	QINF =	498.1	QINF =	485.4
	MINF =	0.780	MINF =	0.777	MINF =	0.775	MINF =	0.776	MINF =	0.766
	ALPT =	8.46	ALPT =	8.44	ALPT =	5.77	ALPT =	6.65	ALPT =	9.05
	BETA =	0.69	BETA =	0.60	BETA =	0.98	BETA =	0.83	BETA =	0.14
	H =	15099.	H =	15096.	H =	15258.	H =	15259.	H =	15245.
	TINF =	11.7	TINF =	11.7	TINF =	10.9	TINF =	11.2	TINF =	10.8
	RNPU =	3.5E+06	RNPU =	3.5E+06	RNPU =	3.5E+06	RNPU =	3.5E+06	RNPU =	3.4E+06
	PSUR =	1063.4	PSUR =	1046.8	PSUR =	1142.3	PSUR =	1143.3	PSUR =	1051.4
	MTOP =	0.79	MTOP =	0.81	MTOP =	0.81	MTOP =	0.81	MTOP =	0.77
Y,in.	U/UTOP	W/UTOP	U/UTOP	W/UTOP	U/UTOP	W/UTOP	U/UTOP	W/UTOP	U/UTOP	W/UTOP
0.240	0.6817	-0.2309	0.6948	-0.2369	0.5592	-0.2727	0.5397	-0.3032	0.6985	-0.2170
0.470	0.7309	-0.0751	0.7528	-0.0845	0.6779	-0.1066	0.6561	-0.1198	0.7445	-0.0729
0.970	0.7202	-0.1418	0.7599	-0.1296	0.8434	0.0459	0.8141	0.0228	0.7605	-0.1766
1.470	0.7087	-0.1841	0.7461	-0.1819	0.9573	-0.2057	0.9434	-0.2209	0.7514	-0.1913
1.960	0.6636	-0.0842	0.6946	-0.0707	1.0024	-0.2326	1.0006	-0.2414	0.6998	-0.0713
2.330	0.7011	-0.1923	0.7079	-0.1624	0.9774	-0.1816	0.9736	-0.1892	0.7357	-0.2121
2.990	0.7457	-0.2259	0.7494	-0.2156	0.9855	-0.2330	0.9853	-0.2467	0.7646	-0.2128
3.490	0.8401	-0.1611	0.8208	-0.1389	0.9894	-0.2012	0.9887	-0.2179	0.8373	-0.1479
3.990	0.8911	-0.2201	0.8780	-0.1922	1.0003	-0.1740	1.0012	-0.1871	0.8697	-0.1876
4.960	1.0000	-0.1693	1.0000	-0.1661	1.0000	-0.1147	1.0000	-0.1203	1.0000	-0.1662

F111/MAW BOUNDARY LAYER DATA, FLT 230										
Time	09:01:09.000		09:01:19.000		09:01:19.500		09:01:20.000		09:01:20.500	
	Camber	4/7	Camber	4/7	Camber	4/7	Camber	4/7	Camber	4/7
	QINF =	481.2	QINF =	454.0	QINF =	450.3	QINF =	447.4	QINF =	443.4
	MINF =	0.763	MINF =	0.745	MINF =	0.742	MINF =	0.740	MINF =	0.737
	ALPT =	9.10	ALPT =	9.18	ALPT =	8.88	ALPT =	8.65	ALPT =	8.87
	BETA =	0.25	BETA =	0.63	BETA =	0.74	BETA =	0.83	BETA =	0.83
	H =	15252.	H =	15536.	H =	15543.	H =	15551.	H =	15558.
	TINF =	11.2	TINF =	9.7	TINF =	9.7	TINF =	9.7	TINF =	10.1
	RNPU =	3.4E+06	RNPU =	3.3E+06	RNPU =	3.3E+06	RNPU =	3.3E+06	RNPU =	3.3E+06
	PSUR =	1059.1	PSUR =	1066.0	PSUR =	1050.6	PSUR =	1038.5	PSUR =	1064.9
	MTOP =	0.77	MTOP =	0.79	MTOP =	0.78	MTOP =	0.80	MTOP =	0.78
Y,in.	U/UTOP	W/UTOP	U/UTOP	W/UTOP	U/UTOP	W/UTOP	U/UTOP	W/UTOP	U/UTOP	W/UTOP
0.240	0.6941	-0.2308	0.6606	-0.2682	0.6967	-0.2532	0.7059	-0.2402	0.6773	-0.2503
0.470	0.7506	-0.0727	0.7341	-0.1017	0.7642	-0.0984	0.7689	-0.1016	0.7446	-0.0983
0.970	0.7666	-0.1469	0.7892	-0.0938	0.7887	-0.1175	0.7953	-0.1038	0.7850	-0.0970
1.470	0.7646	-0.1964	0.8541	-0.2082	0.7929	-0.2135	0.8079	-0.2042	0.8117	-0.2105
1.960	0.7312	-0.0869	0.8478	-0.1868	0.7644	-0.1348	0.7741	-0.1396	0.7913	-0.1429
2.330	0.7363	-0.1382	0.8736	-0.2425	0.7942	-0.2263	0.7865	-0.1872	0.8024	-0.1562
2.990	0.7637	-0.1964	0.9064	-0.2464	0.8272	-0.2410	0.8316	-0.2460	0.8487	-0.2382
3.490	0.8418	-0.1603	0.9488	-0.2204	0.8814	-0.1639	0.8859	-0.1736	0.9189	-0.2336
3.990	0.8903	-0.2018	0.9771	-0.1992	0.9174	-0.2118	0.9356	-0.2153	0.9519	-0.2266
4.960	1.0000	-0.1573	1.0000	-0.1622	1.0000	-0.1654	1.0000	-0.1668	1.0000	-0.1687

Table K-2. Continued.

F111/MAW BOUNDARY LAYER DATA, FLT 230										
Time	09:01:21.000		09:01:21.500		09:01:24.000		09:01:25.000		09:01:28.500	
	Camber	4/7	Camber	4/7	Camber	1/4	Camber	1/4	Camber	0/3
	QINF =	440.0	QINF =	437.1	QINF =	434.1	QINF =	434.6	QINF =	433.2
	MINF =	0.734	MINF =	0.732	MINF =	0.731	MINF =	0.731	MINF =	0.732
	ALPT =	9.10	ALPT =	8.87	ALPT =	4.87	ALPT =	5.02	ALPT =	3.09
	BETA =	0.80	BETA =	0.86	BETA =	-1.51	BETA =	-0.56	BETA =	0.80
	H =	15565.	H =	15584.	H =	15682.	H =	15704.	H =	15848.
	TINF =	9.7	TINF =	9.7	TINF =	9.8	TINF =	9.7	TINF =	9.2
	RNPU =	3.3E+06	RNPU =	3.3E+06	RNPU =	3.2E+06	RNPU =	3.2E+06	RNPU =	3.2E+06
	PSUR =	1061.8	PSUR =	1067.3	PSUR =	1132.8	PSUR =	1133.9	PSUR =	1134.1
	MTOP =	0.78	MTOP =	0.78	MTOP =	0.75	MTOP =	0.76	MTOP =	0.75
Y,in.	U/UTOP	W/UTOP	U/UTOP	W/UTOP	U/UTOP	W/UTOP	U/UTOP	W/UTOP	U/UTOP	W/UTOP
0.240	0.6576	-0.2703	0.6681	-0.2729	0.5657	-0.2369	0.5802	-0.2335	0.6263	-0.2133
0.470	0.7211	-0.0895	0.7348	-0.1102	0.7047	-0.0467	0.7197	-0.0682	0.7580	-0.0723
0.970	0.7763	-0.0988	0.7773	-0.1003	0.8703	0.0777	0.8700	0.0715	0.9056	0.1008
1.470	0.8311	-0.2104	0.8193	-0.2127	0.9716	-0.1510	0.9676	-0.1650	0.9865	-0.1557
1.960	0.8402	-0.1441	0.8031	-0.1424	1.0090	-0.1873	1.0064	-0.1954	1.0085	-0.1941
2.330	0.8481	-0.1570	0.8312	-0.1847	0.9790	-0.1222	0.9779	-0.1320	0.9818	-0.1329
2.990	0.8903	-0.2347	0.8674	-0.2432	0.9857	-0.1904	0.9835	-0.2000	0.9851	-0.1971
3.490	0.9370	-0.2092	0.9251	-0.2112	1.0018	-0.1056	0.9902	-0.1267	0.9936	-0.1215
3.990	0.9758	-0.2313	0.9500	-0.2292	1.0005	-0.1183	1.0037	-0.1303	1.0044	-0.1211
4.960	1.0000	-0.1690	1.0000	-0.1692	1.0000	-0.0670	1.0000	-0.0740	1.0000	-0.0754

F111/MAW BOUNDARY LAYER DATA, FLT 230										
Time	09:01:29.000		09:01:29.500		09:01:35.500		09:01:36.500		09:01:37.500	
	Camber	0/3	Camber	0/3	Camber	1/3	Camber	1/3	Camber	1/3
	QINF =	433.7	QINF =	436.9	QINF =	449.3	QINF =	452.8	QINF =	456.3
	MINF =	0.733	MINF =	0.715	MINF =	0.746	MINF =	0.749	MINF =	0.751
	ALPT =	3.01	ALPT =	3.06	ALPT =	4.19	ALPT =	4.23	ALPT =	4.24
	BETA =	0.72	BETA =	0.74	BETA =	0.63	BETA =	0.66	BETA =	0.63
	H =	15871.	H =	14469.	H =	15865.	H =	15847.	H =	15828.
	TINF =	9.5	TINF =	11.3	TINF =	8.5	TINF =	8.6	TINF =	8.9
	RNPU =	3.2E+06	RNPU =	3.3E+06	RNPU =	3.3E+06	RNPU =	3.3E+06	RNPU =	3.3E+06
	PSUR =	1137.4	PSUR =	1137.4	PSUR =	1131.8	PSUR =	1131.8	PSUR =	1131.8
	MTOP =	0.75	MTOP =	0.75	MTOP =	0.77	MTOP =	0.77	MTOP =	0.77
Y,in.	U/UTOP	W/UTOP	U/UTOP	W/UTOP	U/UTOP	W/UTOP	U/UTOP	W/UTOP	U/UTOP	W/UTOP
0.240	0.6305	-0.2238	0.6343	-0.1947	0.6040	-0.2130	0.6094	-0.2380	0.5987	-0.2466
0.470	0.7602	-0.0626	0.7677	-0.0582	0.7318	-0.0838	0.7401	-0.0806	0.7254	-0.0843
0.970	0.9059	0.0999	0.9116	0.1034	0.8863	0.0827	0.8851	0.0806	0.8796	0.0789
1.470	0.9783	-0.1464	0.9840	-0.1540	0.9788	-0.1705	0.9775	-0.1744	0.9803	-0.1754
1.960	1.0005	-0.1942	1.0045	-0.1924	1.0085	-0.1974	1.0096	-0.2055	1.0047	-0.2102
2.330	0.9725	-0.1282	0.9770	-0.1228	0.9801	-0.1485	0.9803	-0.1491	0.9778	-0.1507
2.990	0.9781	-0.1930	0.9820	-0.1924	0.9857	-0.2011	0.9866	-0.2073	0.9833	-0.2085
3.490	0.9856	-0.1089	0.9904	-0.1082	0.9940	-0.1391	0.9943	-0.1440	0.9903	-0.1517
3.990	0.9966	-0.1138	1.0062	-0.0970	1.0136	-0.1450	1.0038	-0.1513	1.0079	-0.1453
4.960	1.0000	-0.0690	1.0000	-0.0681	1.0000	-0.0871	1.0000	-0.0878	1.0000	-0.0873

Table K-2. Continued.

F111/MAW BOUNDARY LAYER DATA, FLT 230										
Time	09:01:39.000		09:01:39.500		09:01:41.500		09:04:26.500		09:04:27.000	
	Camber	1/3	Camber	1/3	Camber	1/3	Camber	1/4/3/3	Camber	1/4/3/3
	QINF =	463.8	QINF =	465.3	QINF =	472.7	QINF =	478.5	QINF =	477.8
	MINF =	0.757	MINF =	0.758	MINF =	0.764	MINF =	0.767	MINF =	0.766
	ALPT =	4.24	ALPT =	4.24	ALPT =	4.21	ALPT =	4.97	ALPT =	4.94
	BETA =	0.63	BETA =	0.57	BETA =	1.29	BETA =	1.90	BETA =	1.53
	H =	15803.	H =	15793.	H =	15757.	H =	15651.	H =	15673.
	TINF =	8.8	TINF =	8.7	TINF =	8.7	TINF =	9.7	TINF =	10.0
	RNPU =	3.3E+06	RNPU =	3.4E+06	RNPU =	3.4E+06	RNPU =	3.4E+06	RNPU =	3.4E+06
	PSUR =	1131.8	PSUR =	1131.8	PSUR =	1132.9	PSUR =	1133.9	PSUR =	1133.9
	MTOP =	0.78	MTOP =	0.78	MTOP =	0.79	MTOP =	0.80	MTOP =	0.80
Y,in.	U/UTOP	W/UTOP	U/UTOP	W/UTOP	U/UTOP	W/UTOP	U/UTOP	W/UTOP	U/UTOP	W/UTOP
0.240	0.5982	-0.2540	0.5997	-0.2354	0.6070	-0.2254	0.5910	-0.2746	0.5953	-0.2848
0.470	0.7256	-0.0828	0.7296	-0.0867	0.7345	-0.0980	0.7079	-0.1208	0.7123	-0.1039
0.970	0.8814	0.0799	0.8796	0.0798	0.8798	0.0770	0.8564	0.0549	0.8559	0.0579
1.470	0.9744	-0.1715	0.9738	-0.1728	0.9772	-0.1791	0.9665	-0.2069	0.9683	-0.2024
1.960	1.0063	-0.2040	1.0047	-0.2065	1.0039	-0.2125	1.0018	-0.2292	1.0013	-0.2225
2.330	0.9772	-0.1479	0.9765	-0.1462	0.9793	-0.1549	0.9760	-0.1860	0.9768	-0.1822
2.990	0.9840	-0.2100	0.9829	-0.2092	0.9875	-0.2169	0.9838	-0.2371	0.9841	-0.2323
3.490	0.9886	-0.1410	0.9896	-0.1213	0.9956	-0.1826	0.9902	-0.2006	0.9907	-0.1943
3.990	1.0001	-0.1361	1.0001	-0.1381	1.0010	-0.1522	0.9988	-0.1731	0.9984	-0.1737
4.960	1.0000	-0.0850	1.0000	-0.0861	1.0000	-0.0949	1.0000	-0.1173	1.0000	-0.1144

F111/MAW BOUNDARY LAYER DATA, FLT 230										
Time	09:04:27.500		09:04:35.000		09:04:35.500		09:04:36.000		09:07:50.000	
	Camber	1/4/3/3	Camber	1/4/5/5	Camber	1/4/5/5	Camber	1/4/5/5	Camber	0/3/4/4
	QINF =	477.8	QINF =	449.9	QINF =	450.4	QINF =	451.3	QINF =	519.0
	MINF =	0.767	MINF =	0.747	MINF =	0.747	MINF =	0.748	MINF =	0.788
	ALPT =	5.00	ALPT =	4.91	ALPT =	5.16	ALPT =	4.96	ALPT =	4.12
	BETA =	1.47	BETA =	0.40	BETA =	-0.65	BETA =	-1.11	BETA =	0.08
	H =	15684.	H =	15866.	H =	15878.	H =	15890.	H =	15035.
	TINF =	9.7	TINF =	8.8	TINF =	8.7	TINF =	8.6	TINF =	10.5
	RNPU =	3.4E+06	RNPU =	3.3E+06	RNPU =	3.3E+06	RNPU =	3.3E+06	RNPU =	3.6E+06
	PSUR =	1130.6	PSUR =	1112.1	PSUR =	1120.8	PSUR =	1116.5	PSUR =	1165.3
	MTOP =	0.80	MTOP =	0.79	MTOP =	0.78	MTOP =	0.78	MTOP =	0.81
Y,in.	U/UTOP	W/UTOP	U/UTOP	W/UTOP	U/UTOP	W/UTOP	U/UTOP	W/UTOP	U/UTOP	W/UTOP
0.240	0.5727	-0.2684	0.5353	-0.3008	0.5256	-0.2530	0.5305	-0.2554	0.5704	-0.2292
0.470	0.6958	-0.1093	0.6752	-0.0686	0.6589	-0.0657	0.6697	-0.0538	0.7020	-0.0852
0.970	0.8456	0.0503	0.8528	0.0627	0.8394	0.0624	0.8475	0.0682	0.8703	0.0896
1.470	0.9527	-0.2050	0.9659	-0.1948	0.9639	-0.1770	0.9587	-0.1686	0.9661	-0.1599
1.960	0.9968	-0.2256	1.0084	-0.2098	1.0051	-0.2045	1.0042	-0.1968	1.0010	-0.2070
2.330	0.9709	-0.1773	0.9792	-0.1607	0.9783	-0.1546	0.9784	-0.1411	0.9756	-0.1436
2.990	0.9777	-0.2317	0.9838	-0.2171	0.9844	-0.2085	0.9834	-0.1945	0.9801	-0.1962
3.490	0.9829	-0.1874	0.9950	-0.1598	0.9932	-0.1506	0.9920	-0.1317	0.9808	-0.1521
3.990	0.9924	-0.1727	1.0041	-0.1570	1.0061	-0.1528	0.9995	-0.1350	0.9937	-0.1278
4.960	1.0000	-0.1090	1.0000	-0.0986	1.0000	-0.0893	1.0000	-0.0784	1.0000	-0.0811

Table K-2. Continued.

F111/MAW BOUNDARY LAYER DATA, FLT 230										
Time	09:07:50.500		09:07:51.000		09:07:56.500		09:07:57.000		09:08:17.500	
	Camber	0/3/4/4	Camber	0/3/4/4	Camber	2/5/4/5	Camber	2/5	Camber	3/5/5/6
	QINF =	519.9	QINF =	520.8	QINF =	523.9	QINF =	523.0	QINF =	253.6
	MINF =	0.789	MINF =	0.790	MINF =	0.792	MINF =	0.791	MINF =	0.595
	ALPT =	4.13	ALPT =	4.22	ALPT =	6.69	ALPT =	6.75	ALPT =	6.13
	BETA =	-0.38	BETA =	-0.62	BETA =	0.45	BETA =	0.63	BETA =	0.69
	H =	15047.	H =	15048.	H =	15029.	H =	15028.	H =	18739.
	TINF =	10.8	TINF =	10.3	TINF =	10.4	TINF =	10.8	TINF =	0.2
	RNPU =	3.6E+06	RNPU =	3.6E+06	RNPU =	3.6E+06	RNPU =	3.6E+06	RNPU =	2.4E+06
	PSUR =	1166.4	PSUR =	1167.5	PSUR =	1114.5	PSUR =	1100.2	PSUR =	991.9
	MTOP =	0.81	MTOP =	0.81	MTOP =	0.86	MTOP =	0.87	MTOP =	0.63
Y,in.	U/UTOP	W/UTOP	U/UTOP	W/UTOP	U/UTOP	W/UTOP	U/UTOP	W/UTOP	U/UTOP	W/UTOP
0.240	0.5705	-0.2130	0.5657	-0.2057	0.6091	-0.3252	0.6223	-0.3168	0.5781	-0.4771
0.470	0.7018	-0.0719	0.7035	-0.0705	0.6862	-0.1412	0.7081	-0.1449	0.7278	-0.0210
0.970	0.8708	0.0914	0.8727	0.0932	0.8093	0.0028	0.8140	0.0032	0.8694	0.0313
1.470	0.9661	-0.1503	0.9667	-0.1434	0.9198	-0.2253	0.9166	-0.2200	0.9911	-0.2196
1.960	1.0000	-0.2013	1.0000	-0.1998	0.9793	-0.2317	0.9781	-0.2182	1.0271	-0.2012
2.330	0.9735	-0.1347	0.9723	-0.1339	0.9784	-0.2063	0.9785	-0.2079	0.9920	-0.1905
2.990	0.9793	-0.1898	0.9779	-0.1900	0.9864	-0.2490	0.9874	-0.2436	0.9977	-0.2561
3.490	0.9833	-0.1343	0.9855	-0.1235	0.9894	-0.2355	0.9922	-0.2298	1.0184	-0.1472
3.990	0.9984	-0.1268	0.9988	-0.1233	1.0019	-0.2066	1.0004	-0.2047	1.0010	-0.1836
4.960	1.0000	-0.0739	1.0000	-0.0689	1.0000	-0.1356	1.0000	-0.1382	1.0000	-0.1232

F111/MAW BOUNDARY LAYER DATA, FLT 230										
Time	09:08:18.000		09:08:18.500		09:08:19.000		09:08:28.000		09:08:28.500	
	Camber	3/5	Camber	3/5	Camber	3/5	Camber	2/4	Camber	2/4
	QINF =	247.2	QINF =	240.9	QINF =	234.6	QINF =	161.3	QINF =	159.4
	MINF =	0.589	MINF =	0.583	MINF =	0.578	MINF =	0.500	MINF =	0.498
	ALPT =	6.07	ALPT =	6.02	ALPT =	5.67	ALPT =	5.12	ALPT =	5.19
	BETA =	0.43	BETA =	0.22	BETA =	0.22	BETA =	0.57	BETA =	0.54
	H =	18898.	H =	19058.	H =	19218.	H =	21301.	H =	21366.
	TINF =	-0.6	TINF =	-1.1	TINF =	-1.9	TINF =	-10.8	TINF =	-11.0
	RNPU =	2.4E+06	RNPU =	2.3E+06	RNPU =	2.3E+06	RNPU =	1.9E+06	RNPU =	1.9E+06
	PSUR =	990.9	PSUR =	984.4	PSUR =	982.2	PSUR =	906.0	PSUR =	903.8
	MTOP =	0.62	MTOP =	0.61	MTOP =	0.60	MTOP =	0.52	MTOP =	0.51
Y,in.	U/UTOP	W/UTOP	U/UTOP	W/UTOP	U/UTOP	W/UTOP	U/UTOP	W/UTOP	U/UTOP	W/UTOP
0.240	0.5669	-0.3570	0.6063	-0.4600	0.6189	-0.4531	0.7175	-0.5752	0.7200	-0.5593
0.470	0.6992	0.0012	0.7399	-0.0186	0.7584	-0.0139	0.8226	0.0704	0.8403	0.0746
0.970	0.8680	0.0335	0.8823	0.0402	0.8952	0.0550	0.9624	0.0869	0.9680	0.0849
1.470	0.9872	-0.2252	0.9976	-0.2302	1.0001	-0.2048	1.0499	-0.2300	1.0526	-0.2512
1.960	1.0218	-0.1986	1.0370	-0.1960	1.0383	-0.1867	1.0757	-0.1664	1.0795	-0.1669
2.330	0.9928	-0.1837	1.0000	-0.1709	1.0031	-0.1561	1.0194	-0.1397	1.0317	-0.1397
2.990	0.9954	-0.2645	1.0071	-0.2642	1.0091	-0.2349	1.0277	-0.2724	1.0398	-0.2673
3.490	1.0221	-0.1770	1.0313	-0.1143	1.0333	-0.1013	1.0626	-0.1048	1.0730	-0.0416
3.990	0.9948	-0.1812	1.0102	-0.1988	1.0054	-0.1641	1.0041	-0.1308	1.0119	-0.1391
4.960	1.0000	-0.1110	1.0000	-0.1097	1.0000	-0.0979	1.0000	-0.0888	1.0000	-0.0945

Table K-2. Continued.

F111/MAW BOUNDARY LAYER DATA, FLT 230										
Time	09:08:29.000		09:08:29.500		09:08:30.000		09:08:34.000		09:08:34.500	
	Camber	2/4/4/5	Camber	2/4/4/5	Camber	2/4	Camber	2/5	Camber	2/5
	QINF =	157.6	QINF =	155.8	QINF =	154.1	QINF =	147.5	QINF =	147.4
	MINF =	0.496	MINF =	0.494	MINF =	0.492	MINF =	0.484	MINF =	0.484
	ALPT =	5.17	ALPT =	5.14	ALPT =	5.18	ALPT =	5.54	ALPT =	5.53
	BETA =	0.40	BETA =	0.25	BETA =	0.22	BETA =	0.66	BETA =	0.69
	H =	21431.	H =	21495.	H =	21560.	H =	21863.	H =	21885.
	TINF =	-11.1	TINF =	-11.7	TINF =	-12.2	TINF =	-13.7	TINF =	-14.1
	RNPU =	1.8E+06	RNPU =	1.8E+06	RNPU =	1.8E+06	RNPU =	1.8E+06	RNPU =	1.8E+06
	PSUR =	899.4	PSUR =	896.1	PSUR =	898.3	PSUR =	881.9	PSUR =	880.8
	MTOP =	0.51	MTOP =	0.51	MTOP =	0.51	MTOP =	0.50	MTOP =	0.51
Y,in.	U/UTOP	W/UTOP	U/UTOP	W/UTOP	U/UTOP	W/UTOP	U/UTOP	W/UTOP	U/UTOP	W/UTOP
0.240	0.5757	0.3162	0.7148	-0.5552	0.5236	0.4605	0.7714	0.4710	0.5100	0.4868
0.470	0.8430	0.0640	0.8376	0.1067	0.8137	0.0572	0.8459	0.0870	0.8306	0.0712
0.970	0.9834	0.0833	0.9698	0.0865	0.9590	0.0871	0.9649	0.0776	0.9643	0.0747
1.470	1.0571	-0.2756	1.0458	-0.2334	1.0333	-0.2418	1.0697	-0.2346	1.0471	-0.2634
1.960	1.0892	-0.1682	1.0759	-0.1643	1.0805	-0.1571	1.0803	-0.1691	1.0795	-0.1707
2.330	1.0343	-0.1211	1.0320	-0.1270	1.0122	-0.1340	1.0379	-0.1337	1.0373	-0.1357
2.990	1.0315	-0.2924	1.0274	-0.2680	1.0177	-0.2659	1.0371	-0.2968	1.0346	-0.3011
3.490	1.0627	-0.0541	1.0594	-0.0456	1.0394	-0.0224	1.0726	-0.0600	1.0626	-0.0802
3.990	1.0110	-0.1495	1.0293	-0.1276	0.9853	-0.1162	1.0487	-0.1687	0.9853	-0.1453
4.960	1.0000	-0.0897	1.0000	-0.0967	1.0000	-0.0702	1.0000	-0.0942	1.0000	-0.1005

F111/MAW BOUNDARY LAYER DATA, FLT 230										
Time	09:08:35.000		09:08:35.500		09:11:18.000		09:11:18.500		09:11:19.000	
	Camber	2/5	Camber	2/5	Camber	2/5/5/-1	Camber	2/5/5/-1	Camber	2/5/5/-1
	QINF =	147.4	QINF =	147.5	QINF =	524.5	QINF =	523.2	QINF =	521.0
	MINF =	0.484	MINF =	0.485	MINF =	0.791	MINF =	0.790	MINF =	0.789
	ALPT =	5.49	ALPT =	5.54	ALPT =	7.33	ALPT =	7.01	ALPT =	7.14
	BETA =	0.74	BETA =	0.83	BETA =	0.25	BETA =	0.31	BETA =	0.48
	H =	21896.	H =	21919.	H =	14951.	H =	14961.	H =	14970.
	TINF =	-14.1	TINF =	-13.8	TINF =	10.5	TINF =	10.6	TINF =	10.5
	RNPU =	1.8E+06	RNPU =	1.8E+06	RNPU =	3.6E+06	RNPU =	3.6E+06	RNPU =	3.6E+06
	PSUR =	880.8	PSUR =	883.0	PSUR =	1134.2	PSUR =	1133.1	PSUR =	1133.1
	MTOP =	0.51	MTOP =	0.51	MTOP =	0.83	MTOP =	0.83	MTOP =	0.83
Y,in.	U/UTOP	W/UTOP	U/UTOP	W/UTOP	U/UTOP	W/UTOP	U/UTOP	W/UTOP	U/UTOP	W/UTOP
0.240	0.7729	0.4719	0.6812	-0.5232	0.7044	-0.3403	0.7049	-0.3218	0.7072	-0.3380
0.470	0.8161	0.0777	0.7993	0.0761	0.7812	-0.2461	0.7816	-0.2415	0.7849	-0.2388
0.970	0.9646	0.0776	0.9471	0.0696	0.7948	-0.0218	0.7854	-0.0164	0.7947	-0.0162
1.470	1.0536	-0.2518	1.0415	-0.2506	0.8673	-0.2642	0.8389	-0.2663	0.8527	-0.2668
1.960	1.0795	-0.1707	1.0773	-0.1517	0.8715	-0.2678	0.8459	-0.2523	0.8620	-0.2584
2.330	1.0373	-0.1357	1.0202	-0.1334	0.9024	-0.3426	0.8738	-0.2941	0.8784	-0.2935
2.990	1.0367	-0.2973	1.0071	-0.2869	0.9363	-0.3123	0.9176	-0.3045	0.9201	-0.3139
3.490	1.0677	-0.0837	1.0503	-0.0772	0.9670	-0.3477	0.9612	-0.3247	0.9640	-0.3670
3.990	1.0001	-0.1521	0.9831	-0.1495	0.9906	-0.3063	0.9849	-0.3075	0.9905	-0.3067
4.960	1.0000	-0.1005	1.0000	-0.0844	1.0000	-0.1951	1.0000	-0.1976	1.0000	-0.2029

Table K-2. Continued.

F111/MAW BOUNDARY LAYER DATA, FLT 230										
Time	09:11:19.500		08:46:19.000		08:46:20.500		08:46:25.500		08:46:26.500	
	Camber	2/5/5/-1	Camber	0/2	Camber	0/2	Camber	0/2	Camber	0/2
	QINF =	518.6	QINF =	596.6	QINF =	592.6	QINF =	588.8	QINF =	588.2
	MINF =	0.787	MINF =	0.796	MINF =	0.793	MINF =	0.791	MINF =	0.791
	ALPT =	7.32	ALPT =	3.98	ALPT =	4.02	ALPT =	4.06	ALPT =	4.05
	BETA =	0.40	BETA =	0.51	BETA =	0.60	BETA =	0.43	BETA =	0.48
	H =	14978.	H =	12014.	H =	12022.	H =	12052.	H =	12051.
	TINF =	10.4	TINF =	21.5	TINF =	21.8	TINF =	21.7	TINF =	22.1
	RNPU =	3.6E+06	RNPU =	4.0E+06	RNPU =	3.9E+06	RNPU =	3.9E+06	RNPU =	3.9E+06
	PSUR =	1127.7	PSUR =	1329.8	PSUR =	1328.7	PSUR =	1324.4	PSUR =	1324.4
	MTOP =	0.83	MTOP =	0.81	MTOP =	0.81	MTOP =	0.81	MTOP =	0.81
Y,in.	U/UTOP	W/UTOP	U/UTOP	W/UTOP	U/UTOP	W/UTOP	U/UTOP	W/UTOP	U/UTOP	W/UTOP
0.240	0.7032	-0.3293	0.6155	-0.1817	0.6180	-0.1841	0.6230	-0.1891	0.6247	-0.1998
0.470	0.7791	-0.2373	0.7445	-0.0809	0.7425	-0.0936	0.7491	-0.0882	0.7453	-0.0909
0.970	0.7907	-0.0239	0.8874	0.1013	0.8870	0.0963	0.8908	0.0979	0.8882	0.0990
1.470	0.8458	-0.2682	0.9683	-0.1418	0.9661	-0.1469	0.9682	-0.1452	0.9692	-0.1444
1.960	0.8478	-0.2629	0.9951	-0.2034	0.9948	-0.2047	0.9963	-0.2025	0.9964	-0.2033
2.330	0.8781	-0.2906	0.9695	-0.1348	0.9666	-0.1406	0.9704	-0.1371	0.9702	-0.1351
2.990	0.9212	-0.3119	0.9738	-0.1880	0.9743	-0.1864	0.9755	-0.1888	0.9752	-0.1901
3.490	0.9655	-0.3274	0.9805	-0.1494	0.9808	-0.1448	0.9817	-0.1342	0.9807	-0.1372
3.990	0.9955	-0.3086	0.9973	-0.1191	0.9890	-0.1169	0.9988	-0.1206	1.0041	-0.1198
4.960	1.0000	-0.1968	1.0000	-0.0723	1.0000	-0.0771	1.0000	-0.0739	1.0000	-0.0739

F111/MAW BOUNDARY LAYER DATA, FLT 230										
Time	08:46:27.500		08:46:44.500		08:46:45.000		08:46:46.500		08:46:48.000	
	Camber	0/2	Camber	5/6	Camber	5/6	Camber	5/6	Camber	5/6
	QINF =	587.2	QINF =	608.5	QINF =	609.5	QINF =	608.2	QINF =	606.2
	MINF =	0.790	MINF =	0.806	MINF =	0.807	MINF =	0.806	MINF =	0.804
	ALPT =	4.01	ALPT =	3.52	ALPT =	3.52	ALPT =	3.53	ALPT =	3.53
	BETA =	0.60	BETA =	0.28	BETA =	0.31	BETA =	0.22	BETA =	0.40
	H =	12061.	H =	12149.	H =	12150.	H =	12148.	H =	12146.
	TINF =	22.6	TINF =	23.2	TINF =	23.1	TINF =	23.2	TINF =	23.4
	RNPU =	3.9E+06	RNPU =	4.0E+06	RNPU =	4.0E+06	RNPU =	4.0E+06	RNPU =	4.0E+06
	PSUR =	1323.3	PSUR =	1216.7	PSUR =	1206.8	PSUR =	1200.2	PSUR =	1209.0
	MTOP =	0.81	MTOP =	0.89	MTOP =	0.90	MTOP =	0.91	MTOP =	0.90
Y,in.	U/UTOP	W/UTOP	U/UTOP	W/UTOP	U/UTOP	W/UTOP	U/UTOP	W/UTOP	U/UTOP	W/UTOP
0.240	0.6274	-0.2106	0.6562	-0.2143	0.6661	-0.2092	0.6823	-0.2210	0.6735	-0.2167
0.470	0.7507	-0.0884	0.7432	-0.1027	0.7548	-0.1053	0.7648	-0.1103	0.7571	-0.1131
0.970	0.8894	0.0974	0.8126	0.0572	0.8273	0.0611	0.8290	0.0584	0.8293	0.0599
1.470	0.9686	-0.1452	0.8633	-0.1552	0.8860	-0.1525	0.8804	-0.1477	0.8918	-0.1614
1.960	0.9959	-0.2046	0.9067	-0.1684	0.9236	-0.1892	0.9144	-0.1767	0.9328	-0.1911
2.330	0.9706	-0.1379	0.9088	-0.1607	0.9175	-0.1469	0.9094	-0.1577	0.9170	-0.1430
2.990	0.9759	-0.1893	0.9305	-0.2081	0.9404	-0.2102	0.9295	-0.2064	0.9371	-0.2091
3.490	0.9828	-0.1287	0.9498	-0.1704	0.9629	-0.1932	0.9487	-0.1923	0.9529	-0.1992
3.990	0.9960	-0.1198	0.9805	-0.1779	0.9874	-0.1696	0.9812	-0.1734	0.9844	-0.1740
4.960	1.0000	-0.0759	1.0000	-0.1186	1.0000	-0.1161	1.0000	-0.1175	1.0000	-0.1191

Table K-2. Continued.

F111/MAW BOUNDARY LAYER DATA, FLT 230										
Time	08:46:49.500		08:46:55.000		08:47:24.000		08:47:32.500		08:48:03.500	
	Camber	5/6	Camber	5/6	Camber	0/2	Camber	0/2	Camber	0/2
	QINF =	605.2	QINF =	602.8	QINF =	604.6	QINF =	601.7	QINF =	600.9
	MINF =	0.804	MINF =	0.802	MINF =	0.805	MINF =	0.800	MINF =	0.799
	ALPT =	3.53	ALPT =	3.53	ALPT =	4.02	ALPT =	4.03	ALPT =	4.02
	BETA =	0.34	BETA =	0.40	BETA =	0.63	BETA =	0.74	BETA =	0.66
	H =	12145.	H =	12154.	H =	12123.	H =	12064.	H =	12019.
	TINF =	23.1	TINF =	23.3	TINF =	21.2	TINF =	20.2	TINF =	20.7
	RNPU =	4.0E+06	RNPU =	3.9E+06	RNPU =	4.0E+06	RNPU =	4.0E+06	RNPU =	4.0E+06
	PSUR =	1212.3	PSUR =	1201.3	PSUR =	1323.4	PSUR =	1326.6	PSUR =	1326.6
	MTOP =	0.90	MTOP =	0.90	MTOP =	0.82	MTOP =	0.81	MTOP =	0.81
Y,in.	U/UTOP	W/UTOP	U/UTOP	W/UTOP	U/UTOP	W/UTOP	U/UTOP	W/UTOP	U/UTOP	W/UTOP
0.240	0.6754	-0.2286	0.6681	-0.2244	0.6202	-0.1848	0.6282	-0.1871	0.6223	-0.1773
0.470	0.7574	-0.1173	0.7523	-0.1139	0.7452	-0.0815	0.7490	-0.0896	0.7441	-0.0826
0.970	0.8226	0.0539	0.8209	0.0557	0.8919	0.1050	0.8917	0.1016	0.8921	0.1064
1.470	0.8766	-0.1626	0.8796	-0.1599	0.9729	-0.1312	0.9658	-0.1468	0.9644	-0.1498
1.960	0.9102	-0.1844	0.9162	-0.1844	0.9945	-0.2025	0.9950	-0.2039	0.9948	-0.2063
2.330	0.9067	-0.1641	0.9122	-0.1570	0.9685	-0.1330	0.9698	-0.1353	0.9714	-0.1317
2.990	0.9292	-0.2115	0.9343	-0.2133	0.9743	-0.1865	0.9749	-0.1910	0.9765	-0.1889
3.490	0.9505	-0.1905	0.9577	-0.1841	0.9803	-0.1321	0.9816	-0.1326	0.9789	-0.1346
3.990	0.9833	-0.1766	0.9814	-0.1781	0.9981	-0.1189	0.9965	-0.1211	0.9993	-0.1141
4.960	1.0000	-0.1200	1.0000	-0.1208	1.0000	-0.0711	1.0000	-0.0738	1.0000	-0.0721

F111/MAW BOUNDARY LAYER DATA, FLT 230										
Time	08:48:18.000		08:48:18.500		08:48:19.000		08:48:20.000		08:48:27.500	
	Camber	0/2	Camber	0/2	Camber	0/2	Camber	0/2	Camber	0/2
	QINF =	600.1	QINF =	599.9	QINF =	599.2	QINF =	596.9	QINF =	573.1
	MINF =	0.795	MINF =	0.795	MINF =	0.795	MINF =	0.793	MINF =	0.783
	ALPT =	5.25	ALPT =	4.92	ALPT =	4.84	ALPT =	5.06	ALPT =	5.89
	BETA =	1.15	BETA =	0.98	BETA =	1.01	BETA =	0.83	BETA =	0.80
	H =	11828.	H =	11816.	H =	11816.	H =	11814.	H =	12171.
	TINF =	21.5	TINF =	21.6	TINF =	21.6	TINF =	21.5	TINF =	20.9
	RNPU =	4.0E+06	RNPU =	4.0E+06	RNPU =	4.0E+06	RNPU =	4.0E+06	RNPU =	3.9E+06
	PSUR =	1332.8	PSUR =	1333.9	PSUR =	1333.9	PSUR =	1332.8	PSUR =	1310.3
	MTOP =	0.81	MTOP =	0.81	MTOP =	0.81	MTOP =	0.81	MTOP =	0.81
Y,in.	U/UTOP	W/UTOP	U/UTOP	W/UTOP	U/UTOP	W/UTOP	U/UTOP	W/UTOP	U/UTOP	W/UTOP
0.240	0.6233	-0.2057	0.6300	-0.2100	0.6253	-0.2230	0.6257	-0.2065	0.6141	-0.2199
0.470	0.7385	-0.1021	0.7451	-0.1049	0.7417	-0.1001	0.7409	-0.0976	0.7276	-0.0961
0.970	0.8727	0.0786	0.8799	0.0808	0.8759	0.0820	0.8741	0.0764	0.8661	0.0697
1.470	0.9642	-0.1695	0.9665	-0.1630	0.9666	-0.1581	0.9625	-0.1630	0.9563	-0.1704
1.960	0.9959	-0.2199	0.9979	-0.2173	0.9960	-0.2146	0.9977	-0.2153	0.9972	-0.2138
2.330	0.9708	-0.1579	0.9722	-0.1590	0.9705	-0.1555	0.9718	-0.1552	0.9697	-0.1692
2.990	0.9767	-0.2088	0.9789	-0.2071	0.9767	-0.2023	0.9777	-0.2032	0.9756	-0.2137
3.490	0.9800	-0.1649	0.9824	-0.1644	0.9804	-0.1575	0.9772	-0.1696	0.9818	-0.1584
3.990	1.0010	-0.1407	1.0010	-0.1388	0.9994	-0.1378	1.0004	-0.1371	1.0000	-0.1400
4.960	1.0000	-0.0886	1.0000	-0.0895	1.0000	-0.0889	1.0000	-0.0887	1.0000	-0.0913

Table K-2. Continued.

F111/MAW BOUNDARY LAYER DATA, FLT 230						
Time	08:48:28.000		08:48:28.500		08:48:29.000	
	Camber	0/2	Camber	0/2	Camber	0/2
	QINF =	570.6	QINF =	568.2	QINF =	565.2
	MINF =	0.782	MINF =	0.781	MINF =	0.779
	ALPT =	5.98	ALPT =	5.96	ALPT =	5.86
	BETA =	0.95	BETA =	0.92	BETA =	0.74
	H =	12213.	H =	12267.	H =	12320.
	TINF =	21.0	TINF =	20.8	TINF =	20.6
	RNPU =	3.9E+06	RNPU =	3.9E+06	RNPU =	3.8E+06
	PSUR =	1309.2	PSUR =	1309.2	PSUR =	1309.2
	MTOP =	0.81	MTOP =	0.80	MTOP =	0.80
Y,in.	U/UTOP	W/UTOP	U/UTOP	W/UTOP	U/UTOP	W/UTOP
0.240	0.6131	-0.2260	0.6157	-0.2223	0.6170	-0.2207
0.470	0.7277	-0.1016	0.7295	-0.1007	0.7365	-0.0966
0.970	0.8514	0.0604	0.8591	0.0646	0.8630	0.0673
1.470	0.9503	-0.1670	0.9588	-0.1698	0.9590	-0.1709
1.960	0.9887	-0.2182	0.9963	-0.2168	0.9990	-0.2167
2.330	0.9649	-0.1655	0.9711	-0.1669	0.9721	-0.1679
2.990	0.9713	-0.2114	0.9778	-0.2147	0.9784	-0.2122
3.490	0.9770	-0.1592	0.9836	-0.1689	0.9833	-0.1450
3.990	0.9949	-0.1439	0.9992	-0.1447	1.0012	-0.1472
4.960	1.0000	-0.0922	1.0000	-0.0958	1.0000	-0.0933

F111/MAW BOUNDARY LAYER DATA, FLT 231										
Time	13:03:14.500		13:03:30.000		13:03:31.500		13:03:32.500		13:03:42.000	
	Camber	0/2	Camber	0/2	Camber	0/2	Camber	0/2	Camber	0/2
	QINF =	601.0	QINF =	595.6	QINF =	593.3	QINF =	593.0	QINF =	597.7
	MINF =	0.799	MINF =	0.795	MINF =	0.794	MINF =	0.793	MINF =	0.796
	ALPT =	4.01	ALPT =	4.01	ALPT =	4.02	ALPT =	4.02	ALPT =	3.04
	BETA =	0.48	BETA =	0.48	BETA =	0.40	BETA =	0.40	BETA =	0.48
	H =	11996.	H =	12002.	H =	12000.	H =	12000.	H =	11982.
	TINF =	22.1	TINF =	22.6	TINF =	22.5	TINF =	22.2	TINF =	21.4
	RNPU =	4.0E+06	RNPU =	3.9E+06	RNPU =	3.9E+06	RNPU =	3.9E+06	RNPU =	4.0E+06
	PSUR =	1326.6	PSUR =	1329.8	PSUR =	1329.8	PSUR =	1327.6	PSUR =	1337.5
	MTOP =	0.82	MTOP =	0.81	MTOP =	0.81	MTOP =	0.81	MTOP =	0.81
Y,in.	U/UTOP	W/UTOP	U/UTOP	W/UTOP	U/UTOP	W/UTOP	U/UTOP	W/UTOP	U/UTOP	W/UTOP
0.240	0.6338	-0.1589	0.6337	-0.1659	0.6306	-0.1703	0.6322	-0.1595	0.6394	-0.1492
0.470	0.7337	-0.1305	0.7360	-0.1412	0.7370	-0.1332	0.7359	-0.1317	0.7430	-0.1109
0.970	0.8914	0.0875	0.8932	0.0882	0.8910	0.0876	0.8918	0.0872	0.9104	0.1086
1.470	0.9904	-0.1294	0.9886	-0.1365	0.9878	-0.1375	0.9872	-0.1348	0.9906	-0.1208
1.960	1.0116	-0.1892	1.0112	-0.1878	1.0120	-0.1923	1.0107	-0.1852	1.0117	-0.1801
2.330	1.0022	-0.1122	1.0024	-0.1081	1.0033	-0.1099	0.9997	-0.1084	0.9996	-0.0956
2.990	1.0100	-0.1798	1.0103	-0.1817	1.0110	-0.1804	1.0076	-0.1806	1.0060	-0.1670
3.490	0.9984	-0.1187	0.9989	-0.1263	0.9967	-0.1235	0.9965	-0.1263	0.9944	-0.1055
3.990	0.9942	-0.1118	0.9992	-0.1086	0.9977	-0.1047	0.9960	-0.1069	0.9948	-0.0885
4.960	1.0000	-0.0948	1.0000	-0.0978	1.0000	-0.0956	1.0000	-0.0924	1.0000	-0.0823

Table K-2. Continued.

F111/MAW BOUNDARY LAYER DATA, FLT 231										
Time	13:03:43.000		13:03:47.000		13:03:47.500		13:03:49.500		13:03:50.000	
	Camber	0/2	Camber	0/2	Camber	0/2	Camber	0/2	Camber	0/2
	QINF =	597.1	QINF =	616.0	QINF =	619.2	QINF =	639.9	QINF =	641.8
	MINF =	0.795	MINF =	0.804	MINF =	0.805	MINF =	0.814	MINF =	0.815
	ALPT =	3.02	ALPT =	3.06	ALPT =	3.07	ALPT =	5.95	ALPT =	6.40
	BETA =	0.48	BETA =	0.31	BETA =	0.37	BETA =	0.51	BETA =	0.40
	H =	11959.	H =	11686.	H =	11633.	H =	11384.	H =	11330.
	TINF =	21.9	TINF =	24.2	TINF =	24.0	TINF =	24.8	TINF =	25.1
	RNPU =	4.0E+06	RNPU =	4.0E+06	RNPU =	4.0E+06	RNPU =	4.1E+06	RNPU =	4.1E+06
	PSUR =	1336.4	PSUR =	1354.7	PSUR =	1357.8	PSUR =	1356.4	PSUR =	1357.3
	MTOP =	0.81	MTOP =	0.82	MTOP =	0.81	MTOP =	0.83	MTOP =	0.83
Y,in.	U/UTOP	W/UTOP	U/UTOP	W/UTOP	U/UTOP	W/UTOP	U/UTOP	W/UTOP	U/UTOP	W/UTOP
0.240	0.6453	-0.1508	0.6375	-0.1392	0.6428	-0.1486	0.6073	-0.1741	0.6156	-0.1810
0.470	0.7510	-0.1175	0.7449	-0.1063	0.7513	-0.1112	0.7056	-0.1663	0.7084	-0.1621
0.970	0.9114	0.1083	0.9080	0.1089	0.9078	0.1109	0.8554	0.0501	0.8435	0.0488
1.470	0.9969	-0.1125	0.9893	-0.1168	0.9924	-0.1178	0.9691	-0.1648	0.9508	-0.1707
1.960	1.0108	-0.1808	1.0080	-0.1831	1.0124	-0.1814	1.0109	-0.2080	1.0038	-0.2107
2.330	0.9994	-0.0935	0.9966	-0.0917	1.0007	-0.0913	0.9919	-0.1375	0.9973	-0.1427
2.990	1.0063	-0.1650	0.9918	-0.1759	0.9916	-0.1774	0.9804	-0.2345	0.9810	-0.2382
3.490	0.9931	-0.1039	0.9928	-0.1063	0.9957	-0.1065	0.9969	-0.1571	0.9967	-0.1670
3.990	0.9973	-0.0895	0.9940	-0.0887	0.9998	-0.0873	0.9975	-0.1404	0.9966	-0.1495
4.960	1.0000	-0.0776	1.0000	-0.0763	1.0000	-0.0799	1.0000	-0.1179	1.0000	-0.1275

F111/MAW BOUNDARY LAYER DATA, FLT 231										
Time	13:03:50.500		13:03:51.000		13:03:51.500		13:03:52.000		13:03:52.500	
	Camber	0/2	Camber	0/2	Camber	0/2	Camber	0/2	Camber	0/2
	QINF =	642.7	QINF =	641.4	QINF =	639.1	QINF =	634.6	QINF =	628.4
	MINF =	0.814	MINF =	0.813	MINF =	0.811	MINF =	0.808	MINF =	0.805
	ALPT =	6.86	ALPT =	7.20	ALPT =	7.43	ALPT =	7.69	ALPT =	8.08
	BETA =	0.40	BETA =	0.51	BETA =	0.60	BETA =	0.57	BETA =	0.66
	H =	11286.	H =	11251.	H =	11227.	H =	11223.	H =	11239.
	TINF =	25.8	TINF =	26.0	TINF =	26.3	TINF =	26.0	TINF =	26.5
	RNPU =	4.1E+06	RNPU =	4.1E+06	RNPU =	4.1E+06	RNPU =	4.1E+06	RNPU =	4.1E+06
	PSUR =	1357.2	PSUR =	1360.4	PSUR =	1363.5	PSUR =	1363.4	PSUR =	1359.0
	MTOP =	0.83	MTOP =	0.82	MTOP =	0.82	MTOP =	0.81	MTOP =	0.80
Y,in.	U/UTOP	W/UTOP	U/UTOP	W/UTOP	U/UTOP	W/UTOP	U/UTOP	W/UTOP	U/UTOP	W/UTOP
0.240	0.6358	-0.1802	0.6518	-0.1865	0.6429	-0.1828	0.6665	-0.1975	0.6743	-0.1916
0.470	0.7245	-0.1627	0.7306	-0.1690	0.7272	-0.1627	0.7413	-0.1542	0.7513	-0.1698
0.970	0.8323	0.0312	0.8325	0.0291	0.8239	0.0228	0.8213	0.0183	0.8265	0.0118
1.470	0.9380	-0.1760	0.9288	-0.1755	0.9149	-0.1758	0.9067	-0.1779	0.9049	-0.1857
1.960	0.9964	-0.2129	0.9879	-0.2155	0.9686	-0.2126	0.9584	-0.2119	0.9512	-0.2111
2.330	1.0002	-0.1464	1.0005	-0.1530	0.9897	-0.1561	0.9867	-0.1593	0.9817	-0.1646
2.990	0.9866	-0.2382	0.9917	-0.2382	1.0055	-0.2148	1.0062	-0.2203	1.0087	-0.2199
3.490	0.9968	-0.1928	1.0010	-0.1798	0.9928	-0.1819	0.9941	-0.1902	0.9978	-0.1874
3.990	0.9952	-0.1566	0.9987	-0.1558	0.9924	-0.1612	0.9948	-0.1648	0.9903	-0.1698
4.960	1.0000	-0.1336	1.0000	-0.1399	1.0000	-0.1365	1.0000	-0.1437	1.0000	-0.1446

Table K-2. Continued.

F111/MAW BOUNDARY LAYER DATA, FLT 231										
Time	13:03:54.000		13:03:54.500		13:03:55.000		13:05:56.500		13:06:08.500	
	Camber	0/2	Camber	0/2	Camber	0/2	Camber	0/3	Camber	0/3
	QINF =	605.2	QINF =	596.6	QINF =	587.0	QINF =	599.7	QINF =	604.7
	MINF =	0.792	MINF =	0.787	MINF =	0.782	MINF =	0.801	MINF =	0.804
	ALPT =	8.66	ALPT =	8.59	ALPT =	8.75	ALPT =	3.98	ALPT =	3.98
	BETA =	0.51	BETA =	0.60	BETA =	0.51	BETA =	0.37	BETA =	0.34
	H =	11374.	H =	11455.	H =	11547.	H =	12185.	H =	12179.
	TINF =	26.2	TINF =	26.1	TINF =	25.7	TINF =	22.2	TINF =	21.7
	RNPU =	4.0E+06	RNPU =	4.0E+06	RNPU =	3.9E+06	RNPU =	3.9E+06	RNPU =	4.0E+06
	PSUR =	1346.9	PSUR =	1343.8	PSUR =	1337.3	PSUR =	1312.5	PSUR =	1314.7
	MTOP =	0.78	MTOP =	0.78	MTOP =	0.77	MTOP =	0.82	MTOP =	0.82
Y,in.	U/UTOP	W/UTOP	U/UTOP	W/UTOP	U/UTOP	W/UTOP	U/UTOP	W/UTOP	U/UTOP	W/UTOP
0.240	0.6785	-0.1847	0.6798	-0.1794	0.6755	-0.1845	0.6020	-0.1722	0.6064	-0.1641
0.470	0.7496	-0.1550	0.7455	-0.1659	0.7436	-0.1495	0.7117	-0.1449	0.7099	-0.1418
0.970	0.8096	0.0022	0.8106	0.0005	0.8090	-0.0027	0.8797	0.0842	0.8758	0.0811
1.470	0.8832	-0.1739	0.8887	-0.1689	0.8800	-0.1760	0.9869	-0.1527	0.9852	-0.1490
1.960	0.9235	-0.1938	0.9240	-0.2019	0.9213	-0.1997	1.0133	-0.1963	1.0116	-0.1944
2.330	0.9503	-0.1581	0.9517	-0.1561	0.9478	-0.1569	1.0032	-0.1188	0.9977	-0.1192
2.990	0.9877	-0.2149	0.9879	-0.2139	0.9848	-0.2128	1.0100	-0.1837	1.0056	-0.1888
3.490	0.9935	-0.1890	0.9957	-0.1904	0.9907	-0.1886	0.9971	-0.1358	0.9968	-0.1345
3.990	0.9967	-0.1644	1.0012	-0.1623	0.9996	-0.1631	1.0012	-0.1166	0.9973	-0.1174
4.960	1.0000	-0.1407	1.0000	-0.1447	1.0000	-0.1423	1.0000	-0.1035	1.0000	-0.1018

F111/MAW BOUNDARY LAYER DATA, FLT 231										
Time	13:06:22.000		13:06:58.000		13:06:59.500		13:07:01.000		13:07:02.500	
	Camber	0/3	Camber	0/2	Camber	0/2	Camber	0/2	Camber	0/2
	QINF =	600.1	QINF =	598.8	QINF =	602.6	QINF =	613.2	QINF =	624.8
	MINF =	0.801	MINF =	0.800	MINF =	0.801	MINF =	0.807	MINF =	0.813
	ALPT =	3.98	ALPT =	3.01	ALPT =	3.03	ALPT =	3.03	ALPT =	3.46
	BETA =	0.45	BETA =	0.40	BETA =	0.45	BETA =	0.57	BETA =	0.45
	H =	12174.	H =	12173.	H =	12110.	H =	12030.	H =	11907.
	TINF =	22.2	TINF =	22.0	TINF =	22.4	TINF =	23.0	TINF =	23.3
	RNPU =	4.0E+06	RNPU =	3.9E+06	RNPU =	4.0E+06	RNPU =	4.0E+06	RNPU =	4.0E+06
	PSUR =	1313.6	PSUR =	1325.6	PSUR =	1328.9	PSUR =	1335.4	PSUR =	1339.7
	MTOP =	0.82	MTOP =	0.81	MTOP =	0.81	MTOP =	0.81	MTOP =	0.82
Y,in.	U/UTOP	W/UTOP	U/UTOP	W/UTOP	U/UTOP	W/UTOP	U/UTOP	W/UTOP	U/UTOP	W/UTOP
0.240	0.5995	-0.1715	0.6367	-0.1517	0.6378	-0.1500	0.6394	-0.1552	0.6329	-0.1482
0.470	0.7049	-0.1426	0.7414	-0.1161	0.7465	-0.1127	0.7477	-0.1104	0.7331	-0.1174
0.970	0.8797	0.0810	0.9099	0.1062	0.9124	0.1069	0.9148	0.1091	0.9002	0.1048
1.470	0.9852	-0.1473	0.9952	-0.1222	0.9912	-0.1224	0.9983	-0.1240	0.9901	-0.1273
1.960	1.0131	-0.1956	1.0144	-0.1828	1.0122	-0.1852	1.0203	-0.1852	1.0119	-0.1859
2.330	0.9985	-0.1164	1.0025	-0.0962	0.9999	-0.0956	1.0070	-0.0953	1.0004	-0.0968
2.990	1.0093	-0.1879	1.0095	-0.1674	1.0064	-0.1690	1.0035	-0.1798	0.9878	-0.1928
3.490	0.9958	-0.1347	0.9947	-0.1087	0.9962	-0.1044	1.0040	-0.1234	0.9975	-0.1128
3.990	0.9999	-0.1124	1.0002	-0.0935	0.9942	-0.0933	0.9965	-0.0960	0.9971	-0.0989
4.960	1.0000	-0.1037	1.0000	-0.0818	1.0000	-0.0792	1.0000	-0.0858	1.0000	-0.0840

Table K-2. Continued.

F111/MAW BOUNDARY LAYER DATA, FLT 231										
Time	13:07:03.000		13:07:04.000		13:07:04.500		13:07:06.000		13:07:06.500	
	Camber	0/2	Camber	0/3	Camber	0/3	Camber	1/4	Camber	1/4
	QINF =	628.7	QINF =	635.2	QINF =	637.1	QINF =	634.7	QINF =	632.0
	MINF =	0.815	MINF =	0.817	MINF =	0.818	MINF =	0.815	MINF =	0.813
	ALPT =	3.95	ALPT =	5.04	ALPT =	5.50	ALPT =	6.39	ALPT =	6.62
	BETA =	0.40	BETA =	0.37	BETA =	0.48	BETA =	0.37	BETA =	0.34
	H =	11855.	H =	11749.	H =	11706.	H =	11614.	H =	11600.
	TINF =	23.0	TINF =	23.4	TINF =	23.6	TINF =	24.4	TINF =	24.0
	RNPU =	4.1E+06	RNPU =	4.1E+06	RNPU =	4.1E+06	RNPU =	4.1E+06	RNPU =	4.1E+06
	PSUR =	1337.3	PSUR =	1334.9	PSUR =	1331.5	PSUR =	1268.5	PSUR =	1240.8
	MTOP =	0.83	MTOP =	0.84	MTOP =	0.84	MTOP =	0.89	MTOP =	0.91
Y,in.	U/UTOP	W/UTOP	U/UTOP	W/UTOP	U/UTOP	W/UTOP	U/UTOP	W/UTOP	U/UTOP	W/UTOP
0.240	0.6271	-0.1549	0.5823	-0.1753	0.5543	-0.1879	0.6360	-0.2423	0.6784	-0.2457
0.470	0.7304	-0.1400	0.6861	-0.1616	0.6546	-0.1779	0.7081	-0.2109	0.7454	-0.2138
0.970	0.8914	0.0910	0.8525	0.0628	0.8280	0.0481	0.8135	0.0043	0.8230	-0.0111
1.470	0.9938	-0.1364	0.9770	-0.1651	0.9687	-0.1795	0.9247	-0.1993	0.9101	-0.1997
1.960	1.0143	-0.1912	1.0134	-0.2072	1.0165	-0.2149	0.9801	-0.2223	0.9581	-0.2121
2.330	0.9979	-0.1086	0.9926	-0.1382	1.0029	-0.1436	0.9941	-0.1710	0.9767	-0.1893
2.990	0.9852	-0.2033	0.9824	-0.2293	0.9877	-0.2442	0.9896	-0.2585	0.9989	-0.2333
3.490	0.9956	-0.1154	0.9985	-0.1553	0.9999	-0.1731	0.9969	-0.2199	0.9911	-0.2277
3.990	0.9993	-0.1056	0.9988	-0.1374	0.9980	-0.1566	0.9986	-0.1957	0.9927	-0.2079
4.960	1.0000	-0.0944	1.0000	-0.1175	1.0000	-0.1276	1.0000	-0.1611	1.0000	-0.1726

F111/MAW BOUNDARY LAYER DATA, FLT 231										
Time	13:07:09.000		13:07:09.500		13:07:10.500		13:07:11.500		13:08:43.500	
	Camber	2/5	Camber	2/5	Camber	2/5	Camber	2/5	Camber	0/3
	QINF =	608.7	QINF =	600.8	QINF =	581.0	QINF =	557.5	QINF =	609.1
	MINF =	0.800	MINF =	0.796	MINF =	0.786	MINF =	0.773	MINF =	0.805
	ALPT =	7.01	ALPT =	7.04	ALPT =	6.92	ALPT =	5.05	ALPT =	3.91
	BETA =	0.37	BETA =	0.40	BETA =	0.37	BETA =	0.34	BETA =	0.02
	H =	11769.	H =	11839.	H =	12022.	H =	12268.	H =	12071.
	TINF =	23.6	TINF =	23.5	TINF =	22.5	TINF =	22.1	TINF =	21.9
	RNPU =	4.0E+06	RNPU =	4.0E+06	RNPU =	3.9E+06	RNPU =	3.8E+06	RNPU =	4.0E+06
	PSUR =	1207.8	PSUR =	1188.2	PSUR =	1203.8	PSUR =	1273.8	PSUR =	1315.8
	MTOP =	0.91	MTOP =	0.91	MTOP =	0.89	MTOP =	0.82	MTOP =	0.83
Y,in.	U/UTOP	W/UTOP	U/UTOP	W/UTOP	U/UTOP	W/UTOP	U/UTOP	W/UTOP	U/UTOP	W/UTOP
0.240	0.6956	-0.2340	0.7050	-0.2282	0.7007	-0.2442	0.5069	-0.2126	0.5944	-0.1617
0.470	0.7547	-0.2021	0.7609	-0.1988	0.7632	-0.2163	0.6155	-0.2051	0.7010	-0.1414
0.970	0.8000	-0.0350	0.7925	-0.0405	0.8110	-0.0372	0.7996	0.0294	0.8793	0.0874
1.470	0.8708	-0.1953	0.8527	-0.1838	0.8907	-0.2085	0.9592	-0.1943	0.9833	-0.1421
1.960	0.9006	-0.2103	0.8745	-0.2013	0.9171	-0.2251	1.0090	-0.2205	1.0098	-0.1899
2.330	0.9338	-0.1818	0.9142	-0.1957	0.9453	-0.1817	0.9994	-0.1549	0.9986	-0.1090
2.990	0.9599	-0.2319	0.9469	-0.2170	0.9695	-0.2313	1.0083	-0.2198	1.0018	-0.1829
3.490	0.9650	-0.2407	0.9570	-0.2289	0.9722	-0.2536	0.9960	-0.2031	0.9942	-0.1235
3.990	0.9829	-0.2207	0.9799	-0.2001	0.9828	-0.2302	0.9954	-0.1749	0.9957	-0.1116
4.960	1.0000	-0.1859	1.0000	-0.1810	1.0000	-0.1860	1.0000	-0.1509	1.0000	-0.0912

Table K-2. Concluded.

F111/MAW BOUNDARY LAYER DATA, FLT 231										
Time	13:08:44.000		13:08:44.500		13:08:45.000		13:08:47.000		13:08:47.500	
	Camber	0/3	Camber	0/3	Camber	0/3	Camber	0/3	Camber	0/3
	QINF =	609.4	QINF =	610.1	QINF =	610.8	QINF =	613.3	QINF =	613.3
	MINF =	0.805	MINF =	0.806	MINF =	0.806	MINF =	0.807	MINF =	0.807
	ALPT =	3.99	ALPT =	3.95	ALPT =	4.07	ALPT =	4.66	ALPT =	4.85
	BETA =	-0.01	BETA =	-0.04	BETA =	-0.04	BETA =	-0.04	BETA =	-0.10
	H =	12060.	H =	12061.	H =	12050.	H =	12019.	H =	12008.
	TINF =	21.9	TINF =	21.8	TINF =	21.8	TINF =	21.7	TINF =	22.0
	RNPU =	4.0E+06	RNPU =	4.0E+06	RNPU =	4.0E+06	RNPU =	4.0E+06	RNPU =	4.0E+06
	PSUR =	1318.9	PSUR =	1318.9	PSUR =	1317.8	PSUR =	1312.3	PSUR =	1310.0
	MTOP =	0.83	MTOP =	0.83	MTOP =	0.83	MTOP =	0.83	MTOP =	0.83
Y,in.	U/UTOP	W/UTOP	U/UTOP	W/UTOP	U/UTOP	W/UTOP	U/UTOP	W/UTOP	U/UTOP	W/UTOP
0.240	0.5951	-0.1660	0.5942	-0.1699	0.5862	-0.1561	0.5657	-0.1758	0.5637	-0.1765
0.470	0.7021	-0.1347	0.7037	-0.1438	0.6990	-0.1414	0.6719	-0.1589	0.6706	-0.1675
0.970	0.8766	0.0858	0.8769	0.0850	0.8755	0.0824	0.8506	0.0647	0.8492	0.0612
1.470	0.9860	-0.1407	0.9847	-0.1427	0.9866	-0.1441	0.9787	-0.1638	0.9777	-0.1636
1.960	1.0123	-0.1924	1.0126	-0.1926	1.0123	-0.1927	1.0148	-0.2049	1.0146	-0.2046
2.330	0.9995	-0.1111	1.0010	-0.1108	1.0010	-0.1124	1.0034	-0.1307	1.0029	-0.1326
2.990	1.0022	-0.1884	1.0027	-0.1888	1.0015	-0.1889	1.0047	-0.2054	1.0047	-0.2062
3.490	0.9963	-0.1269	0.9976	-0.1245	0.9946	-0.1292	0.9986	-0.1555	0.9986	-0.1568
3.990	0.9987	-0.1092	1.0004	-0.1086	0.9969	-0.1134	0.9990	-0.1336	0.9978	-0.1353
4.960	1.0000	-0.0955	1.0000	-0.0991	1.0000	-0.0965	1.0000	-0.1157	1.0000	-0.1170

F111/MAW BOUNDARY LAYER DATA, FLT 231										
Time	13:08:48.000		13:08:49.500		13:08:50.500		13:09:02.000		13:09:02.500	
	Camber	0/3	Camber	1/4	Camber	1/4	Camber	1/4	Camber	1/4
	QINF =	613.0	QINF =	611.4	QINF =	610.5	QINF =	628.9	QINF =	629.4
	MINF =	0.807	MINF =	0.805	MINF =	0.804	MINF =	0.801	MINF =	0.800
	ALPT =	5.16	ALPT =	5.86	ALPT =	6.04	ALPT =	5.09	ALPT =	4.77
	BETA =	0.05	BETA =	-0.07	BETA =	-0.24	BETA =	0.60	BETA =	0.37
	H =	11996.	H =	11961.	H =	11949.	H =	10960.	H =	10927.
	TINF =	22.1	TINF =	22.3	TINF =	22.7	TINF =	25.0	TINF =	25.0
	RNPU =	4.0E+06	RNPU =	4.0E+06	RNPU =	4.0E+06	RNPU =	4.1E+06	RNPU =	4.1E+06
	PSUR =	1312.1	PSUR =	1237.1	PSUR =	1248.1	PSUR =	1362.0	PSUR =	1365.3
	MTOP =	0.84	MTOP =	0.90	MTOP =	0.89	MTOP =	0.83	MTOP =	0.83
Y,in.	U/UTOP	W/UTOP	U/UTOP	W/UTOP	U/UTOP	W/UTOP	U/UTOP	W/UTOP	U/UTOP	W/UTOP
0.240	0.5570	-0.1772	0.6379	-0.2534	0.6201	-0.2398	0.5455	-0.1963	0.5500	-0.1833
0.470	0.6582	-0.1711	0.7074	-0.2129	0.6840	-0.2071	0.6542	-0.1881	0.6546	-0.1795
0.970	0.8387	0.0525	0.8214	0.0133	0.8062	0.0073	0.8318	0.0454	0.8374	0.0536
1.470	0.9707	-0.1698	0.9424	-0.1917	0.9336	-0.1885	0.9726	-0.1837	0.9761	-0.1770
1.960	1.0118	-0.2107	0.9966	-0.2159	0.9902	-0.2198	1.0150	-0.2166	1.0146	-0.2141
2.330	0.9989	-0.1383	0.9964	-0.1591	0.9898	-0.1585	1.0021	-0.1487	1.0016	-0.1442
2.990	1.0018	-0.2072	1.0068	-0.2218	1.0017	-0.2230	0.9992	-0.2282	0.9978	-0.2212
3.490	0.9957	-0.1722	0.9973	-0.2090	0.9916	-0.2060	0.9995	-0.1779	0.9975	-0.1700
3.990	0.9924	-0.1457	0.9985	-0.1771	0.9951	-0.1721	0.9983	-0.1580	0.9974	-0.1513
4.960	1.0000	-0.1141	1.0000	-0.1514	1.0000	-0.1495	1.0000	-0.1332	1.0000	-0.1277

REFERENCES

[1] Painter, Weneth D. and Lawrence J. Caw, *Design and Physical Characteristics of the Transonic Aircraft Technology (TACT) Research Aircraft*, NASA-TM-56048, Jan. 1979.

[2] Symposium on Transonic Aircraft Technology (TACT). AFFDL-TR-78-100, Aug. 1978.

[3] *Supercritical Wing Technology: A Progress Report on Flight Evaluations*, NASA-SP-301, Feb. 1972.

[4] Ayers, Theodore G. and James B. Hallissy, *Historical Background and Design Evolution of the Transonic Aircraft Technology Supercritical Wing*, NASA-TM-81365, Aug. 1981.

[5] Compiled by Powers, Sheryll Goecke, *Advanced Fighter Technology Integration F-111 Mission Adaptive Wing*, NASA-CP-3055, 1990.

[6] Gould, D. K., *Boeing Pre-Design of AFTI-111 Mission Adaptive Wing, Volume II - Aerodynamic Trade Studies, Theoretical Calculations and Wind Tunnel Tests*, AFFDL-TR-73, June 1978.

[7] Nelson, D. W. and G. R. Letsinger, "AFTI-F-111 Mission Adaptive Wing Wind Tunnel Analysis Report," AEDC PWT-16T, test no. 550, Boeing D365-10058-1, rev. A, Apr. 1981.

[8] Hall, Joseph M., "AFTI/F-111 Flight Control System," AFWAL-TR-87-3012, 1987.

[9] Steers, Louis L. and Paul R. Bussing, *Flight Demonstration and Research of the Smooth Variable-Camber Wing, Advanced Fighter Technology Integration F-111 Mission Adaptive Wing*, NASA-CP-3055, 1990.

[10] Bonnema, Kenneth L. and William A. Lokos, "AFTI/F-111 Mission Adaptive Wing Flight Test Instrumentation Overview," paper no. 89-0084, 35th International Instrumentation Symposium, Orlando, Florida, May 1989.

[11] Webb, Lannie D., William E. McCain, and Lucinda A. Rose, *Measured and Predicted Pressure Distributions on the AFTI/F-111 Mission Adaptive Wing*, NASA-TM-100443, Nov. 1988.

[12] Powers, Sheryll Goecke, Lannie D. Webb, Edward L. Friend, and William A. Lokos, *Flight Test Results From a Supercritical Mission Adaptive Wing With Smooth Variable Camber*, NASA-TM-4415, Nov. 1992.

[13] Friend, Edward L., "Flight Buffet Characteristics of a Smooth Variable-Camber Mission Adaptive Wing for Selected Wing Flap Deflections," *The Advanced Fighter Technology Integration AFTI/F-111 Airplane*, NASA-TM-4455, Feb. 1993.

[14] Wong, Kent J., *AFTI/F-111 Mission Adaptive Wing Lift and Drag Results*, Air Force Flight Test Center, Edwards AFB, California, AFFTC TR-87-02, Apr. 1987.

[15] Phillips, Paul W. and Stephen B. Smith, *AFTI/F-111 Mission Adaptive Wing (MAW) Automatic Flight Control System Modes Lift and Drag Characteristics*, AFFTC-TR-89-03, May 1989.

[16] McCain, William E., "Comparison of Two Predication Methods with Flight-Measured Wing Surface Pressure Distributions from the Mission Adaptive Wing," *Advanced Fighter Technology Integration F-111 Mission Adaptive Wing*, NASA-CP-3055, 1990.

[17] Fehl, John E., *AFTI/F-111 Mission Adaptive Wing 1/12 Scale Wind Tunnel Model Inspection*, AFWAL-TM-80-114-FIMS, Dec. 1980.

[18] Gould, Douglas K., *AFTI/F-111 Mission Adaptive Wing, Advanced Fighter Technology Integration F-111 Mission Adaptive Wing*, NASA-CP-3055, 1990.

[19] Bussing, P. R., *AFTI F-111 Final Instrumentation Report*, Boeing Document no. D365-10016-2, 1984.

[20] Dudzinski, Thomas J. and Lloyd N. Krause, *Flow-Direction Measurement with Fixed-Position Probes*, NASA-TM-X-1904, Oct. 1969.

[21] DeAngelis, V. Michael, *In-Flight Deflection Measurement of the HiMAT Aeroelastically Tailored Wing*, AIAA-81-2450, Nov. 1981.

[22] Lokos, William A., *Predicted and Measured In-Flight Wing Deflections of a Forward-Swept-Wing Aircraft*, NASA-TM-4245, 1990.

[23] DeAngelis, V. Michael, and Robert Fodale, "Electro-Optical Flight Deflection Measurement System," *SFTE 18th Annual Symposium Proceedings*, SFTE Technical Paper 22, Sept. 1987.

[24] Webb, Lannie D. and Harold P. Washington, *Flight Calibration of Compensated and Uncompensated Pitot-Static Airspeed Probes and Application of the Probes to Supersonic Cruise Vehicles*, NASA-TN-D-6827, May 1972.

[25] Sakamoto, Glenn M., *Aerodynamic Characteristics a Vane Flow Angularity Sensor System Capable of Measuring Flight Path Accelerations for the Mach Number Range From 0.40 to 2.54*, NASA-TN-D-8242, 1972.

[26] Beers, Yardley, *Introduction to the Theory of Error*, Addison-Wesley Publishing Co., Inc., 1957.

[27] Webb, Lannie D., Sheryll Goecke Powers, and Lucinda A. Rose, *Selected Local Flow-Field Measurements on the Advanced Fighter Technology Integration (AFTI)/F-111 Aircraft Mission Adaptive Wing*, NASA-TM-4405, 1992. (Also published in, *Advanced Fighter Technology Integration F-111 Mission Adaptive Wing*, NASA-CP-3055, 1990.)

[28] Montoya, Lawrence C. and Richard D. Banner, *F-8 Supercritical Wing Flight Pressure, Boundary-layer, and Wake Measurements and Comparisons With Wind Tunnel Data*, NASA-TM-X-3544, 1977.

[29] Friend, Edward L. and Jeffrey M. Thompson, *Buffet Characteristics of the Advanced Fighter Technology Integration AFTI/F-111 Airplane with the Mission Adaptive Wing*, NASA-CP-3055, 1990.

[30] Smith, Stephen B. and Kent Wong, "Lift and Drag Characteristics of the AFTI/F-111 in the Manual Mode," *Advanced Fighter Technology Integration AFTI/F-111 Airplane with the Mission Adaptive Wing*, NASA-CP-3055, 1990.

[31] Phillips, Paul W. "Lift and Drag Characteristics of the AFTI/F-111 With the MAW Automatic Control Modes," *Advanced Fighter Technology Integration AFTI/F-111 Airplane with the Mission Adaptive Wing*, NASA-CP-3055, 1990.

[32] Nelson, David W., *AFTI/F-111 Aerodynamics Final Report*, D365-10110-1, Boeing, Feb. 1987.

REPORT DOCUMENTATION PAGE

Form Approved
OMB No. 0704-0188

Public reporting burden for this collection of information is estimated to average 1 hour per response, including the time for reviewing instructions, searching existing data sources, gathering and maintaining the data needed, and completing and reviewing the collection of information. Send comments regarding this burden estimate or any other aspect of this collection of information, including suggestions for reducing this burden, to Washington Headquarters Services, Directorate for Information Operations and Reports, 1215 Jefferson Davis Highway, Suite 1204, Arlington, VA 22202-4302, and to the Office of Management and Budget, Paperwork Reduction Project (0704-0188), Washington, DC 20503.

1. AGENCY USE ONLY (Leave blank)

2. REPORT DATE
June 1997

3. REPORT TYPE AND DATES COVERED
Technical Memorandum

4. TITLE AND SUBTITLE
Flight Wing Surface Pressure and Boundary-Layer Data Report from the F-111 Smooth Variable-Camber Supercritical Mission Adaptive Wing

5. FUNDING NUMBERS
WU 953-36-00

6. AUTHOR(S)
Sheryll Goecke Powers and Lannie D. Webb

7. PERFORMING ORGANIZATION NAME(S) AND ADDRESS(ES)
NASA Dryden Flight Research Center
P.O. Box 273
Edwards, California 93523-0273

8. PERFORMING ORGANIZATION REPORT NUMBER
H-2102

9. SPONSORING/MONOTORING AGENCY NAME(S) AND ADDRESS(ES)
National Aeronautics and Space Administration
Washington, DC 20546-0001

10. SPONSORING/MONITORING AGENCY REPORT NUMBER
NASA TM-4789

11. SUPPLEMENTARY NOTES

12a. DISTRIBUTION/AVAILABILITY STATEMENT
Unclassified—Unlimited
Subject Category 02

12b. DISTRIBUTION CODE

13. ABSTRACT (Maximum 200 words)

Flight tests were conducted using the advanced fighter technology integration F-111 (AFTI/F-111) aircraft modified with a variable-sweep supercritical mission adaptive wing (MAW). The MAW leading- and trailing-edge variable-camber surfaces were deflected in flight to provide a near-ideal wing camber shape for the flight condition. The MAW features smooth, flexible upper surfaces and fully enclosed lower surfaces, which distinguishes it from conventional flaps that have discontinuous surfaces and exposed or semi-exposed mechanisms. Upper and lower surface wing pressure distributions were measured along four streamwise rows on the right wing for cruise, maneuvering, and landing configurations. Boundary-layer measurements were obtained near the trailing edge for one of the rows. Cruise and maneuvering wing leading-edge sweeps were 26° for Mach numbers less than 1 and 45° or 58° for Mach numbers greater than 1. The landing wing sweep was 9° or 16°. Mach numbers ranged from 0.27 to 1.41, angles of attack from 2° to 13°, and Reynolds number per unit foot from 1.4×10^6 to 6.5×10^6. Leading-edge cambers ranged from 0° to 20° down, and trailing-edge cambers ranged from 1° up to 19° down. Wing deflection data for a Mach number of 0.85 are shown for three cambers. Wing pressure and boundary-layer data are given. Selected data comparisons are shown. Measured wing coordinates are given for three streamwise semispan locations for cruise camber and one spanwise location for maneuver camber.

14. SUBJECT TERMS
Boundary layers, Pressure distributions, Smooth variable camber, Supercritical wing

15. NUMBER OF PAGES
862

16. PRICE CODE
A99

17. SECURITY CLASSIFICATION OF REPORT	18. SECURITY CLASSIFICATION OF THIS PAGE	19. SECURITY CLASSIFICATION OF ABSTRACT	20. LIMITATION OF ABSTRACT
Unclassified	Unclassified	Unclassified	Unlimited